Refer to Photon Sources Directorate procedure "Design Reviews" in the Photon Sciences Document Center for complete details and requirements for completing design reviews. Contact the PSD Quality Representative for further guidance.

PHOTON SCIENCES DIRECTORATE
BROOKHAVEN NATIONAL LABORATORY

Report No. PS-DRR-1060
(Obtain from Quality Group)

DESIGN REVIEW REPORT

EDP Report No. (if applicable)

The Design Review Report shall include at a minimum:

- The title of the item or system;
- A description of the item;
- Design Review Report Number;
- The ESH&Q risk level;
- The design parameters;
- The type of design review;
- The date of the review;
- The names and association of the reviewers;
- The major comments and concerns of the reviewers;
- Any reference not appearing in the EDP used to support the design during the Design Review meeting;

TYPE OF REVIEW:

☐ **INITIAL** ☐ **INTERMEDIATE** ☒ **FINAL**

Prepared By:
S. Sherwood

Review Date: 5/26/17

TITLE of ITEM/SYSTEM: 18-ID (FXI) TXM Endstation Final Design Review

PRESENTED BY: Wah-Keat Lee (FXI Beamline Scientist) and Scott Coburn (FXI Beamline - Mechanical Engineer)

ESH&Q Risk Level: **A-2**
(Application of the Graded Approach Table)

PURPOSE/DESCRIPTION:
This is a final design review for the 18-ID (FXI) TXM Endstation which will be the primary endstation used at FXI.

REVIEWERS - ASSOCIATION: S. Sherwood (Chair), Y. Chu (Science), E. Nazaretski (Science), B. Heneveld (ESH), M. Carlucci-Dayton (Engineer), D. Bacescu (Engineer), J. Zipper (QA)
Attendees: D. Bacescu, M. Carlucci-Dayton, S. Coburn, M. Gaffney, K. Gofron (Call-in), W. Keat-Lee, S. Moss, E. Nazaretski, S. Sherwood, C. Stebbins, L. Stiegler, Z. Yin, J. Zipper

DISTRIBUTION:
All reviewers and presenters.

Attachments: ☐ **Data Sheets** ☐ **Calculations (Checked and countersigned)** ☒ **Support documentation**
☐ **See Continuation Page** ☐ **Design Checklist**

MAJOR COMMENTS & CONCERNS OF REVIEWERS

Refer to attached documentation for details of the topics discussed.

An overview was provided by Wah-Keat explaining the details of the beamline and an outline of the details to be presented. The Full Field X-ray Imaging (FXI) beamline is a hard X-ray damping wiggler beamline which will operate in the 5-11 keV energy range with 30 nm resolution. The Transmission X-ray Microscope (TXM) will be the main endstation and can be considered an X-ray version of an optical microscope. With X-rays this endstation allows for science capabilities of studying the details of structures of geological media, biomasses, nanoporous alloys and biomaterials.

The original plan was to use a TXM from NSLS that was bought in 2009. However, disadvantages with this system would limit science capabilities and a decision between the beamline team and NSLS-II management was made to build a custom TXM.

The status of the beamline construction was presented. The PDS is ~80% installed and expected to be completed in July. 75% of the TXM parts have been delivered and assembly is ongoing. The IRR is scheduled for October 2017. This TXM is part of the IRR.

Scott provided an overview of the TXM endstation design. The endstation consists of an SSA, a sample station, and two detector stations which are identical to one another.

SSA

The SSA is housed within a polycarbonate box in which is a helium environment, and consists of a set of JJ X-ray 4 blade slit apertures, a diffuser, an attenuator (XIA, 4 actuators), and ion chamber.

The stand for the SSA station has been changed from the PDR and is more ridged. Recommendation: Perform analysis on the current frame or design a frame that is more rigid for the SSA assembly.

Action: Consult with the Fire Protection safety group to ensure the poly-carbonate covers the weight do not exceed the flammability loads of the hutch.

Detector Station Modules

The detector stations A and B are interchangeable detector modules. 1.1 m of large manual Z travel. Decision to have manual travel was based on cost. Smaller range of Z motion is to find focus of microscope.

The long manual Z rails are attached to the granite directly. A locking mechanism will be designed into the system.

Sample Station

The sample station has a rotation stage for the sample that is critical. An air bearing is being used for this translation.

The optical layout of the sample station was presented. The optical layout from upstream to downstream consists of a condenser and beam stop, a pinhole, the sample holder, a zoneplate, phase ring and Bertrand lens.

The sample mount will be a standard off the shelf Newport magnetic kinematic base allowing samples from HXN and SRX to be mounted.

Utilities – The air bearing requires an ideal 90 psi capacity that will be accomplished using high capacity compressed air.

Be Window Interface

In order to interface with the Be window upstream a cover fully encloses the Be window. Action: Pressure test reports from manufacturer should be obtained and sent to BNL pressure safety SME to verify adequate testing of the Be window.

General Notes and Recommendations

The flight paths will be supplied helium via a helium gas cylinder regulated down. One cylinder/regulator will be used to feed all flight paths.

PRV's will be placed at the regulator output line and on each helium optics enclosure. Action: Send cut-sheet for PRV's and regulator to pressure safety SME for approval.

It was noted that if polycarbonate covers need to be removed frequently may want to consider staging area to place them. These will be removed very infrequently.

It was noted that objects will fall into space around sample holder stage cutout hole. There is a clean out space and the 18-ID team is aware of this potential issue. If it is an issue in the future it may be looked at again.

Work platforms are used for access to the sample and detector stations. Action: Place load rating capacity on work platforms.

Of the 7 recommendations resulting from the PDR 5 have been implemented. Scott noted the 2 remaining recommendations and his thoughts:

> PDR recommendation 3: Consider putting a door on the detector chambers to allow for adjustment of the manual stage. Status: Not done. Concern is complexity of the enclosure and additional He leak potential.
>
> PDR recommendation 5: Add handle to allow easy manual adjustment for moving the carriage assembly. Status: Not done but reconsidering.

ESH:

QA:
All QA concerns are addressed in the body of the report.

USI:
USI Screening has been determined to be Negative.

Actions resulting from this review have been identified within the body of this report and will be included in the NSLS-II Family ATS.

Action Item 1: Consult with the Fire Protection safety group to ensure the poly-carbonate covers the weight do not exceed the flammability loads of the hutch.

Action Item 2: Pressure test reports from manufacturer should be obtained and sent to BNL pressure safety SME to verify adequate testing of the Be window.

Action Item 3: Send cut-sheet for PRV's and regulator to pressure safety SME for approval.

Action Item 4: Place load rating capacity on work platforms.

REVIEWED DRAWINGS / SPECIFICATIONS

Presentation Material:

- Powerpoint –FXI-TXM-FDR-20170525-00

APPROVAL:

Review Committee Chairperson: S. Sherwood

Please forward completed original to the PSD Quality Assurance Group.

6/9/2017

X

Stephen Sherwood
Research Operations Support Engineer
Signed by: Sherwood, Stephen

Sherwood, Stephen

Subject:	FXI Transmission X-ray Microscope- Final Design Review
Location:	Bldg. 744 Rm 177
Start:	Fri 5/26/2017 1:00 PM
End:	Fri 5/26/2017 3:00 PM
Recurrence:	(none)
Meeting Status:	Meeting organizer
Organizer:	Sherwood, Stephen
Required Attendees:	Yin, Zhijian; Stebbins, Christopher; Adams, Julian; Nazaretski, Evgeny; Gaffney, Michael; Coburn, David Scott; Bacescu, Daniel; Buckley, Michael; Carlucci-Dayton, Mary; Lee, Wah-Keat; Verbeeck, Linda; Chu, Yong; Zipper, Joseph; Gofron, Kazimierz; Moss, Steven H; Stiegler, Lori
Resources:	Bldg. 744 Rm 177

You are invited to a FDR for the FXI (18-ID) Transmission X-ray Microscope (TXM). Please let me know if you are not able to attend the review please let me know and advise of a potential delegate.

Additional supporting documents will be provided to you prior to the review.

Review Panel:
S. Sherwood (Chair)
Evgeny Nazaretski (Science)
Mary Carlucci-Dayton (Engineering)
Daniel Bacescu (Engineering)
Lori Stiegler (ESH)
Joseph Zipper (QA)

18-ID (FXI) TXM Endstation Final Design Review
– Attendance Sheet

Date: May 26th, 2016

Name	Title	Department/Division or Company
Steven H Moss	ABM-NSLS-II	RCD/NSLS-II
STEPHEN SHERWOOD	ROS ENGINEER	NSLS-II
WAH-KEAT LEE	Beamline lead	NSLS-II
DAVID SCOTT COBURN	ENGINEER	NSLS2
DANIEL BACESCU	ENG	NSLS2
Evgeny Wezenetsch	Scientist	NSLS-II
JOE ZIPPOR	QA	NSLS II
Mary Carlucci-Dayton	EGL	NSLS-II
Zhejian Yin (ZY)	3 18	NSLS-II
Lori Stiegler	ESH	HP
Michael Gaffney	Safety Eng	HP
Chris Stebbins	Liaison Engr.	PSD.

FXI TXM FDR

Full-Field X-ray Imaging (FXI, 18id) Beamline
Transmission X-ray Microscope (TXM)
Final Design Review
26 May 2017

Wah-Keat Lee
Lead Beamline Scientist

David Scott Coburn
Beamline Engineer

Outline

- Overview
- Optical Layout
- Secondary Source Aperture (SSA)
- Detector Stations
- Sample Station
- Sample Mounts
- Utilities
- ESH

Technical goal for FXI Beamline

- FXI is a hard x-ray microscopy beamline that will provide a state-of-the-art implementation of a 30 nanometer resolution, high speed transmission x-ray microscope (TXM).
- Designed for XANES imaging,
- Precise metrology system for automated tomography and interior tomography.

TECHNIQUE(S):

Transmission X-ray Microscopy (TXM) with absorption or phase contrast

SOURCE:

Damping wiggler, 1.85 T, 10 cm period

ENERGY RANGE:

5-11 keV

SPATIAL RESOLUTION:

30 nm

Beamline Schematic

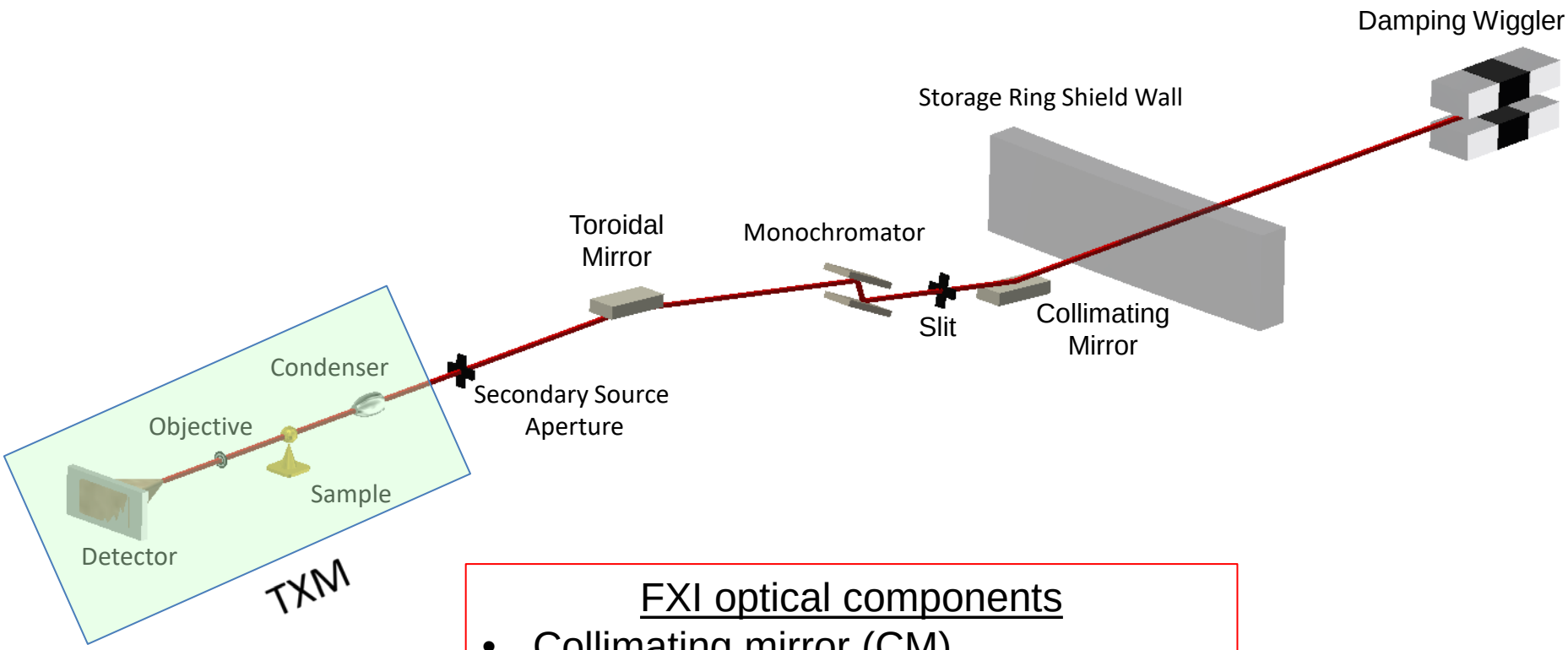

FXI optical components

- Collimating mirror (CM)
- Double crystal monochromator (DCM)
- Toroidal mirror (TM)

TXM fundamentals

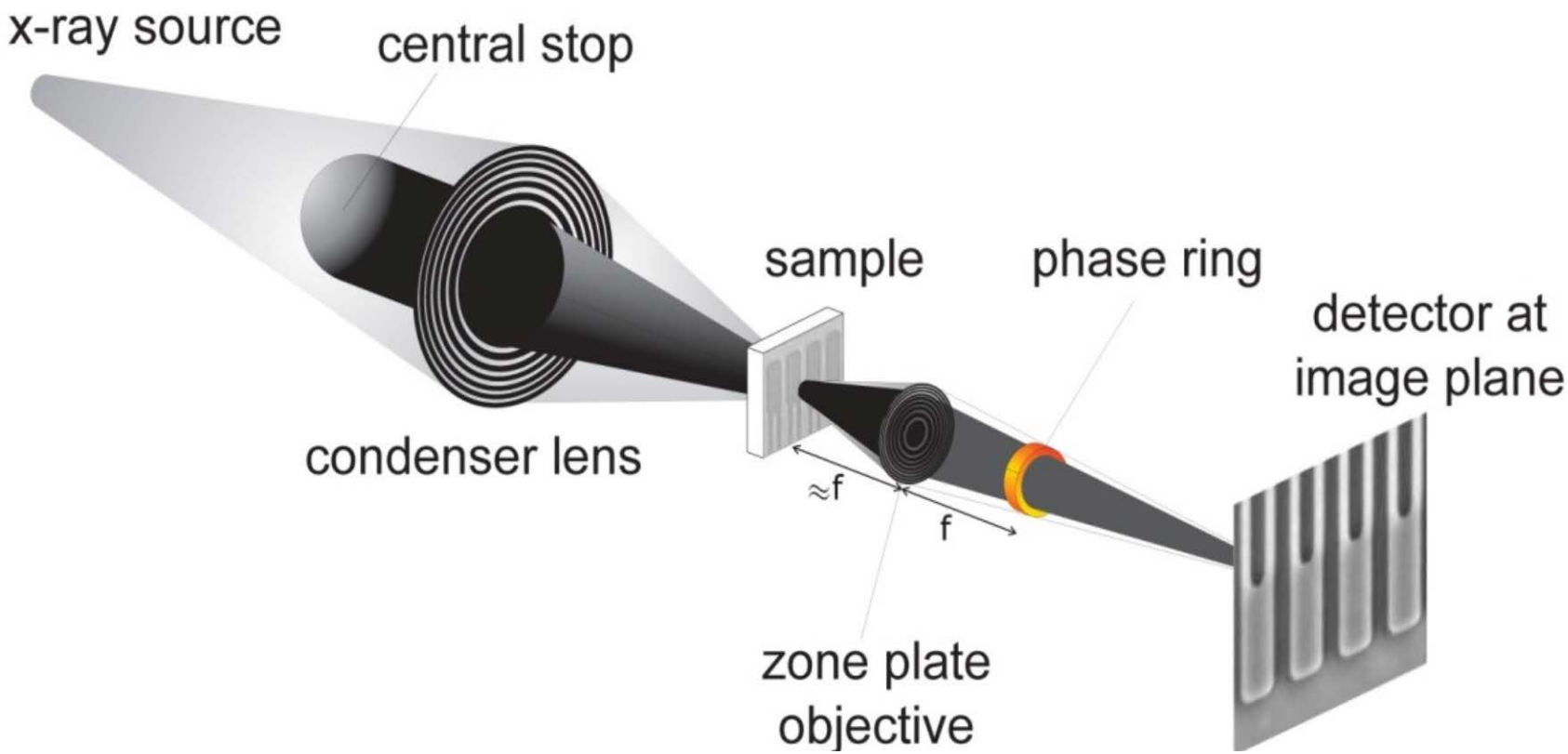

Schematic of a Transmission X-ray Microscope: X-ray version of optical microscope

Science applications

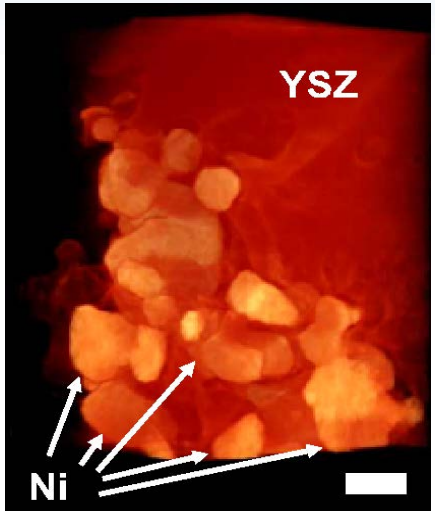

SOFC electrodes

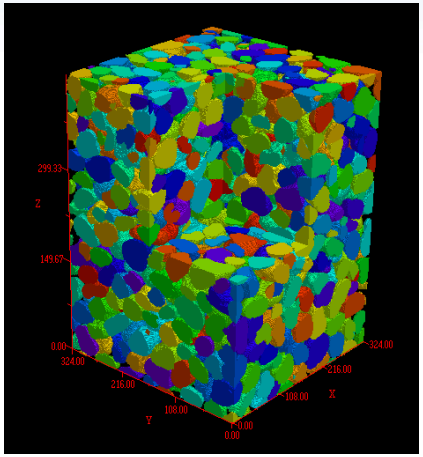

Geological porous media

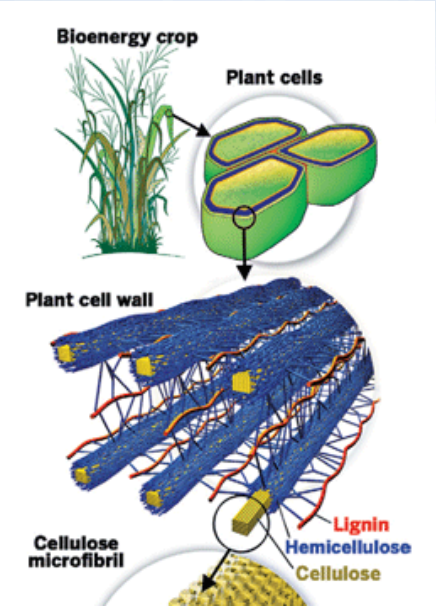

Structure of biomass

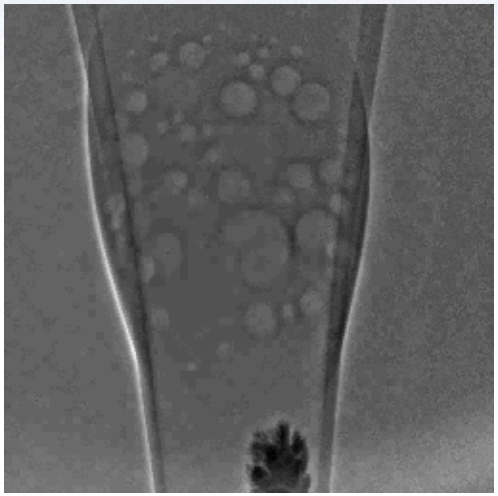

In-situ electrochemistry

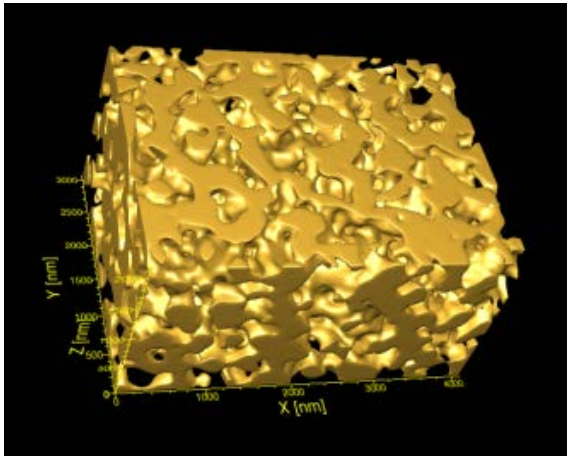

Nanoporous alloys

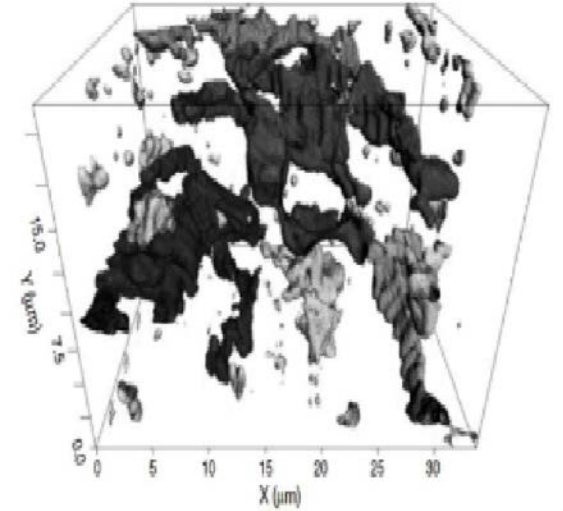

FeNiS under high T and P

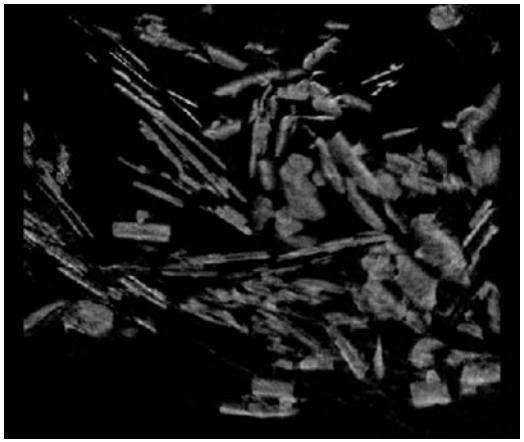

Biomaterials for bone scaffold

TXM instrument at NSLS

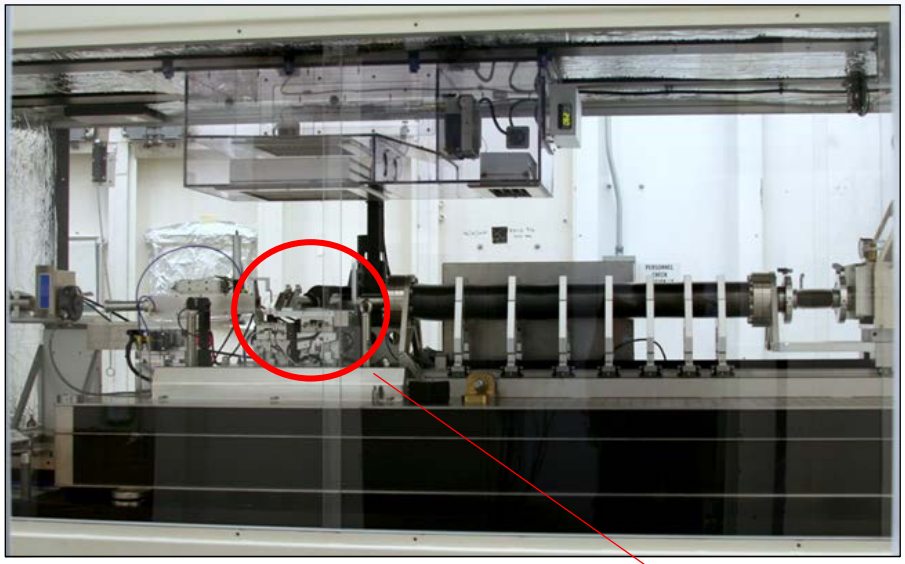

TXM
DOE ARRA funds 2009
Built by XRADIA
Delivered Dec 2010 to X8C NSLS
Start NSLS user operation 2012

Specifications
5-11 keV
Absorption & Zernike phase contrast
30 nm spatial resolution
20-50 um field of view

Original plan: Use the existing Xradia TXM at FXI

Disadvantages:

- Xradia TXM is a turn-key instrument – not a platform for long term advances and improvements.
- Xradia TXM has very limiting space restrictions – not appropriate for in-situ/in-operando dynamics studies, which are the most exciting scientific areas.
- Xradia TXM does not allow for high frame rate data acquisition – needed for dynamics
- Xradia TXM control/data software is proprietary and not compatible with NSLS-II DAMA platform.

A decision was made, with management approval, to build our own TXM that addresses the above issues.

FXI Status

- Hutches (FOE and Endstation) completed.
- Beamline Photon Delivery System 80% installed; technical issues with mirrors. Expect installation completion in July 2017.
- Mechanical & electrical complete.
- PPS & EPS in progress. Critical path.
- Beamline front-end in progress. Critical path.
- Beamline controls in progress. Near critical path.
- TXM 75% parts received. Assembly beginning.
- FXI beamline IRR scheduled for mid October 2017.

TXM Overview

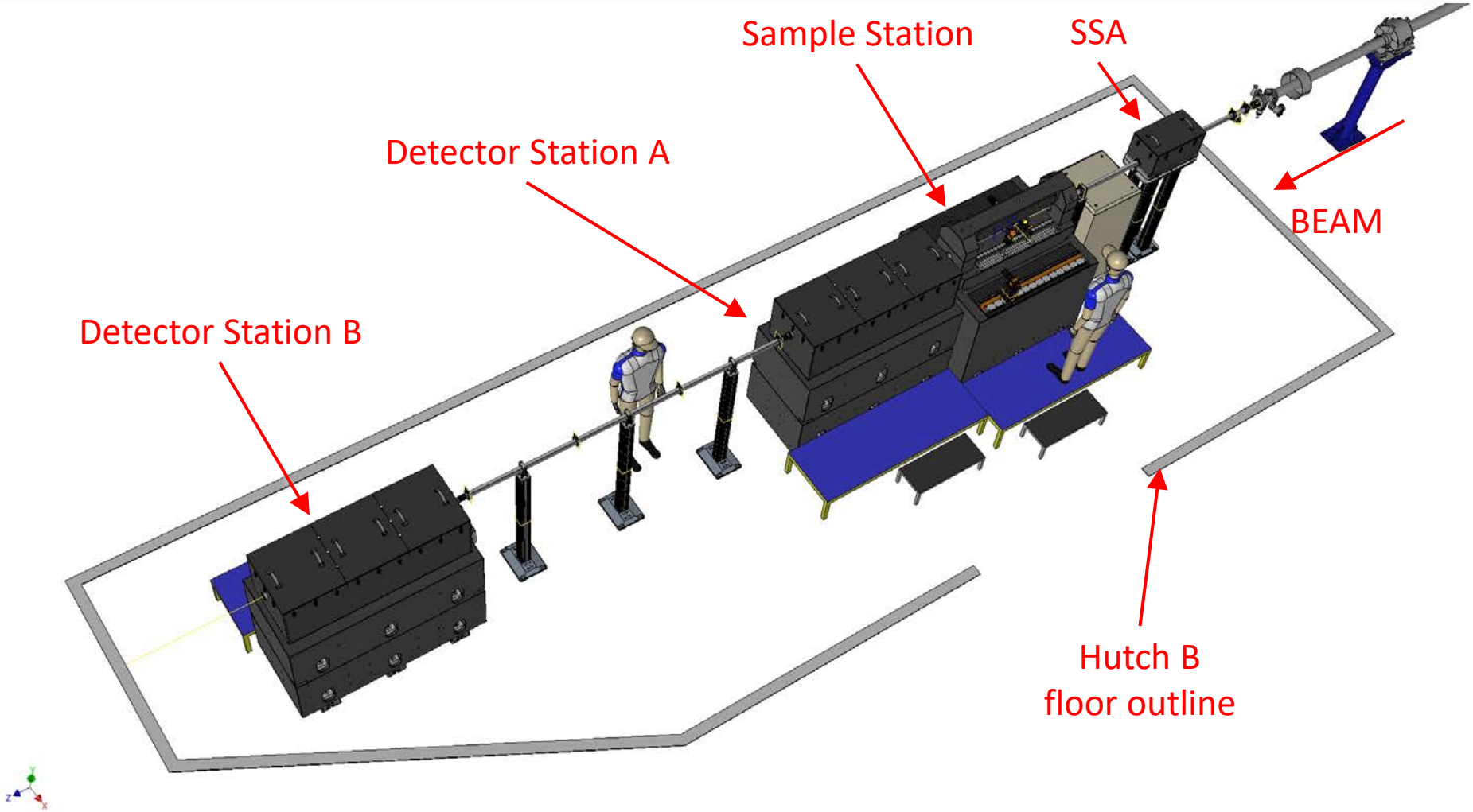

Granite Installation

SSA Station

- Secondary Source Aperture (JJ-Xray 4-blade slits)
- Diffuser (spinning paper disk)
- Attenuator (XIA, 4 actuators)
- Ion Chamber (ADC from Xradia TXM, not shown)
- Helium enclosure with top cover, electrical feedthroughs, pressure relief valve
- KF50 ports for flight path tubes

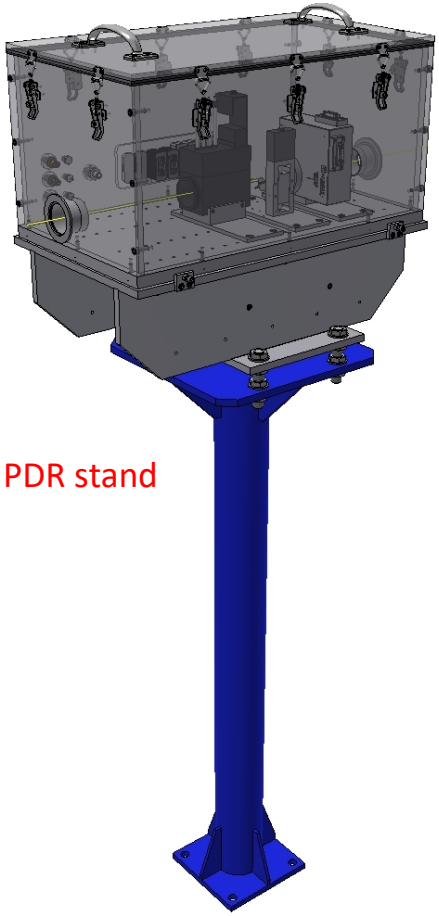

Detector Stations

- Two identical detector stations: A (upstream) and B (downstream)
- Interchangeable Detector Modules
- 1.1 m of manual Z travel
- Helium enclosure with top covers, electrical feedthroughs, pressure relief valve
- KF50 ports for flight path tubes

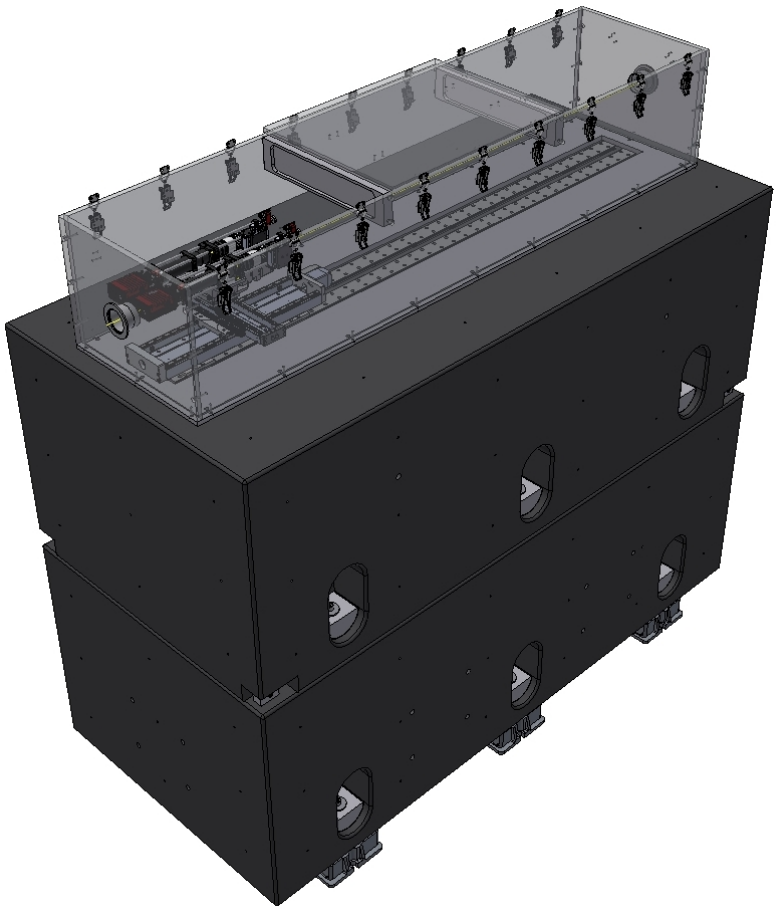

Sample Station

- Xradia optics used for Day 1
- Sample air-bearing rotation stage
- Piezo (Attocube) positioning stages for optics
- Sample visible light microscope
- Optics alignment microscope
- Telescoping helium flight paths

Optical Layout

Xradia optics to be used on Day 1.

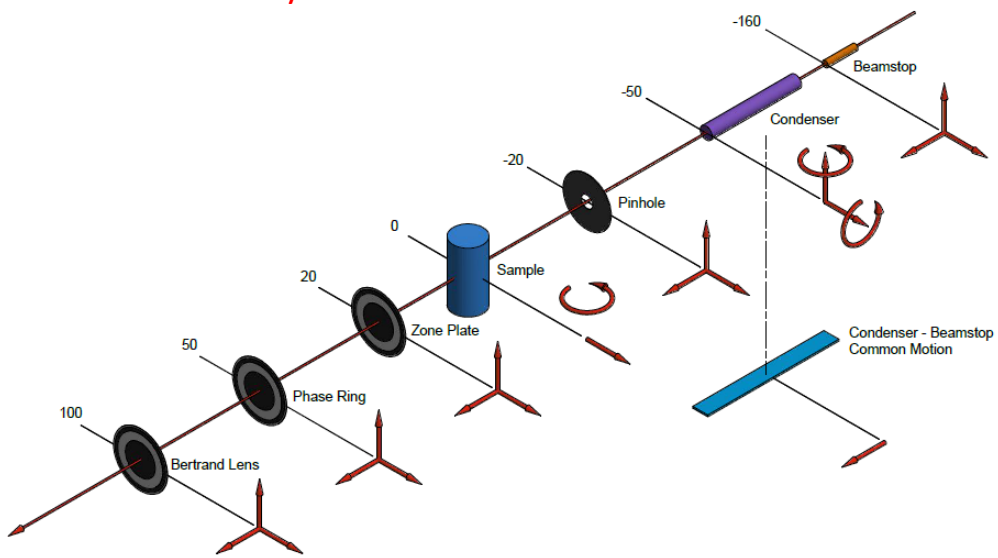

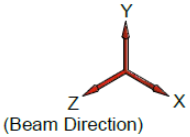

NOTES:
1. Detector system not shown.
2. Sample local XYZ motions not shown.
3. Condenser XY scanning motions not shown.

UNLESS OTHERWISE SPECIFIED
ALL DIMENSIONS ARE IN MILLIMETERS
DIMENSIONS IN BRACKETS [xx.xx] (WHERE PRESENT) ARE INCHES AND ARE FOR REFERENCE ONLY
INTERPRET DRAWING AS PER ASME Y14.5-1994 OR Y32.2-1975

DIMENSIONAL TOLERANCES	ANGULAR TOLERANCE
X. ± 1.500	± .5°
.X ± 0.750	
.XX ± 0.400	FINISH 3.2
.XXX ± 0.120	

BREAK EDGES & SHARP CORNERS 0.120 MIN. TO 0.750 MAX

BROOKHAVEN NATIONAL LABORATORY
BROOKHAVEN NATIONAL LABORATORY
BROOKHAVEN SCIENCE ASSOCIATES
UPTON, NEW YORK 11973
Exploring Life's Mysteries, Protecting its Future

NSLS II NATIONAL SYNCHROTRON LIGHT SOURCE II

DRAWN BY	Coburn	04 Apr 2016
CHECKED BY		
VACUUM APPROVAL		
ENGINEER APPROVAL		
SUPERVISOR APPROVAL		
ES&H APPROVAL		
QA APPROVAL		

PHOTON DIVISION
FXI BEAMLINE
FXI TXM Optical Layout

B — SHEET SIZE
FXI-TXM-OpticalLayout — DRAWING/PART NUMBER
1 — REVISION

NEXT ASSY:
PROJECT:
THIRD ANGLE PROJECTION
SCALE: SEE DWG VIEW
WBS#
ESH&Q RISK LEVEL
SHEET 1 OF 1

D:\Mech-Eng\LT\PD\FXI\TXM\Optical Layout\FXI-TXM-OpticalLayout.idw

Optical Layout

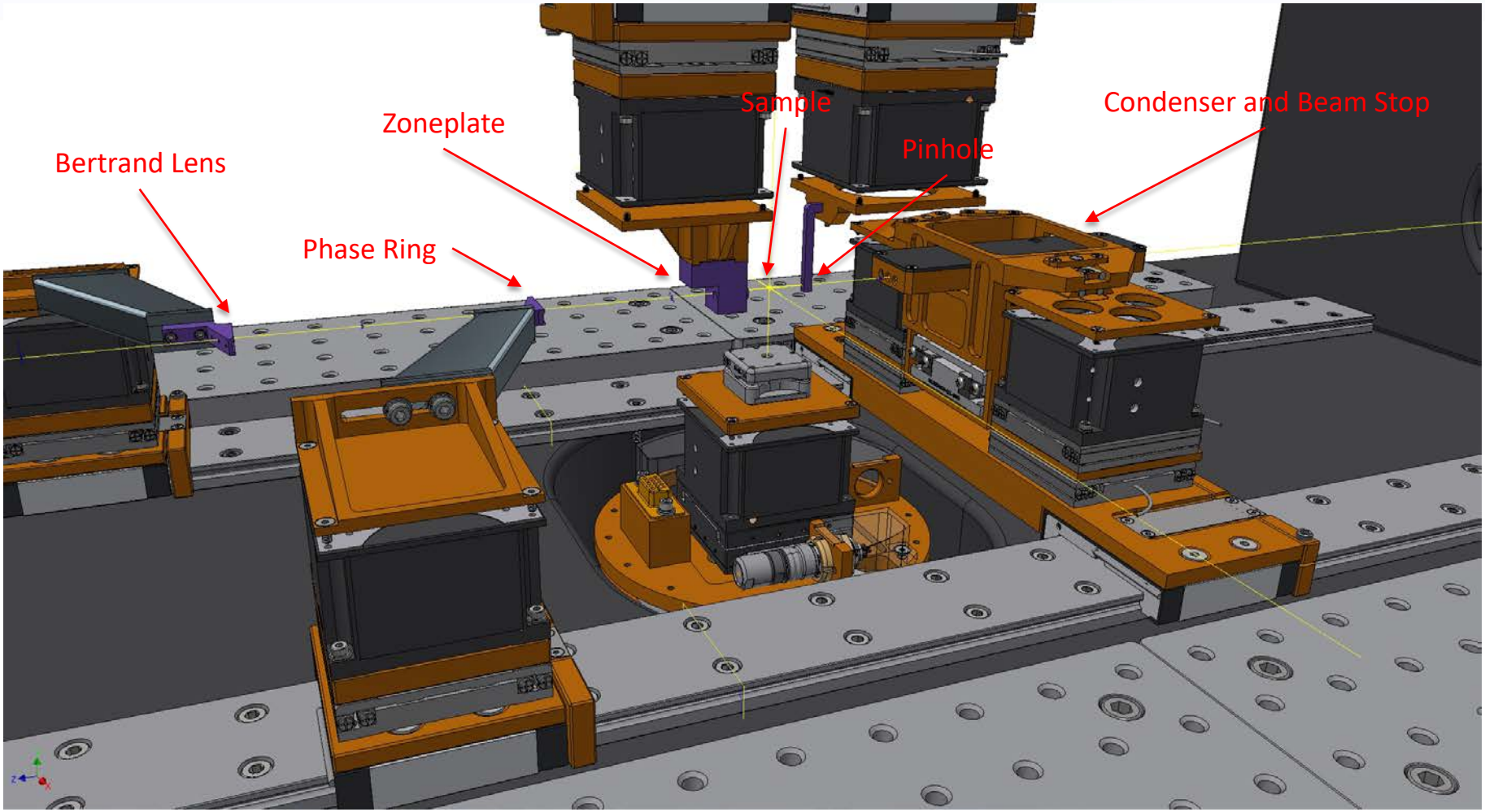

Sample Mounts

- Newport M-BK-1A magnetic kinematic base (12.7 mm height)
- 25 mm from beam to M-BK top surface
- Can accommodate HXN sample mount
- SRX "TOMO" mount will require removal of M-BK (32 mm from pin point to bottom surface)

Utilities

- Compressed air for sample rotation stage
  - Pressure: ideal 90 psi, minimum 30 psi, absolute maximum 150 psi
  - Flow rate: 3 SCFM (85 liters/minute)
- Helium gas cylinders, for flow through flight paths.
  - Supplied by stock gas cylinder, located outside of hutch.
  - Will use 15 psi maximum 2-stage regulator located on wall near the cylinder.
  - Will use ¼ inch 'Polyflo' tubing to supply He into hutch.
  - Will use 1/3 psi pressure relief valves (one at regulator output, one on each helium optics enclosure).

ESH

- Helium flight paths
- Be Window Interface
- Sample and Detector Station work platforms
- Other?

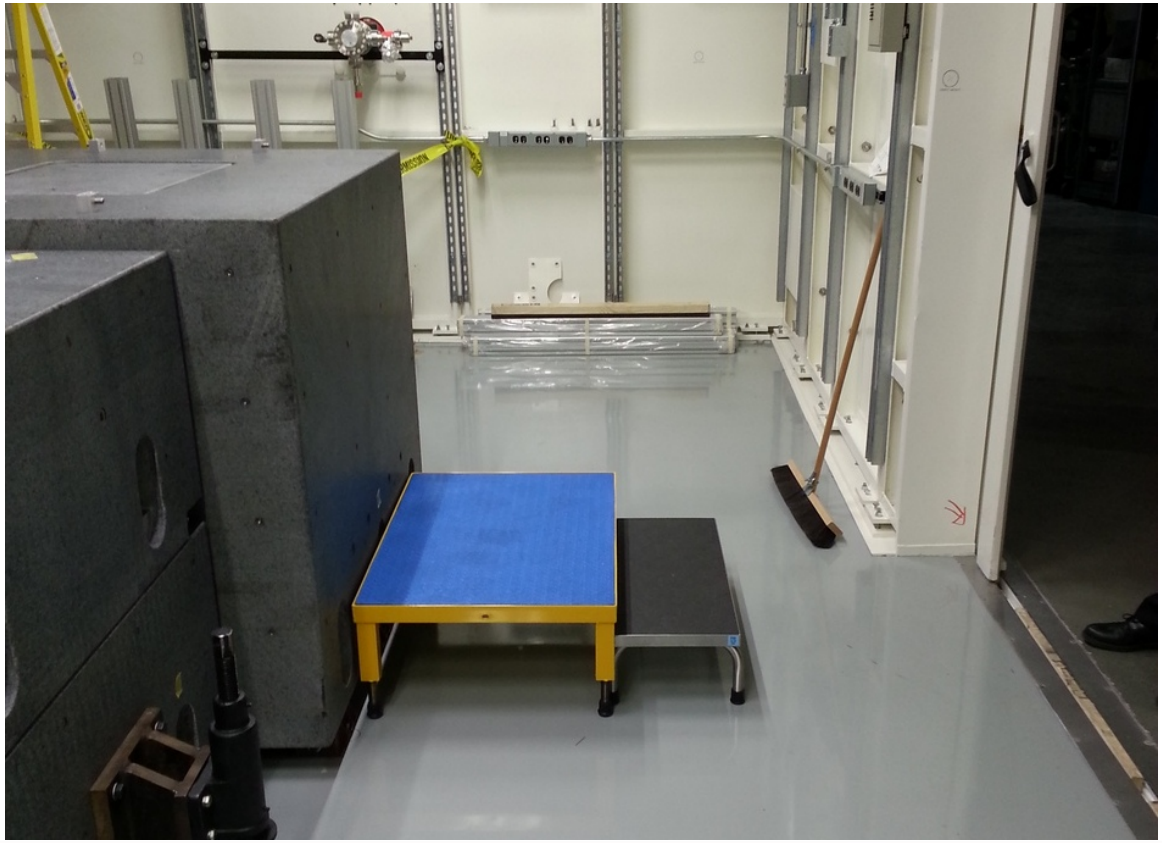

Be Window Interface

- Commercial (Electrofusion) Be window supplied by Toyama.
- Terminates photon delivery beam pipe inside experimental hutch.
- No-air-gap continuation into He filled flight path desired.

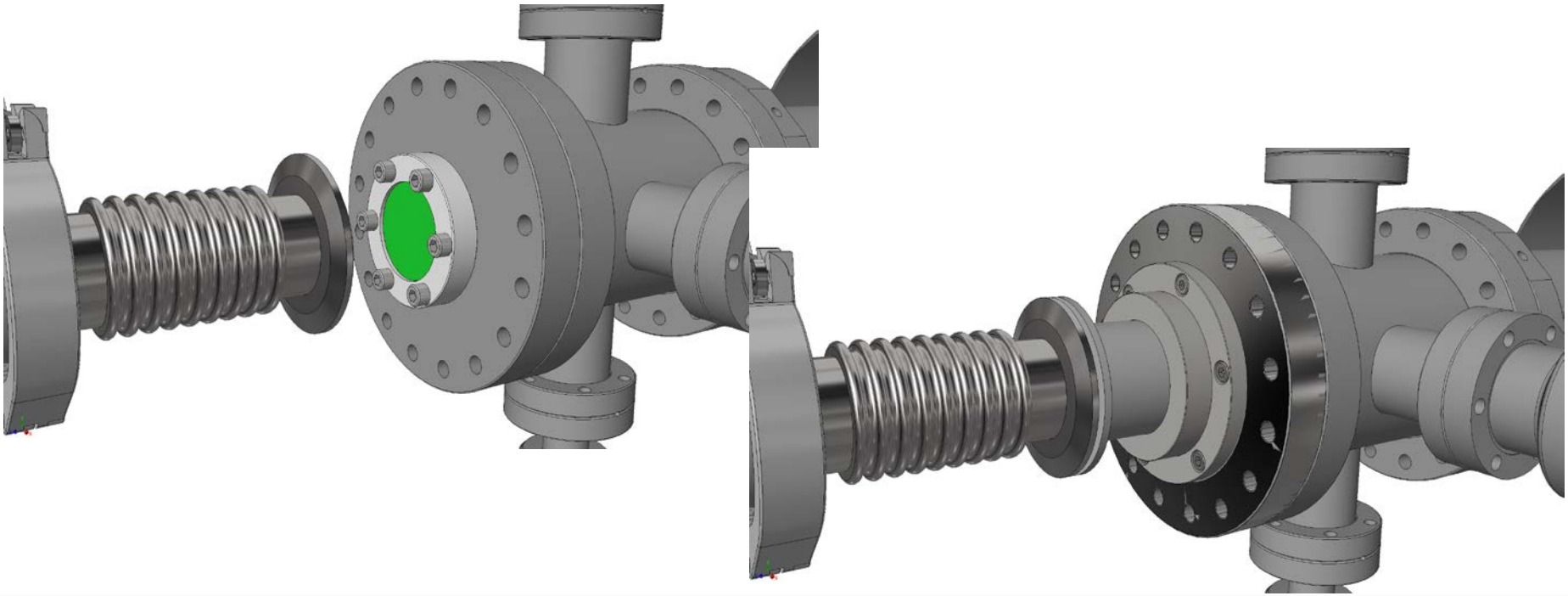

Be Window Interface (continued)

- Proposed solution is a ‘cover’ which fully encloses the Be window and seals against the terminating vacuum flange.
- Equipment safety issue with possible 1/3 psi He “over-pressure”?

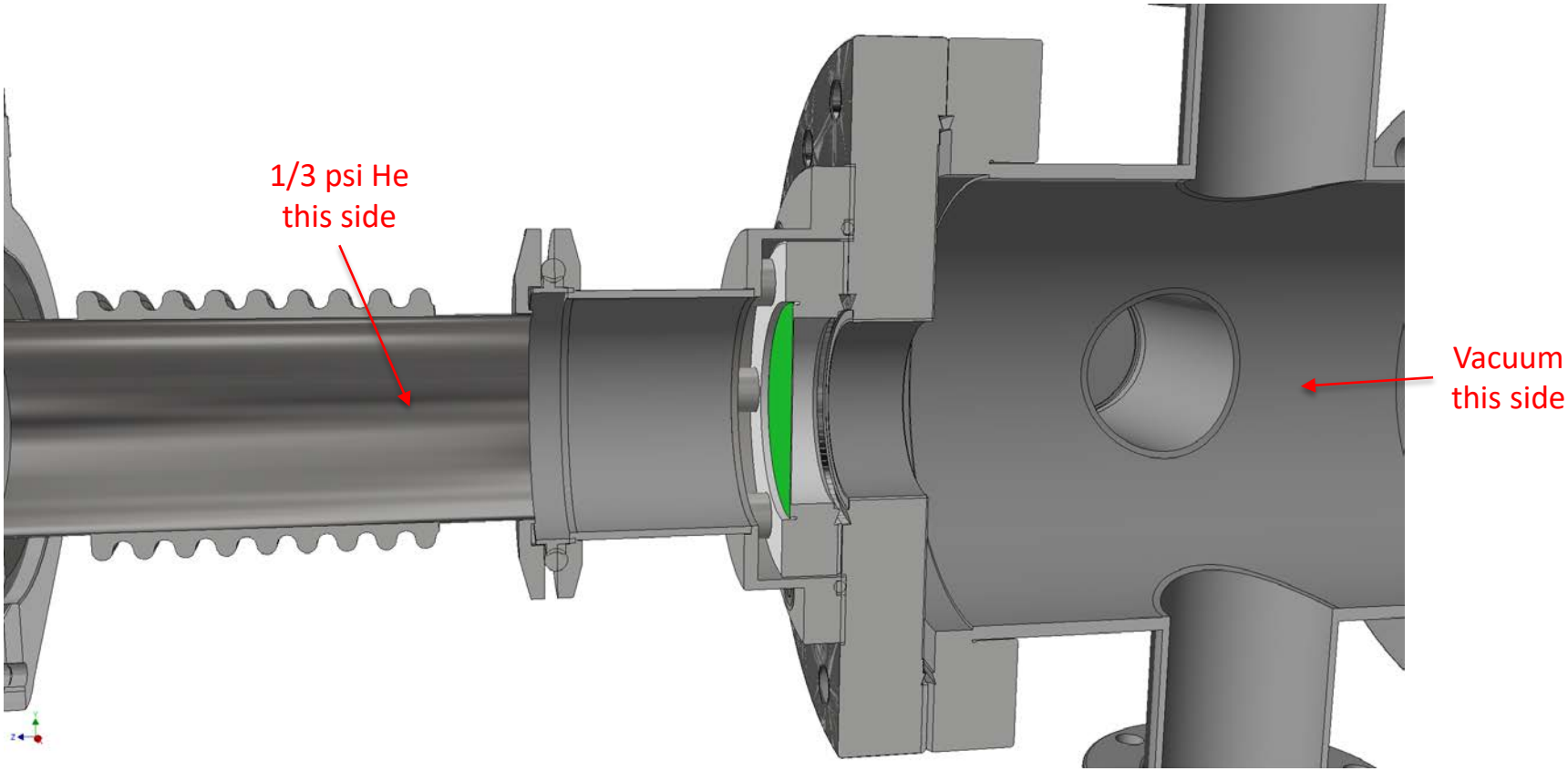

PDR Recommendations

- Recommendation 1: Perform analysis on the current frame or design a frame that is more rigid for the SSA assembly. DONE
- Recommendation 2: Look into possibly rotating the Y-stage to be aligned with the X axis. May not fit into current enclosure. DONE (detector Y motion stage)
- Recommendation 3: Consider putting a door on the detector chambers to allow for adjustment of the manual stage. Not done. (But I am reconsidering.)
- Recommendation 4: Plan out installation and consult with riggers to determine access and locating the granite. DONE
- Recommendation 5: Add handle to allow easy manual adjustment for moving the carriage assembly. Not done. (Concern is complexity of the enclosure and additional He leak potential.)
- Recommendation 6: Make the condenser aluminum housing out of one piece if the tilt stage fits in without issue. DONE
- Recommendation 7: Consider motorizing the motions on the sample station carriages for the optics and other components. DONE

Acknowledgements

- Evgeny Nazaretski
- Daniel Bacescu
- Mary Carlucci-Dayton
- Jonathan DiFabio (no longer at BNL)

- Jun Wang
- Yong Chu
- Karen Chen-Wiegart

- Weihe Xu