FXI Beamline Photon Delivery System Final Design Review: December 7-11, 2015

Final Design Review Meeting Report

Introduction to the FDR Meeting

This review will serve two purposes. Primarily it is a design review for the FXI PDS as part of a deliverable under the BSA contract with Toyama, scheduled for receipt at BNL in December 2016.

Secondly, it is also a safety review, which will used to assist the Instrument Readiness Review (IRR) process. A successful review will help to mitigate many of the potential risks associated with installation and commissioning activities. The Technical Representative and other reviewers should address the elements of the FDR Report Requirements from the Statement of Work (SOW) and Panel Charge questions listed within this agenda.

The following staff are formally invited. All are welcome to attend the review for any or all of the sessions. Please attend the sessions that are applicable to your area of review. If they cannot attend the session please send someone on your behalf to review that area and provide comments as needed.

<table>
<tr><th>Beamline team</th><th>Engineering and QA</th><th>ESH</th><th>Division Staff</th><th>Installation & Survey</th></tr>
<tr><td>Wah-Keat Lee
David Scott
Coburn</td><td rowspan="3">Carlucci-Dayton, Mary
O'Hara, Steve (FEA)
Todd, Robert (Vacuum)*
Zipper, Joseph (QA)</td><td>Cubillo, Mario
Gaffney, Michael
Stiegler, Lori</td><td rowspan="3">Buckley, Michael*
Sherwood, Stephen
Idir, Mourad
Hulbert, Steven (NEXT)
Adams, Julian (NxtGen)</td><td>Stebbins, Chris (Install Coord).</td></tr>
<tr><td>Procurement</td><td rowspan="2">Ray tracing & Shielding</td><td rowspan="2">Survey</td></tr>
<tr><td rowspan="2">Jeanmarie Volkmann
Janet Schlock</td><td>Controls and EPS</td></tr>
<tr><td>Zhijian Yin (Controls)
Kadyrov, Ruslan (EPS)</td><td>BL Designers
Benmerrouche, Mo
Zhong, Zhong*
Chris Stelmach
Rich Gambella</td><td>Ilardo, Matt
Karl, Frank
Ming Ke</td></tr>
</table>

*IRR core committee members

Attendees from Toyama:

Joe Endo (CEO)
Keisuke Tersashita (Commercial)
Shota Watanabe (Ray Tracing and Mechanical Design)
Koji Tsubota (Thermomechanical FEA)
Tetsuya Tachibana (Controls)
Carl Richardson (Technical Support)

Following the FDR, the Contractor will provide minutes and a final report. This minutes and report is required to be reviewed by BSA which will be the responsibility of the Contract Technical Representative (Wah-Keat Lee). The Tech Rep should take his/her own notes as well during the meeting. The Tech Rep or designee will distribute the minutes/report for review to many of the above individuals who will provide their comments.

The meeting started with general introductions of the participants present. On BNL side: WKL, Scott Coburn, Mary, Rob Todd, Julian, Mo, Vinita, Zipper, Sherwood.

1) Purchasing

i. Jeanmarie Volkmann reconfirmed the purchasing requirements for the project. It was agreed that any necessary changes to Specification/SOW/Contract will be done once FDR meeting report is agreed
ii. Toyama need to stay on top of SESO to meet the September delivery requirement for the toraoidal mirror
iii. It is really important that Toyama inform BNL of any likely slippage on any component

2) Walk-through of Complete Beamline Layout

i. Toyama provided a brief description of each component of the beamline.
ii. Cranes: Caratelli will install I-beams above both mirrors for "clip-on" chain hoists
iii. Beamline is designed to accommodate a large offset mono in a future upgrade scenario.
iv. Monochromatic beam stop at the end of 18-ID-B is part of hutch procurement.
v. Julian stated a preference for mirror ion pumps on top of the mirror lids instead of on the side. WKL is okay with the Toyama design having them on the side.

3) Ray Tracing

i. Toyama to add the dimension from the crossover point to the source, and give the angle of the synchrotron maximum fan on the drawings
ii. Mary expressed concern about mono beam bypassing the toroidal mirror and hitting the inner wall of the transport pipe. WKL is sure that this is not a problem because the x-ray energies are low due to the mirror cut-offs.
iii. Every addition discussed below should be added to ALL drawings:
    a) In the synchrotron max fan ray traces, add the following rows to the Table of Toleranced Dimensions: (1) ID of primary brehmsstrahlung collimator, (2) ID of beampipe for SBS-I, (3) ID of SBS-I lead, (4) ID of beampipe for SBS-II, (5) ID of SBS-II lead, (6) ID of primary brehmsstrahlung beampipe, (7) ID of primary brehmsstrahlung lead, (8) ID of beam transport pipe and (9) ID of beam transport lead shielding.
    b) Correct 25.3 to 25 mm for DCM offset in V synchrotron max fan
    c) Monochromatic safety shutter (BNL supply): need to show the 'aperture plates' in the photon shutter on the ray tracing. FXI will supply this information. These may be useful for any stray residual secondary bremsstrahlung rays.
    d) Add the beam transport between the two stations in the max fan synchrotron ray traces. Include the lead shielding and show pipe for beam transport as blue line
    e) Show the lead and tungsten thicknesses in the drawings
    f) Include the guillotine in the synchrotron ray trace drawings: Shota can check if all the details ate in the model, or FXI can send the dimensions
    g) In the max fan synchrotron ray traces, need to show monochromatic beam stop at end of end station wall (1 inch thick lead "plug" attached to the hutch end wall): FXI will give the dimensions to Shota.
    h) In the synchrotron max fan ray trace the beam is <u>not symmetric</u> about the ratchet wall collimator: this is wrong in Toyama's drawings so please check
iv. Some confusion about Bremsstrahlung ray-tracing for the ratchet wall collimator: the rays should go through all the lead of the collimator rather than just clipping the downstream edge. Toyama states that the opening angles of the fan entering the FOE and the 'cross-over'

points are consistent with the BNL front-end ray traces. Toyama will check the ray traces and figure out where the issue lies.

v. In the horizontal bremsstrahlung ray trace, Toyama has taken the approach of 'fully projecting' the primary brehmsstrahlung stop in the horizontal direction; ie, the pink beam aperture is shown in the primary bremsstrahlung stop. WKL will clarify if this is OK or should Toyama remove the aperture since it is in a different vertical plane.

vi. There are inconsistencies in the Toyama drawings regarding the front-end Pb collimators in both H and V directions. The Toyama max synchrotron fan ray traces depict the front-end collimators as asymmetric about the centerline; but the brehmsstrahlung ray traces depict them as symmetric about the centerline. The BNL front-end drawings show that the front – end Pb collimators are symmetric; although the max horizontal synchrotron fan is asymmetric . WKL will double check that the BNL ray traces are correct.

4) Secondary Bremsstrahlung Ray Tracing

i. Need to add a secondary Bremsstrahlung collimator; this results from the first fixed mask. This will be a lead collar around the outside of the bellows behind the in-vacuum collimator; the lead collar is 50 mm thick

5) Misaligned Beam Ray Tracing

i. At 5.5 mrad (11 mrad reflection angle) the reflected beam just misses the pink beam stop. If we increase the angle of the PBS to ~23.3 degrees than can catch this beam.

ii. FEA of PBS has been done at 25 degrees, so thermally should be OK. BUT this misaligned beam now comes too close to the Bremsstrahlung collimator internal wall; need to look at this again

iii. Change the reflection angle to 5.25 mrad and repeat the ray tracing. Then redesign the PBS to make sure you catch all of this with the required 3.5 mm vertical clearance (even if this means that the GlidCop comes up above the tungsten block)

iv. FXI will change the spec to limit the collimation mirror angle to 5.25 mrad

v. Toyama needs to check that the maximum misaligned rays do not come too close to the beampipes inner diameters.

6) PPS Components Discussions

i. Toyama gave a general description of the components

ii. Fiducial nests: Toyama will provide a limited number of nests

iii. Need to use small size nests for the fiducials that are machined into the conflat flanges

iv. Added on Day 4: Toyama agrees to machine in the necessary detail for a half inch target. This will be a hole with and angled counterbore to match the half inch nest

6a) Secondary Bremsstrahlung Collimator (new collimator)

i. Make 3 cuts in the upstream side that allow you to measure the upstream face and diameter of the lead with the Faro arm

ii. Make the split horizontal, not vertical (easier to assemble)

iii. May need to use a single strip of lead shim to centre the collimator around the beam

6b) Secondary Bremsstrahlung Collimator Number 1

i. Put holes in upstream face, sides and top of the housing (25mm diameter is OK) to allow lead position to be probed –

ii. Put tapped bosses on top of the cover for lifting.

iii. Toyama may buy the bricks in USA depending on how the ISS collimators go together

v. All the lead collimators and stops should have same sort of survey access holes for Faro-arms as described above

6c) Secondary Bremsstrahlung Collimator Number 2

i. Split the lead pieces vertically to make 4 pieces; this makes each piece lighter to install

6d) White beam stop/pink beam mask

i. Water channels will have a copper coil inserted; this is not shown on current drawing
ii. Thermostructural analysis is OK
iii. Tolerance for the exit aperture is +0.0/-0.05 milliradians
iv. Tolerance for entrance aperture is the same as for the fixed mask entrance aperture; see Ray Trace Guideline.

6e) Primary Bremsstrahlung Stop

i. Put holes on upstream face and sides as described above in 6b) above: 4 holes on each face
ii. From Day 4: Toyama to change the primary Bremsstrahlung stop design to use DN40 flanges instead of the DN100 flanges. This is to make it easier to see (for surveying) the end flanges of the beampipe that goes through the lead stop.

6f) Pink Beam Stop

i. Change to have a 3-point kinematic mount
ii. Ray tracing needs to confirm that the cooling pipes cannot be hit by the beam.
iii. Bottom of the beam profile can hit the lower part of PBS, possibly hitting the stainless steel support. There must also be a 3.5mm clearance between the GlidCop and the stainless steel support

6g) Secondary Bremsstrahlung Collimator Number 4

i. This is OK; already designed with a 3-point kinematic mount

7) Beam Transport

i. Upstream hutch interface design is OK
ii. Flange cover design is OK
iii. Ion pump housing: move labyrinth up by 10mm to make a better design of the join between the bottom of the enclosure and the labyrinth. Put a 10 mm thick piece of lead in the “bottom” of the labyrinth to “protect” the join between the labyrinth and the base.
iv. Add a bellows in the last downstream section
v. FXI to check the distance between the first and second hutches and send to Toyama (subsequently measured, but FXI to see if hutches are in overall floor layout plan as they look as if they have been recently surveyed)
vi. FXI will confirm if ALL lead surfaces need to be painted (even if they are not exposed when the housing is closed)

8) DCM (Day 2. BNL WKL, Scott, Lori, Mourad, Steve Sherwood)

i. Reviewed analysis of the thermo-mechanical behaviour of the mono first crystal
ii. Julian suggests we should use the anisotropic properties of the silicon, NOT the isotropic properties, to calculate the deformation of the first crystal
iii. Rotation will be limited to 30 degrees (4 keV); angle will be limited by a limit switch on the mono Bragg drive

iv. Toyama showed parallelism data from ISR and ISS. Over 5-30 degrees, the pitch parallelism is 12 arc seconds and 30 arc seconds for ISR and ISS respectively. The roll parallelism is 4 arc seconds and 2 arc seconds for ISR and ISS respectively.
v. Toyama showed theta2 fine-adjust PZT motion for ISR based on the stage encoder readings. The data shows steps of 0.24 µrad. This is much larger than what should be possible based on the minimum PZT steps. The encoder resolution was 30 nrad and assuming the minimum PZT step, the stage should be able to move at the 7 nrad level. Toyama was not sure why smaller steps were not demonstrated.
vi. Toyama did not have any vibration data for either ISS or ISR in angular units. They only have power spectrum. Toyama will try to get this data.
vii. (Added on Day 3) Toyama should provide the stress data for the DCM first crystal in the FDR report; data was shown but will need to be repeated when the anisotropic calculations are done
viii. (Added on Day 3) Toyama will re-calculate the FEA using the anisotropic properties of Si for the first crystal
ix. Toyama to run the analysis of the mono first crystal with a higher heat load to confirm that this does produce a thermal bump on the crystal: Koji also showed data at higher heat load where the model does show a small heat bump
x. From Day 5: further discussion about how best to cool the second crystal in order to minimise vibrations. Koji to calculate the time to stabilise the second crystal temperature from beam off to beam on condition with the copper spring design. Toyama will produce two designs for a side cooled and copper spring cooled second crystal stage, and consider the design so that changing from one to the other requires the minimum number of new parts.

9) Cryocooler

i. Need to clarify if the high speed pump is needed to achieve the 5 gpm (20 l/minute) flow rate that is specified by FXI. FXI made it clear that this flow rate specification must be achieved and demonstrated during the FAT
ii. Flow rates: Toyama still need to calculate the flow rates due to the internals of the mono
iii. WKL recalled the discussion with Mr. Ohkubo at the pre-FDR meeting in which he stated that the maximum flow rate achievable by the ISR cryocooler was 11 L/min. WKL also recall that it has been shown that the maximum flow rate for the ISS cryocooler using the larger Barber Nicolls pump was about 20 L/min. Thus, WKL believes that the FXI flow rate specifications will require the use of the larger Barber Nicolls pump.
iv. Need to confirm power supply requirements 208VAC 30A single phase; also what size (power rating) of heaters are needed for the exhaust lines
v. (Added on Day 4): Cryo-cooler power requirements:
    a. Power supply 208 VAC, 30 A three phase
    b. Heaters 208 VAC, 20 A
    c. Controls 110 VAC, 10 A
vi. Toyama needs to confirm these requirements with Suzuki Shokan so that FXI can specify the outlets
vii. Discussion of second crystal stage – flexure vs “conventional” stage
viii. FXI confirms that they will go with conventional stages for the crystal cage
ix. FXI will consider changing the parallelism specification to >5 µrad. Could relax specification to make it 5 arcseconds (~25 µrad)

x. Toyama to supply vibrational data from ISR to FXI for operation with and without LN2 flowing
xi. Vibrations: need to determine the limit that Toyama can measure in its new facility. Toyama will test new thermal enclosure very soon (by end December) and report to FXI
xii. FXI is willing to discuss the 0.2urad stability requirement. Need data from Toyama by early in the new year to confirm what is realistically achievable
xiii. Mono vacuum: $5x10^{-8}$ mbar after cooling with LN2 is the specification. Discussion about what it should achieve when warm (without LN2); Toyama states that the vacuum should be into 10^{-8} mbar range when warm

10) Toroidal Mirror

i. Does piezo have enough range to go from flat to 5km bent without adjustment of the mechanical preset? Probably not, but Toyama need to confirm what the range will be: from XX km to 5 km
ii. Working condition for the mirror is a radius of 10.8 km
iii. Toyama need to design a transit box to move the mirror from the metrology lab to the beamline; Scott/Carl to check if the IXS transport box can be used
iv. Need to consider how to lift the mirror into the chamber; discussion of where the lifting points should be place. Should be on the upper end plates as this gives the clearest access
v. Toyama to consider the design of gravity compensators to make set-up easier and allow the possibility to ship the bender without changing the gravity compensation settings
vi. Fiducials: move the fiducials on the main granite so that they can all be seen from one side
vii. Also need fiducials adding to the upper granite so that it can be measured with respect to the internal position of the mirror
viii. FXI will send the floor vibration data to Toyama so that vibration amplitudes can be calculated
ix. Toyama confirmed that all in-vacuum screws are vented.
x. Toyama does not know if the in-vacuum stages can be driven off hard-stops should the two sets of limit switches fail.
xi. Mourad Idir (BNL metrology) plans to make modifications to his metrology instruments to be able to accommodate FXI mirrors.
xii. Discussion on issue of mirror twist. Toyama states that the bender design consists of one set of angular bearings and one set of self-aligning bearings and so, twist should not occur. However, this has not been demonstrated because the ISR and ISS mirrors have not been measured.
xiii. There was a discussion on the FAT for the toroidal mirror. SESO is the manufacturer, but will only send it to Toyama in Japan. Toyama is still looking into where/who is willing to do the FAT for this mirror.
xiv. The vacuum chamber for the TM does not need an overpressure burst disk because there is no fluids.
xv. Added on Day 3: Toyama to consider substitute the TM ion pumps with the tall narrower pumps like IXS. See discussion on section 13.

11) Non-optics Components

11a) White and Pink Beam Screen

i. Toyama have tried inserting a graphite screen and using 300 micron diamond, but the FEA still shows we have graphite at >1000°C
ii. Proposal is to have a pair of graphite foils upstream of the graphite/diamond “sandwich”

iii. Probably also need an internal cooled copper shield to catch the radiated heat. Try to design this shield so that it can be mounted from the top flange (same flange as screen actuator)
iv. White and pink beam screen calculations are to be only for the current scenario, NOT the upgrade scenario. WKL agrees to make changes to the Specifications on this component.
v. There will be scribes on the copper block as fiducials.

11b) Pink Beam Slit - 4 Jaw Slits

i. All looks OK

11c) Pin/Mono Beam Screen

i. Will make similar changes to those described above
ii. Monochromatic beam portion of the screen will not need the graphite.
iii. There will be scribes on the copper block as fiducials.

11d) Mono Beam Screen

i. Design is similar to others but no water cooling, no thermocouple
ii. Screen material is YAG
iii. For ALL the screens, need to make sure that the camera focuses on the screen – a concern because the camera is not looking at the screens at normal incidence. Toyama will check the depth of focus for the lenses.
iv. Can use a standard Kodial viewport with lead glass disk here: NOTE all other viewports should be quartz with lead glass disk
v. For this screen – use 1mm graticule for the crosshairs

11e) Beryllium Window

i. Toyama to get quote from Materion for standard window, but it must be in IF-1 material
ii. Suitable size is order number DB275153 as shown below:

Order Number	Flange Outside Diameter	Aperture Diameter	Minimum Foil Thickness
DB275153	ø70mm (ø2.75")	ø39mm (ø1.53")	0.13mm (0.005")
DB338200	ø86mm (ø3.38")	ø51mm (ø2.00")	0.18mm (0.007")

iii. BNL will still require the Be window to be pressure cycle tested. Toyama have requested a special test of 10 pressure cycles (atmosphere to vacuum) for the windows for ISR
iv. Toyama to send Materion catalogue info to FXI for the “standard” Be window
v. This window is single-ended (vacuum on one side).

12) Collimation Mirror (Day 3. BNL WKL, Julian, Mike Gaffney, Mario, Lori, Rob Todd, Steve Sherwood, Joe Zipper)

i. Review of FEA data is accepted
ii. Mechanical design is very similar to toroidal mirror (already discussed on Day 2)
iii. Julian expressed concern that the copper cooling block is a single piece as opposed to multiple smaller pieces. This may affect the bendability of the mirror. ISR mirror is done with a single cooling block and will be measured (mirror and bender) at BNL in January. Toyama will modify design if needed after the ISR measurements.
iv. One viewport in the middle is OK; quartz with lead glass
v. Weld procedure needed for lifting points on the chamber, and material certs
vi. Add fiducials to upper granite: same as for toroidal mirror
vii. Bolts are missing from Compton shield pillars

viii. No Kapton tape for the thermocouple mounts (not Kapton, just "looks" like it in the model). The thermocouples are fixed with a clamping plate.
ix. Insulation on disaster mask thermocouple should be ceramic beads or twin bore ceramic tube to limit outgassing if it gets very hot
x. Disaster mask; change the design so that GlidCops cover the opening so that it protects the mirror clamps. Change design so that the Heavymet covers all the GlidCop and has an aperture of something like 19 mm x 60 mm (to be confirmed)
xi. Toyama to set the limits so that the Y jacks so that we have +/- 8 mm centred on 1400 mm (specification should be changed). WKL will follow up on this.
xii. Discussion of water cooling circuit; Toyama agrees that single pass design should be changed so that there are two parallel circuits, one for each side of the mirror and bender frame
xiii. FXI should add temperature sensors and flow meters to ensure that both mirror/bender circuit are doing the same thing. This design is also better because the forces on the mirror resulting from the cooling lines will be more symmetrical
xiv. Nominal working radius is 13km (centre deflection is ~47 microns)
xv. Toyama to confirm the material of the kinematic mounts: phosphor bronze or hardened steel (440C) or what?
xvi. Kinematic mounts should be lubricated. Does Toyama put some MoS_2 coating on the kinematic mounts?
xvii. Put a 5mm Ta or W shielding around the encoders on the X stages. This can be an "L-shaped" plate on upstream and L plate encoder
xviii. Move the downstream encoder to the inside side; this then only needs an L-plate to protect it from radiation damage coming from the mirror scatter.
xix. Flexible tubing inside the vacuum guard must NOT be Nylon. Tubing should be glass-reinforced silicone tube as used for MAX IX cPGMs
xx. Compton shield: make the central hole a small slot, not a 100 diameter hole (15 mm x 100 mm slot)
xxi. Paint colour for frames should be same blue as used for ISS
xxii. Lifting points on the top plates at the ends; same for the toroidal mirror
xxiii. There was a discussion whether the vacuum guards should be evacuated or can be at atmosphere. If evacuation is needed, BNL will provide a small diaphragm pump and pressure gauge for this purpose.

13) Safety-related Items and Vacuum Discussion (Lori, Gaffney, Mario & Todd)

i. All the gate valves should have double switches
Burst disks: Toyama must supply BNL-approved burst disks and make sure that the rating plates are retained. Any section that has water or LN2 in it needs to have a burst disk:
   a) Differential pumping
   b) Collimation mirror
   c) Mono (x2)
   d) Water-cooled monitors and slits
   e) Cryocooler and transfer lines
ii. Pumping speed calculations; Toyama requested to use a representative pumping speed for the ion pumps when making the calculations (i.e. use the pumping speed at a pressure of around 10^{-7} to 10^{-8} mbar)
iii. Mono: Toyama to confirm that there is a spare DN64 (114mm OD) port on the chamber to allow a larger valve and pumping hose to be used for the initial pumpdown using pump cart
iv. Toyama need to supply all specification sheets for all the in-vacuum components

v. Toyama need to supply a list of all the in-vacuum materials that are used, especially the specification sheets for any in-vacuum cables (Kapton etc.)
vi. Toyama need to supply a list of all in-vacuum lubricants (MoS_2 etc.)
vii. Burst disks should be located on the downside of items and pointing so that they cannot damage other equipment or injure personnel
viii. Water cooling tubing should be tested to 1.5 x design pressure for hydrostatic testing: Toyama probably needs to use the glass-reinforced flexible tubing (MAX IV design)
ix. FXI needs to define the chiller, including the maximum pressure that it can supply, once Toyama have confirmed the water flow calculations
x. Viewports: buy from a reputable vendor. All viewports to have protective covers
xi. Ion pumps: the pumps should be supplied with the HV connector on the pumping port that is connected to the chamber. This will enable addition of a second neg pump on the free port. Toyama to consider using the Gamma 500T pump as used for IXS. Toyama to consider this pump as it may allow the ion pump to be on the outboard side of the toroidal mirror chamber
xii. Make sure that he trace heating is 115 VAC, and less than 20 A per circuit
xiii. Heater tapes: are UL-listed heater tapes available (if not, then it is OK)
xiv. BNL would prefer to have the heater terminal connections inside a steel box: suggest box with cable gland for pigtails to exit
xv. Earth bonding: frames need to have either an M6 tapped hole or an M6 stud for connecting an earth wire
xvi. Move the downstream beam transport support stand in the hutch as close as possible to the guillotine to allow as much space as possible for getting to the back of the mirror
xvii. Toyama says that all hardware is silver plated – including the CF flange and mirror lid.

14) QA Discussion with Joe Zipper

i. Joe Zipper had some questions about Toyama's capacity and what else is going through the factory at the same time as the FXI contract. Joe Endo explained the likely other projects and confirmed that Toyama does not have any problems with manufacturing or test capacity for the FXI project
ii. Gannt chart: Toyama to provide more detail so that progess can be monitored. For example, split out the 2 mirror systems, DCM, cryocooler and beam transport into separate manufacturing, assembly and test activities
iii. Mirror FAT at SESO for toroidal mirror; possibly Wah-Keat and Mourad will attend
iv. Mirror FAT for the collimation mirror; Toyama have yet to determine the vendor for this mirror but it is very likely to be Crystal Scientific. Toyama will also see if Crystal Scientific will agree to do the collimation mirror bender testing. Toyama will also ask if the toroidal mirror bender tests can be done at Crystal Scientific
v. EPS boxes: Toyama to confirm when FXI need to ship them

15) Water Flow and Pressure Drop Calculations

i. Toyama doesn't need to supply the water flow valves; remove from the water flow diagram
ii. PPS cooling circuit: calculations show that one loop is OK
iii. EPS cooling : calculations show that two loops are necessary
iv. Need to recalculate the EPS cooling once the design of the white/pink beam screen is decided; may also need to add the water-cooled shroud to the circuit for the beam screen to the EPS loop

v. Collimation mirror: the single pass circuit (which needs to be changed) shows 87 Psi pressure drop. This is too high. Toyama to recalculate with the split mirror cooling circuit. Also run the Compton shield in a parallel circuit
vi. Should also include the disaster mask in the chiller circuit; this can be in series with the Compton shield
vii. Toyama should also confirm the FEA for the collimation mirror using an inlet temperature of 35°C. This is because FXI may choose to use the building DI "warm" (~30C) water to "cool" the chiller. The alternative is to use the much colder process chilled water circuit to cool the chiller. WKL and SC will look into more details of chiller, including its location.

16) Survey with Ming (Day 4. Ming, Buckley, Lori, Stebbins, Ruslan, Wayne)

i. Fiducials – holes and tapers to take half inch balls. Toyama should define the surface finish of the taper. Based on BNL drawing PD-SA-1001-Rev A without the spot face
ii. Toyama described a "walk-through" of the beamline showing all fiducial positions
iii. On the mirror benders; Toyama to provide four fiducials but make them for the half inch targets machined into the top plates
iv. Mono needs two more fiducials on the top of the granite (inboard side)
v. Change pink beam stop to have the fiducials machined into the flange rather using the "T" bars
vi. Mono beam monitor; needs to have an additional fiducial on the mounting flange in case it has to be removed it from the chamber
vii. 2nd Bremsstrahlung collimator # 4; remove fiducial posts from the design (not necessary)
viii. Toyama should seriously consider bringing its own survey tools (either a laser tracker or conventional instruments) for the installation
ix. There was an issue with the survey access to beampipe through the primary brehmsstrahlung stop. Current design has a larger CF on the outside of the smaller CF that is directly attached to the beampipe; thus shielding direct access to the smaller CF. Toyama will redesign this transition.

17) Installation with Chris Stebbins

i. Toyama aiming for the system to arrive at BNL in late November 2016
ii. Installation to start early January 2017
iii. Toyama to send installation documentation in October 2016
iv. Toyama to send all final drawings to Scott 3 months in advance of the installation start date
v. Jim Biancarosa will be the lead technician and work control coordinator for the installation
vi. Grout to be provided by BNL
vii. FXI to get the floor survey done to show the floor height inside the FOE and send to Toyama
viii. Floor anchors: BNL to drill holes, supply and fit anchors and provide suitable inch bolts
ix. Toyama needs to have an accurate (±2 inch) position of LN2 drops for the cryocooler system
x. Toyama does not need to provide the jacking casters if they are of the standard types that BNL has.

18) EPS with Ruslan Kadyrov

i. Ruslan explained what he needs from Toyama and how the process works; this is the same as for previous contracts
ii. Toyama needs to supply BNL with a list of all the signals for EPS.
iii. BNL will determine the EPS modules and boxes needed, assemble the boxes and ship them to Toyama.
iv. Toyama will install boxes and make the connections to the modules.

v. Gate valves: all should have 2 sets of switches with two separate connectors as makes wiring to the front end EPS easy. Toyama to check the VAT order codes to make sure that the valves are delivered with two separate limit switch connectors
vi. Toyama should wire up the gate valves to the EPS

19) Controls with Wayne Lewis

i. Scope: no software. Note that Toyama is responsible for all motors, cables and controllers for all the in-vacuum motors. FXI may consider providing the cables for the in-vacuum stepper motors as this may make more sense than having Toyama supply them. The in-vacuum stepper motors are:
    a. 2 x Phytron for each mirror
    b. 2 x Phytron (DCM mono 2nd xtal pitch and roll)
    c. 1 x Phytron (DCM mono Y translation)
ii. Toyama to supply 1 x 8 channel DeltaTau controller
iii. All encoders are incremental in the current design
iv. Suggestion is to change the Y stage encoders to absolute (x 6 pieces)
v. FXI need to decide the type of encoders for the Y stages; absolute encoder to have 50nm resolution if FXI do decide to use them
vi. Toyama needs to test some sort of "stream device" for the load cell controller to see if EPICS can talk to it. Check this using a TELNET session; if this works then EPICS should be OK.
vii. Toyama to send Wayne the specification sheet for the load cell controller (Toyosokki). Toyama to check if RS232 <u>AND</u> 0-10V are available; if only RS232 is available and it works then that is fine
viii. Be careful about the part numbers for the MKS gauges: need to use the BNL part numbers!
ix. Cameras: Allied GTI PoE cameras are OK. It is not necessary for Toyama to shield the cameras.
x. Out of vacuum encoders: need to shield these on the Y stages of the collimating mirror as well as the in-vacuum encoders. Shield these encoders from <u>above</u>: this is because the collimating mirror is the source of the damaging radiation. Maybe use a 10 mm lead plate bonded to stainless steel and painted red
xi. Cryocooler: this is the same as ISS and ISR as far as the controls system is concerned
xii. Heater controller for the DCM crystals. Eurotherm 2400 series controllers are OK with EPICS: Wayne can give Toyama a list of temperature controllers that are EPICS compatible
xiii. PZT controllers are placed under the primary brehmsstrahlung stop and has lead shielding on the top and upstream side.
xiv. Controls for the cryocooler will be similar to ISS/ISR. BNL will provide EPS box/modules for cryocooler – after BNL receives the signals list.

20) FAT for Optics

i. Mirror FAT at SESO for toroidal mirror; possibly Wah-Keat and Mourad will attend
ii. Mirror FAT for the collimation mirror; vendor is likely to be Crystal Scientific.
iii. Toyama will ask if Crystal Scientific will agree to do the collimation mirror bender testing.
iv. Toyama will also ask if the toroidal mirror bender tests can be done at Crystal Scientific
v. DCM crystals: FAT not required, just inspection reports from the vendor (Crystal Scientific)

21) Visit the FXI hutches on the experimental floor. Toyama staff took opportunity to take pictures and make measurements.

22) Wrap-up (Day 5. WKL, Jeanmarie Volkmann)

WKL briefly updated Jeanmarie on status. WKL is ready to approve the FDR once he receives a more detailed schedule from Toyama. Suggests that Toyama submits an invoice the same time it uploads the FDR report onto the ftp site.

WKL confirmed with Jeanmarie that Specification changes via an ECR can be done after the FDR approval. WKL expects to start on the ECR in January.

WKL confirms that he chooses the conventional bearings stage design for the DCM.

WKL would like Toyama to consider a design where the DCM second crystal can be cooled either with braids/foil or direct Si-cooled-copper block contact. The issue is that since there is no data on LN2 flow related vibrations on the ISR DCM and there is one FEA showing that it takes 5 hours to cool down the second crystal with foil, there is insufficient information for WKL to make a decision on which approach will work.

	DRAWING LIST		20-Nov-2015			
DWG No.	Item		Remark			
0AB01049	LAYOUT		2D			
0AB01045	Differential Pumping assy		2D,3D			
1AB01504		Fixed mask (FM)	2D			
2AJ00763		Bremsstrahlung collimator (BC)	2D			
2AJ00770		Secondary bremsstrahlung shielding0 (SBS-0)	2D			
0AB01047	Collimating mirror (CM)		2D,3D			
0AG00246		CM HOLDER	2D			
2JG00847		COLLIMATING MIRROR	2D			
1AJ00505	Secondary bremsstrahlung shielding I (SBS-I)		2D,3D			
2AB00453	Pumping station		2D,3D			
1AJ00506	Secondary bremsstrahlung shielding II (SBS-II)		2D,3D			
0AB01046	WPFS＆WSTPM_Uint_Assy		2D,3D			
2AB00448		White and pink beam fluorescent screen (WPFS)	2D	Not atattched(FEA has not done)		
1AB01505		White beam stop and pink beam mask (WSTPM)	2D			
1AJ00507		Primary bremsstrahlung stop (PBRST)	2D			
1AG01007		Pink beam slits (PBSL)	2D,3D			
0AB01050	DCM		2D,3D			
0AF00288		DCM inside mech	2D,3D			
2AE00775		χ1Stage_Assy	2D,3D			
2AF00090		χ2・θ2_Stage_Assy	2D,3D			
3AG00196		Crystal_Holder1	2D,3D			
3AG00197		Crystal_Holder2	2D,3D			
0AB01055	PMFSandPBSassy		2D,3D			
2AB00448		White and pink beam fluorescent screen (WPFS)	2D	Not atattched(FEA has not done)		
2AJ00764		PBST+SBS-III	2D,3D			
0AB01048	TOROIDAL MIRROR		2D,3D			
0AG00246		TM HOLDER	2D			
2JG00848		CYLINDRICAL MIRROR	2D			
1AB01509	MFS&SBCⅣ Assy.		2D,3D			
2AB00450		Monochromatic fluorescent screen (MFS)	2D			
2AJ00767		secondary bremsstrahlung shielding (SBS-IV)	2D			
3AB00137	Beryllium_Window		2D			
0AB01056	FXI Beam Transport System		2D,3D			
0AJ00069		FXI Ion Pump Enclosure	2D			
2AD00474		FXI Shield Vacuum Pipe Support	2D			
2AJ00768		Flange Enclosure	2D			
2BE00203		Shield Vacuum Pipe	2D			
3AJ00719		FXI Hutch Enclosure	2D			
3BB00477		6-way vacuum cross	2D			
2AD00475		FXI Vacuum Pipe Support	2D			
RAYTRACING						
1AA00052	FXI RAYTRACING HORIZONTAL					
1AA00053	FXI RAYTRACING VERTICAL					
1AA00054	FXI BREMSSTRALUNG TRACE HOR					
1AA00055	FXI BREMSSTRALUNG TRACE VER					
1AA00056	FXI RAYTRACING WITH PPS HOR					
1AA00057	FXI RAYTRACING WITH PPS VER					
1AA00058	FXI 2ndBREMS TRACE HOR					
1AA00059	FXI 2ndBREMS TRACE VER					
1AA00060	FXI RAYTRACING MISSALIGN HOR					
1AA00061	FXI RAYTRACING MISSALIGN VER					
1AA00062	FXI RAYTRACING HOR-CURRENT					
1AA00064	FXI MASK-COLLIMATOR DETAIL					

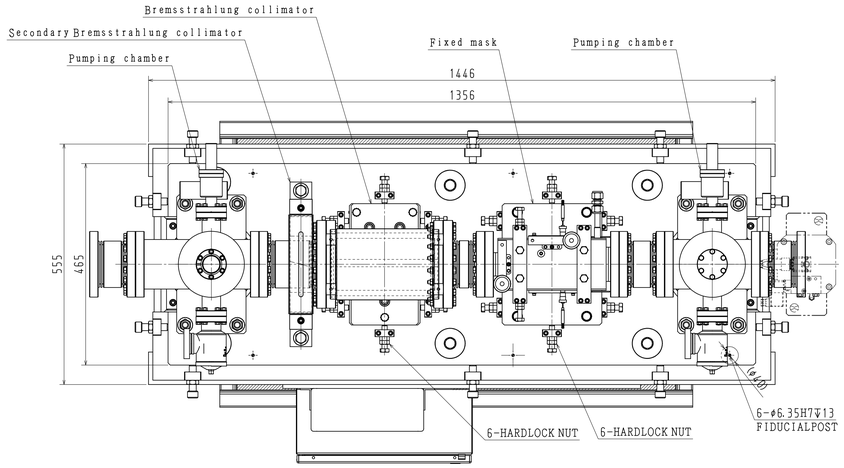

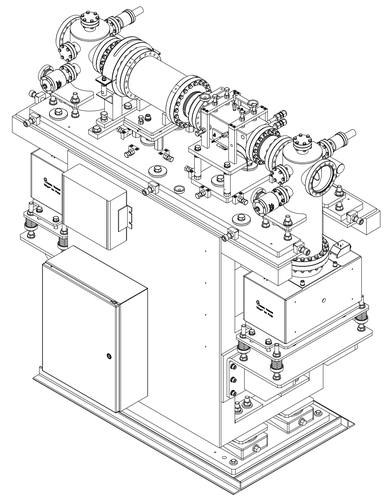

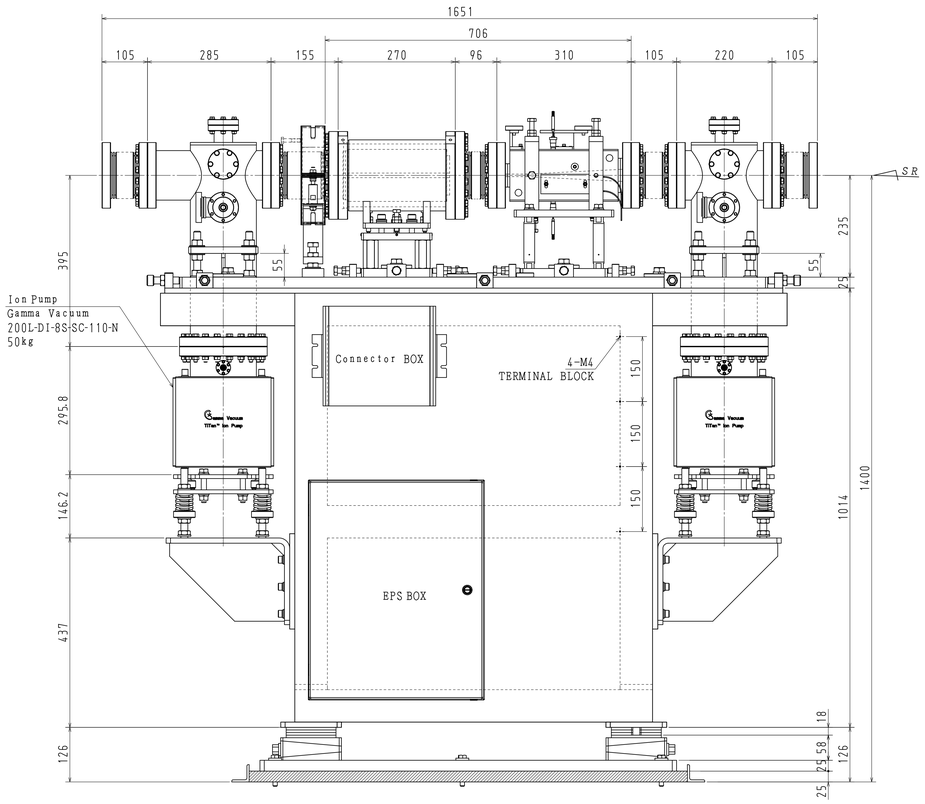

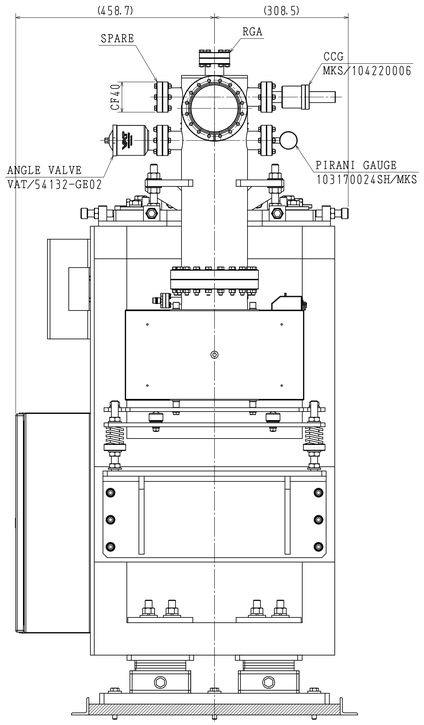

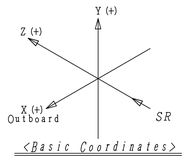

<Manual Adjustment Mechanism>

	Axis	Range	Resolution	note
Pumping Chamber	Y	±10mm	2mm/rev.	M16 metric coarse thread
FAM	X	±15mm	2mm/rev.	M16 metric coarse thread
	Y	± 5mm	2mm/rev.	M10 metric coarse thread
	Z	±15mm	2mm/rev.	M16 metric coarse thread
BC	X	±15mm	2mm/rev.	M16 metric coarse thread
	Y	± 5mm	2mm/rev.	M10 metric coarse thread
	Z	±15mm	2mm/rev.	M16 metric coarse thread
SBC0	Y	±10mm	2mm/rev.	M16 metric coarse thread
Whole Components (adjustment plate)	X	±15mm	2mm/rev.	M16 metric coarse thread
	Z	±15mm	2mm/rev.	M16 metric coarse thread
Support Structure (leveling block)	Y	±24mm	0.3mm/rev. 6mm/pcs.	Leveling block ±6mm Shim plate 6mmx3pcs.

REV	MODIFICATION	DATE	MOD/BY
4	Rearrangement of each components	27/Nov/2015	S.Watanabe
3	Rearrangement of each components, Hardlock nut CNTL BOXs and feed plates are installed.	19/Nov/2015	S.Watanabe
2	Rearrangement of each components, support structure	06/Nov/2015	S.Watanabe
1	Rearrangement of each components, support structure, Hardlock nut is used for position adjustment screws of FM	28/Oct/2015	S.Watanabe

CHECKED BY: Akiyama 27/Nov/2015
DESIGNED BY: Watanabe 27/Nov/2015
DRAWN BY: Watanabe 27/Nov/2015
UNIT: mm
TITLE: NSLS2/PXI Beamline Differential Pumping Assy
TOYAMA co.,ltd
SCALE 1:5
DWG No. 0AB-01045

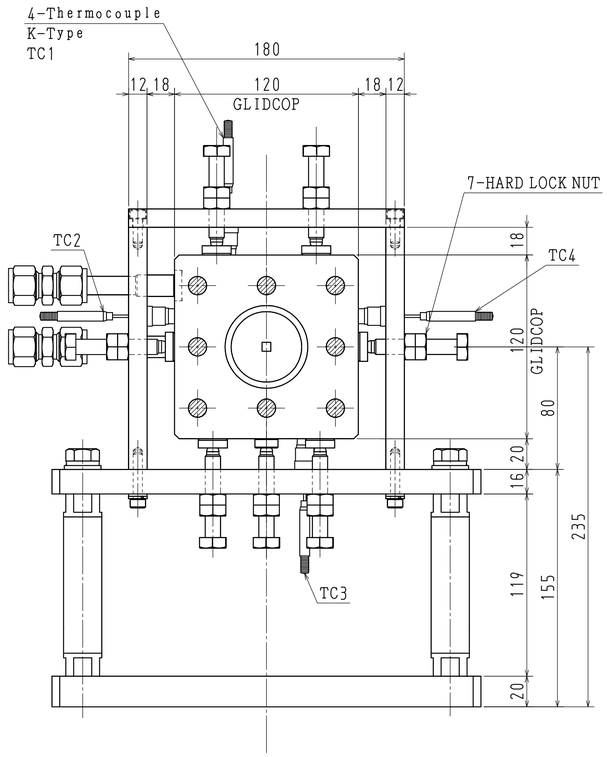

D-D SECTION
S=1/2

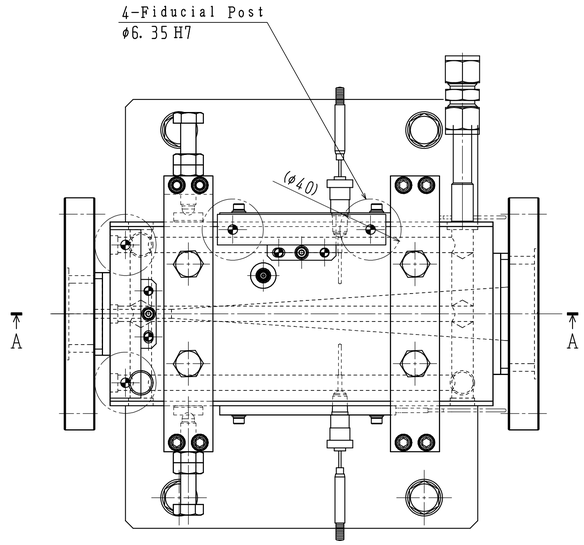

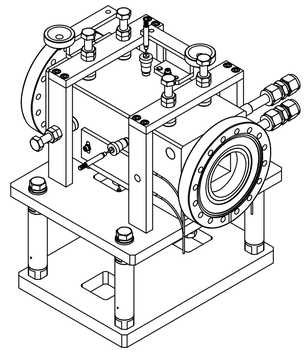

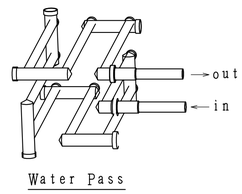

Water Pass

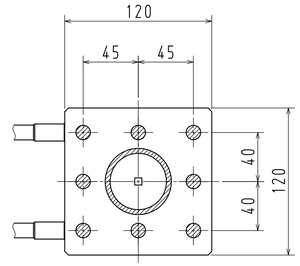

C-C SECTION

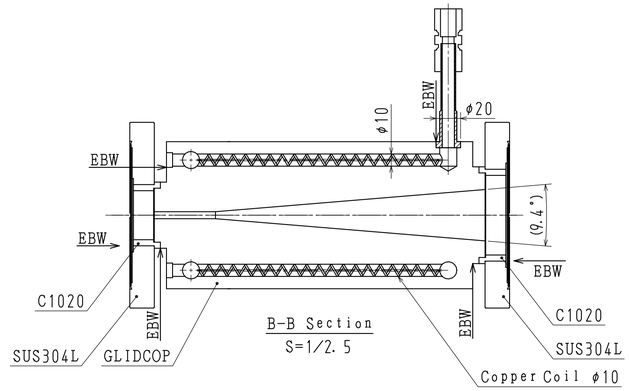

B-B Section
S=1/2.5

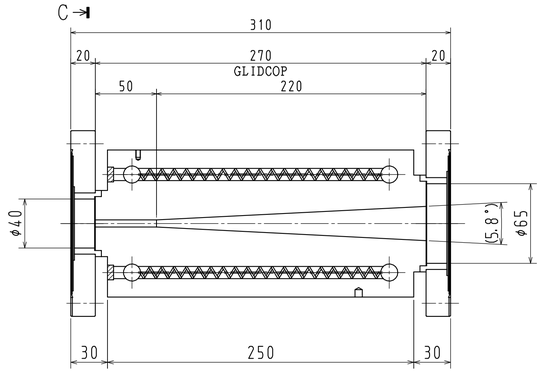

A-A SECTION
S=1/2.5

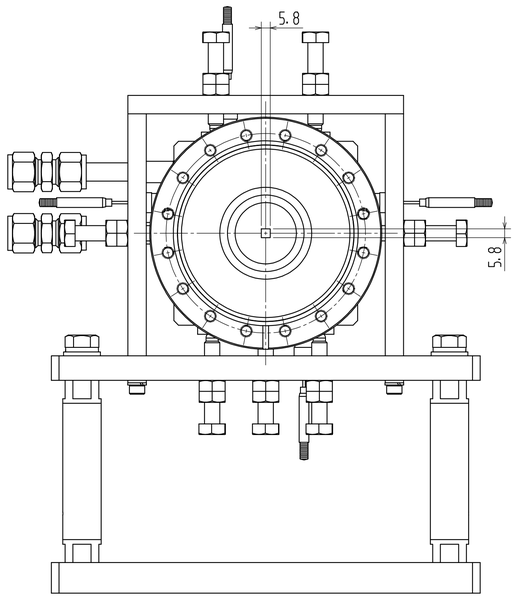

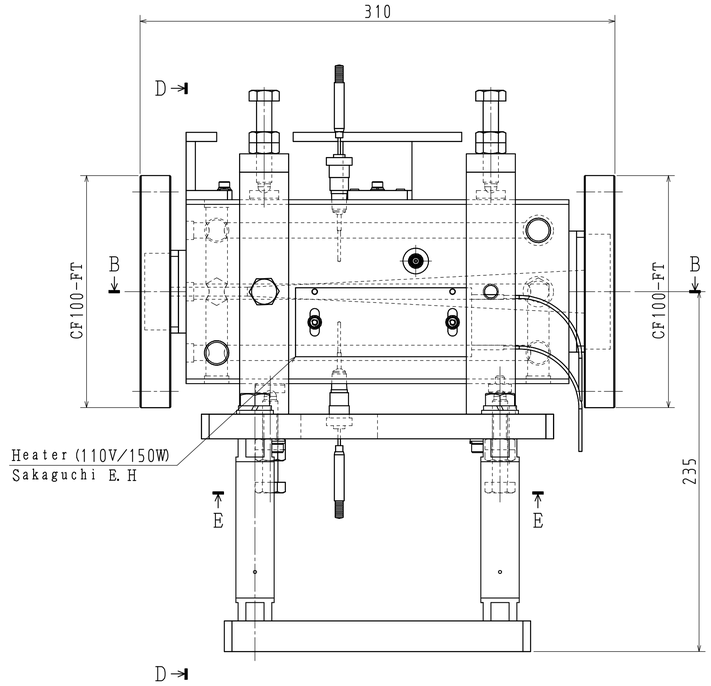

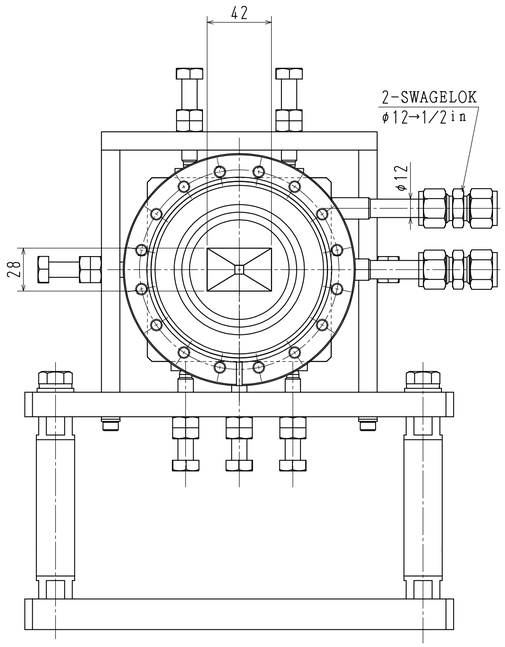

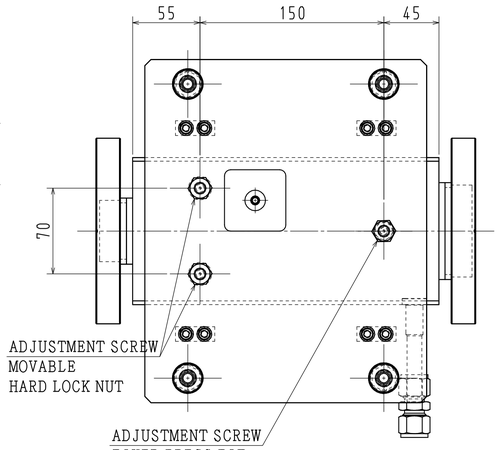

E-E SECTION
S=1/2.5

WEIGHT:
MASK:35kg

REV	MODIFICATION	DATE	MOD/BY
3	TC Position, Total length and Swagelok spec.	16/Nov/2015	S.Watanabe
2	Revision of Aperture dimension	06/Nov/2015	S.Watanabe
1	Dimension of Glicop and Water flow pass, Hardrock nut is used		
	For Position Adjustment Screw	27/Oct/2015	S.Watanabe

CHECKED BY	DESIGNED BY	DRAWN BY	UNIT:mm
Akiyama	Watanabe	Watanabe	
16/Nov/2015	16/Nov/2015	16/Nov/2015	

TOYAMA co.,ltd

TITLE: FXI Fixed Mask Assy.

SCALE: 1:2

DWG No. 1AB-01504 3

ICD

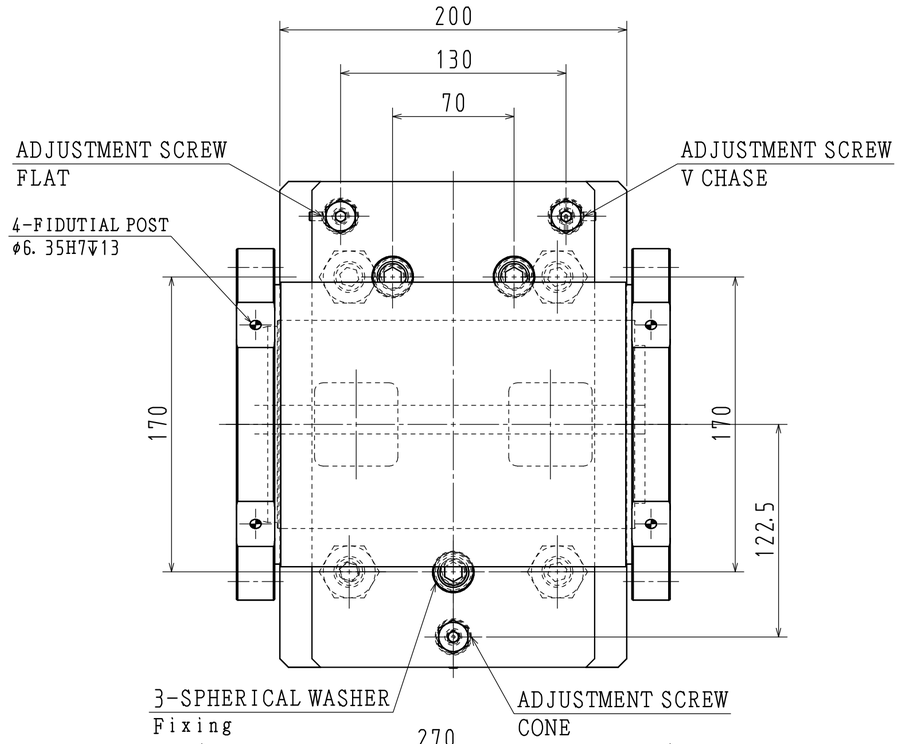

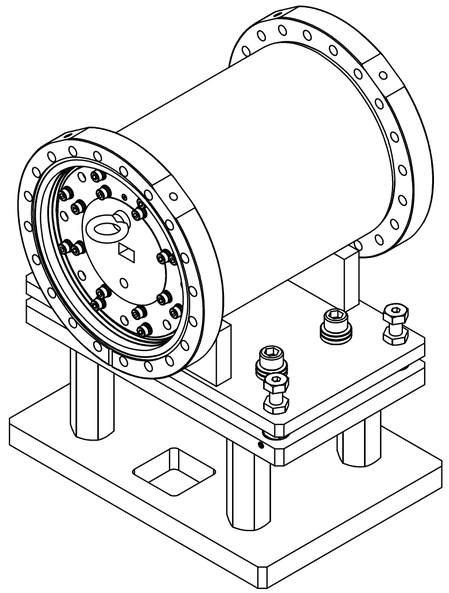

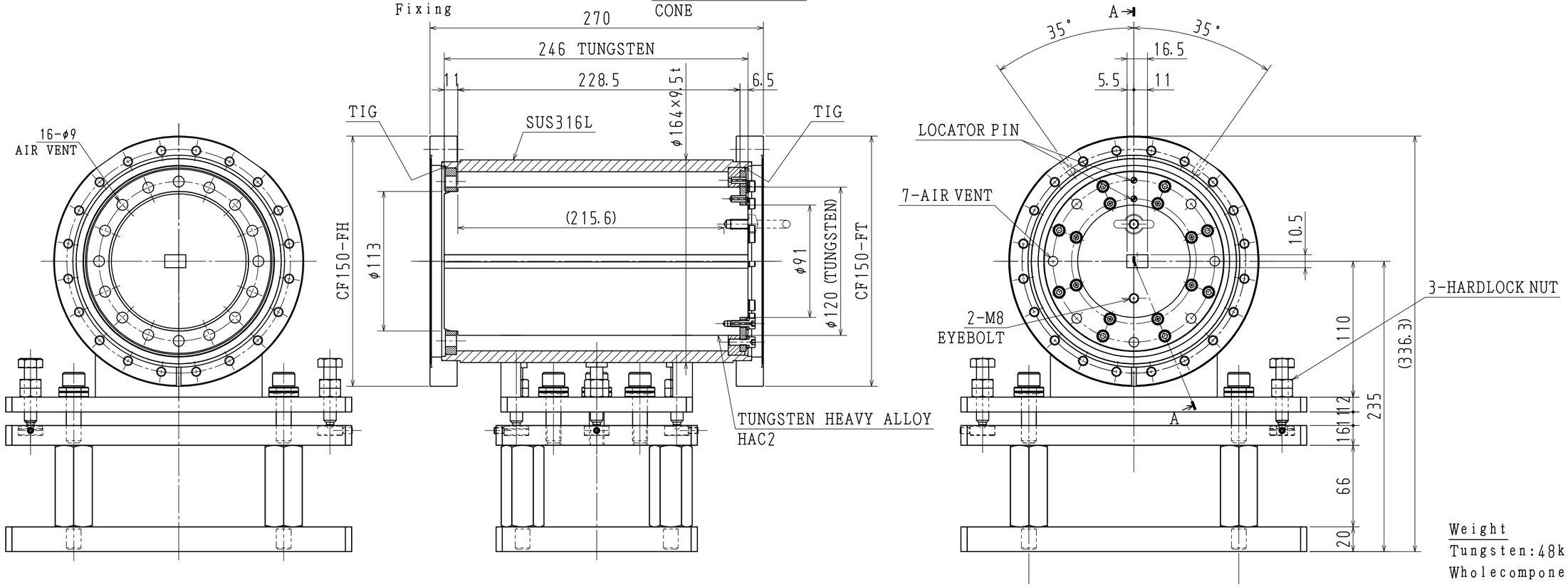

A-A SECTION

Weight
Tungsten:48kg
Wholecomponent:82kg

REV	MODIFICATION	DATE	MOD/BY
2	Diameter of Tungsten, Hardlock nut is used	17/Nov/2015	S.Watanabe
1	Aperture position and Diameter of Tungsten,	27/Oct/2015	S.Watanabe

CHECKED BY	DESIGNED BY	DRAWN BY	UNIT:mm
Akiyama	Watanabe	Watanabe	
17/Nov/2015	17/Nov/2015	17/Nov/2015	

TOYAMA co.,Ltd

SCALE 1:2.5

TITLE
NSLSI/FXI Beamline
Bremsstrahlung Collimator

DWG No. 2AJ-00763 △2 ICAD

<Mechanical Adjustment>

Axis	Range	Resolution
Y	±10mm	2.0mm/rev. M16 metric coarse thread

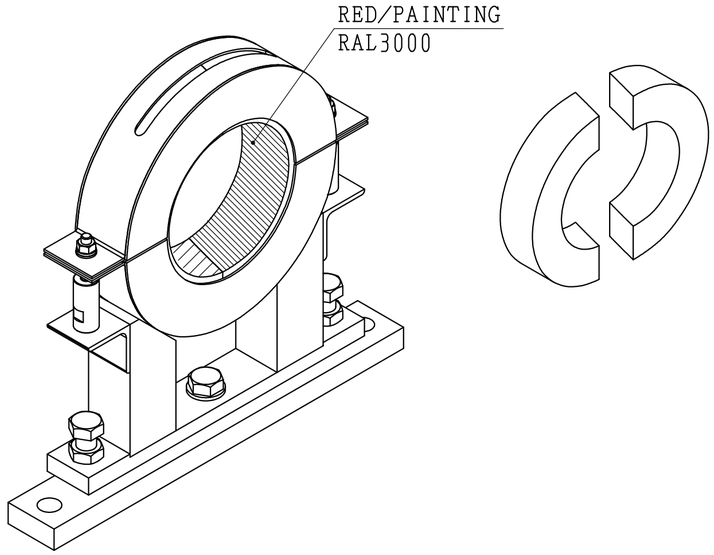

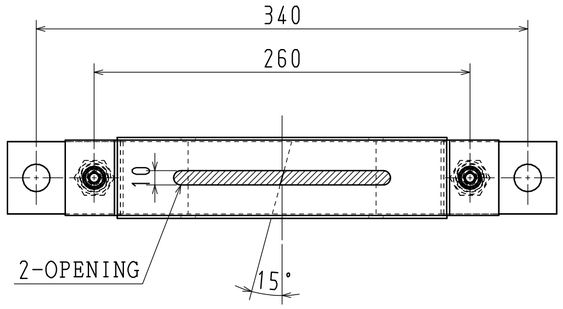

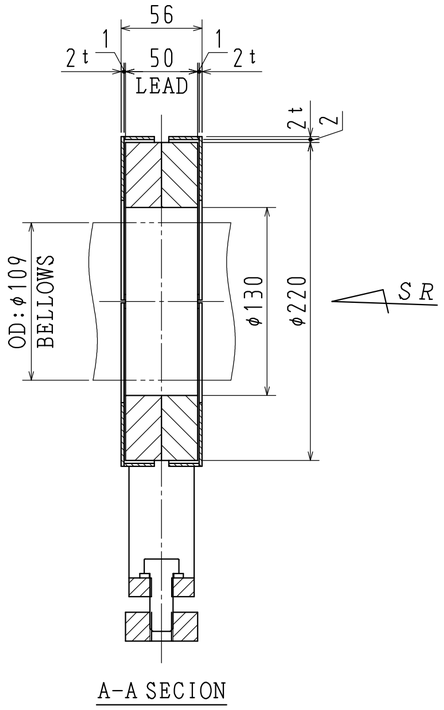

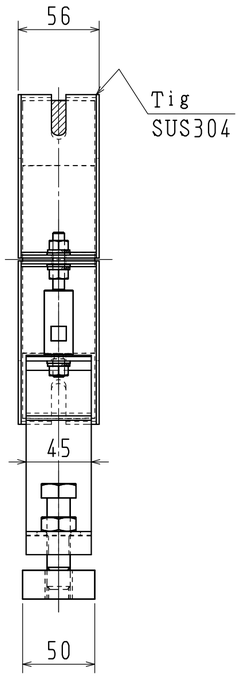

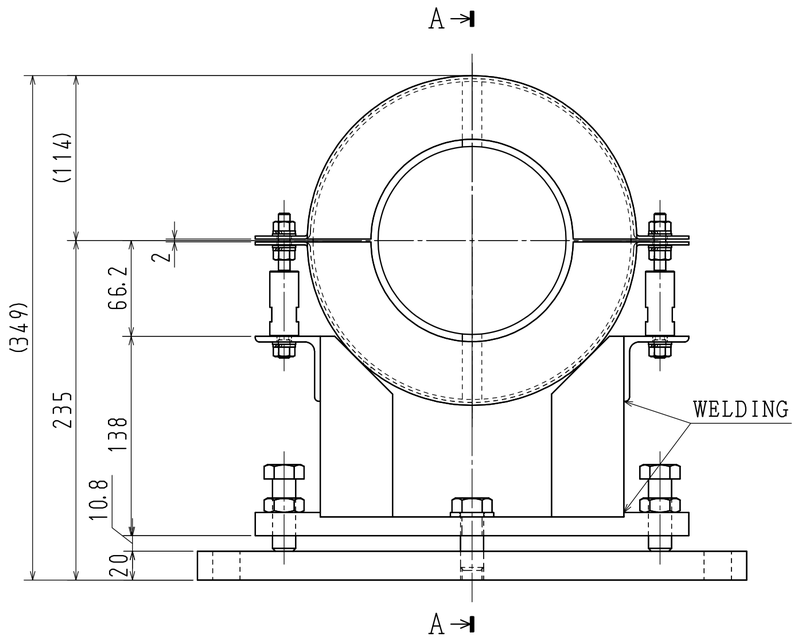

REV	MODIFICATION	DATE	MOD/BY

CHECKED BY	DESIGNED BY	DRAWN BY	UNIT:mm
Akiyama	Watanabe	Watanabe	
16/Nov/2015	16/Nov/2015	16/Nov/2015	

TOYAMA co.,Ltd

TITLE: FXI SECONDARY BREMSSTRALUNG SHIELDEING0

SCALE: 1:3

DWG No.: 2AJ-00770 △0

ICAD

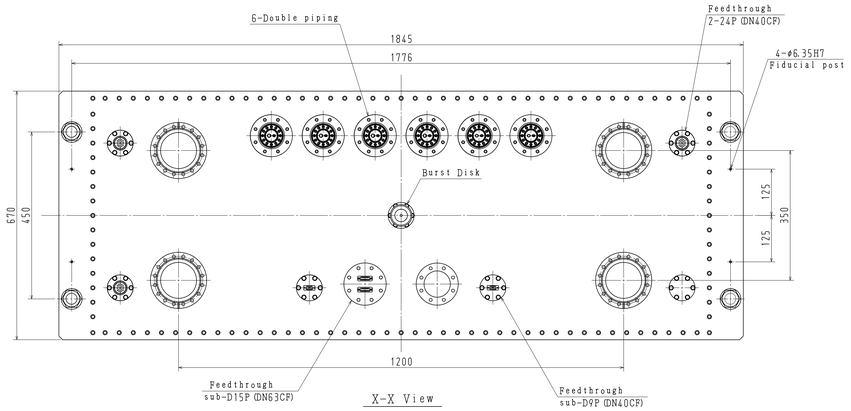

X-X View

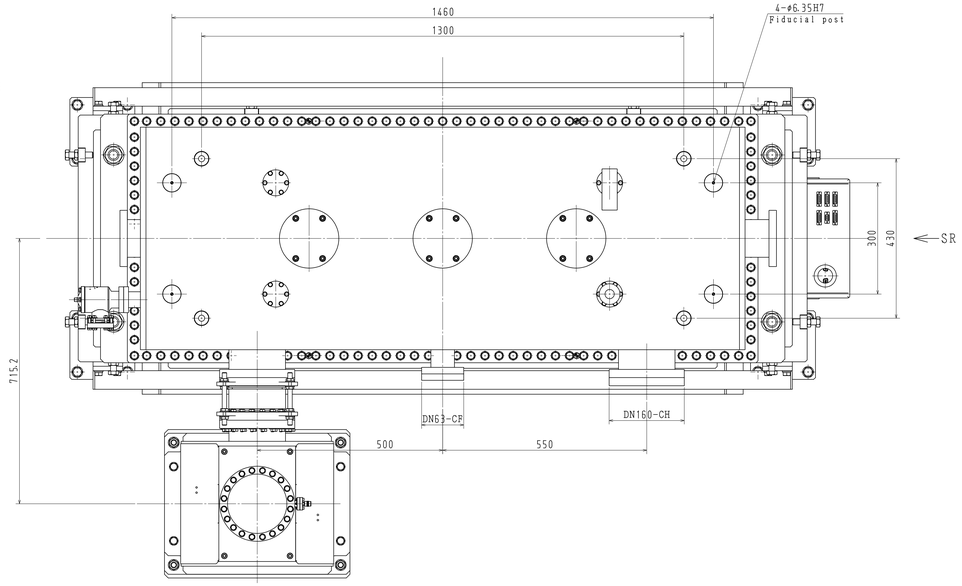

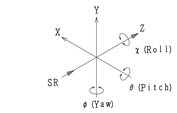

<Basic Cordinates>

<Mirror manual alignments>

Axis	Range	Resolution
X	±15mm	2mm/rev
Y	±6mm	0.3mm/rev
Y'	±24mm	Shims
Z	±15mm	2mm/rev

<Chamber manual alignments>

Axis	Range	Resolution	Adjutment tool
X	±15mm	2mm/rev	Screw (M16×2mm)
Y	±20mm	3.5mm/rev	Screw (M30×3.5mm)
Z	±15mm	2mm/rev	Screw (M16×2mm)

<Mirror motion specifications>

Axis	Range	Resolution	Repeatability	resolution (Encoder)	Actuator
X	±25mm	0.1μm	100μm	10nm	Motor
Y	−10mm~2mm	0.025μm	10μm	10nm	Motor
θ (pitch)	0.1~10mrad	0.0215μrad	1μrad	8.594nrad	Motor (Y1&Y2, Y3)
γ (roll)	±20mrad	0.074μrad	60μrad	29.5nrad	Motor (Y2&Y3)
φ (yaw)	±20mrad	0.086μrad	2mrad	8.594nrad	Motor

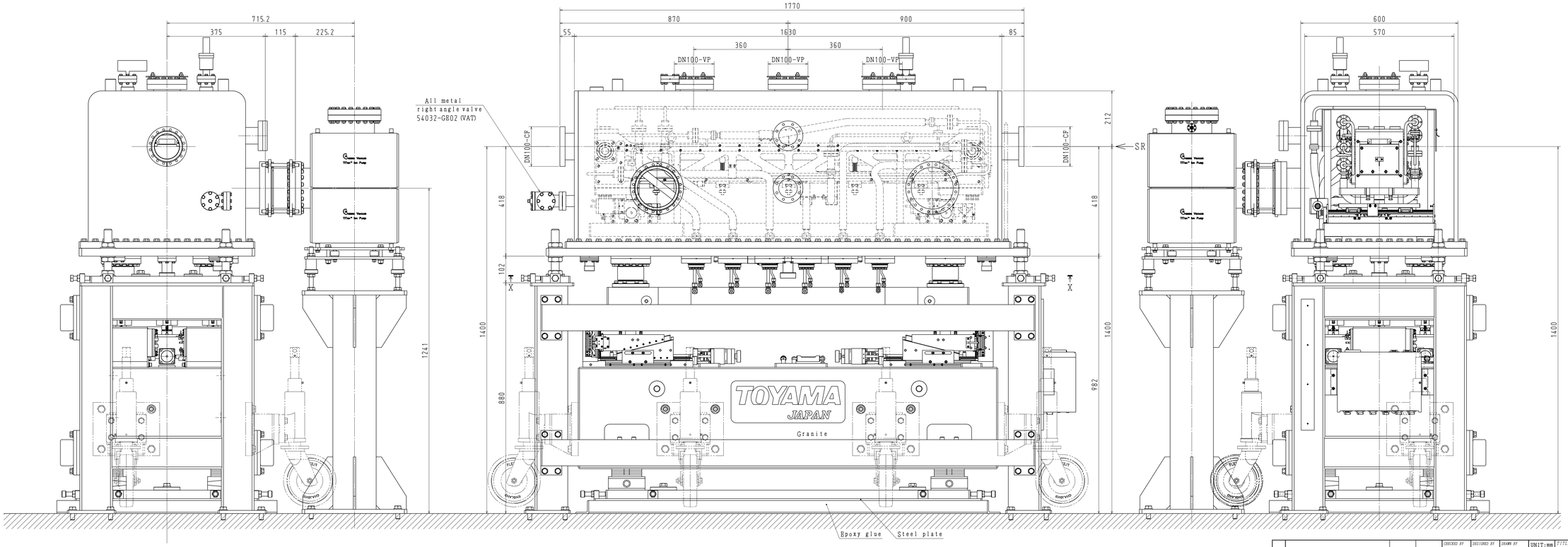

				CHECKED BY	DESIGNED BY	DRAWN BY	UNIT: mm	TITLE
				Hatanaka	Akiyama	Mori		NSLSL/FXI Beamline Collimating Mirror Assy
				20/Aug/2015	19/Aug/2015	19/Aug/2015		
REV	MODIFICATION	DATE	MOD/BY	TOYAMA co.,ltd			SCALE 1:5	DWG No. 0AB-01047

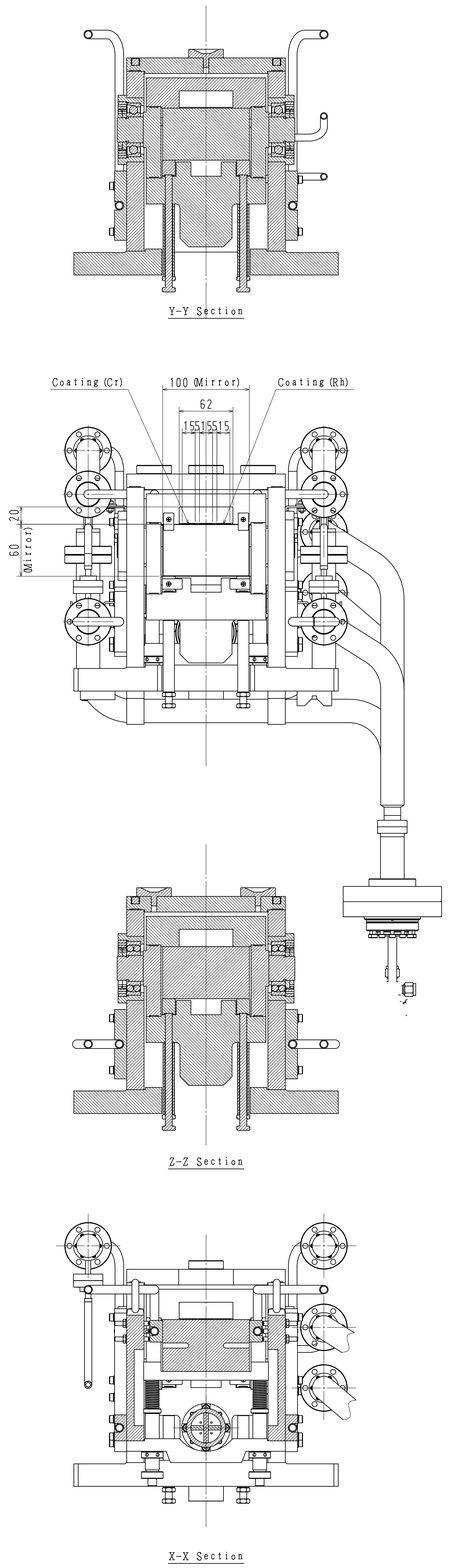

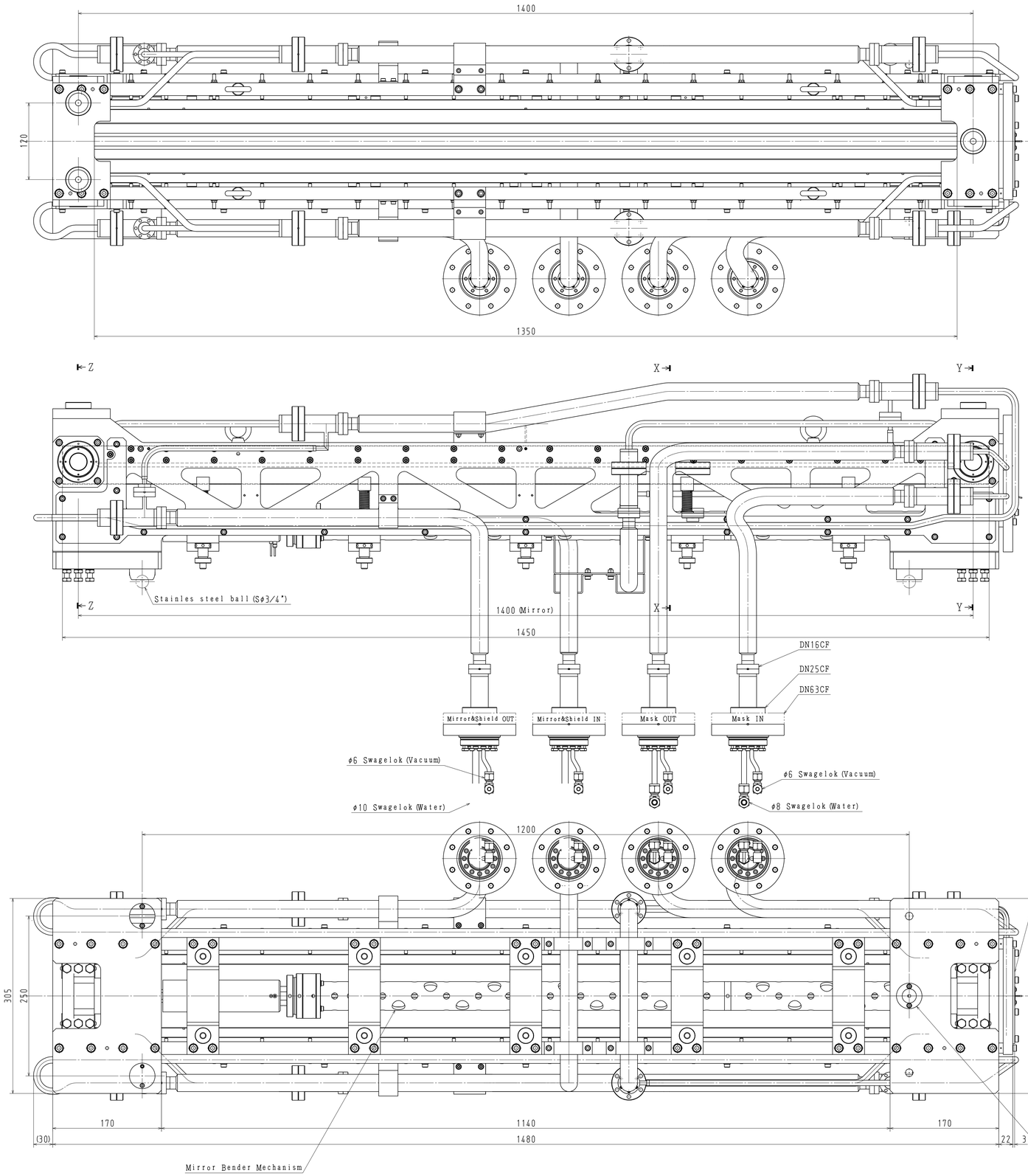

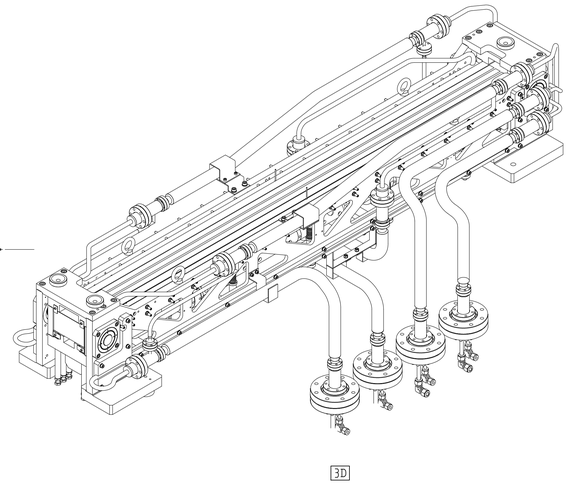

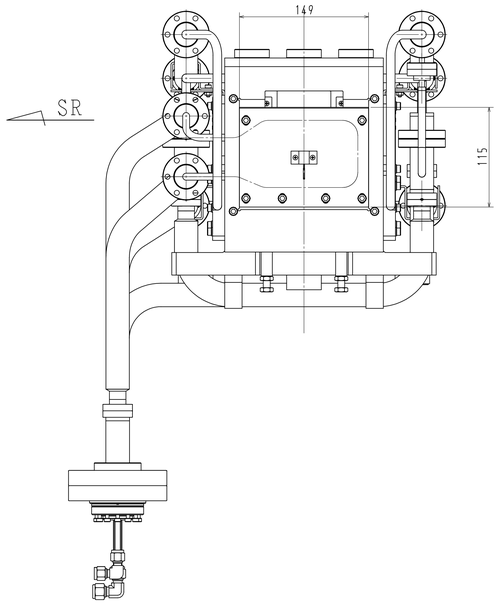

				CHECKED BY	DESIGNED BY	DRAWN BY	UNIT:mm	TITLE
				Hatanaka	Akiyama	Mori		NSLS1/PXI Beamline Collimating Mirror Holder
				20/Aug/2015	19/Aug/2015	19/Aug/2015		
REV	MODIFICATION	DATE	MOD/BY	TOYAMA co.,ltd			SCALE 1:2.5	DWG No. OAG-00245

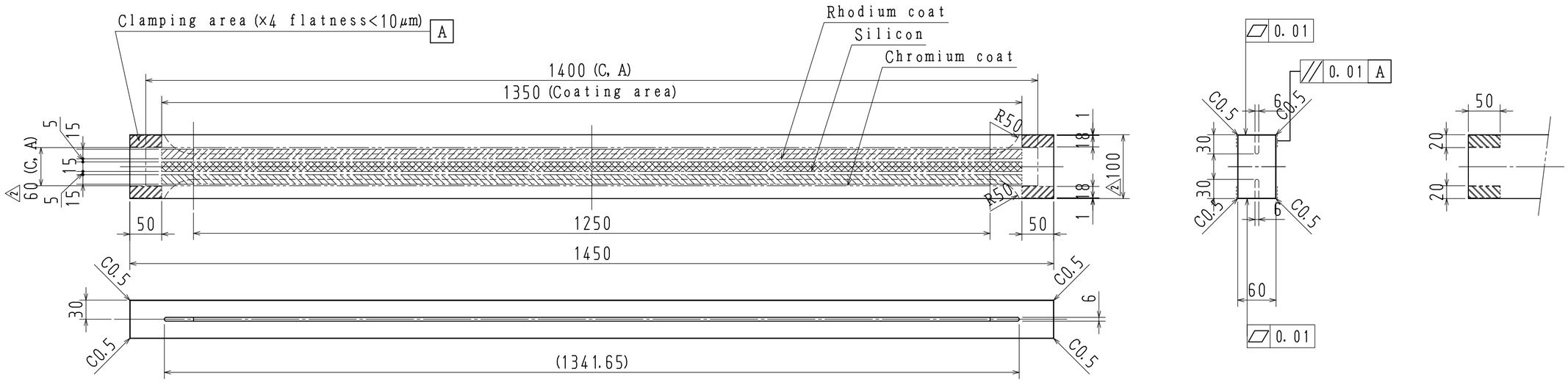

Collimating mirror optical specifications

Mirror material	Single crystal silicon
Material resistivity	≤10 ohm-cm
Reflecting surfaces	Chromium, silicon, rhodium. The rhodium part of the mirror shall be coated with a 60nm ±10nm thick rhodium layer. A 12.5nm ±2.5nm thick chromium binder layer shall be used between the silicon and the rhodium coating. The chr_omium part of the mirror shall be coated with 60nm ±10nm thick chromium layer.
Minimum active area for each stripe (Si, Cr or Rh)	1350mm×15mm; there shall be a minimum of 2mm and a maximum of 5mm separation between the active areas.
Mirror dimensions	1450 (L) ×100mm (W) ×60mm (T)
Figure (unbent, reflecting surface)	Planar. Tangential radius> 30Km; Sagital radius 3Km
Surface roughness (reflecting surface)	≤0.3nm rms
Tangential slope error (unbent, reflecting surface, no beam)	≤1μrad rms (freq range L-1 to 0.5mm-1)
Sagital figure error (unbent, reflecting surface, no beam)	≤20μrad rms (freq range W-1 to 0.5mm-1)
Surface finish (reflecting surface)	No visible defects or scratches. strain free chamical-mechnical polish.
General finish	All mirror edges shall be chamfered or rounded.
Reference	This mirror will bend a radius in the tangential direction from flet to 5Km.

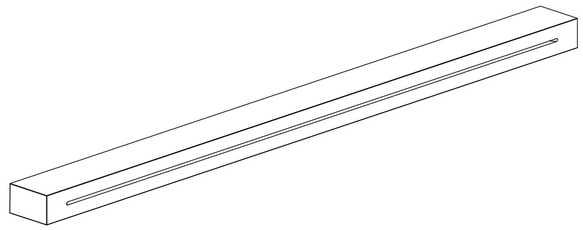

REV	MODIFICATION	DATE	MOD/BY	CHECKED BY	DESIGNED BY	DRAWN BY	UNIT: mm	TITLE NSLS-II FXI Photon Delivery System Collimating mirror
				Hatanaka	Akiyama	Akiyama		
				05/Nov/2015	05/Nov/2015	05/Nov/2015		
				TOYAMA co.,Ltd			SCALE 1:5	DWG No. 2JG-00848 △1 ICAD

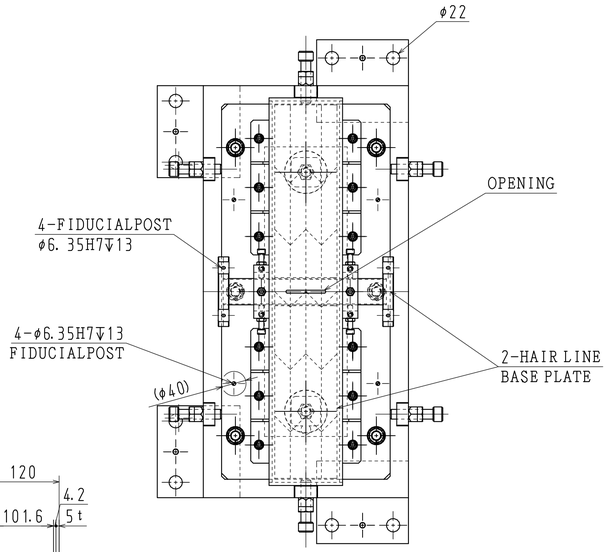

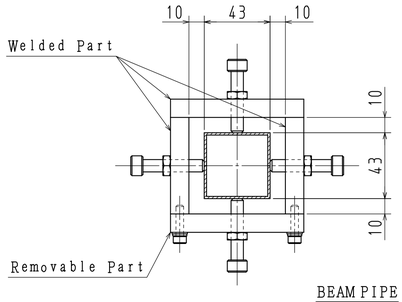

BEAM PIPE
S=1/2

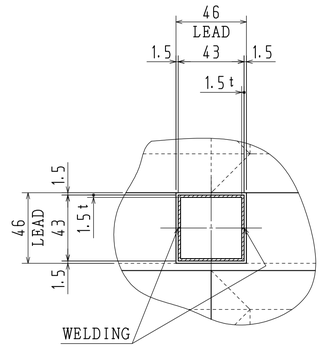

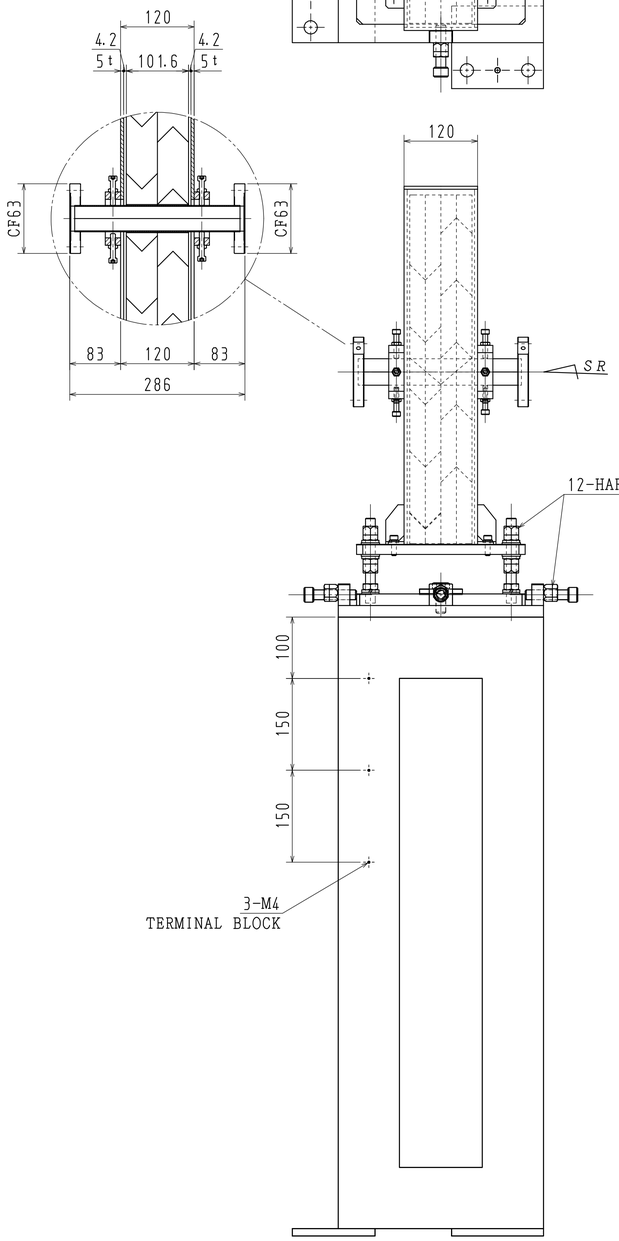

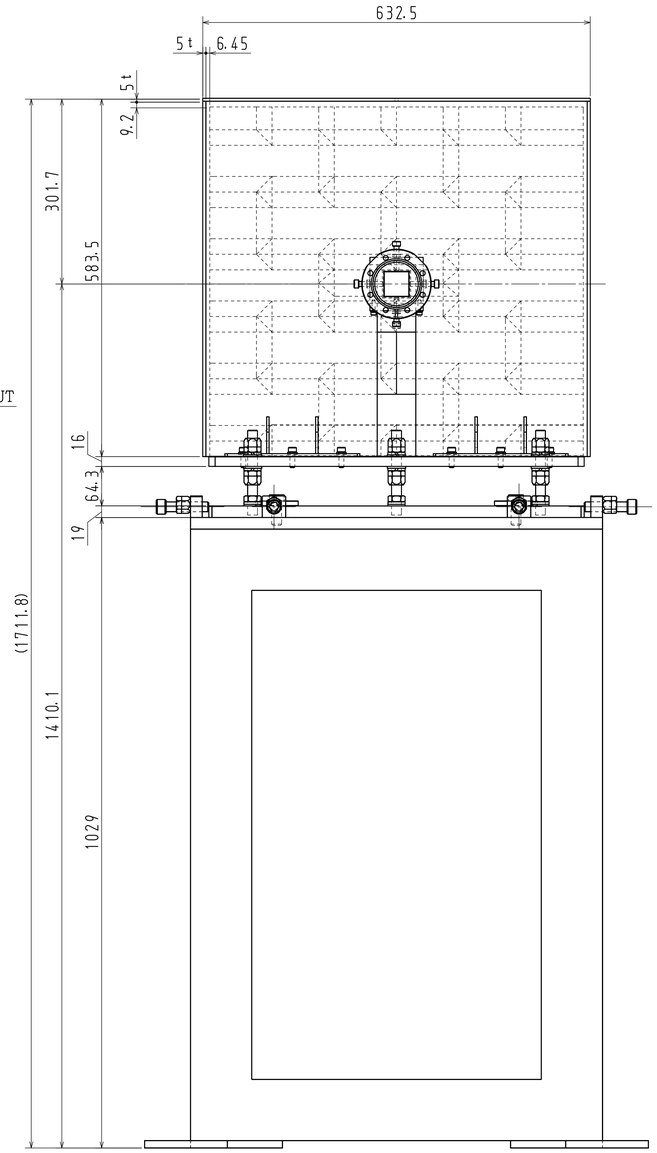

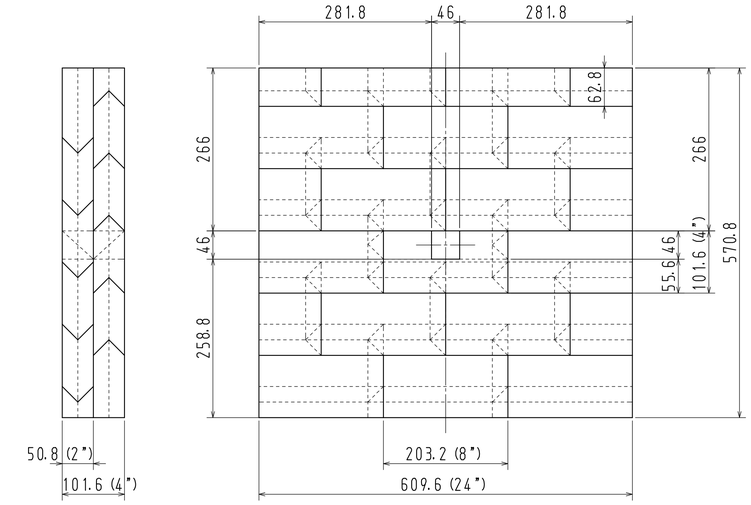

LEAD BRICK
S=1/5

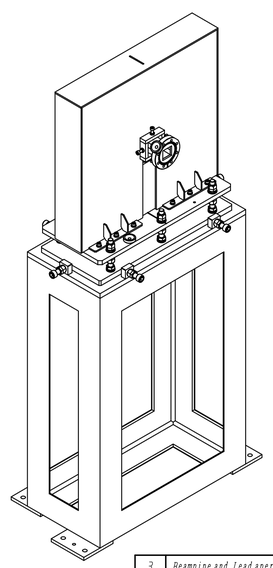

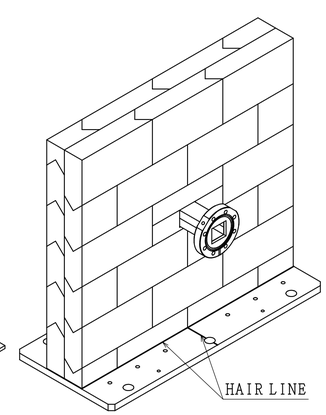

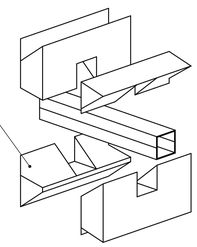

WEIGHT
LEAD BLOCK:400kg
WHOLE COMPONENT:600kg

REV	MODIFICATION	DATE	MOD/BY
3	Beampipe and Lead aperture dimension	24/Nov/2015	S.Watanabe
2	Fiducialpost and hair line is on base plate, Hardlock nut		
	Beampipe and Lead brick dimension	17/Nov/2015	S.Watanabe
1	Beampipe and Lead brick dimension, Fiducialpost	28/Oct/2015	S.Watanabe

CHECKED BY	DESIGNED BY	DRAWN BY	UNIT:mm
Akiyama	Watanabe	Watanabe	
24/Nov/2015	24/Nov/2015	24/Nov/2015	

TOYAMA co.,ltd

SCALE 1:5

TITLE FXI
SECONDARY BREMSSTRALUNG SHIELDEINGI

DWG No. 1AJ-00505 3

ICD

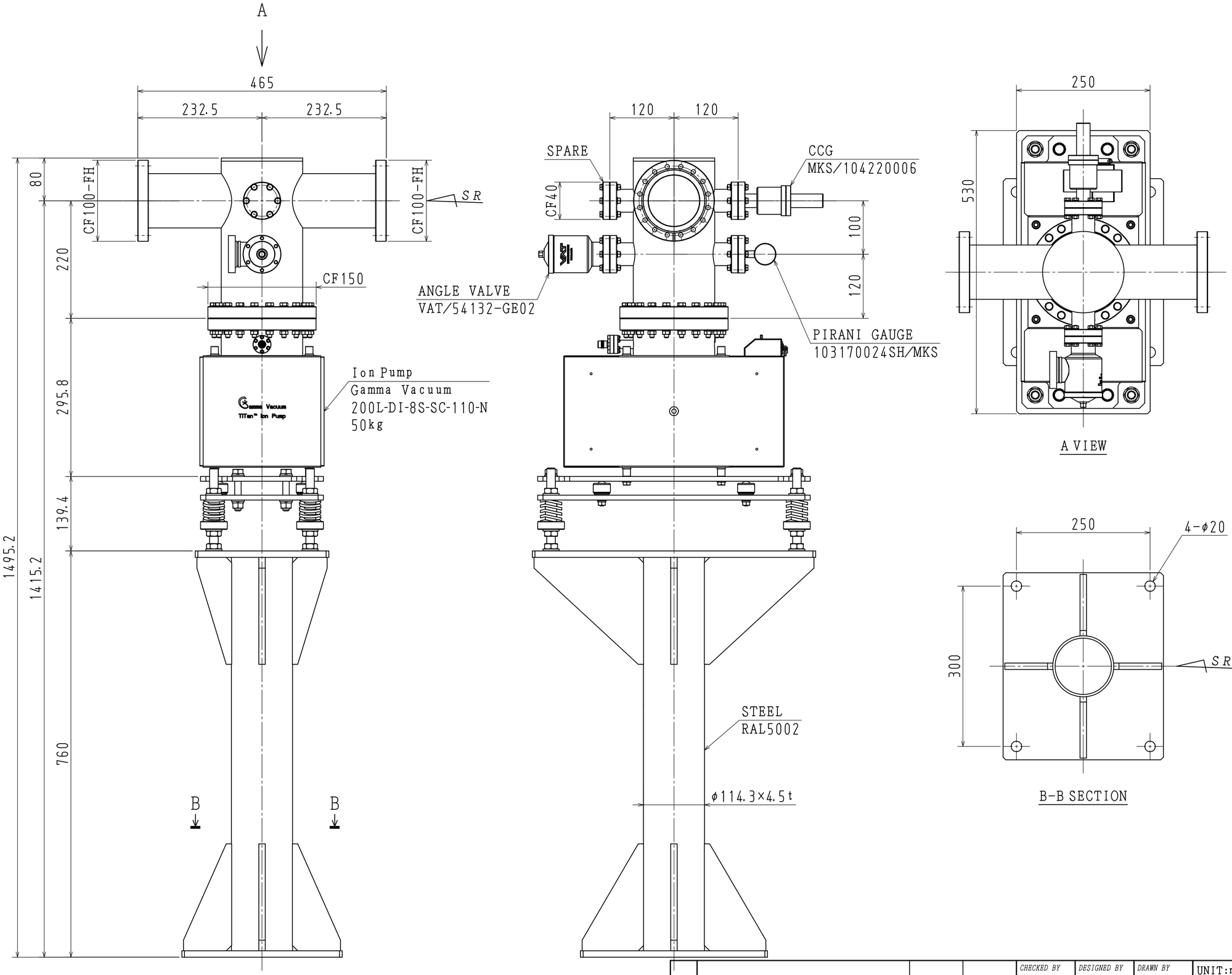

REV	MODIFICATION	DATE	MOD/BY
1	Port length	27/Nov/2015	S.Watanabe

CHECKED BY	DESIGNED BY	DRAWN BY
Akiyama	Watanabe	Watanabe
27/Nov/2015	27/Nov/2015	27/Nov/2015

UNIT: mm

TOYAMA co.,Ltd

SCALE 1:5

TITLE
NSLSⅡ/FXI
Pumping Station

DWG No. 2AB-00453 △1

ICAD

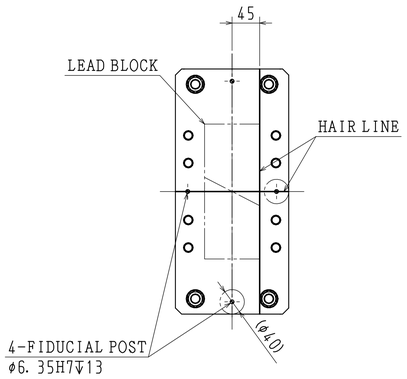

C-C SECTION

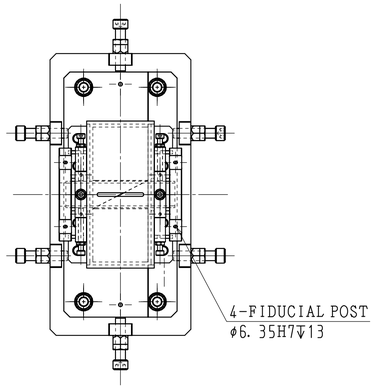

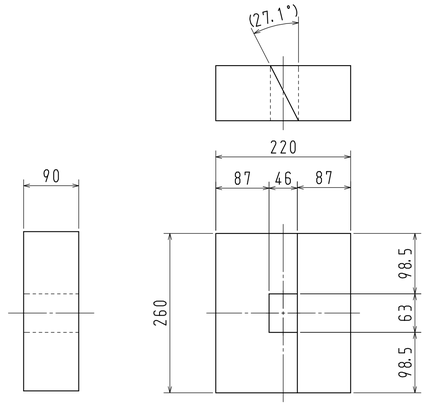

LEAD BLOCK
S=1/5

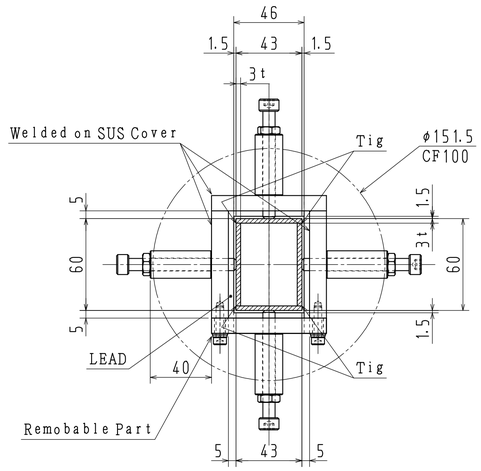

B-B SECTION
S=1/2

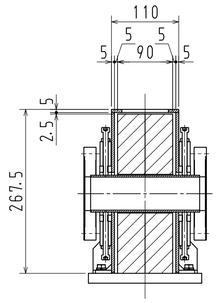

A-A SECTION

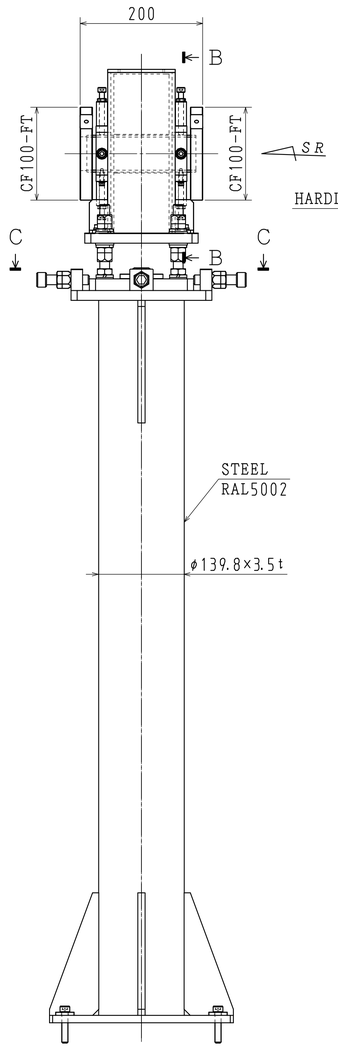

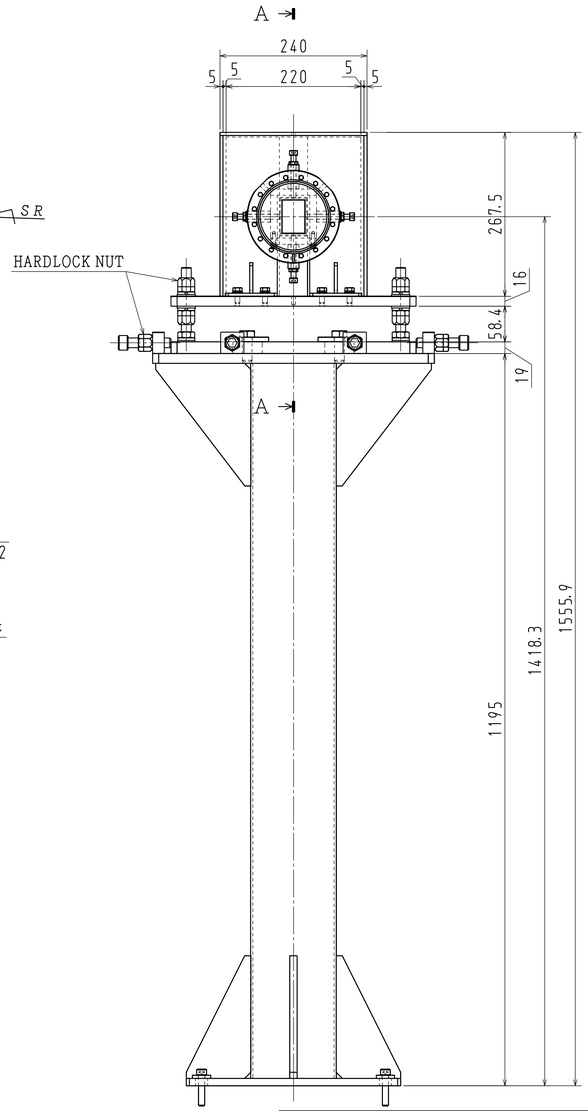

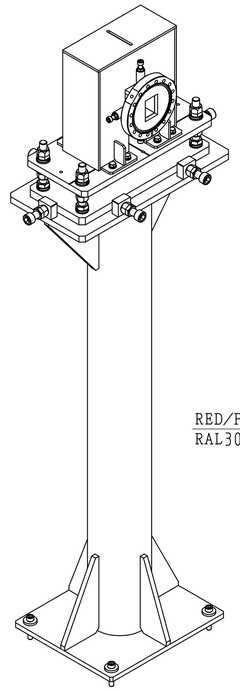

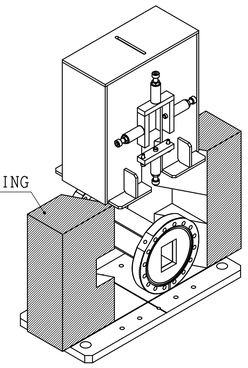

WEIGHT
LEAD BLOCK:55kg
WHOLE COMPONENT:138kg

REV	MODIFICATION	DATE	MOD/BY	REV	MODIFICATION	DATE	MOD/BY
				3	Hair line and Fiducial post are on baseplate	17/Nov/2015	S.Watanabe
				2	Beampipe and Aperture Dimension and its position	06/Nov/2015	S.Watanabe
				1	Beampipe and Aperture Dimension, Suppoort Structure, Fiducial post	28/Oct/2015	S.Watanabe
4	Beampipe and Aperture Dimension and its position	24/Nov/2015	S.Watanabe				

CHECKED BY	DESIGNED BY	DRAWN BY	UNIT:mm	TITLE
Akiyama	Watanabe	Watanabe		FXI SECONDARY BREMSSTRALUNG SHIELDEING I
24/Nov/2015	24/Nov/2015	24/Nov/2015		

TOYAMA co.,ltd

SCALE 1:5

DWG No. 1AJ-00506 4

ICD

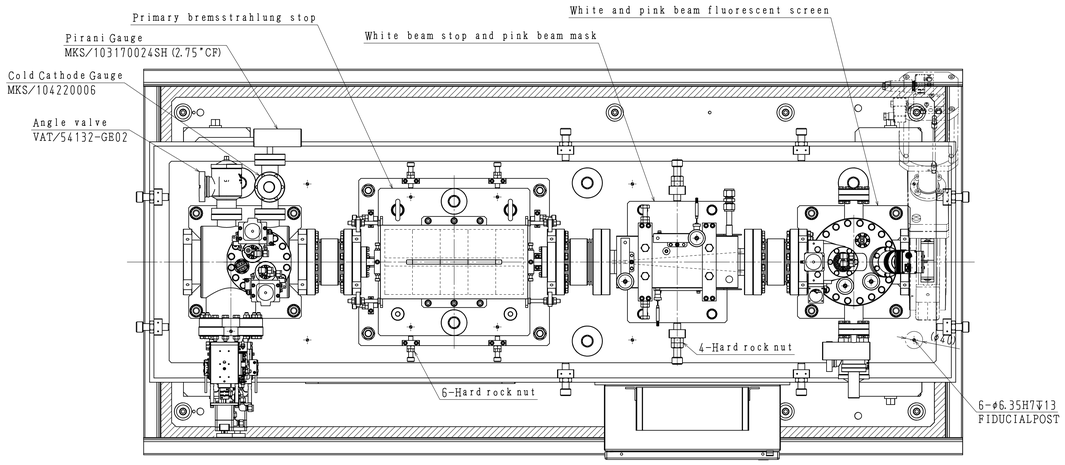

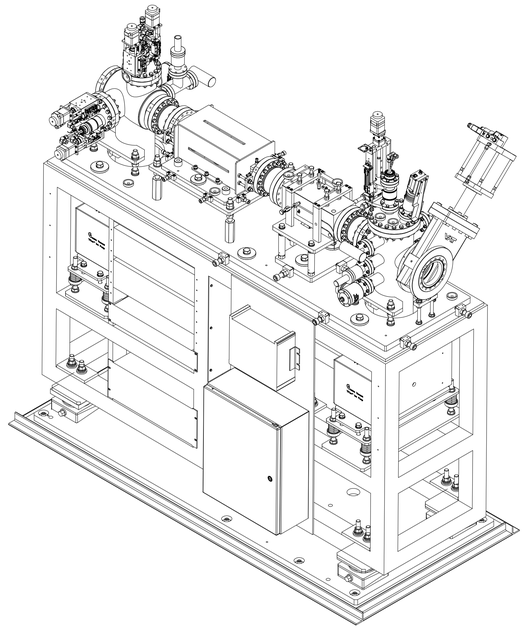

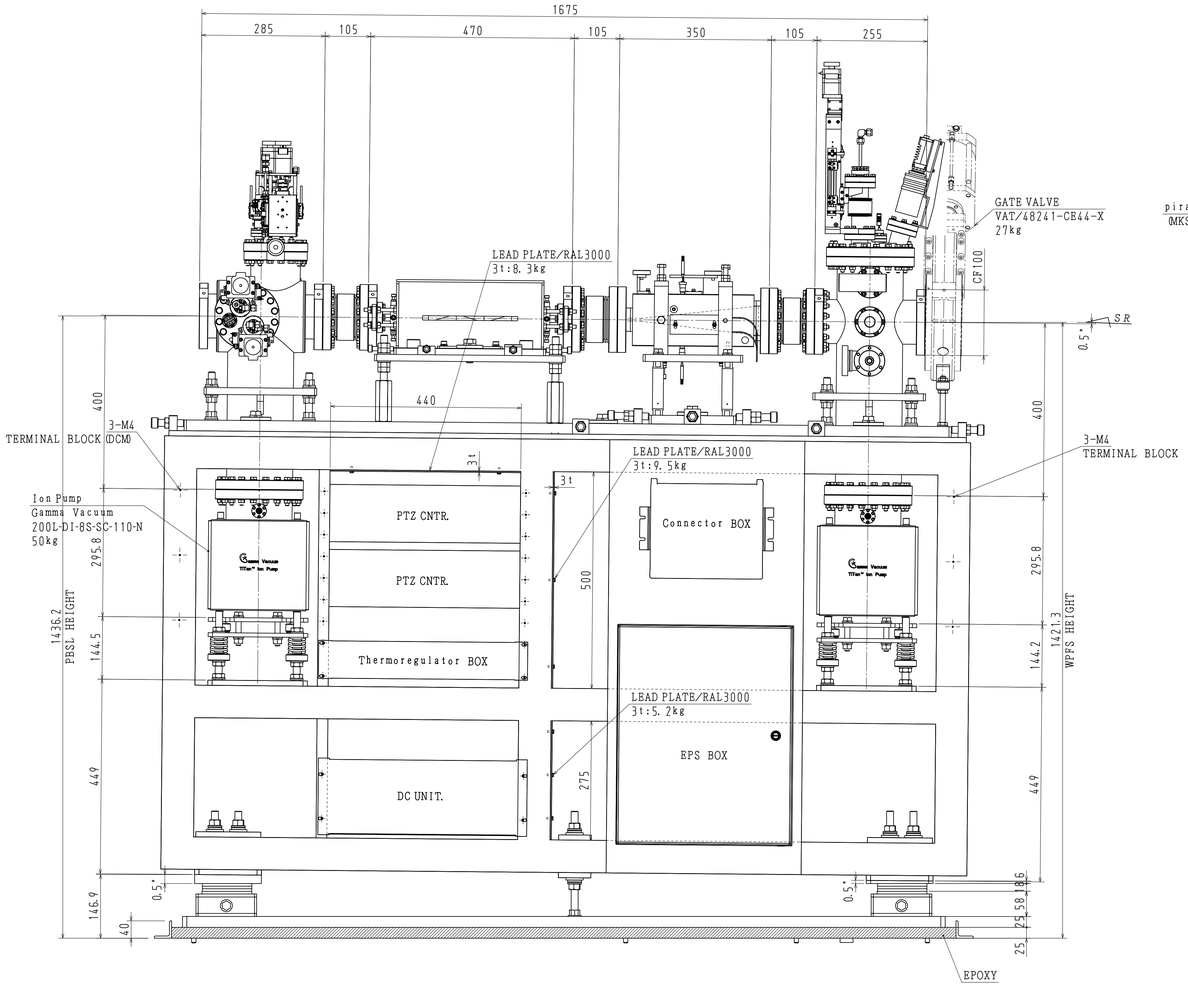

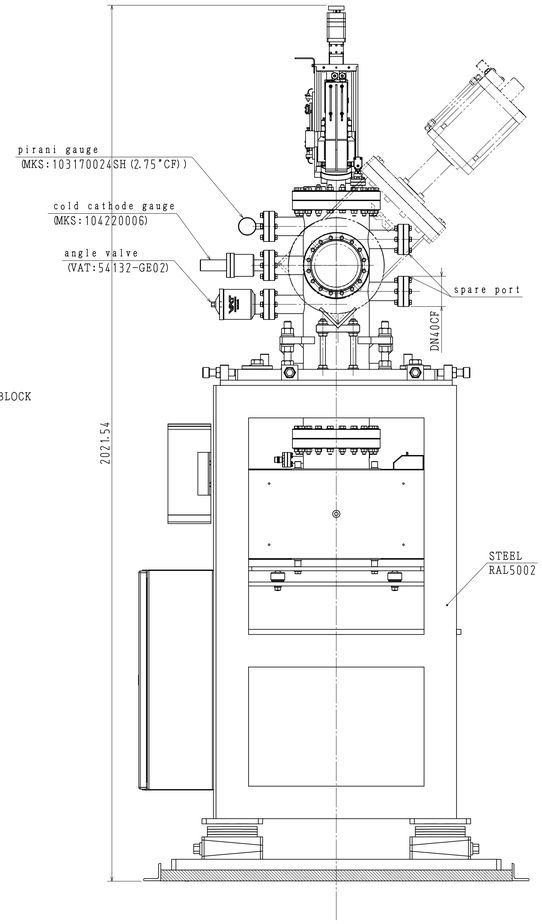

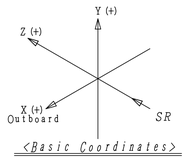

<Basic Coordinates>

<Manual Adjustment Mechanism>

	Axis	Range	Resolution	note
WPFS Chamber	Y	±15mm	2mm/rev.	M16 metric coarse thread
WBS+PBM	X	±15mm	2mm/rev.	M16 metric coarse thread
	Y	± 5mm	1.5mm/rev.	M10 metric coarse thread
	Z	±15mm	2mm/rev.	M16 metric coarse thread
Primary Brems Stop	X	±10mm	1.5mm/rev.	M10 metric coarse thread
	Y	±10mm	2mm/rev.	M16 metric coarse thread
	Z	±10mm	1.5mm/rev.	M10 metric coarse thread
PBSL	Y	±15mm	2mm/rev.	M16 metric coarse thread
Whole Components (adjustment plate)	X	±15mm	2mm/rev.	M16 metric coarse thread
	Z	±15mm	2mm/rev.	M16 metric coarse thread
Support Structure (leveling block)	Y	±24mm	0.3mm/rev. 6mm/pcs.	Leveling block ±6mm Shim plate 6mm×3pcs.

REV	MODIFICATION	DATE	MOD/BY	REV	MODIFICATION	DATE	MOD/BY
4	Rearrangement of each components, support structure	24/Nov/2015	S.Watanabe	2	Rearrangement of each components, support structure	06/Nov/2015	S.Watanabe
3	CNTR. BOXs and lead plates are installed, Rearrangement of each components			1	Rearrangement of each components, support structure, Hardlock nut is used for position adjustment screws of FM		
		19/Nov/2015	S.Watanabe			28/Oct/2015	S.Watanabe

CHECKED BY	DESIGNED BY	DRAWN BY	UNIT:mm	TITLE
Akiyama	Watanabe	Watanabe		NSLSI/FXI Beamline WPFS & WSTPM Unit Assy
24/Nov/2015	24/Nov/2015	24/Nov/2015		

TOYAMA co.,Ltd.

SCALE 1:5

DWG No. 0AB-01046 4 A

REV	MODIFICATION	DATE	MOD/BY
2	Rearrangement of each components, support structure	06/Nov/2015	S.Watanabe
1	Rearrangement of each components, support structure, Hardlock nut is used for position adjustment screws of FM		
		28/Oct/2015	S.Watanabe

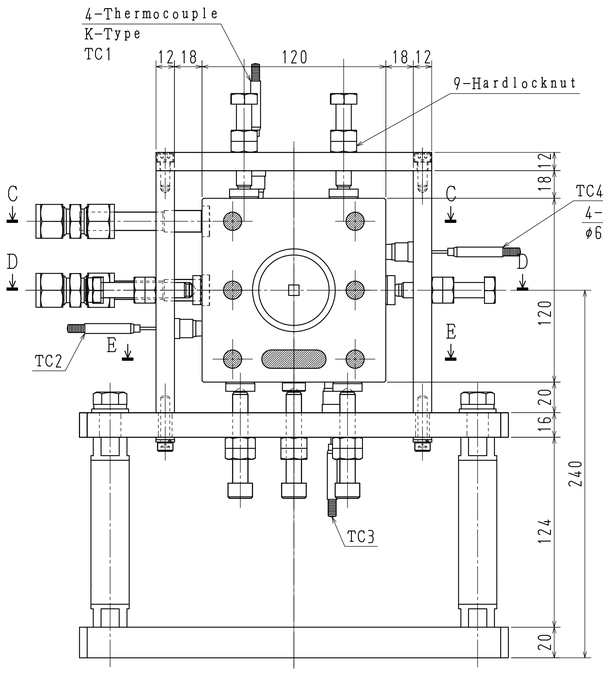

A-A SECTION

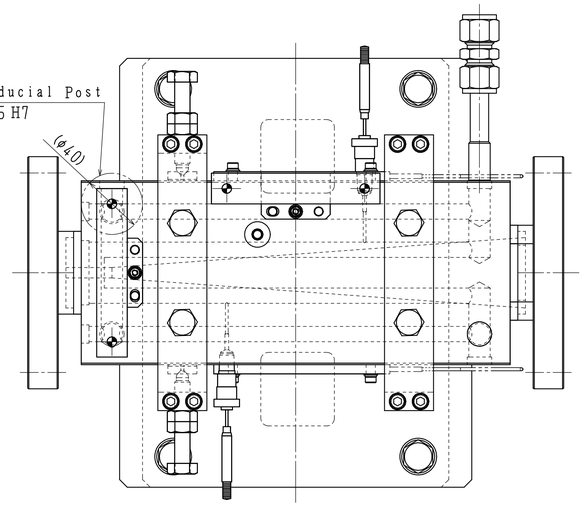

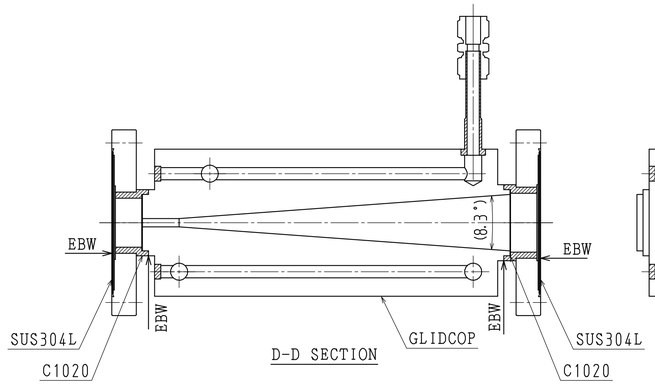

D-D SECTION

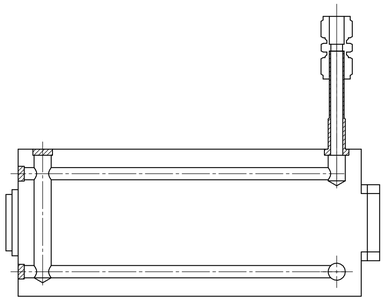

C-C SECTION

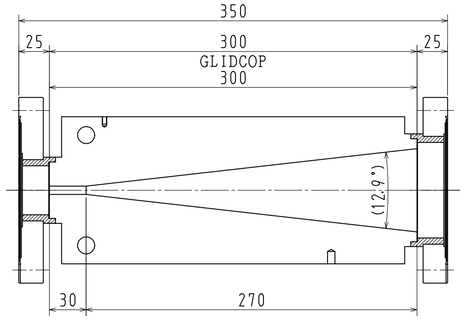

B-B SECTION

E-E SECTION

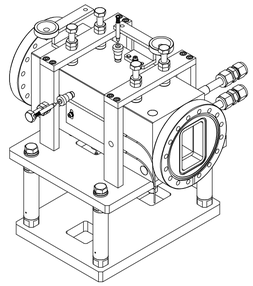

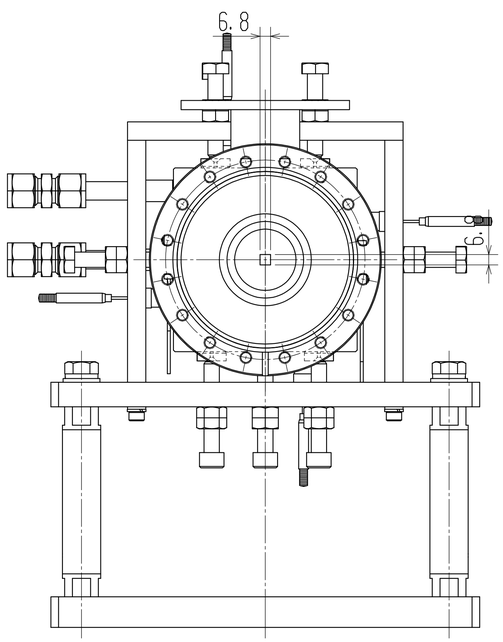

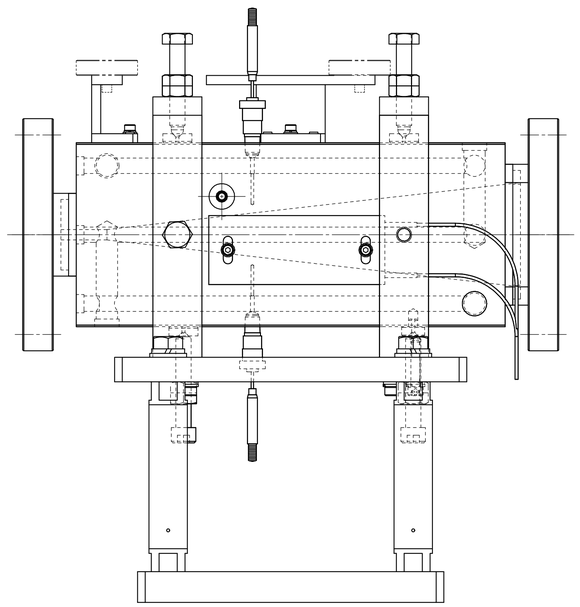

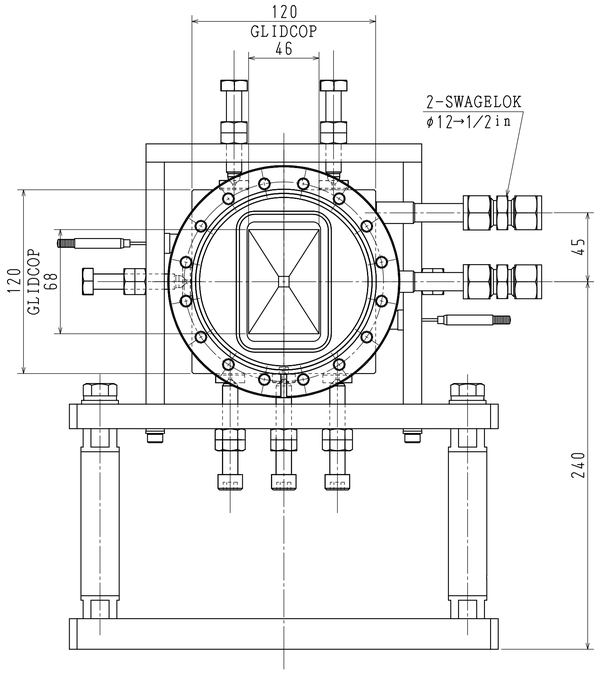

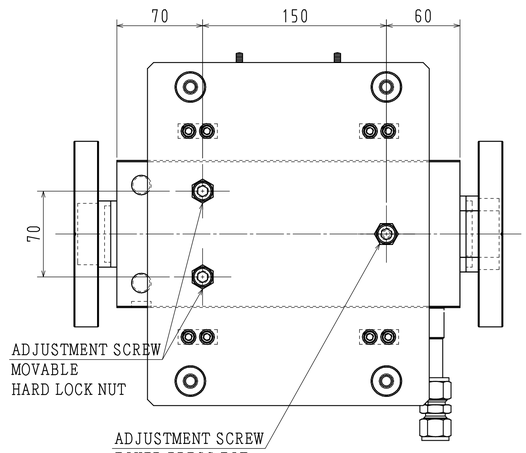

F-F SECTION
S=1/2.5

REV	MODIFICATION	DATE	MOD/BY
2	TC Positio and Swagelok spec.	16/Nov/2015	S.Watanabe
1	PBS and WBM are integrated,		
	Hardlock nut is used for position adjustment screws of FM		
		28/Oct/2015	S.Watanabe

CHECKED BY	DESIGNED BY	DRAWN BY	UNIT:mm
Akiyama	Watanabe	Watanabe	
16/Nov/2015	16/Nov/2015	16/Nov/2015	

TOYAMA co.,ltd

SCALE 1:2

TITLE FXI WBS&PBM Assy.

DWG No. 1AB-01505 △2

ICAD

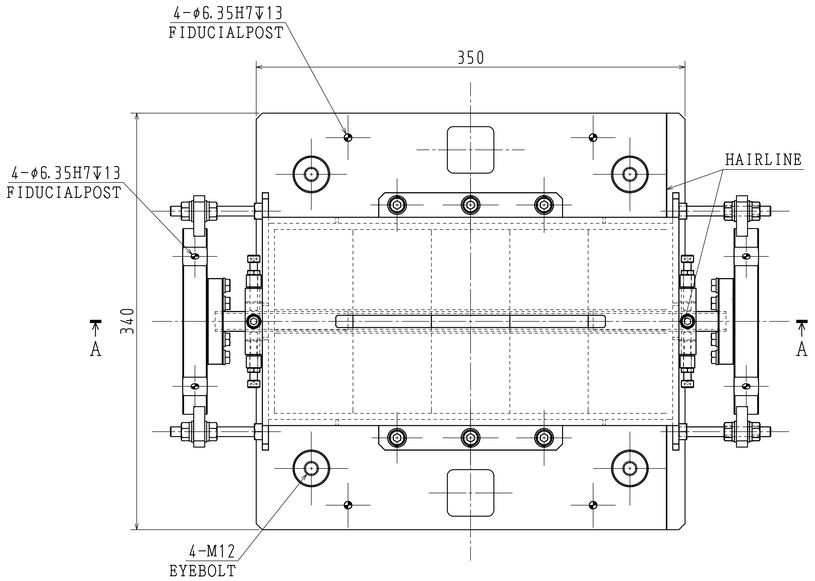

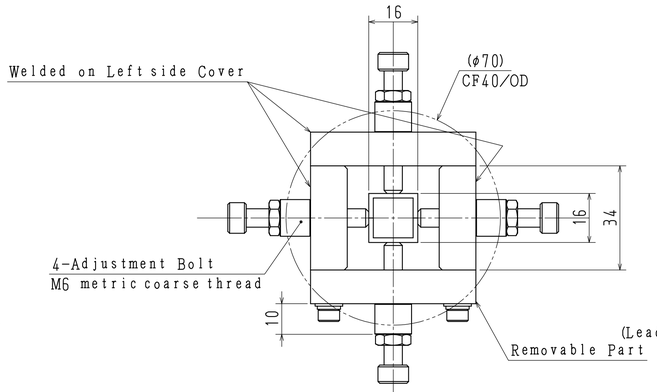

Beam Pipe Supporting Parts
B-B secsion (S=1/1)

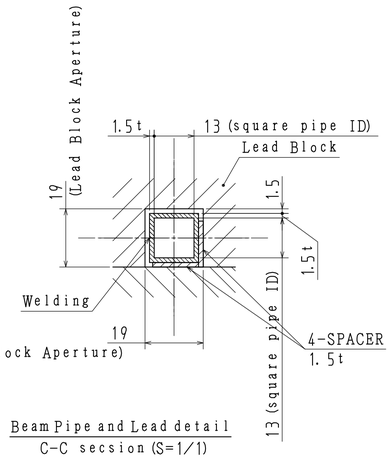

Beam Pipe and Lead detail
C-C secsion (S=1/1)

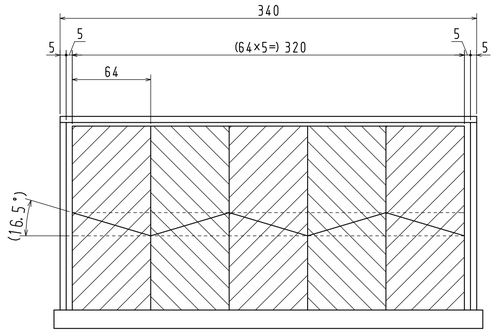

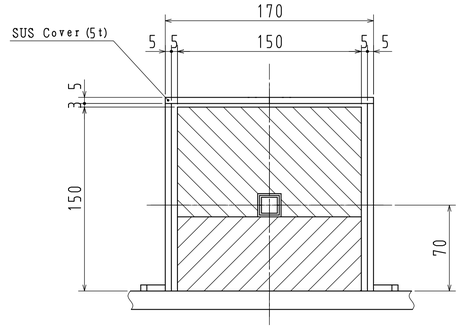

Lead Block
S=1/2.5

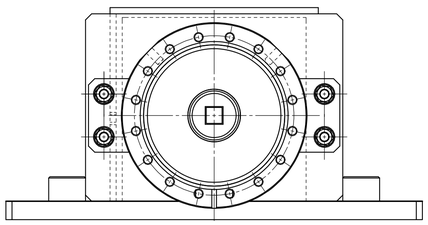

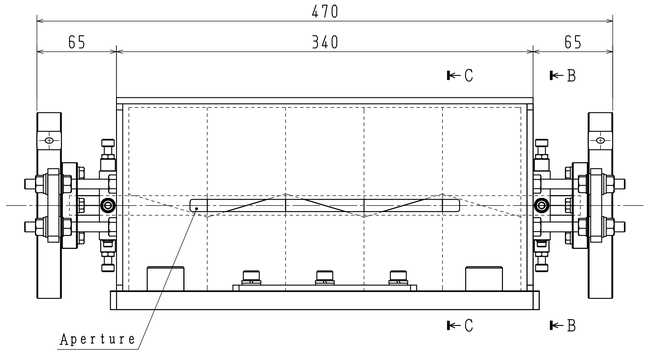

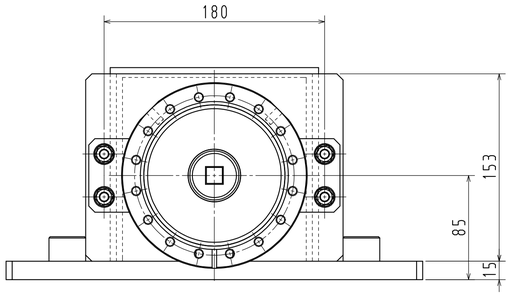

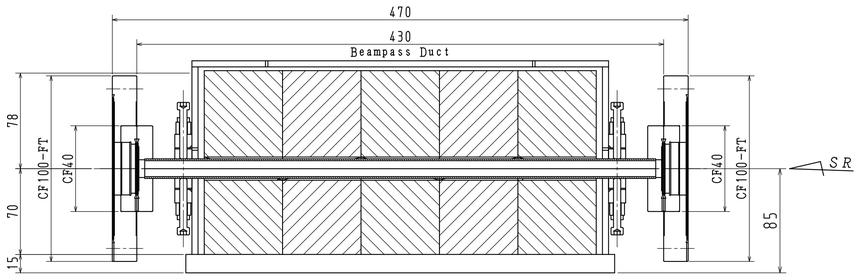

A-A SECTION

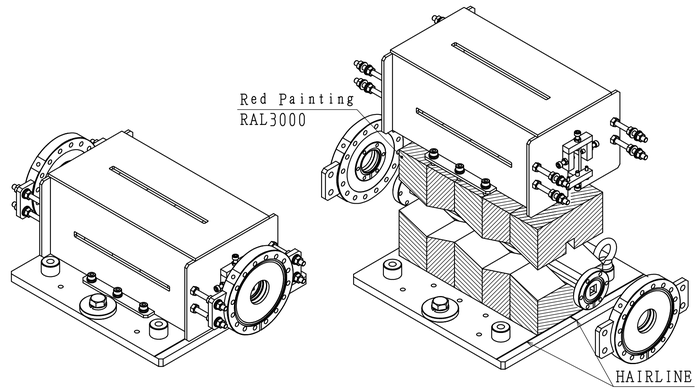

Weight
LEAD BLOCK:80kg
TOTAL:110kg

REV	MODIFICATION	DATE	MOD/BY
4	Beam Pipe dimension and its position	24/Nov/2015	S.Watanabe
3	Hairline and fiducialpost are on base plate, Dimensions of beampipe and lead aperture	17/Nov/2015	S.Watanabe
2	Beam Pipe dimension and its position	09/Nov/2015	S.Watanabe
1	Lead length and Beam Pipe dimension	14/Oct/2015	S.Watanabe

CHECKED BY	DESIGNED BY	DRAWN BY
Akiyama	Watanabe	Watanabe
22/Nov/2015	22/Nov/2015	22/Nov/2015

UNIT:mm

TITLE: FXI PRIMARY BREMSSTRAHLUNG STOP

TOYAMA co.,ltd

SCALE 1:2.5

DWG No. 1AJ-00507 (4) ICS

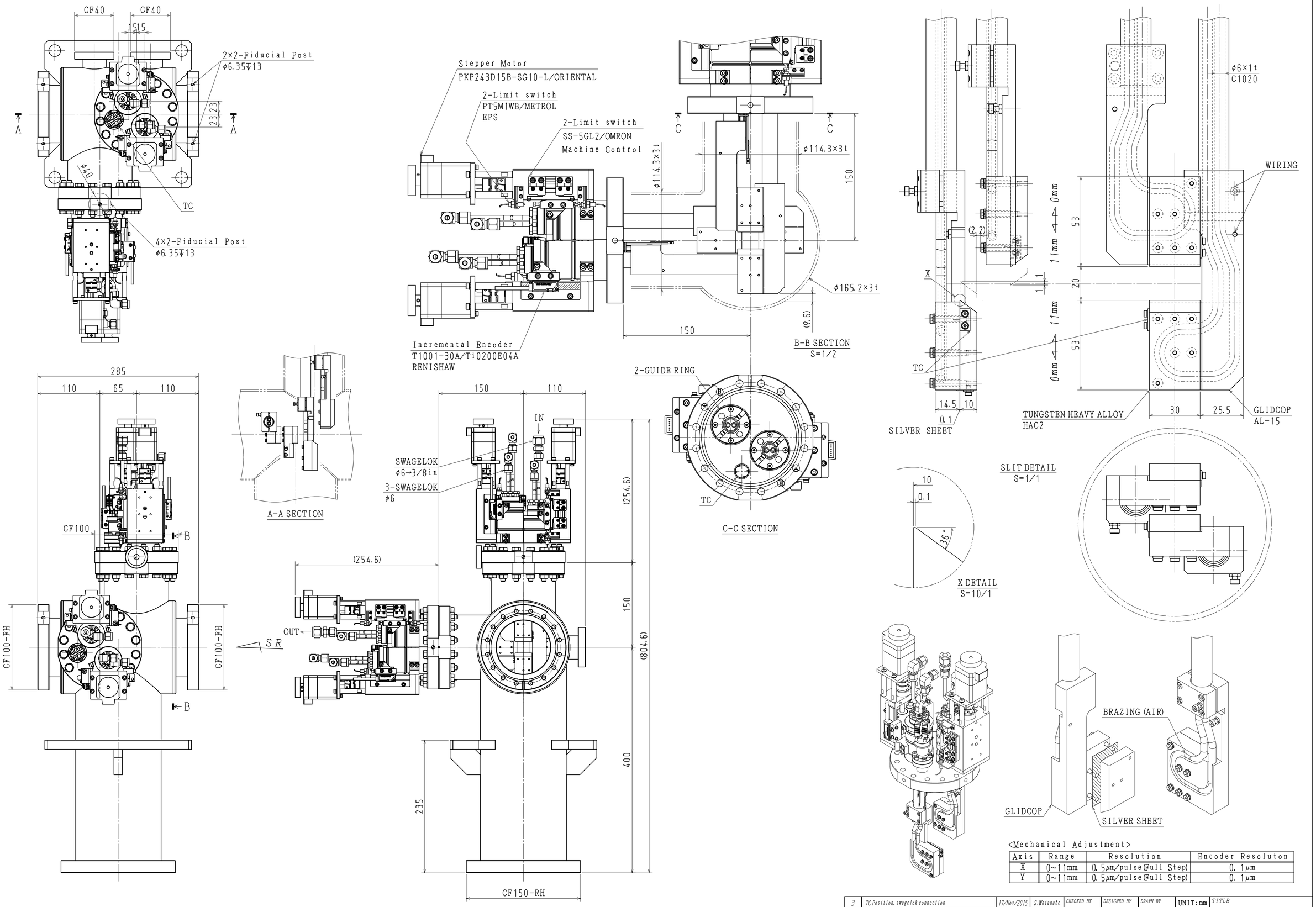

<Mechanical Adjustment>

Axis	Range	Resolution	Encoder Resoluton
X	0~11mm	0.5μm/pulse(Full Step)	0.1μm
Y	0~11mm	0.5μm/pulse(Full Step)	0.1μm

REV	MODIFICATION	DATE	MOD/BY
3	TC Position, swagelok connection	17/Nov/2015	S.Watanabe
2	Chamber length	06/Nov/2015	S.Watanabe
1	Brade dimension, Silver sheet is inserted, Addition of TC		
		28/Oct/2015	S.Watanabe

CHECKED BY	DESIGNED BY	DRAWN BY
Akiyama	Watanabe	Watanabe
17/Nov/2015	17/Nov/2015	17/Nov/2015

TOYAMA co.,LTD

UNIT: mm

TITLE: NSLSI/FXI Beamline Pink Beam Slits Chamber

SCALE: 1:3

DWG No. 1AG-01007 3

ICAD

REV	MODIFICATION	DATE	MOD/BY

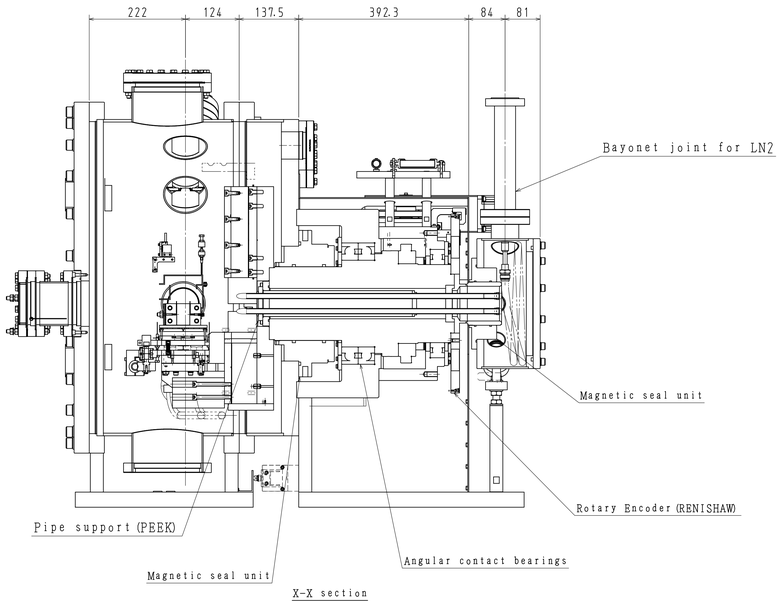

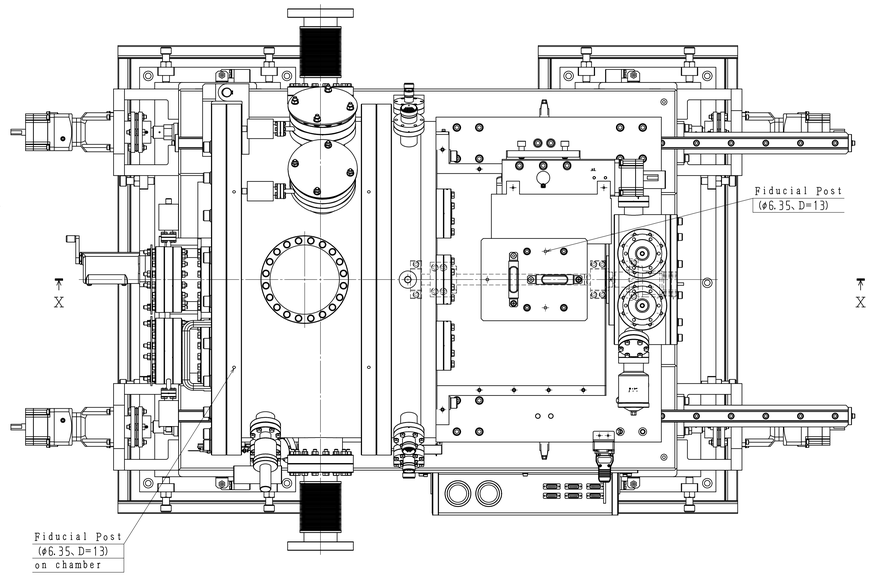

<Specifications>

Axis	Range	Resolution	Stepper Motor	Potentiometer	Resolution (Potentiometer)
X	±12mm	2.5μm/rev	PK264B2-SG10	LP-50F	0.1mm
Y	±9mm	0.03μm/step	PK296DB		

Approximate Weight:3600kgf

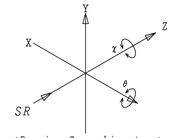

<Basic Coordinates>

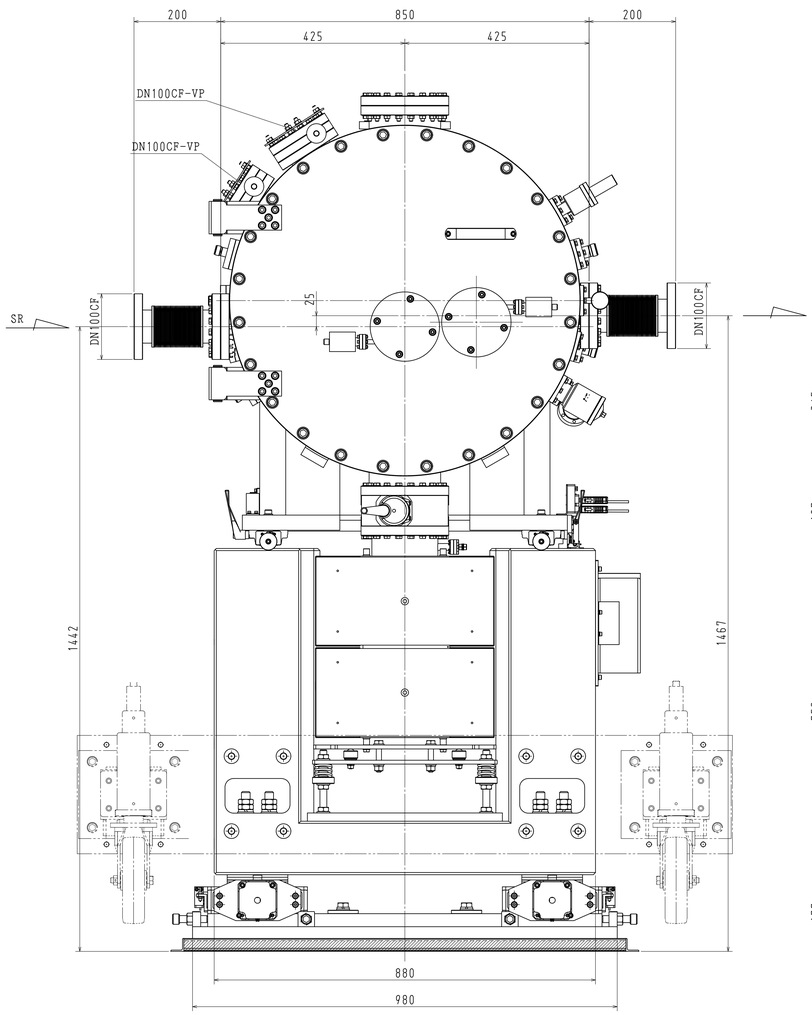

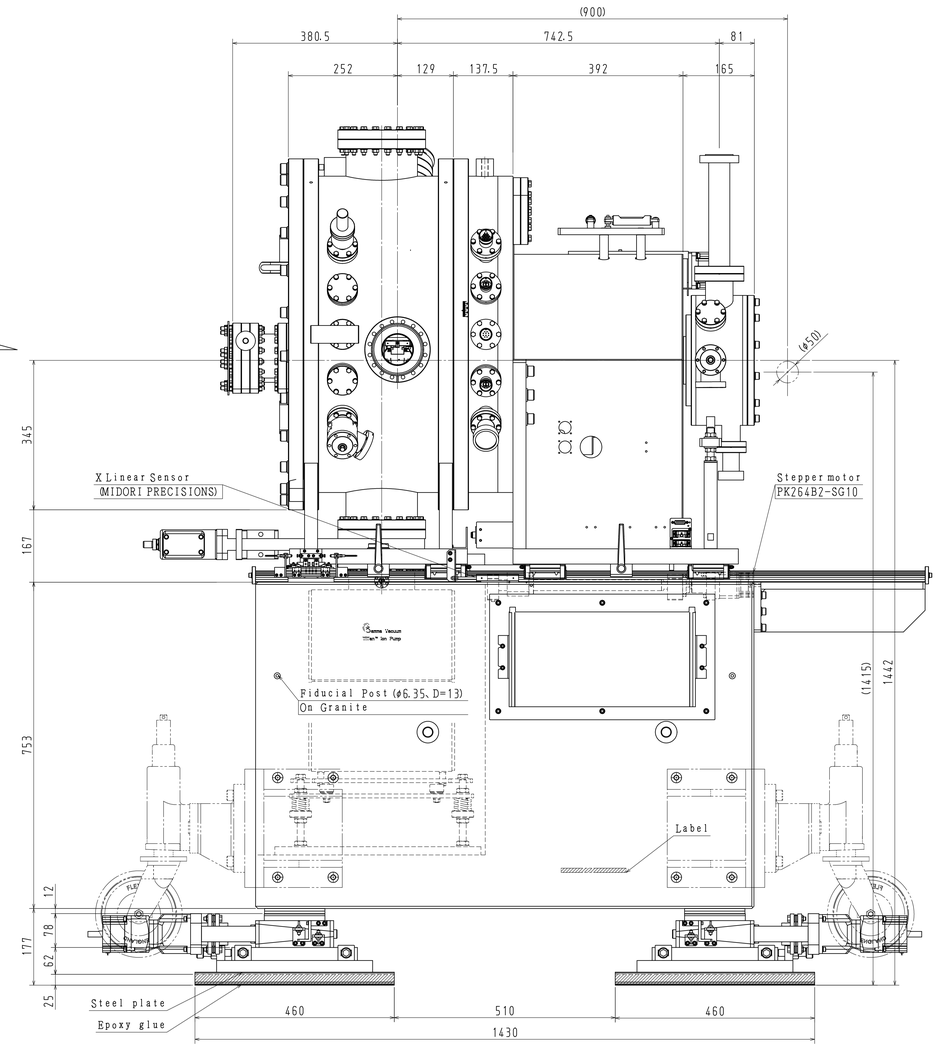

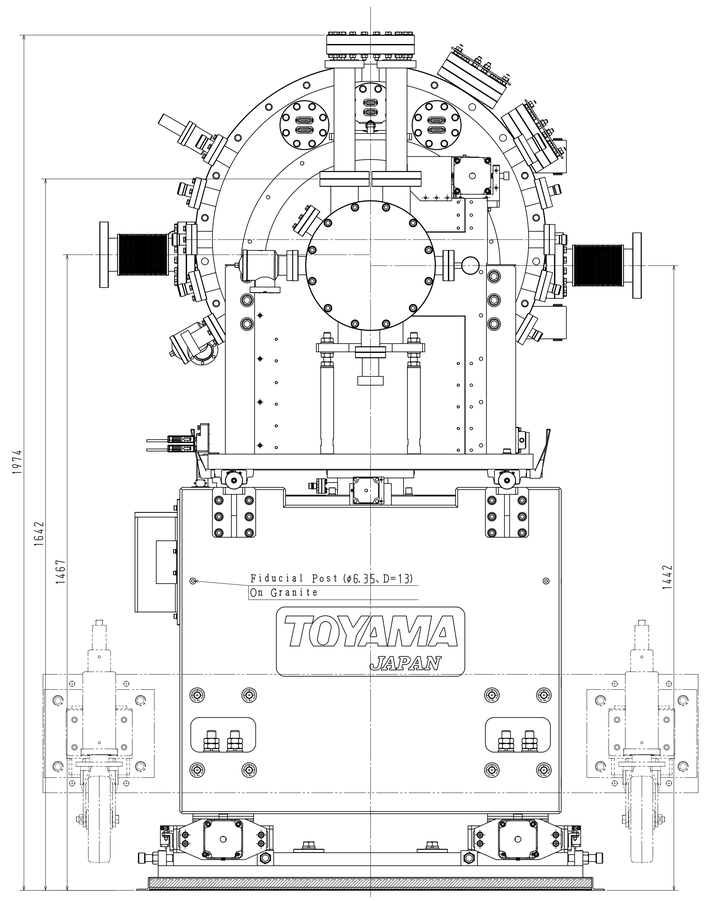

CHECKED BY	DESIGNED BY	DRAWN BY	UNIT:mm	TITLE NSLSI FXI Beamline DCM Assy
Hatanaka 24/Aug/2015	Akiyama 06/Jul/2015	T.Fukuda 25/Nov/2015		
TOYAMA co.,ltd			SCALE 1:5	DWG No. 0AB-01050 △1

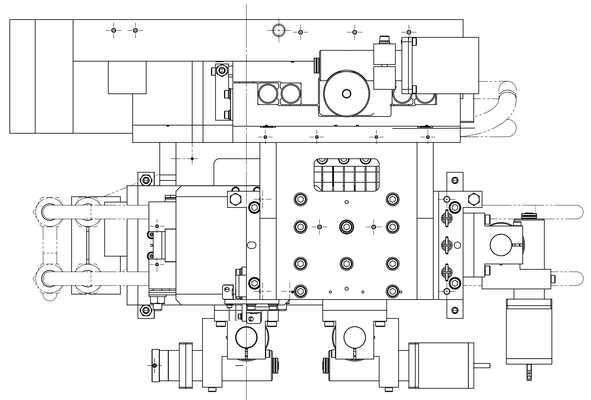

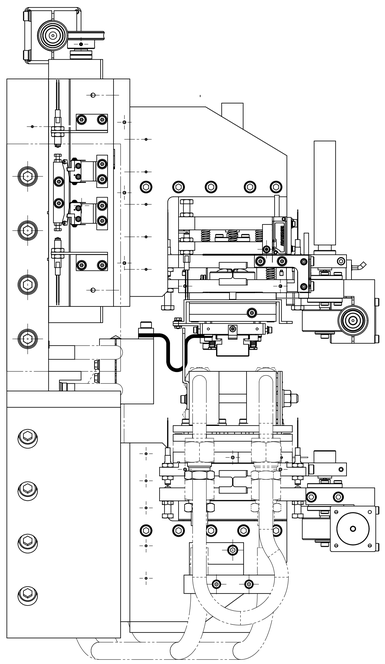

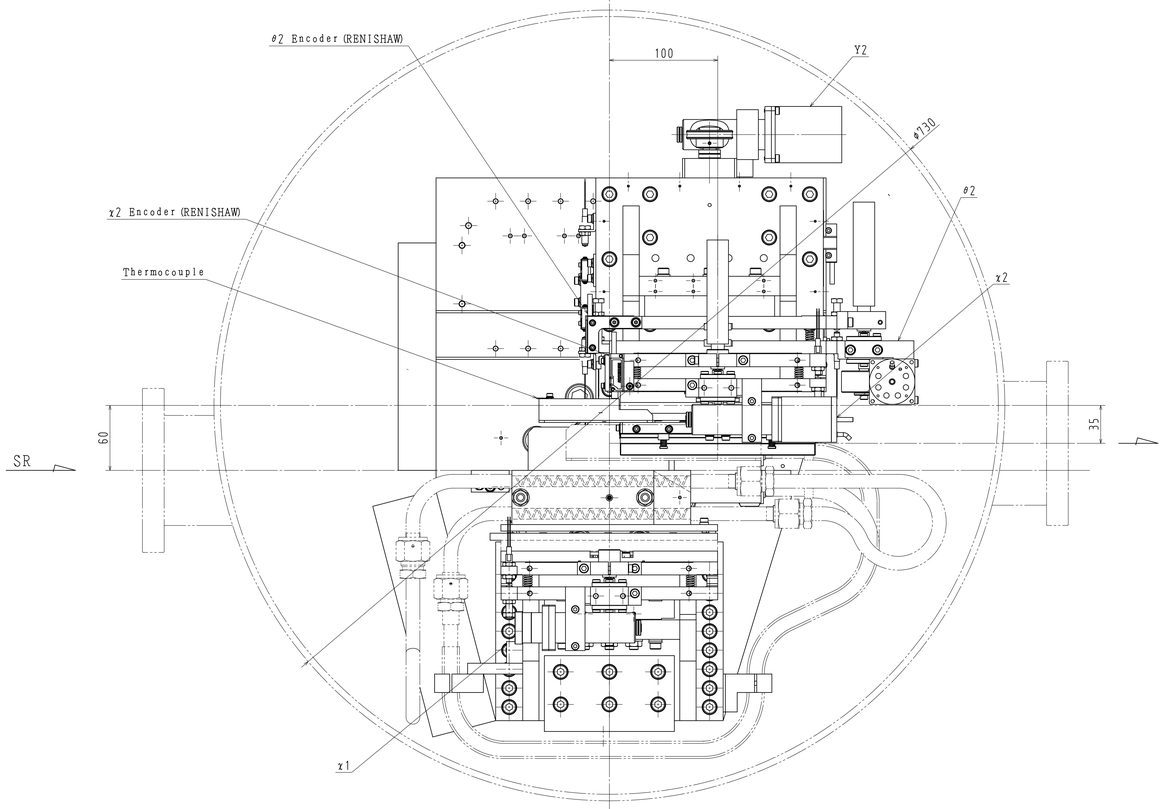

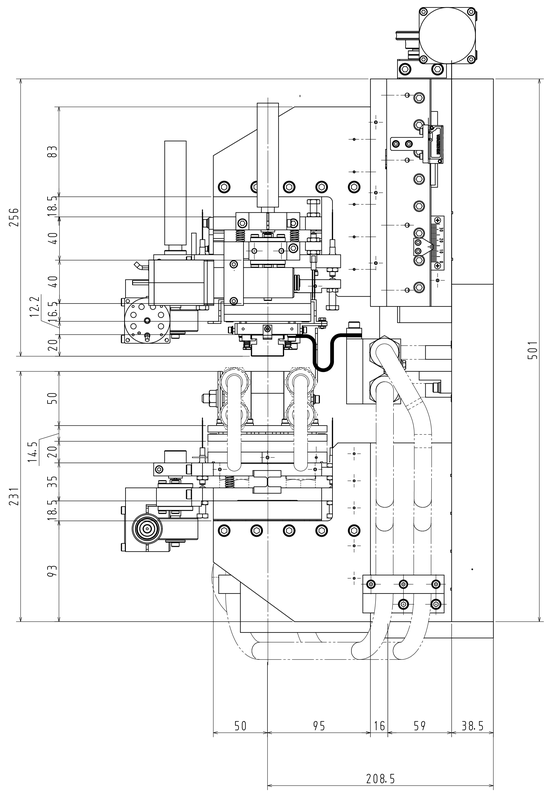

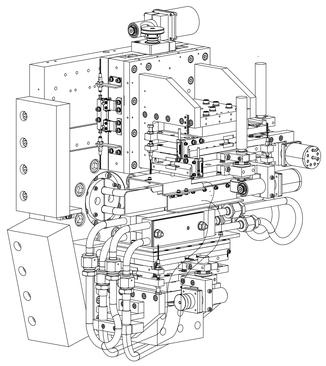

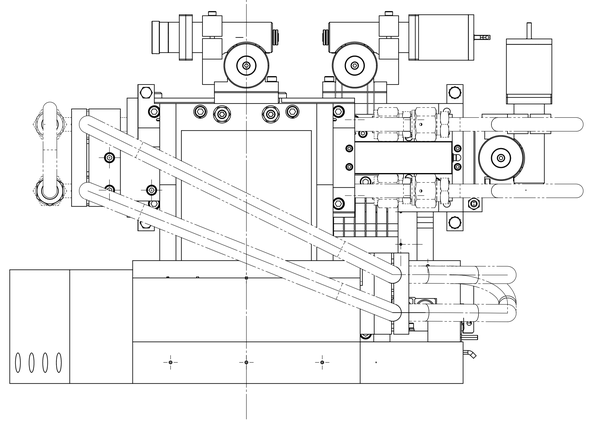

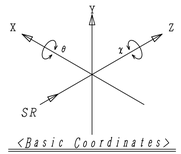

<Basic Coordinates>

<Specifications>

Axis	Range	Resolution	Stepper Motor	Encoder	Resolution (Encoder)
Bragg angle, θ	-5°~30°	1.25μrad/hst	PK296DB	T2001-30A	0.25μrad
Y2	±5mm	0.1μm	VSS52.200.1.2-UHV-KTC	T1601-50M	50nm
θ2 Coarse Motion	±17.45mrad	0.370μrad	VSS42.200.1.2-UHV-KTC	T2651-50M	0.0833μrad
θ2 Fine Motion	400μrad	8.89nrad	P-212.4SV (piezo)		
χ2 Coarse Motion	±17.45mrad	0.588μrad	VSS42.200.1.2-UHV-KTC	T2641-50M	0.0455μrad
χ2 Fine Motion	705μrad	14.12nrad	P-212.4SV (piezo)		
χ1	±10mrad (manual)	2.88μrad			

REV	MODIFICATION	DATE	MOD/BY

CHECKED BY	DESIGNED BY	DRAWN BY	UNIT: mm	TITLE
Hatanaka 03/Dec/2015	Akiyama 06/Jul/2015	T.Fukuda 03/Dec/2015		NSLSI FXI Beamline DCM Inside vacuum stage mech
TOYAMA co.,ltd			SCALE 1:2	DWG No. 0AF-00288

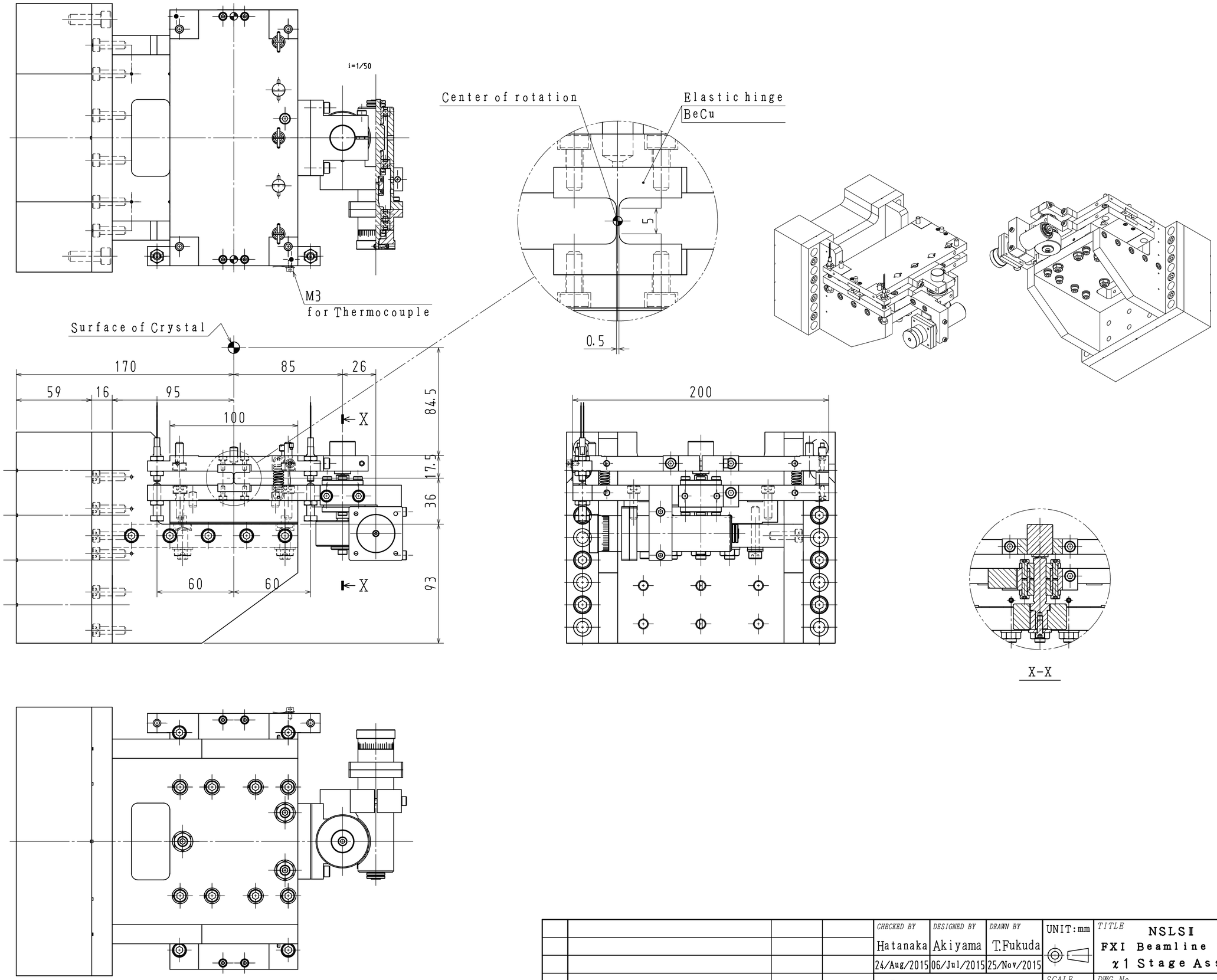

REV	MODIFICATION	DATE	MOD/BY

CHECKED BY	DESIGNED BY	DRAWN BY	UNIT:mm
Hatanaka	Akiyama	T.Fukuda	
24/Aug/2015	06/Jul/2015	25/Nov/2015	

TOYAMA co.,Ltm

TITLE: NSLSⅡ FXI Beamline DCM χ1 Stage Assy

SCALE: 1:2

DWG No. 2AE-00775 △0

ICAD

<Specifications>

Axis	Range	Resolution	Stepper Motor	Encoder	Resolution (Encoder)
θ2 Coarse Motion	±17.45mrad	0.370μrad	VSS42.200.1.2-UHV-KTC	T2651-50M	0.0833μrad
θ2 Fine Motion	400μrad	8.89nrad	P-212.4SV (piezo)		
χ2 Coarse Motion	±17.45mrad	0.588μrad	VSS42.200.1.2-UHV-KTC	T2641-50M	0.0455μrad
χ2 Fine Motion	705μrad	14.12nrad	P-212.4SV (piezo)		

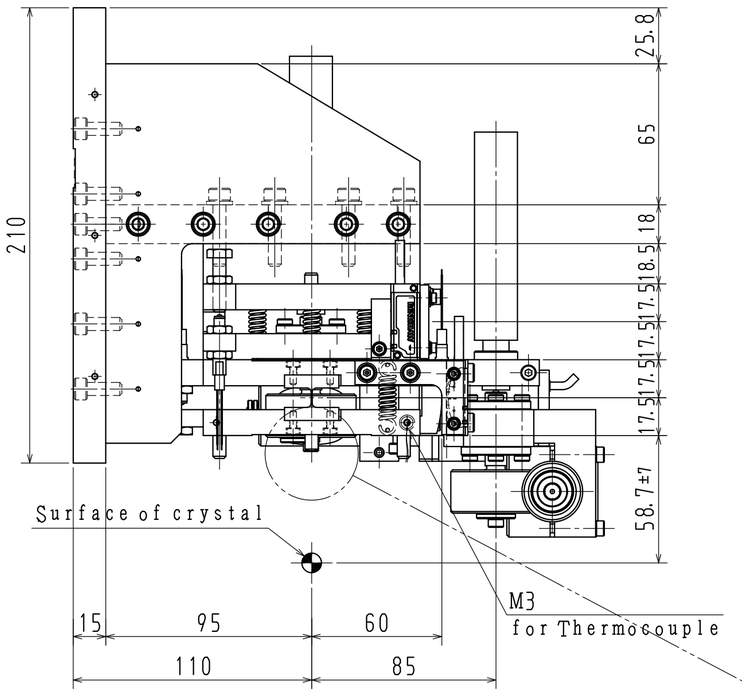

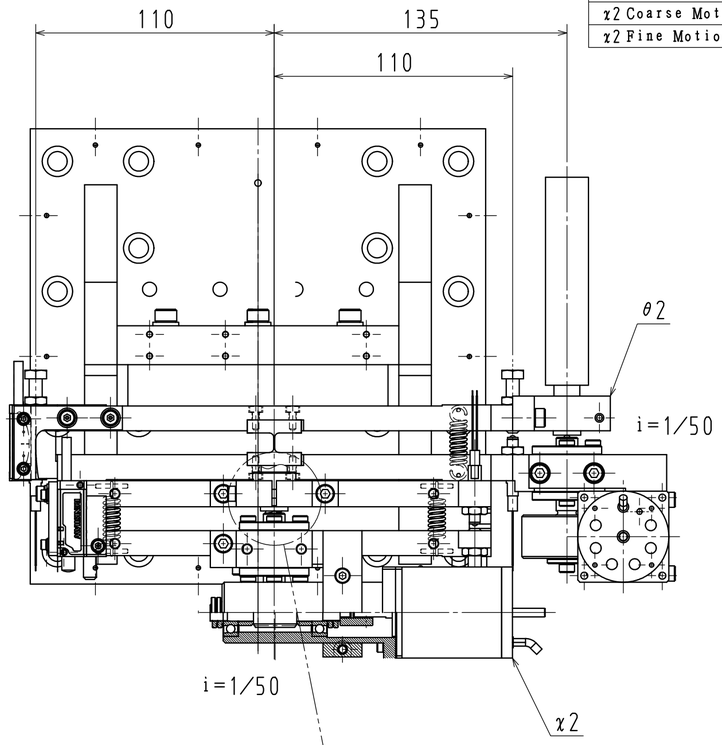

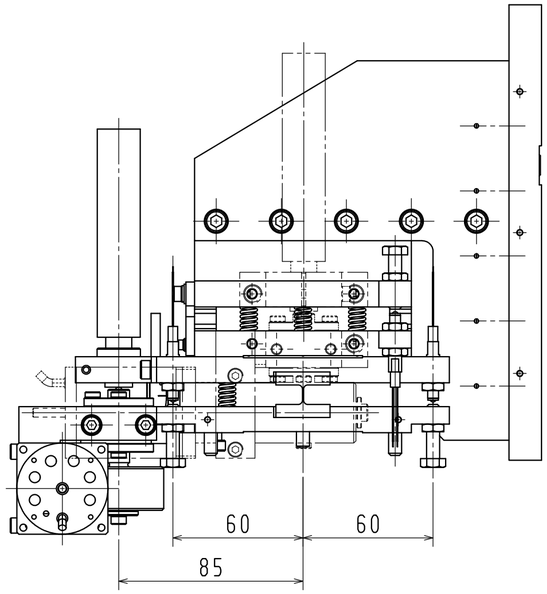

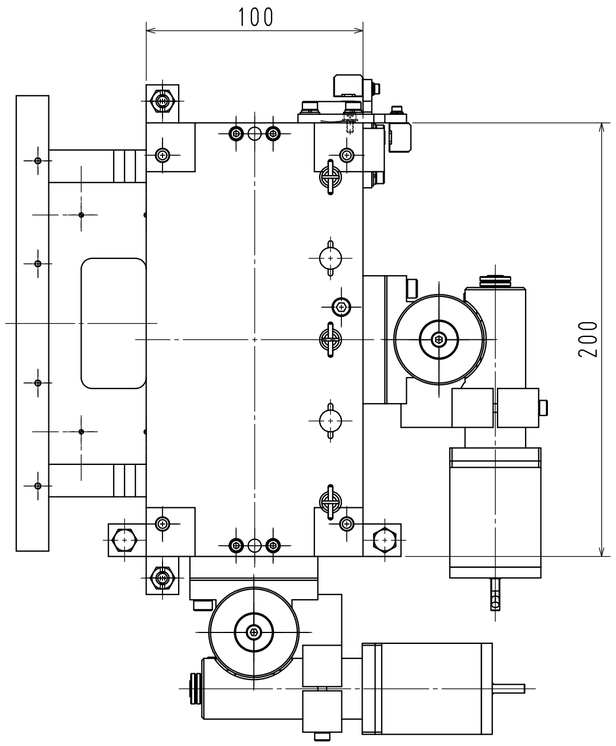

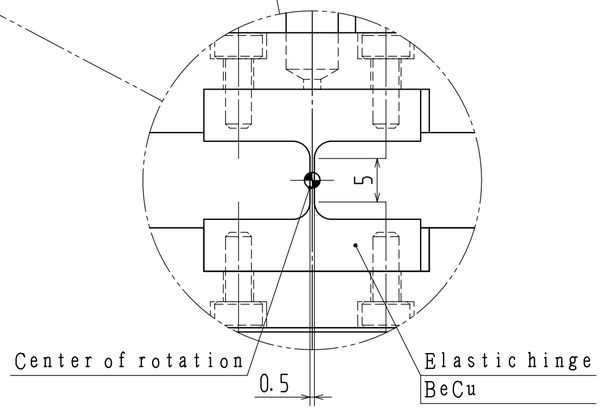

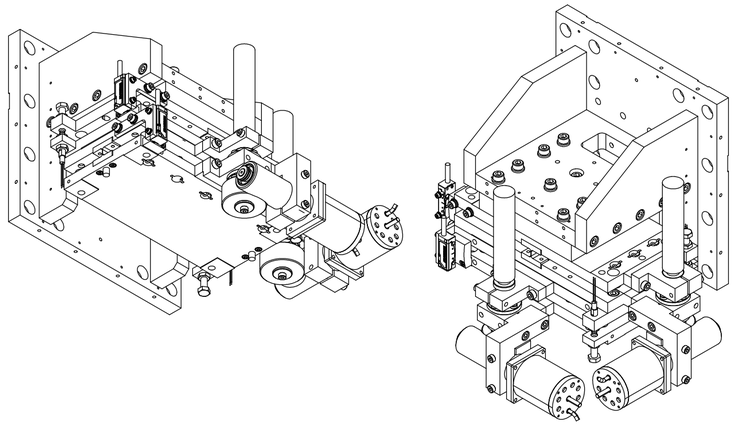

REV	MODIFICATION	DATE	MOD/BY

CHECKED BY	DESIGNED BY	DRAWN BY	UNIT: mm
Hatanaka	Akiyama	T.Fukuda	
05/Nov/2015	06/Jul/2015	26/Nov/2015	

TOYAMA co.,Ltd

TITLE: NSLSII FXI Beamline DCM χ2・θ2 Stage Assy

SCALE: 1:2

DWG No. 2AF-00090 △1

ICAD

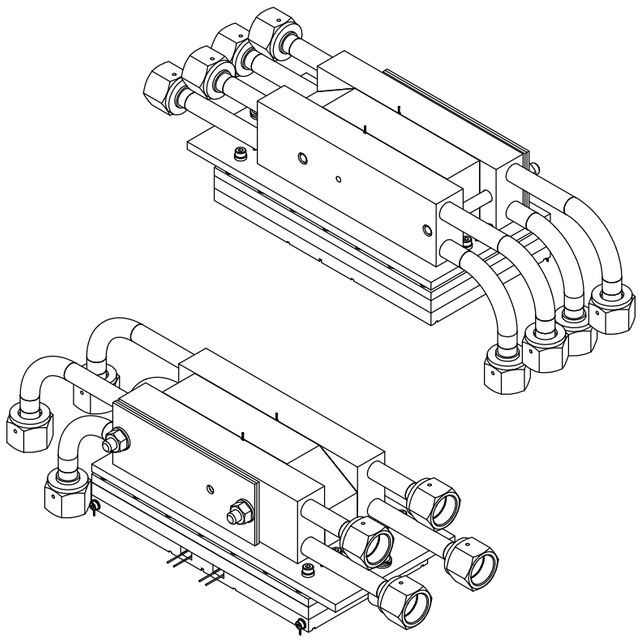

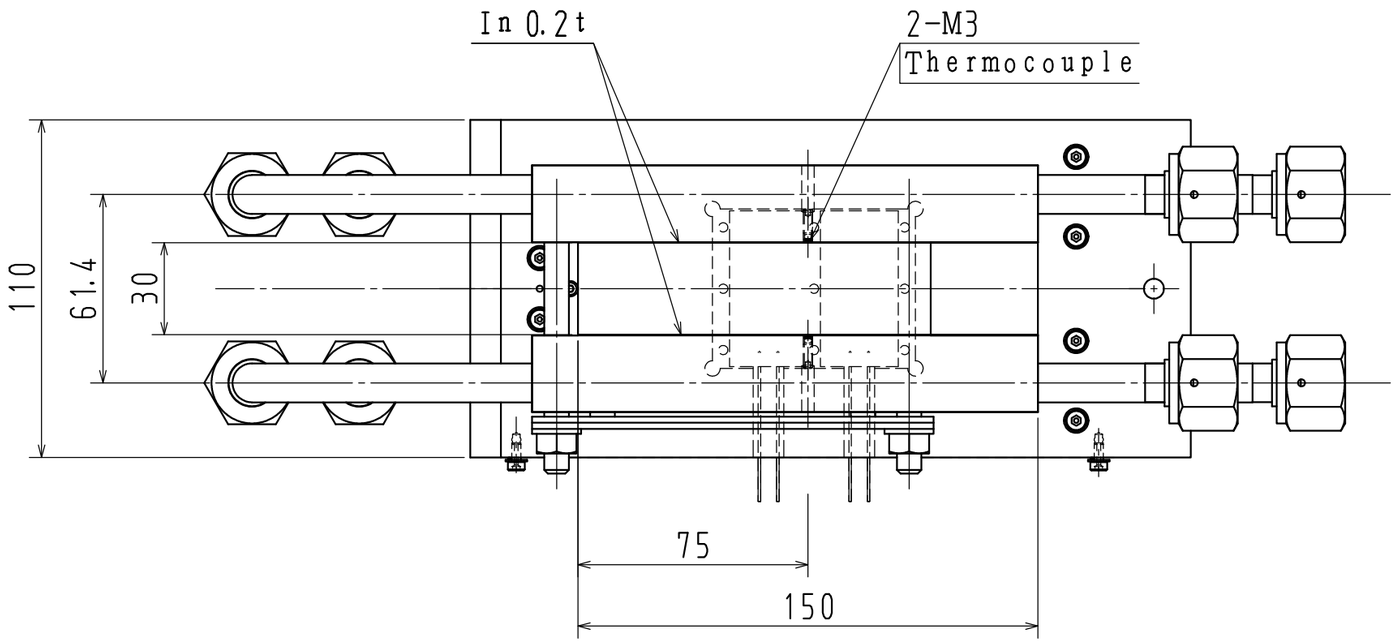

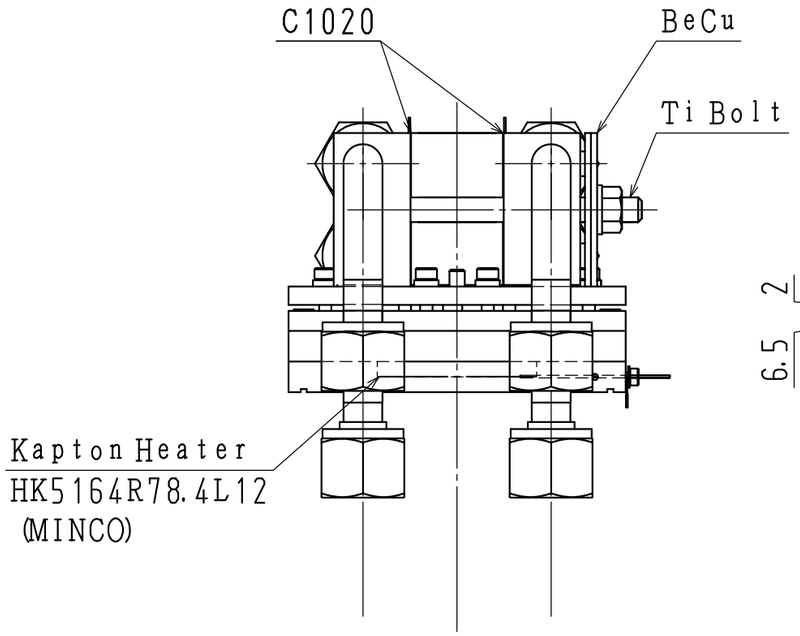

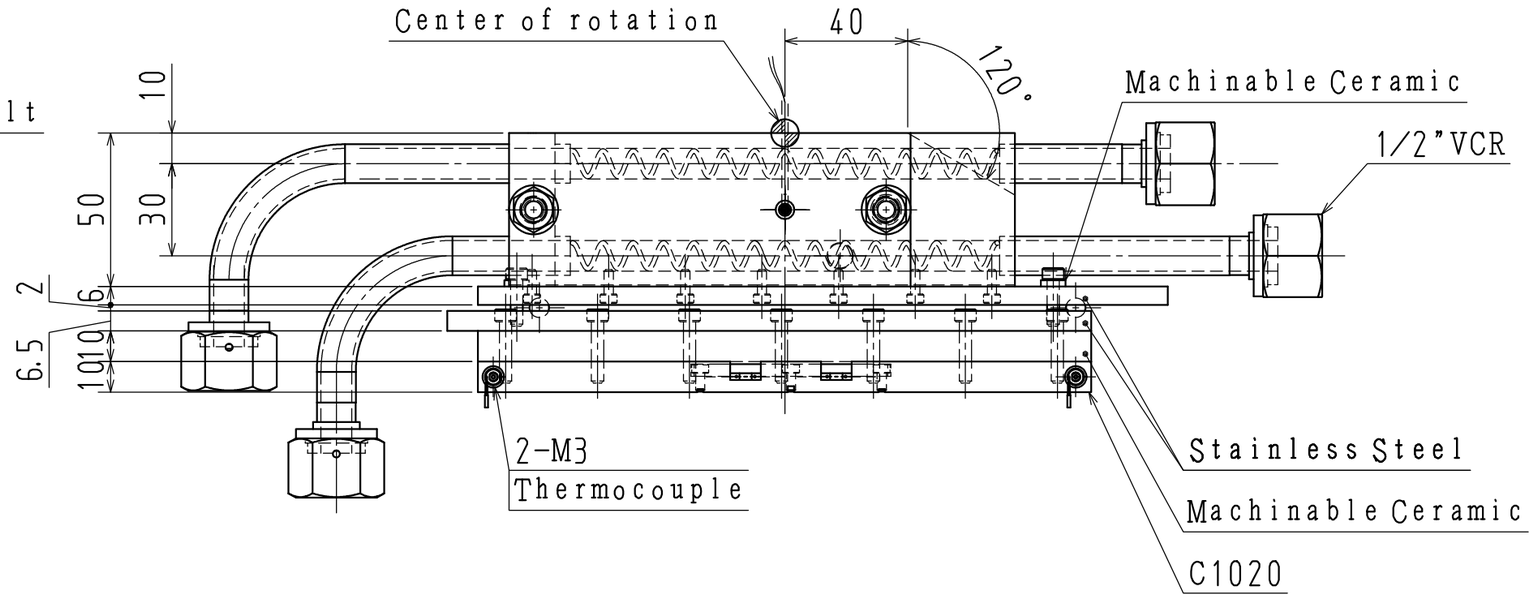

REV	MODIFICATION	DATE	MOD/BY

CHECKED BY	DESIGNED BY	DRAWN BY	UNIT:mm
Hatanaka	Akiyama	T.Fukuda	
05/Nov/2015	06/Jul/2015	26/Nov/2015	

TOYAMA CO.,LTD

TITLE: NSLSII FXI Beamline DCM Crystal Holder 1

SCALE: 1:2

DWG No. 3AG-00196 △0

ICAD

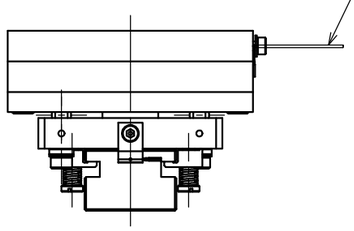

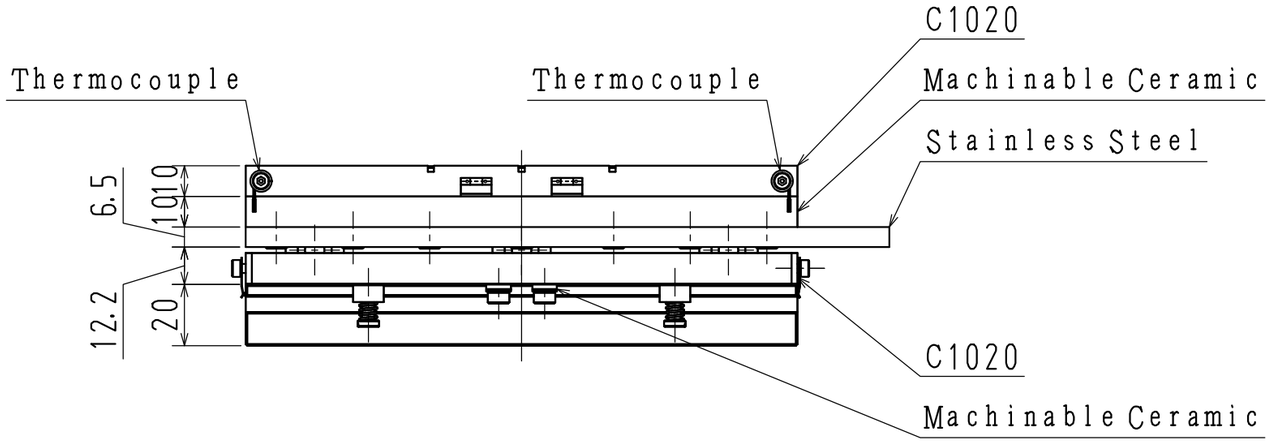

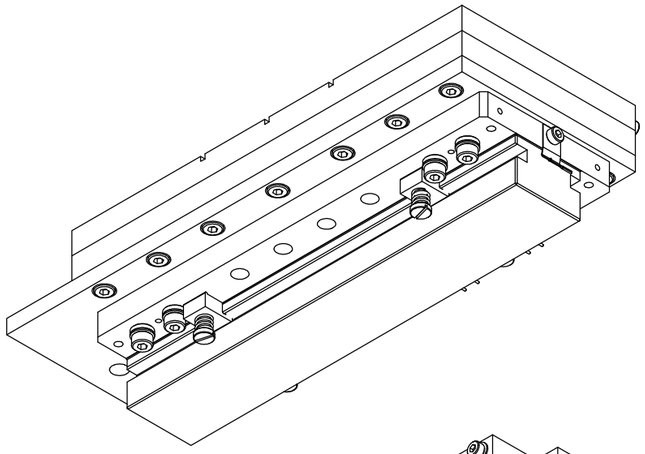

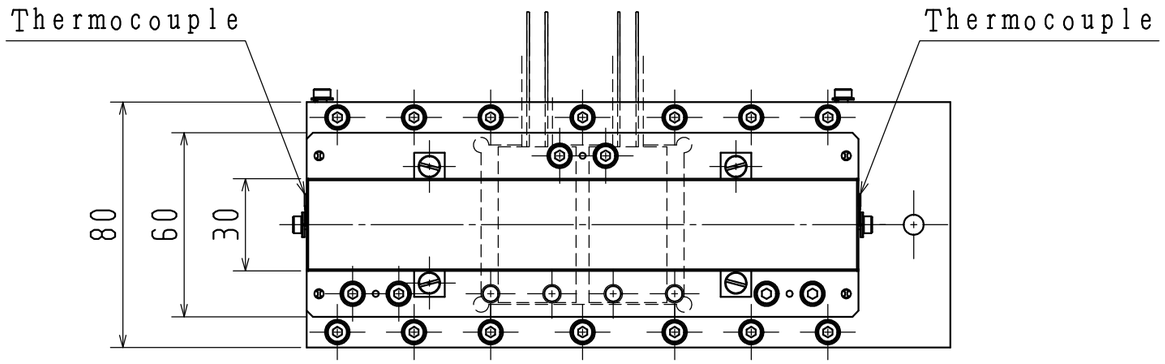

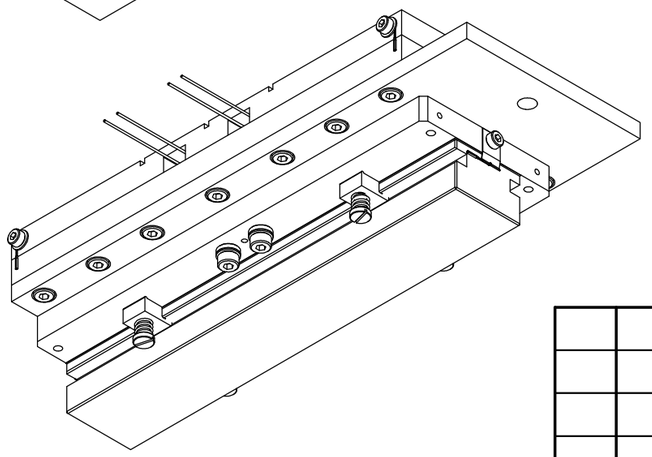

REV	MODIFICATION	DATE	MOD/BY

CHECKED BY	DESIGNED BY	DRAWN BY	UNIT:mm
Hatanaka	Akiyama	T.Fukuda	
05/Nov/2015	06/Jul/2015	26/Nov/2015	

TOYAMA co.,LTD

TITLE: NSLSII FXI Beamline DCM Crystal Holder2

SCALE: 1:2

DWG No. 3AG-00197 △0

ICAD

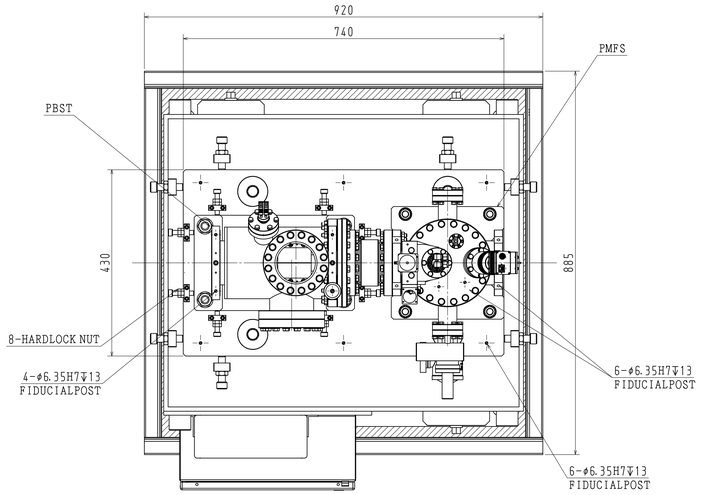

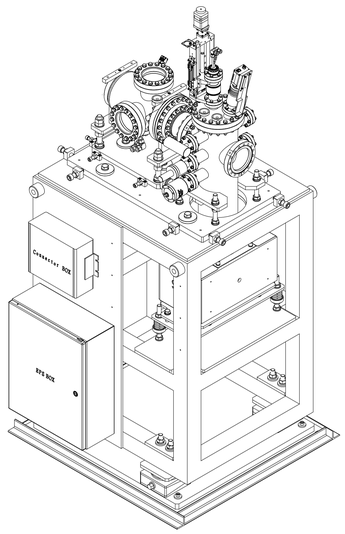

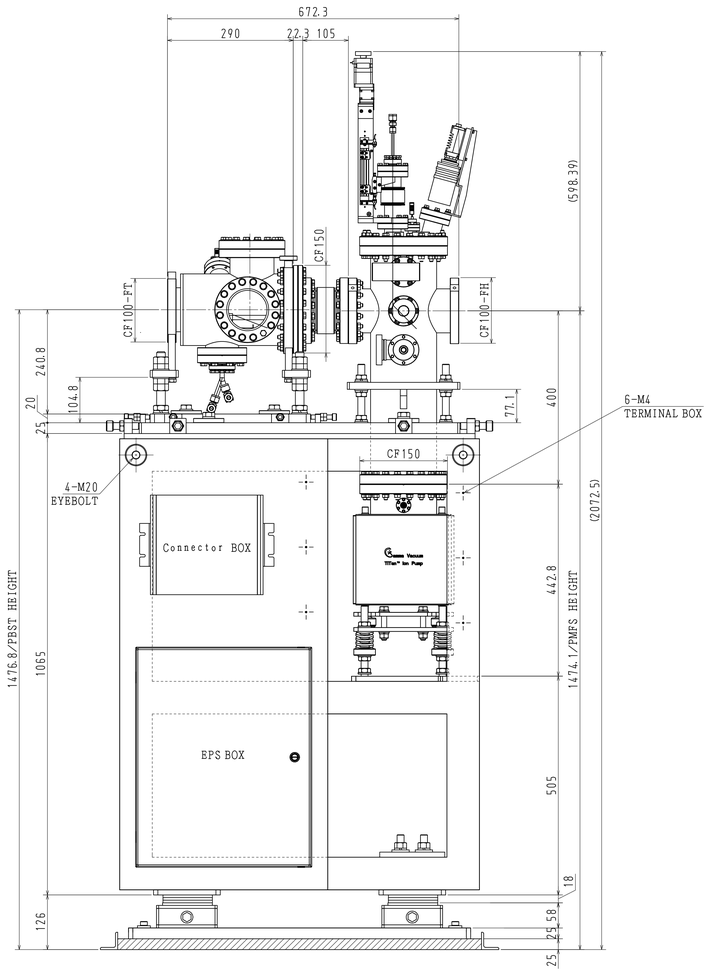

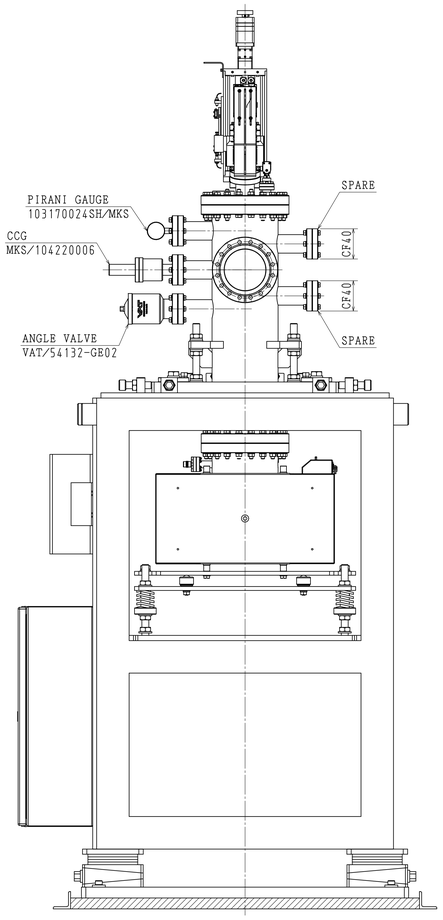

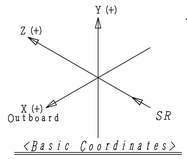

<Manual Adjustment Mechanism>

	Axis	Range	Resolution	note
PMFS	Y	±10mm	2mm/rev.	M16 metric coarse thread
PBST	X	±15mm	2mm/rev.	M16 metric coarse thread
	Y	± 5mm	2mm/rev.	M10 metric coarse thread
	Z	±15mm	2mm/rev.	M16 metric coarse thread
Whole Components (adjustment plate)	X	±15mm	2mm/rev.	M16 metric coarse thread
	Z	±15mm	2mm/rev.	M16 metric coarse thread
Support Structure (leveling block)	Y	±24mm	0.3mm/rev. 6mm/pcs.	Leveling block ±6mm Shim plate 6mmx3pcs.

REV	MODIFICATION	DATE	MOD/BY
3	Rearrangement of each components, Hardlock nut		
	CNTL BOXs and load plates are installed.	19/Nov/2015	S.Watanabe
2	Rearrangement of each Components, Hardlock Nuts are used for PBST.	05/Nov/2015	S.Watanabe
1	Support Structures of PMFS and PBS Assy are combined	28/Oct/2015	S.Watanabe

CHECKED BY: Akiyama 19/Nov/2015
DESIGNED BY: Watanabe 19/Nov/2015
DRAWN BY: Watanabe 19/Nov/2015
UNIT: mm
TITLE: FXI PMFS and PBS Assy.
TOYAMA co.,ltd
SCALE: 1:5
DWG No. 0AB-01055 3

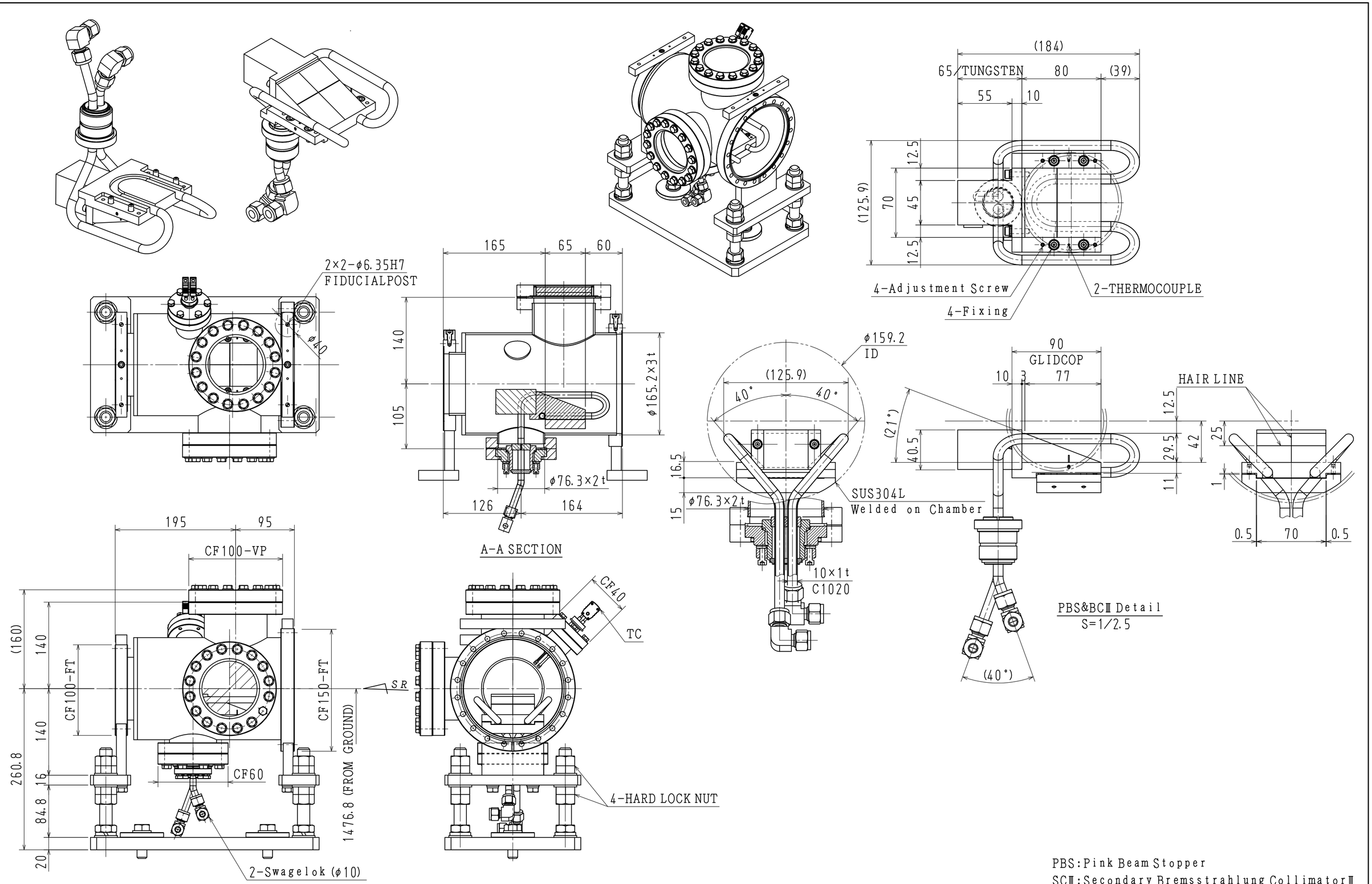

PBS:Pink Beam Stopper
SCⅢ:Secondary Bremsstrahlung CollimatorⅢ

REV	MODIFICATION	DATE	MOD/BY	REV	MODIFICATION	DATE	MOD/BY
				3	Dimension of BCⅢ and Glidcop	17/Nov/2015	S.Watanabe
				2	Dimension of BCⅢ and Glidcop, Suppoort structure		
					Hard lock nut is used	05/Nov/2015	S.Watanabe
4	Dimension of BCⅢ and Glidcop	24/Nov/2015	S.Watanabe	1	Water Pass, Dimension of BCⅢ and Glidcop	28/Oct/2015	S.Watanabe

CHECKED BY	DESIGNED BY	DRAWN BY	UNIT:mm	TITLE
Akiyama	Watanabe	Watanabe		NSLSⅡ/FXI Beamline PBS&SCⅢ Assy
24/Nov/2015	24/Nov/2015	24/Nov/2015		

TOYAMA co.,Ltd

SCALE 1:4

DWG No. 2AJ-00764 4

ICAD

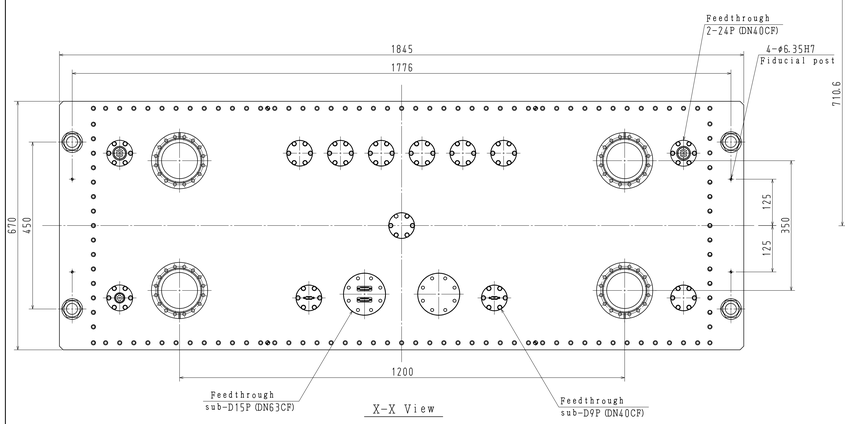

X-X View

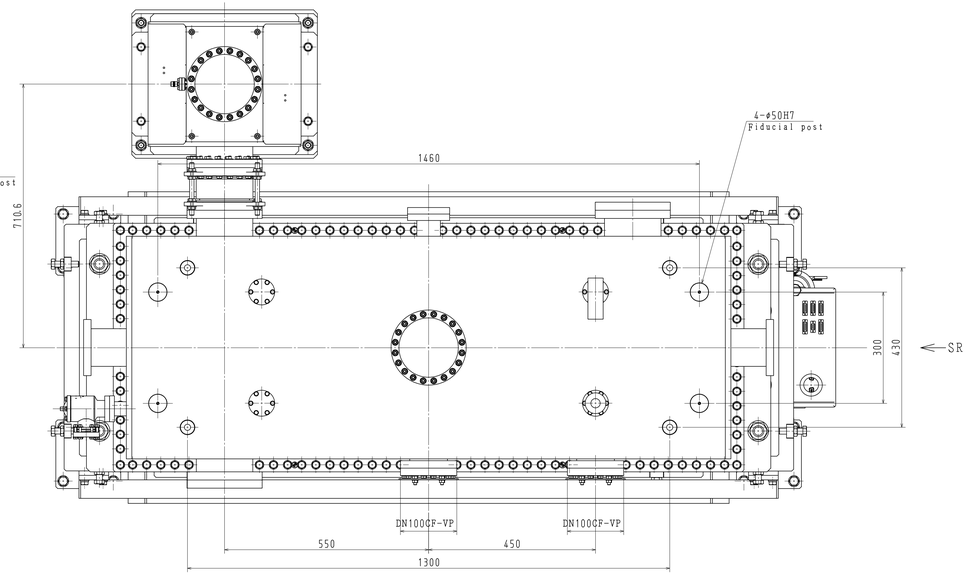

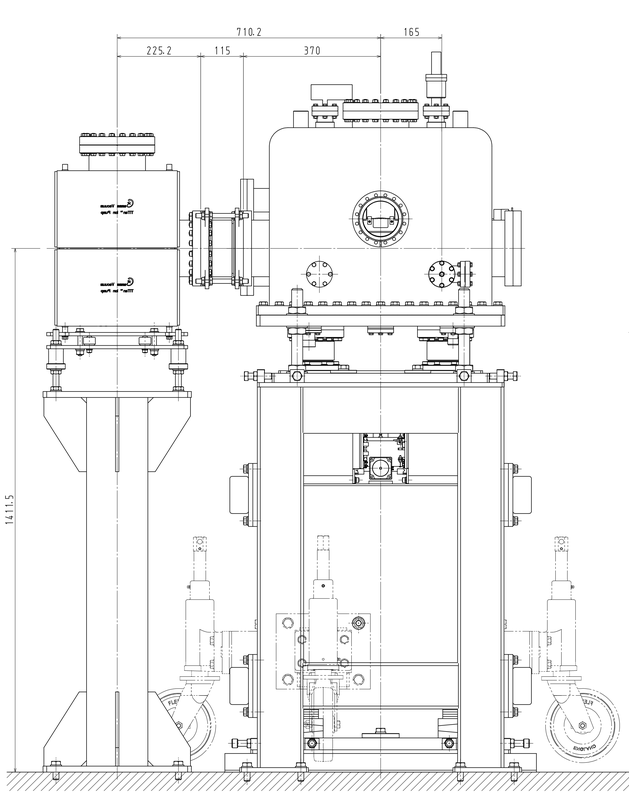

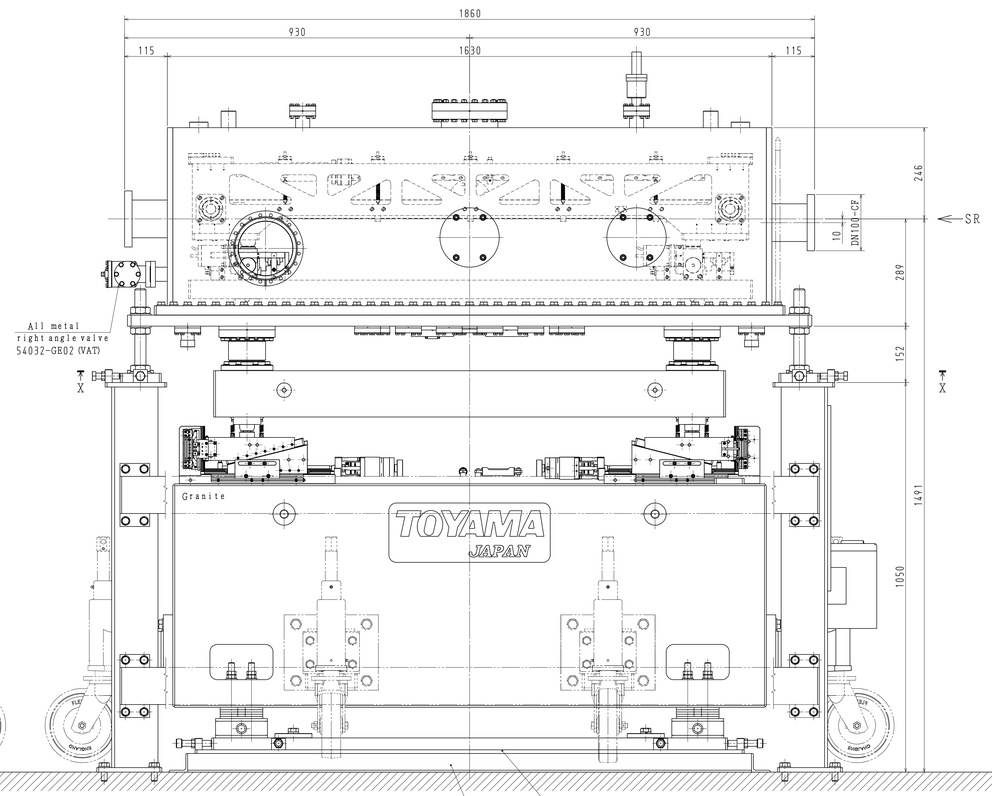

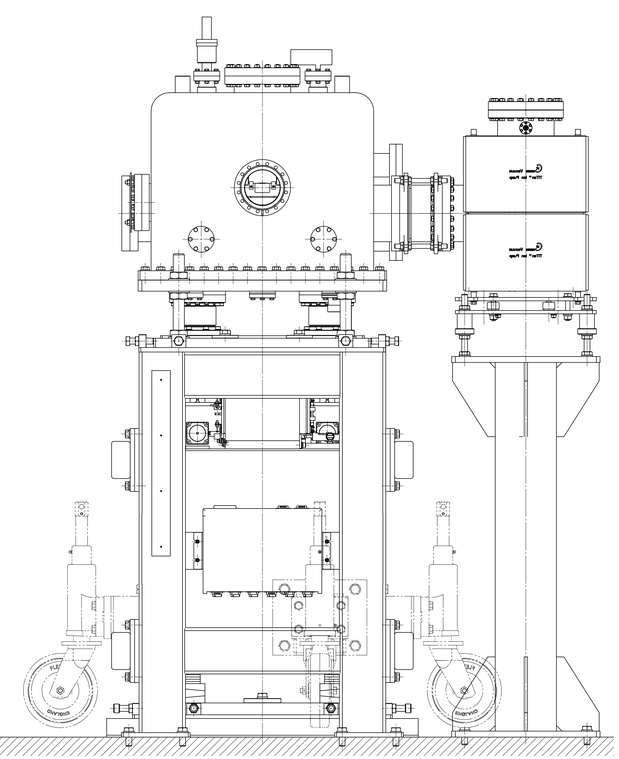

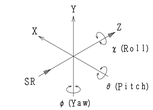

<Basic Cordinates>

<Mirror manual alignments>

Axis	Range	Resolution
X	±15mm	7mm/rev
Y	±6mm	0.3mm/rev
Y'	±2mm	Shims
Z	±15mm	7mm/rev

<Chamber manual alignments>

Axis	Range	Resolution	Adjustment tool
X	±15mm	7mm/rev	Screw (M16×2mm)
Y	±20mm	3.5mm/rev	Screw (M30×3.5mm)
Z	±15mm	7mm/rev	Screw (M16×2mm)

<Mirror motion specifications>

Axis	Range	Resolution	Repeatability	resolution (Encoder)	Actuator
X	±5mm	0.1μm	20μm	10nm	Motor
Y	-2mm~10mm	0.025μm	20μm	10nm	Motor
θ (pitch)	0.1~10mrad	0.0215μrad	1μrad	8.594nrad	Motor (Y1&Y2, Y3)
χ (roll)	±20mrad	0.074μrad	100μrad	29.5nrad	Motor (Y2&Y3)
φ (yaw)	±20mrad	0.086μrad	60μrad	8.594nrad	Motor

REV	MODIFICATION	DATE	MOD/BY

CHECKED BY	ASSIGNED BY	DRAWN BY	UNIT: mm
Hatanaka	Akiyama	Mori	
28/Aug/2015	19/Aug/2015	19/Aug/2015	

TOYAMA co.,ltd.

SCALE 1:5

TITLE
NSLSL/FXI Beamline
Toroidal Mirror Assy

DWG No. 0AB-01048 △6

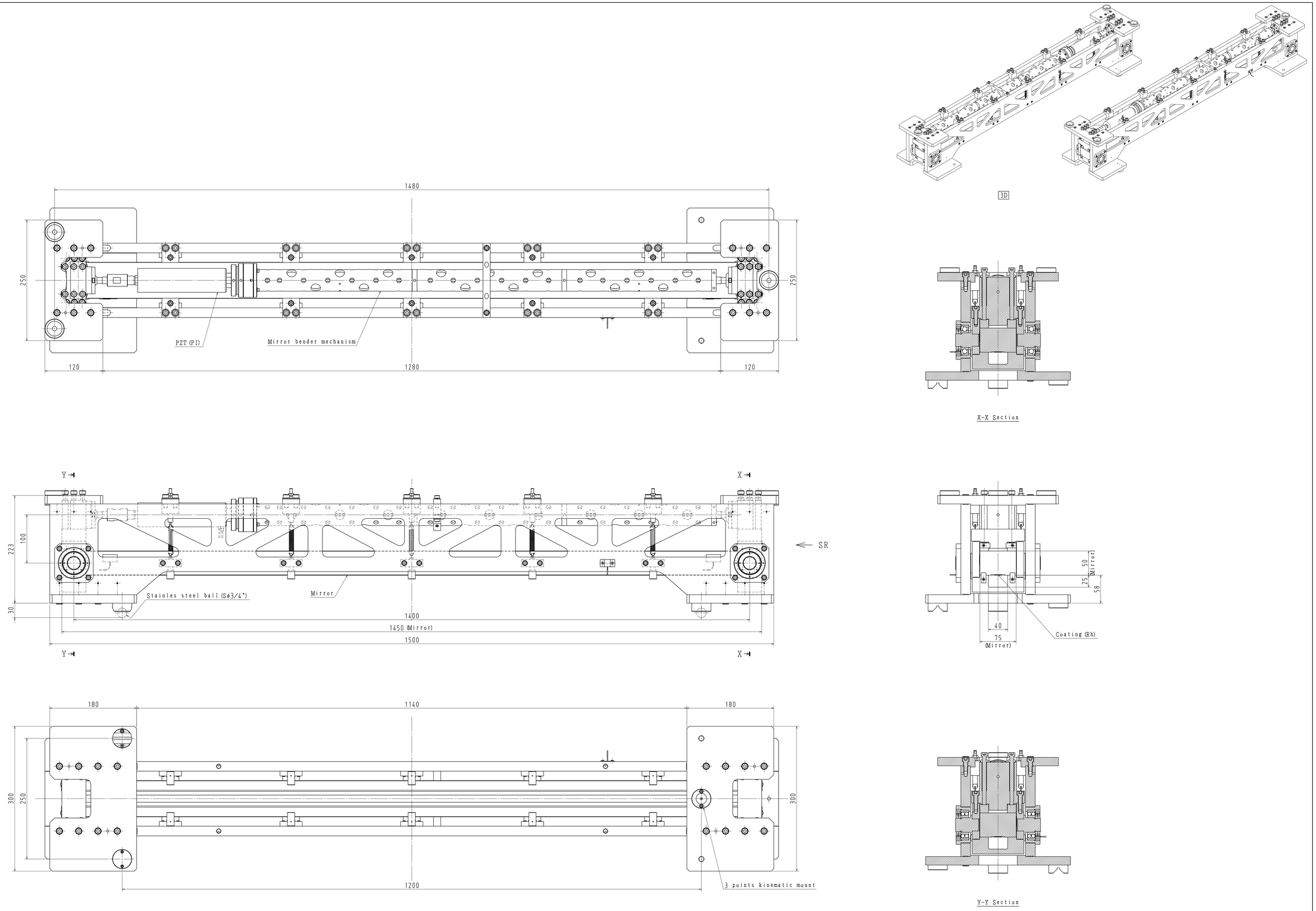

REV	MODIFICATION	DATE	MOD/BY

CHECKED BY	DESIGNED BY	DRAWN BY	UNIT:mm	TITLE
Hatanaka	Akiyama	Mori		NSLSI/FXI Beamline Toroidal Mirror Holder
20/Aug/2015	19/Aug/2015	19/Aug/2015		

TOYAMA co.,Ltd

SCALE 1:2.5

DWG No. 0AG-00246 1

ACAD

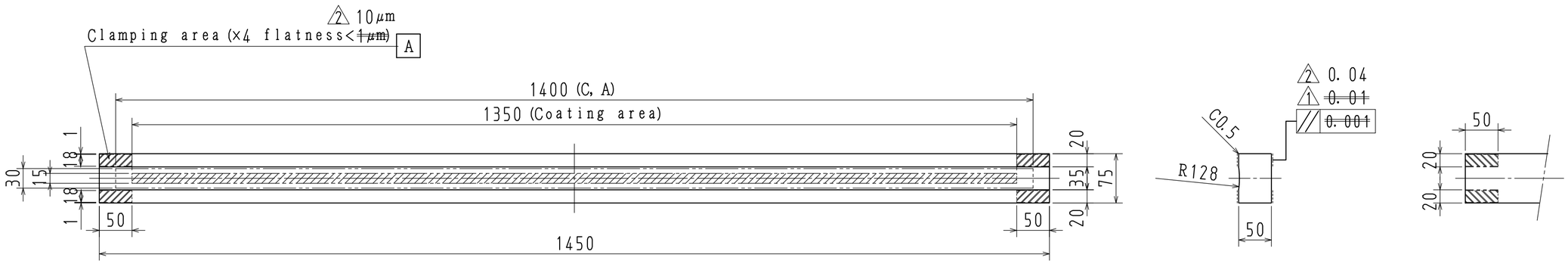

Cylindrical mirror optical specifications

Mirror material	Single crystal silicon
Material resistivity	≤10 ohm-cm
Reflecting surfaces	Rhodium. The rhodium part of the mirror surface shall be coated with a 60nm ±10nm thick Rhodium layer. A 12.5nm ±2.5nm thick chromium binder layer shall be used between the silicon and the rhodium coating.
Minimum active area	1350mm (L) ×15mm (W)
Mirror dimensions	1450 (L) ×75mm (W) ×50mm (T)
Figure (unbent, reflecting surface)	Cylinder. Sagittal radius 128mm±1%
Surface roughness (reflecting surface)	≤0.3nm rms
Tangential slope error (unbent, reflecting surface, no beam)	≤1μrad rms (freq range L-1 to 0.5mm-1)
Sagital figure error (unbent, reflecting surface, no beam)	≤20μrad rms (freq range W-1 to 0.5mm-1)
Surface finish (reflecting surface)	No visible defects or scratches. strain free chamical-mechnical polish.
General finish	All mirror edges shall be chamfered or rounded.
Reference	This mirror will bend a radius in the tangential direction from flet to 5Km.

REV	MODIFICATION	DATE	MOD/BY
2	Change datum 0.01 to 0.04 Change Flatness 1μm to 10μm	08/Oct/2015	K. A
1	Change datum 0.001 to 0.01	30/Sep/2015	K. A

CHECKED BY	DESIGNED BY	DRAWN BY	UNIT: mm	TITLE NSLS-II
Hatanaka 08/Oct/2015	Akiyama 08/Sep/2015	Akiyama 08/Oct/2015		FXI Photon Delivery System Cylindrical mirror
TOYAMA CO.,LTD			SCALE 1:5	DWG No. 2JG-00847 2

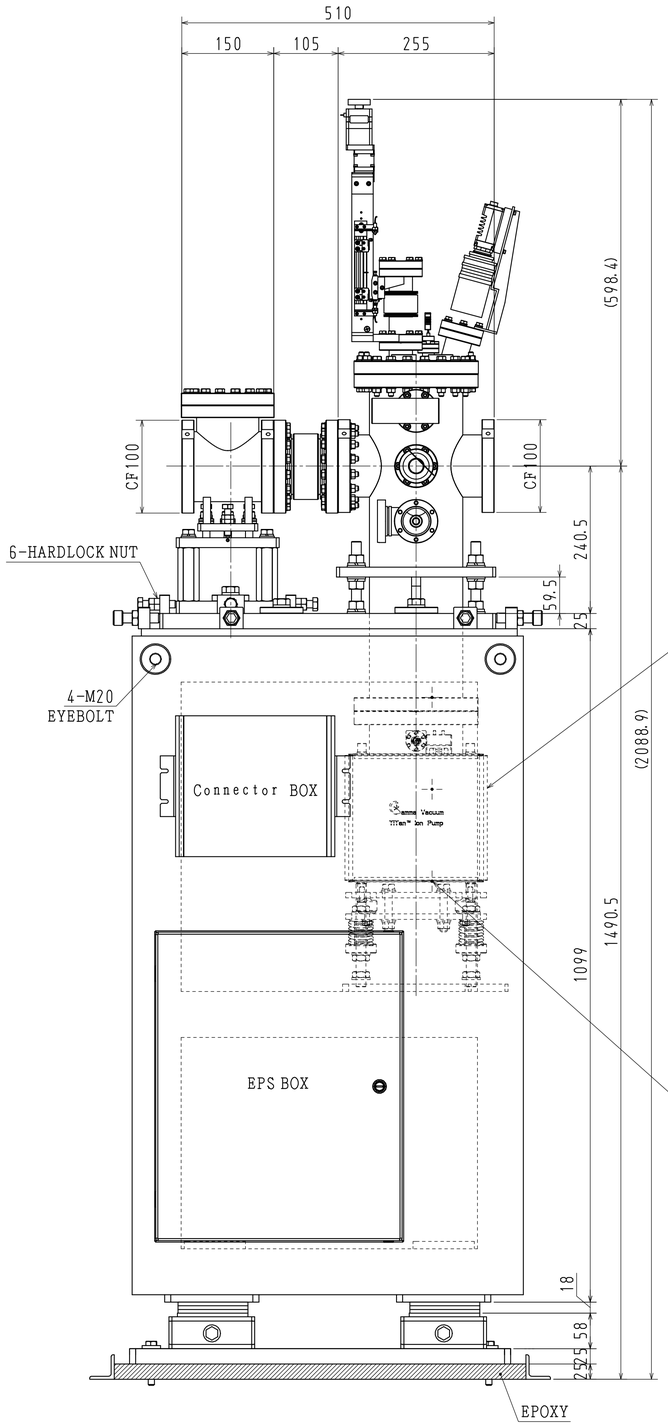

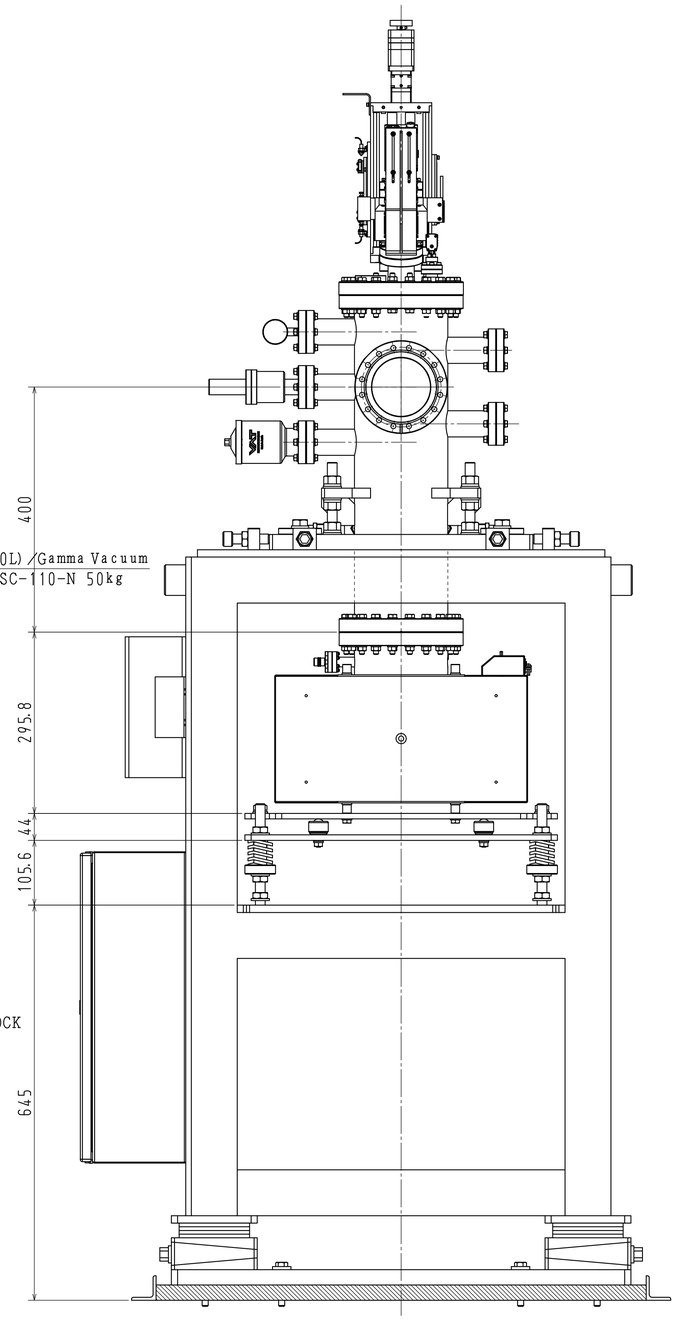

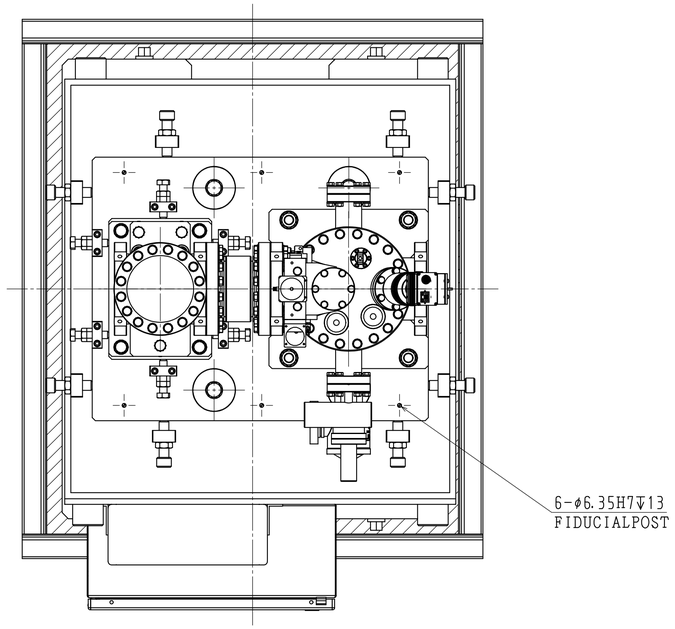

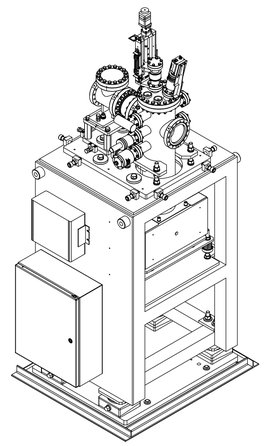

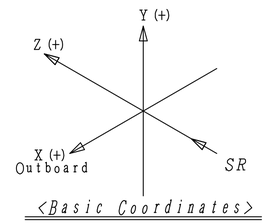

<Manual Adjustment Mechanism>

	Axis	Range	Resolution	note
MFS	Y	±15mm	2mm/rev.	M16 metric coarse thread
SBCW	X	±10mm	2mm/rev.	M10 metric coarse thread
	Y	± 5mm	1.5mm/rev.	M10 metric coarse thread
	Z	±10mm	2mm/rev.	M10 metric coarse thread
Whole Components (adjustment plate)	X	±15mm	2mm/rev.	M16 metric coarse thread
	Z	±15mm	2mm/rev.	M16 metric coarse thread
Support Structure (leveling block)	Y	±24mm	0.3mm/rev. 6mm/pcs.	Leveling block ±6mm Shim plate 6mm×3pcs.

REV	MODIFICATION	DATE	MOD/BY
3	Rearrangement of each components, Hardlock nut		
	CNTR BOXs and lead plates are installed.	19/Nov/2015	S.Watanabe
2	Rearrangement of two components, Support Structure	06/Nov/2015	S.Watanabe
1	Rearrangement of two components	28/Oct/2015	S.Watanabe

CHECKED BY	DESIGNED BY	DRAWN BY
Akiyama	Watanabe	Watanabe
06/Nov/2015	06/Nov/2015	06/Nov/2015

TOYAMA co.,ltd

UNIT: mm

TITLE: FXI MFS&SBCW Assy.

SCALE: 1:5

DWG No. 1AB-01509 △3

ICD

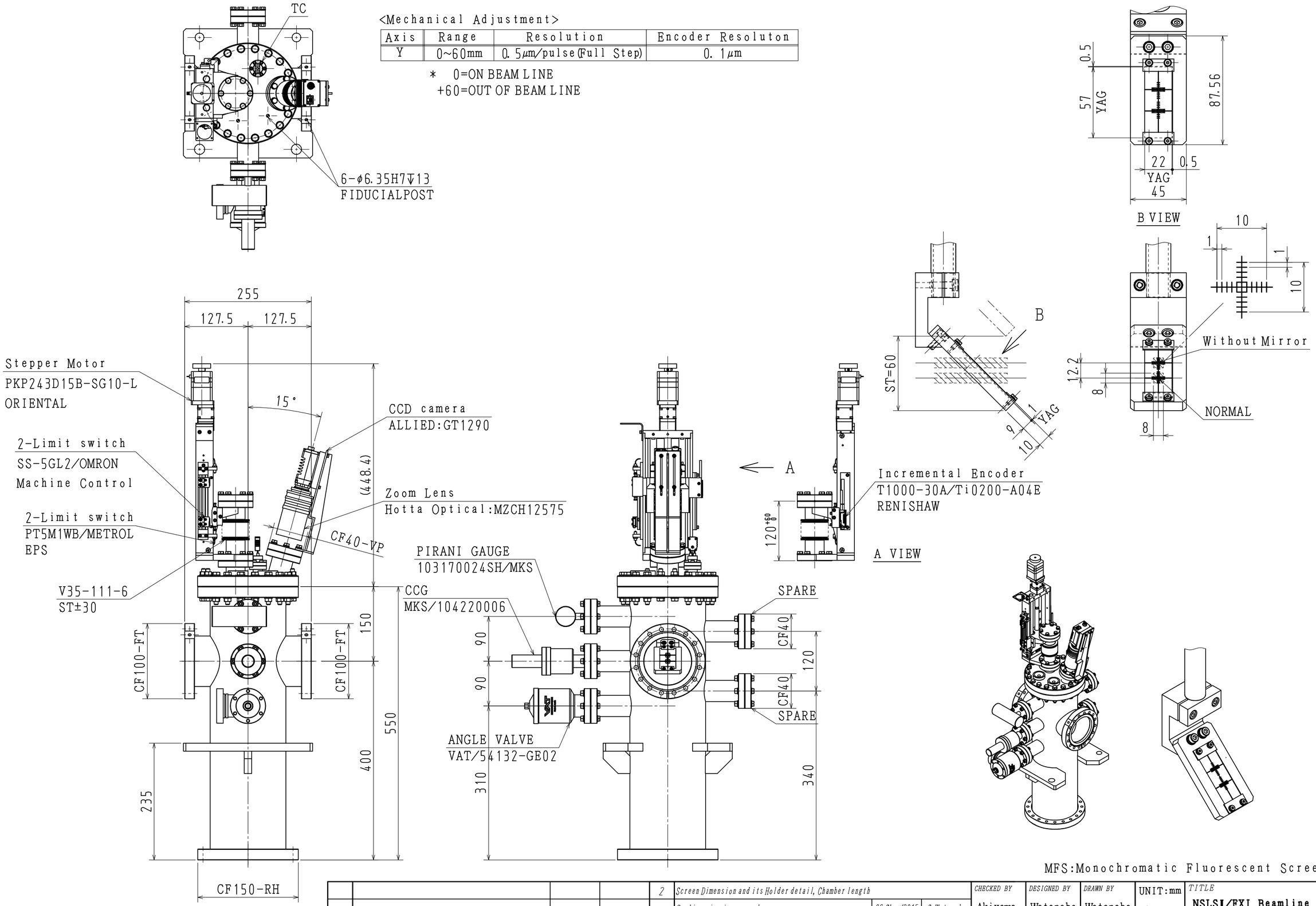

<Mechanical Adjustment>

Axis	Range	Resolution	Encoder Resoluton
Y	0~60mm	0.5μm/pulse(Full Step)	0.1μm

* 0=ON BEAM LINE
+60=OUT OF BEAM LINE

MFS:Monochromatic Fluorescent Screen

REV	MODIFICATION	DATE	MOD/BY	REV	MODIFICATION	DATE	MOD/BY
				2	Screen Dimension and its Holder detail, Chamber length		
					Cooling pipe is removed	06/Nov/2015	S.Watanabe
				1	Screen Dimension and its Holder detail		
3	TC is removed.	19/Nov/2015	S.Watanabe		Motor Spec., Bellows inner diamator	28/Oct/2015	S.Watanabe

CHECKED BY	DESIGNED BY	DRAWN BY	UNIT:mm
Akiyama	Watanabe	Watanabe	
19/Nov/2015	19/Nov/2015	19/Nov/2015	

TOYAMA co.,Ltm

TITLE: NSLSI/FXI Beamline MFS Chamber

SCALE: 1:5

DWG No.: 2AB-00450 3

ICAD

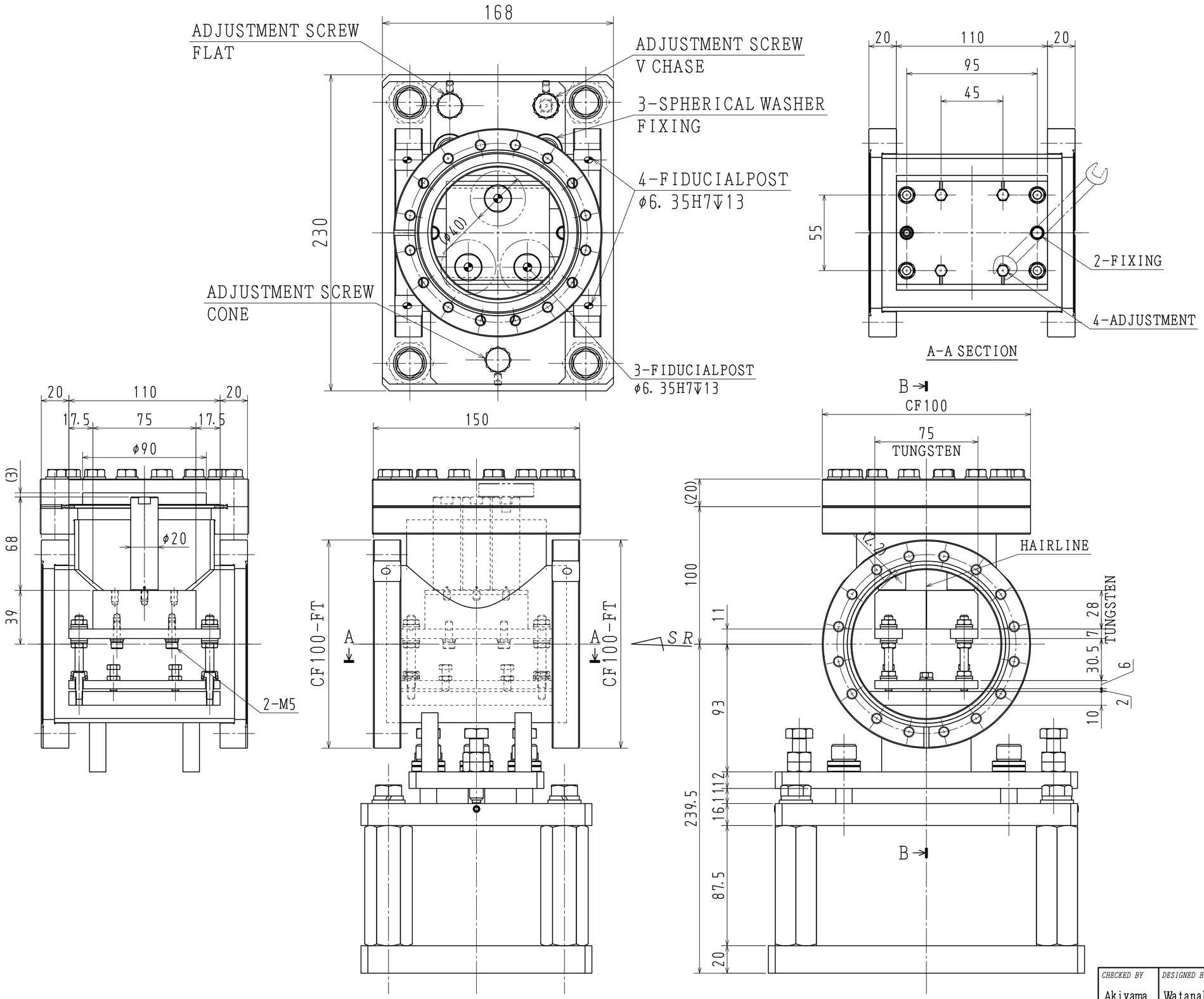

WEIGHT:
Tungsten:2. 8kg
Chamber interior:3. 5kg
Total:27kg

CHECKED BY	DESIGNED BY	DRAWN BY	UNIT:mm	TITLE
Akiyama	Watanabe	Watanabe		NSLSI/FXI Beamline Secondary Bremsstrahlung Shielding Ⅳ Assy.
24/Nov/2015	24/Nov/2015	24/Nov/2015		

TOYAMA co.,ltd | SCALE 1:2.5 | DWG No. 2AJ-00767 ⚠4 | ICAD

REV	MODIFICATION	DATE	MOD/BY	REV	MODIFICATION	DATE	MOD/BY	REV	MODIFICATION	DATE	MOD/BY
				3	Chamber interior support, Dimension of Tungsten	19/Nov/2015	S.Watanabe	1	Drawing number, Dimension of tungsten, Adjustment way (3 Point Kinematic)		
4	Dimension of Tungsten	24/Nov/2015	S.Watanabe	2	Support Structure, Dimension of Tungsten	05/Nov/2015	S.Watanabe			04/Nov/2015	S.Watanabe

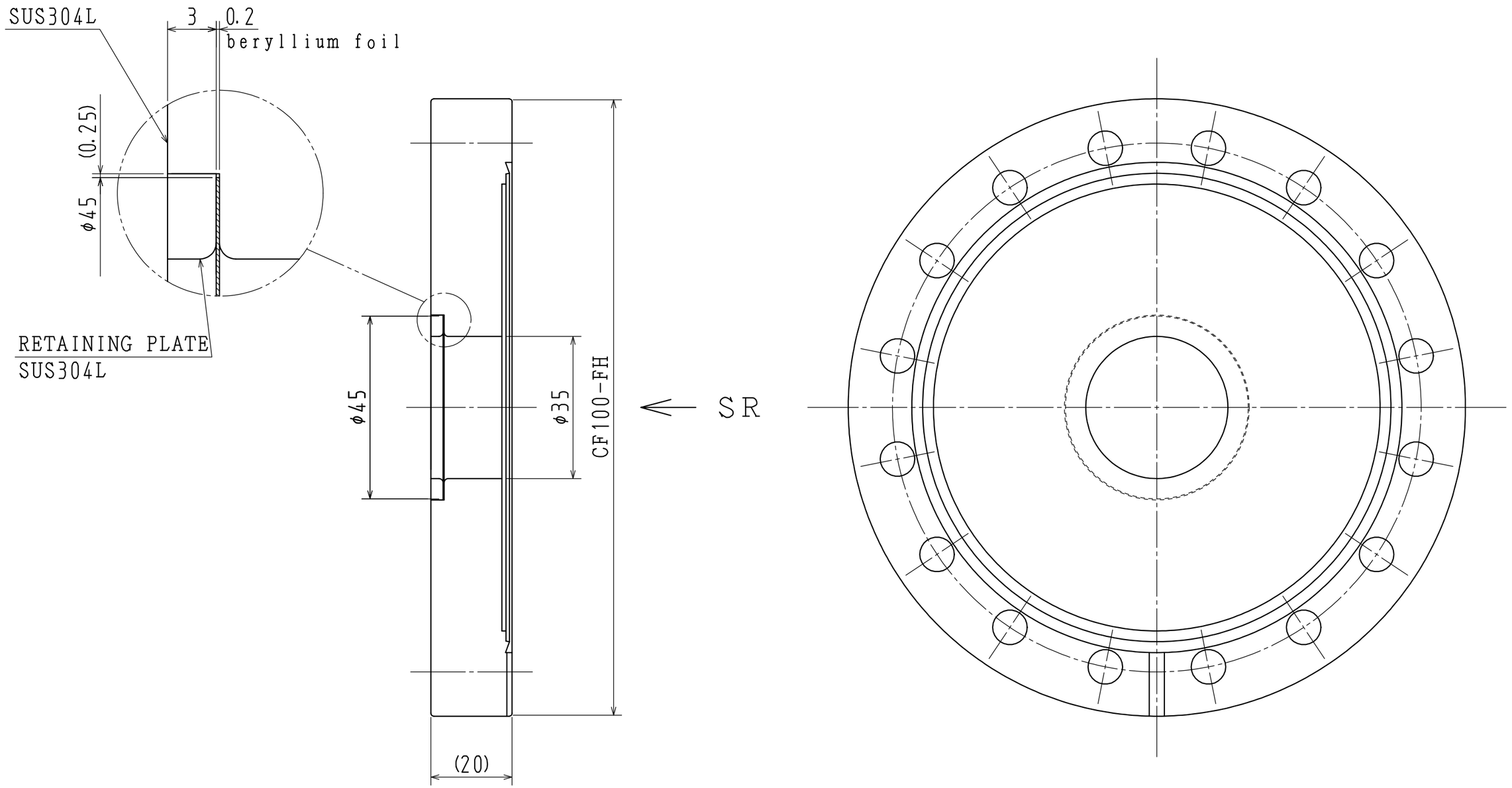

SPECIFICATION
THICKNESS: 0. 2mm
ROUGHNESS: 1μm
MATERIAL: IF1 (MATERION)

REV	MODIFICATION	DATE	MOD/BY
1	Beryllium spec. and its dimension	17/Nov/2015	S.Watanabe

CHECKED BY	DESIGNED BY	DRAWN BY	UNIT: mm
Akiyama	Watanabe	Watanabe	
17/Nov/2015	17/Nov/2015	17/Nov/2015	

TOYAMA CO.,LTD

TITLE
NSLSI/FXI Beamline Beryllium Window

SCALE 1:1

DWG No. 3AB-00137 △1

ICAD

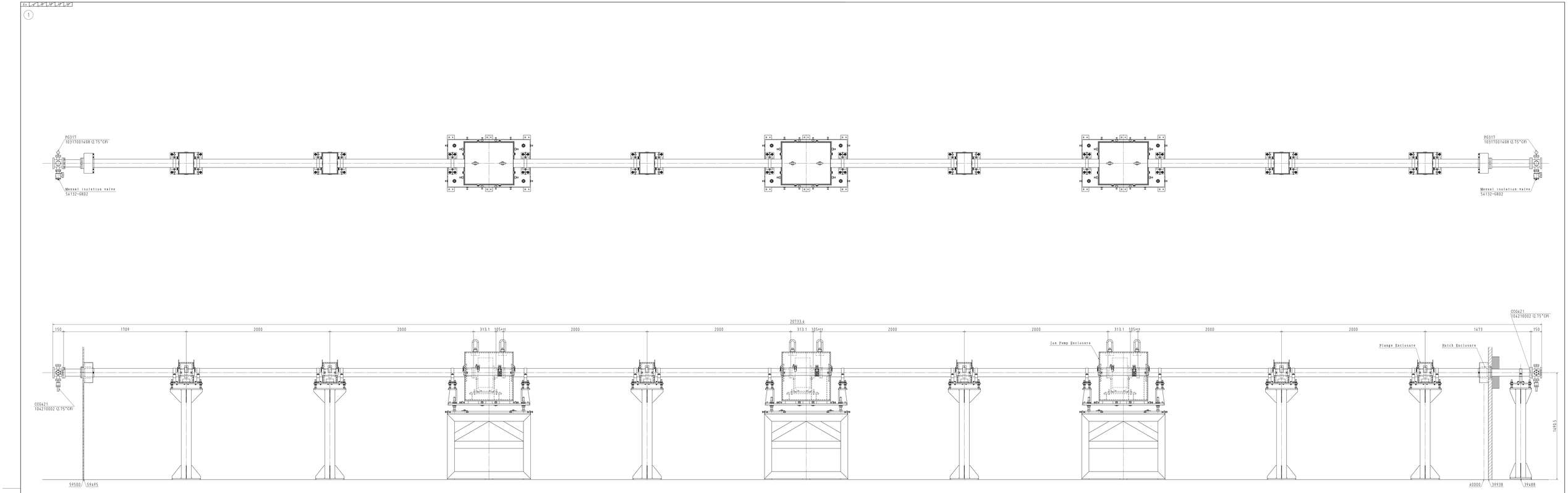

REV	MODIFICATION	DATE	MOD/BY	DRAWN BY	APPROVED BY	CHECKED BY	UNIT: mm	TITLE
△	-Ion pump port Geographic/reflection. -Shrink enclosure port Geographic/reflection. -support addition.	10/24/2015	K T	Ustanaka 13/04/2015	Tsuzawa 13/04/2015	Tsuzawa 13/04/2015		FXI Beam Transport System
				TOYAMA			SCALE 1:10	DWG. No. 0AB-01056

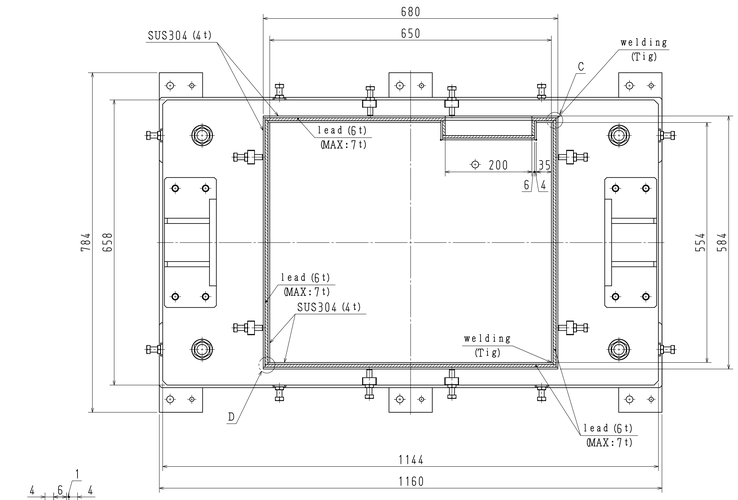

X-X section

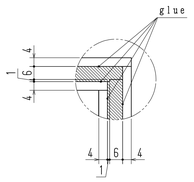

DETAIL:C
CORNER

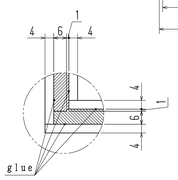

DETAIL:D
CORNER

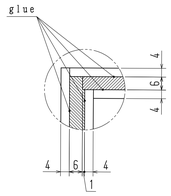

DETAIL:A
CORNER

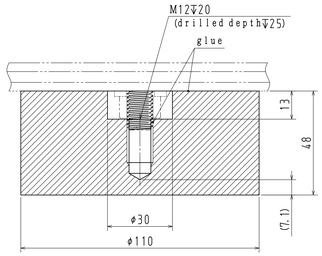

lead cap

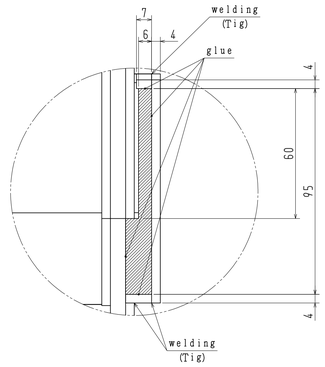

lead cover

Serial number	quantity
IPE01A	1
IPE01B	
IPE02A	1
IPE02B	
IPE03A	1
IPE03B	

*Serial number is divisible into A and B by the top and the bottom.

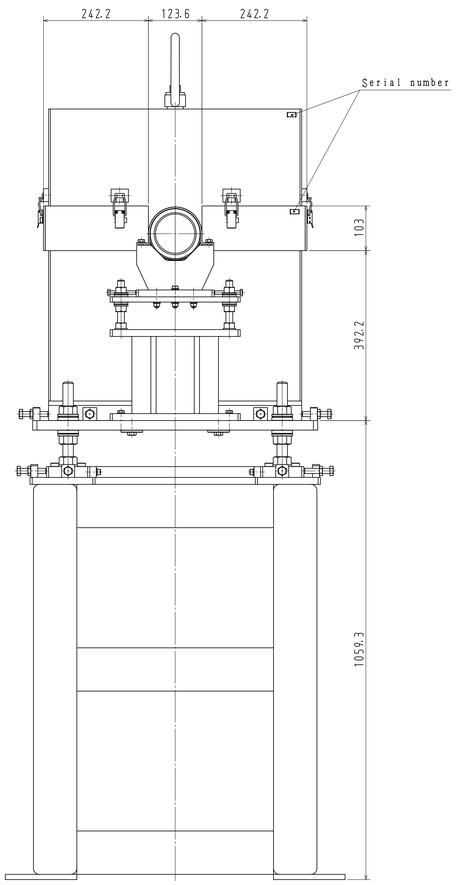

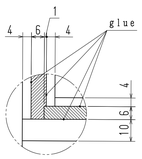

DETAIL:B
CORNER

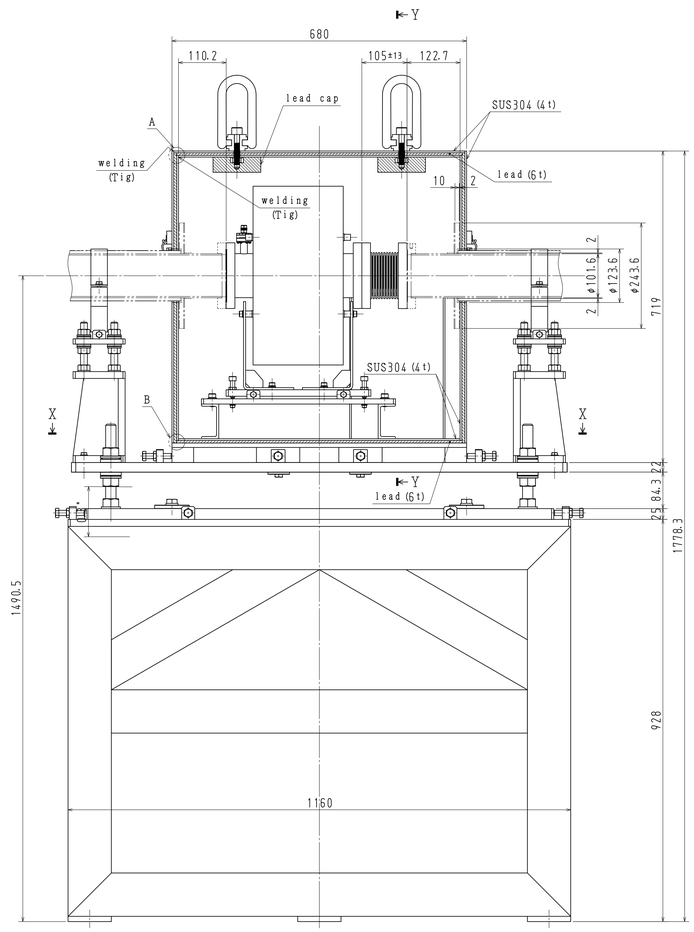

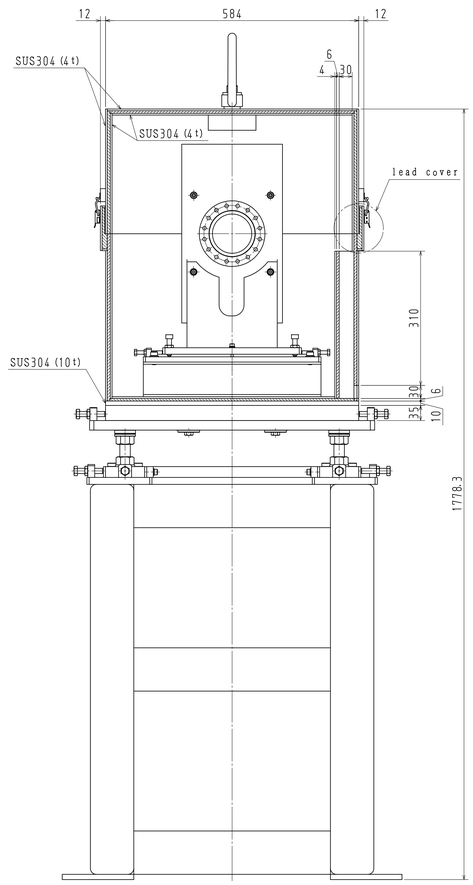

Y-Y section

*1) The gluing material used for lead is Araldite.
Name :Araldite
Manufacturer:Nagase chemteX Co.
Form :AW136H/HY994
Combination :100:40
*2) Lead won't be welded.
*3) SUS cover made Tig welding.
*4) The Serial numebers shall be marked by the vibration pen.
*5) Minus tolerance for the thickness of the lead is not allowed.

Approximate Weight : 530kg
(remove frame)

REV	MODIFICATION	DATE	MOD/BY
	・Painting direction deletes. ・Ion pump support construction changes.	19/Oct/2015	K T

CHECKED BY	DESIGNED BY	DRAWN BY	UNIT:mm	TITLE
Hatanaka	Tsuzawa	Tsuzawa		FXI Ion pump enclosure
23/Oct/2015	23/Oct/2015	23/Oct/2015		

TOYAMA co.,Ltd.

SCALE 1:5

DWG No. 0AJ-00069 A

quantity
6

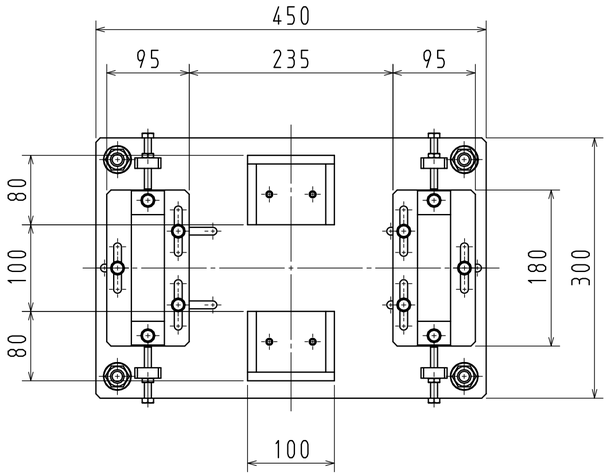

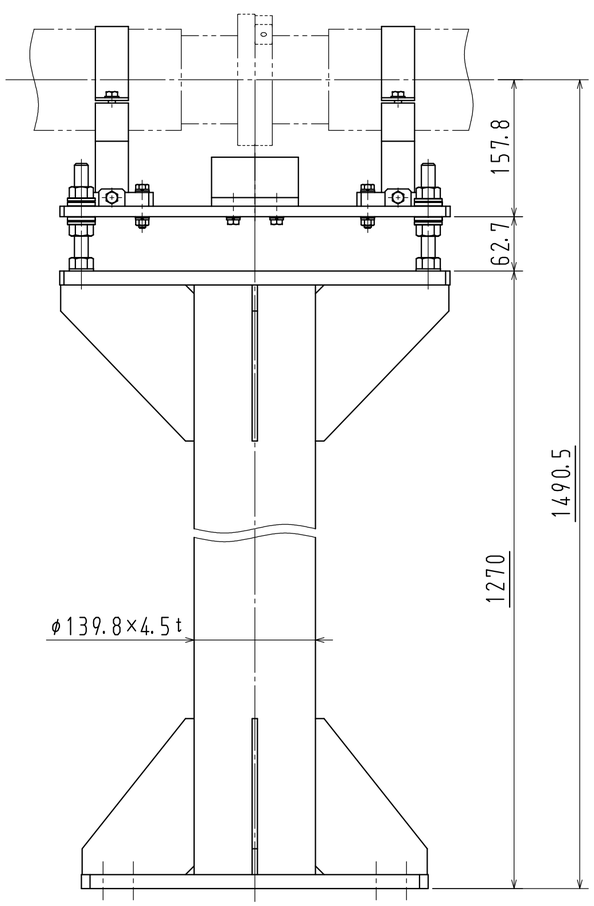

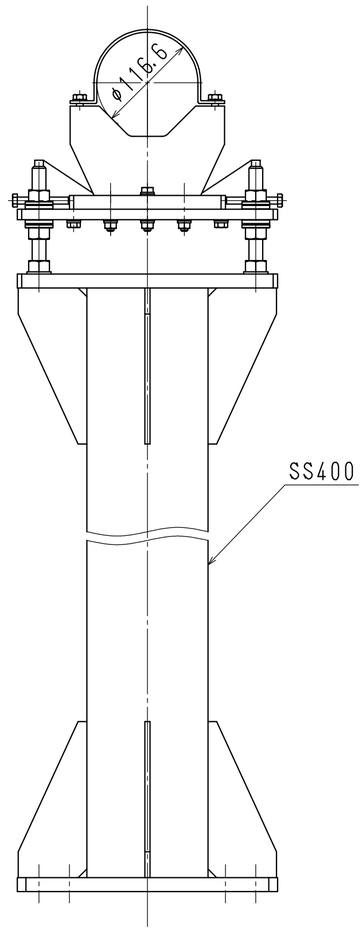

REV	MODIFICATION	DATE	MOD/BY

CHECKED BY	DESIGNED BY	DRAWN BY
Hatanaka	Tsuzawa	Tsuzawa
23/Oct/2015	23/Oct/2015	23/Oct/2015

TOYAMA co.,ltd

UNIT: mm

SCALE 1:5

TITLE FXI shield vacuum pipe support

DWG No. 2AD-00474 △0

ICAD

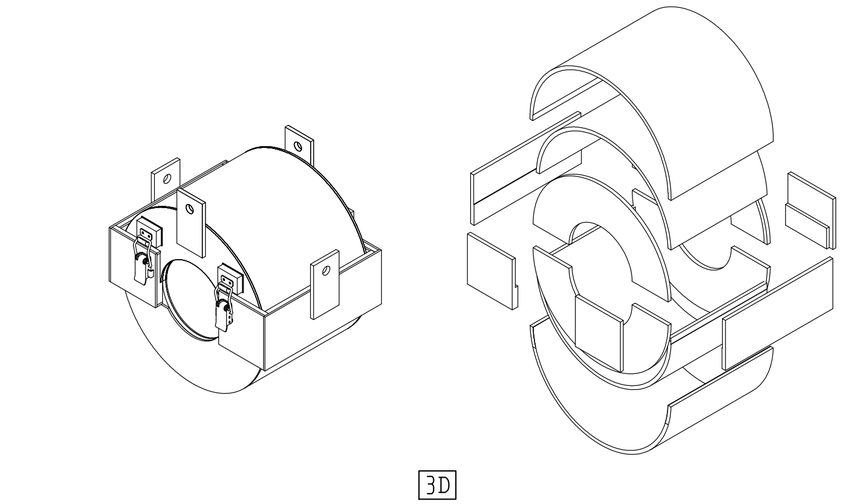

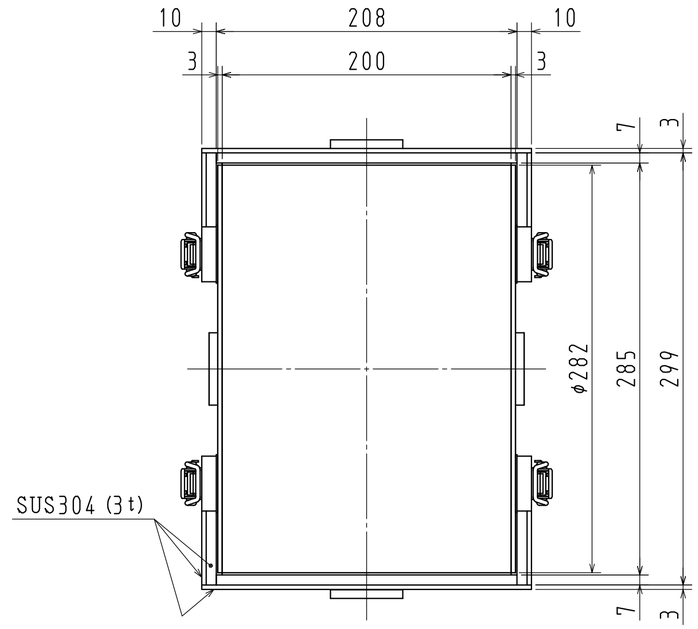

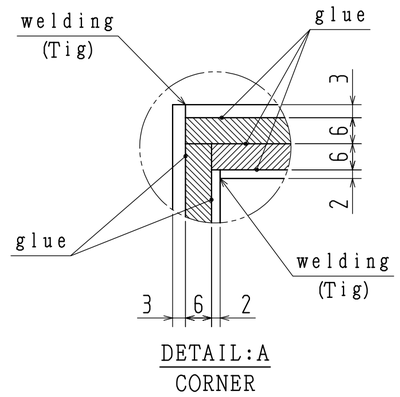

Serial number	quantity
FE01A	1
FE01B	
FE02A	1
FE02B	
FE03A	1
FE03B	
FE04A	1
FE04B	
FE05A	1
FE05B	
FE06A	1
FE06B	

*Serial number is divisible into A and B by the top and the bottom.

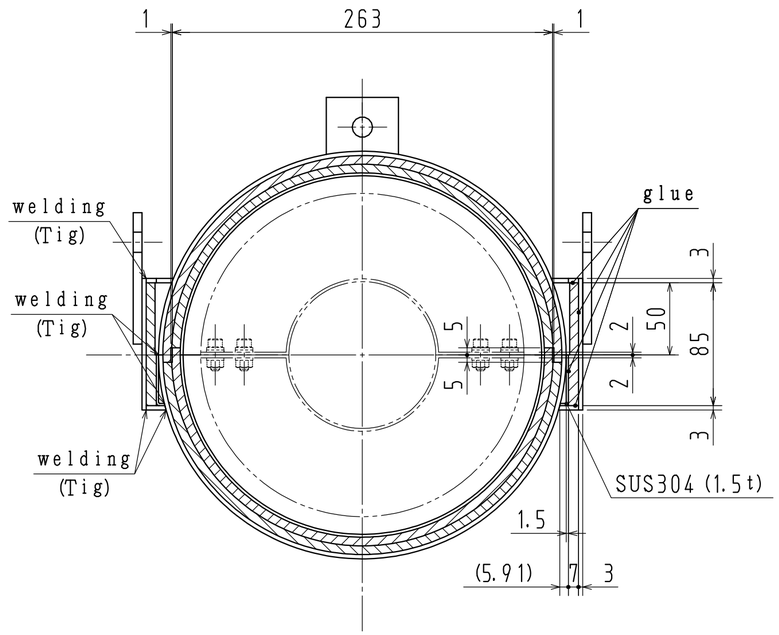

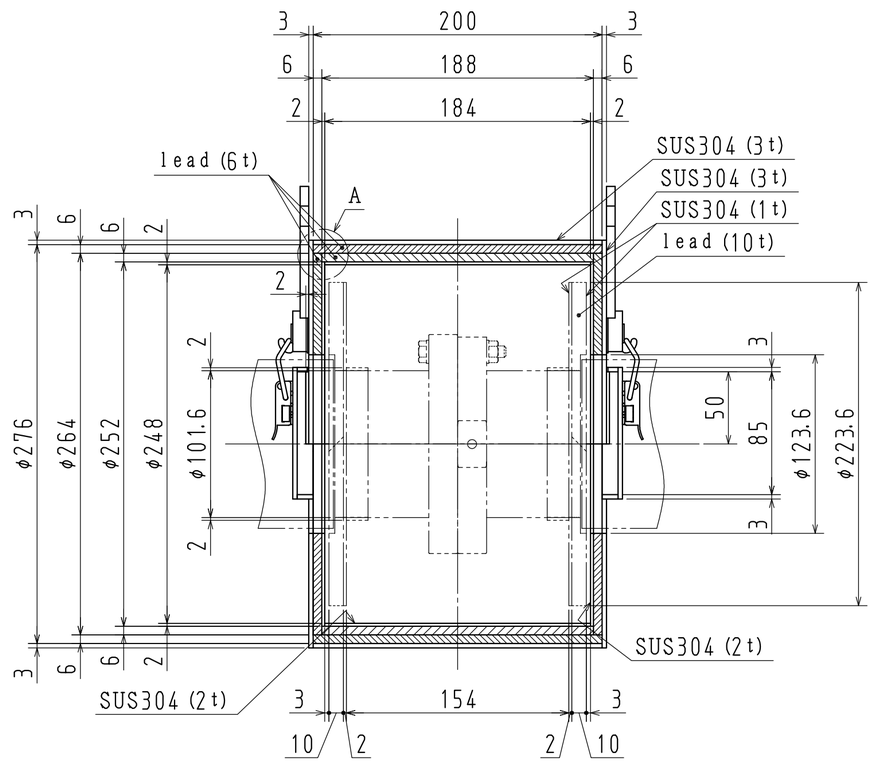

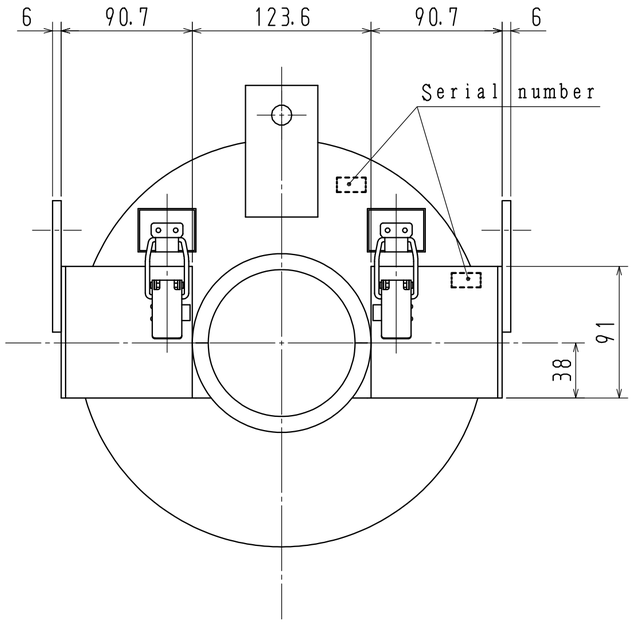

*1) The gluing material used for lead is Araldite.
Name :Araldite
Manufacturer:Nagase chemteX Co.
Form :AW136H/HY994
Combination :100:40
*2) Lead won't be welded.
*3) SUS cover made Tig welding.
*4) The Serial numebers shall be marked by the vibration pen.
*5) Minus tolerance for the thickness of the lead is not allowed.

Approximate Weight : 104kg

REV	MODIFICATION	DATE	MOD/BY

CHECKED BY	DESIGNED BY	DRAWN BY	UNIT:mm
Hatanaka 23/Oct/2015	Tsuzawa 23/Oct/2015	Tsuzawa 23/Oct/2015	

TOYAMA co.,Ltd

TITLE: FXI flange enclosure

SCALE: 1:3

DWG No. 2AJ-00768 ⚠0

ICAD

GNo	L1	L2	L3	⚠L4	⚠L5	Serial number	quantity
A	1473	66	592	104	0	VP01	1
B	2000	66	66	0	0	VP02	1
C	2000	99	66	0	0	VP03	1
D	2000	66	86	0	0	VP04	1
E	2000	99	66	0	0	VP05	1
F	2000	66	86	0	0	VP06	1
G	2000	99	66	0	0	VP07	1
H	2000	66	86	0	0	VP08	1
I	2000	66	66	0	0	VP09	1
J	1709	283	66	0	104	VP10	1

⚠*L4、L5 dimensions is SUS covers.

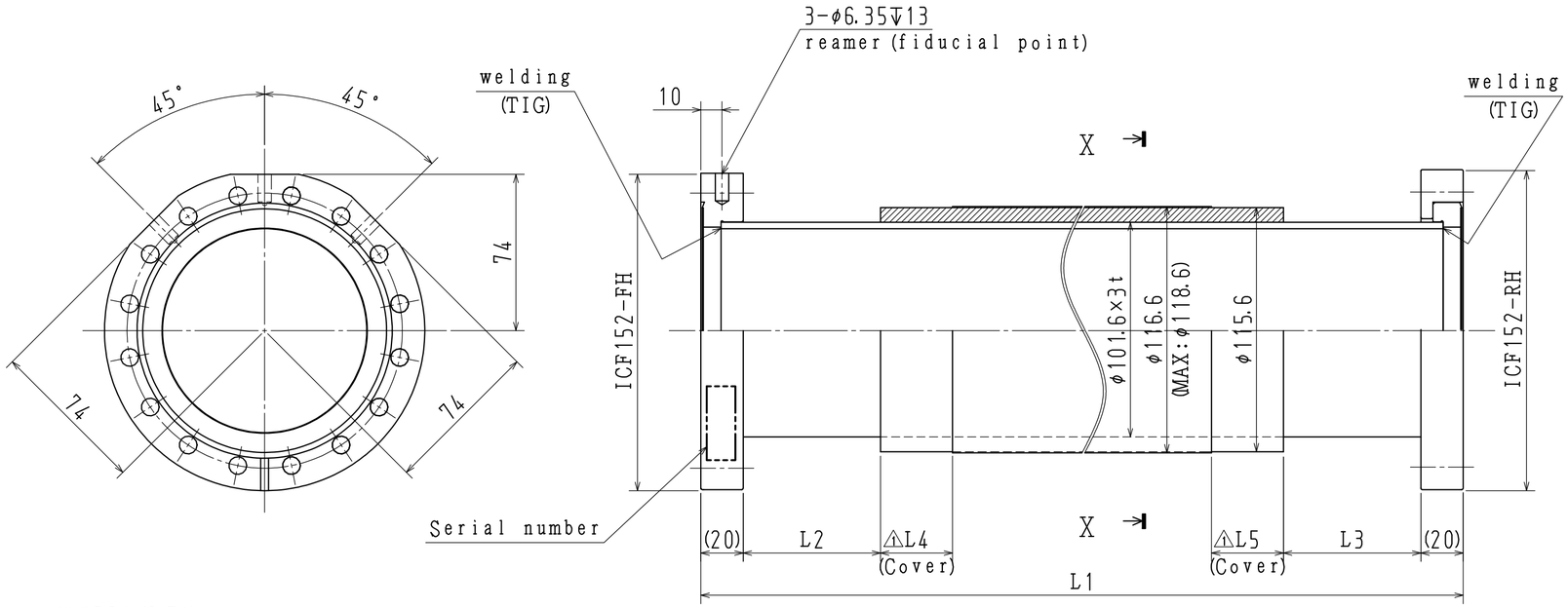

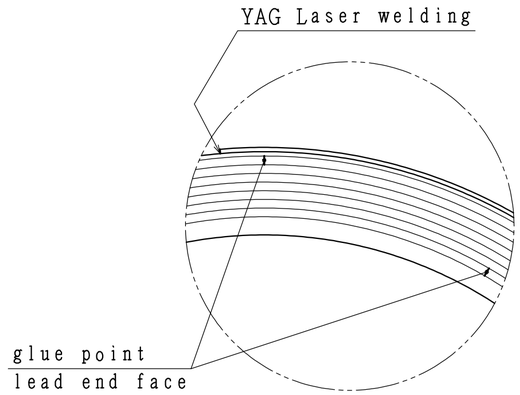

DETAIL:A

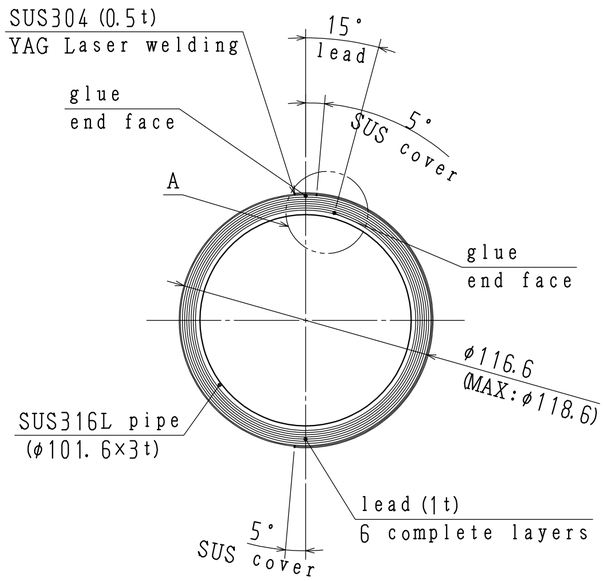

X-X section

*1) The gluing material used for lead is Araldite.
Name :Araldite
Manufacturer:Nagase chemteX Co.
Form :AW136H/HY994
Combination :100:40
*2) Lead won't be welded.
*3) SUS cover made YAG Laser welding.
Voltage:555[V] Pulse:30[PPS]
*4) The serial numbers shall be marked by the vibration pen.
*5) Minus tolerance for the thickness of the lead is not allowed.
*6) Maximum other diameter is specified as target value.

NOTE
1). Pipe material :SUS316L
2). Flange material:SUS304L

REV	MODIFICATION	DATE	MOD/BY
⚠	L4,L5 adittion.	19/Oct/2015	K T

CHECKED BY	DESIGNED BY	DRAWN BY	UNIT:mm	TITLE
Hatanaka	Tsuzawa	Tsuzawa		FXI Shield vacuum pipe
23/Oct/2015	23/Oct/2015	23/Oct/2015		

TOYAMA co.,Ltd

SCALE 1:2

DWG No. 2BE-00203 ⚠

ICAD

quantity
2

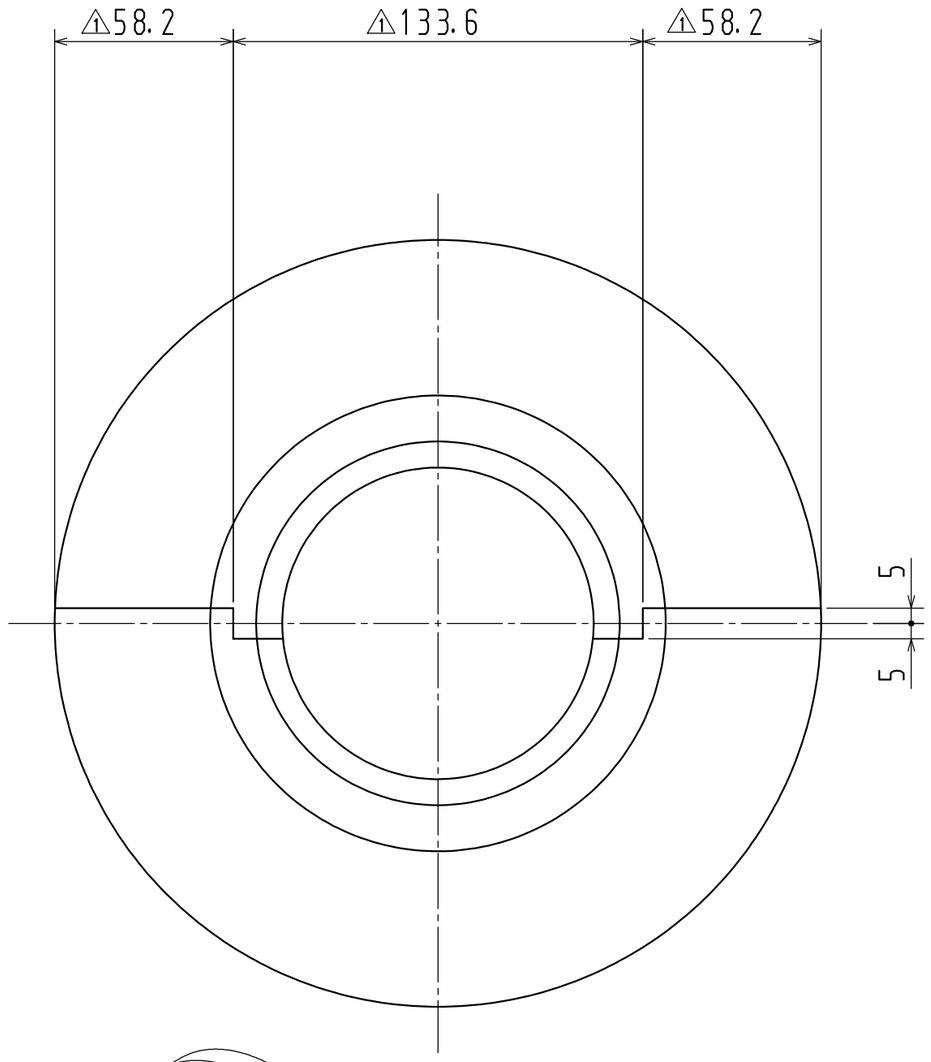

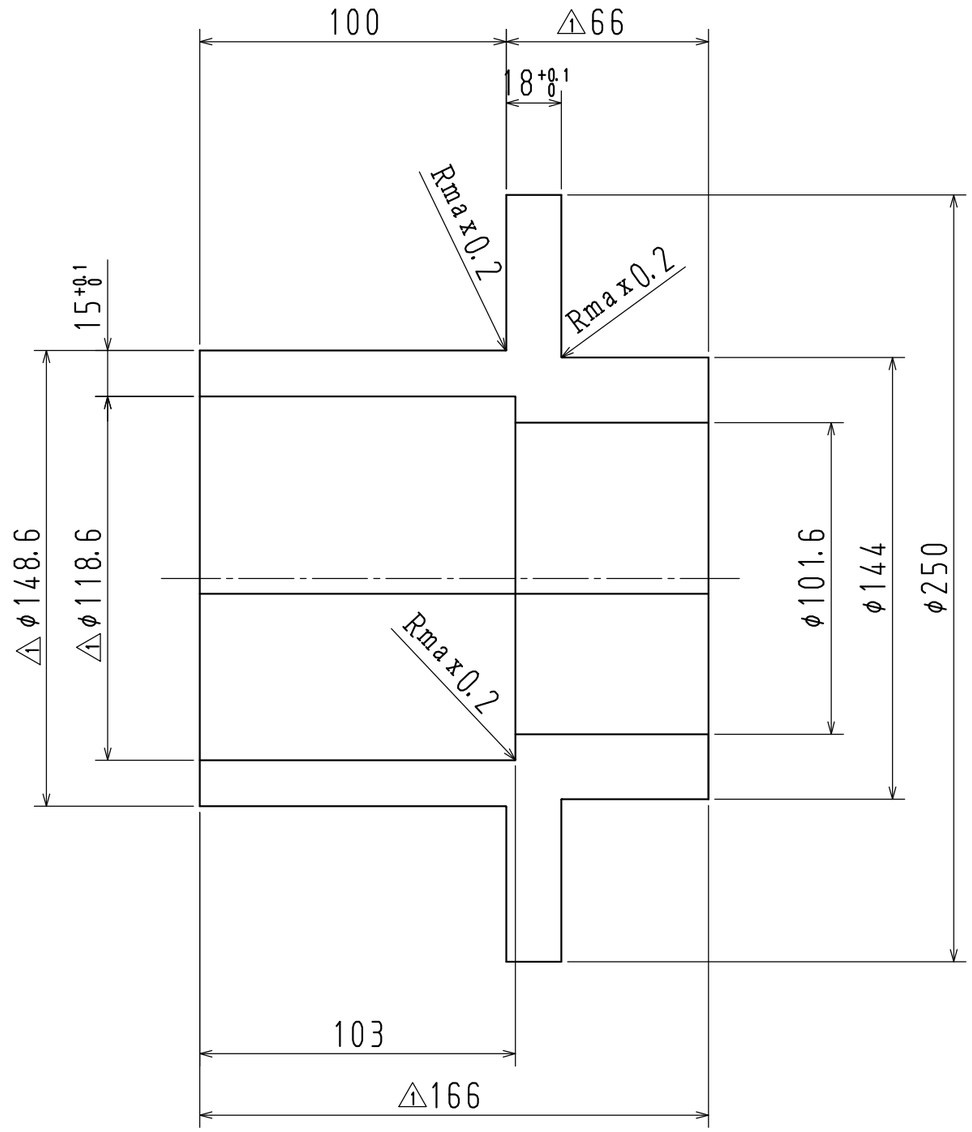

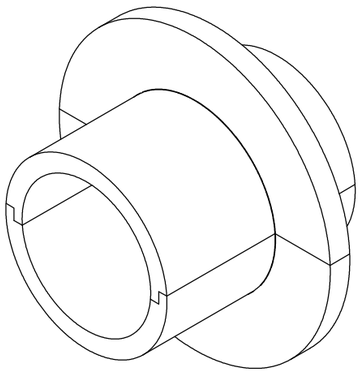

3D

Approximate Weight : 20kg

REV	MODIFICATION	DATE	MOD/BY
△1	Dimension changes.	19/Oct/2015	K T

CHECKED BY	DESIGNED BY	DRAWN BY
Hatanaka	Tsuzawa	Tsuzawa
23/Oct/2015	23/Oct/2015	23/Oct/2015

UNIT: mm

TITLE: FXI Beam transport hutch enclosure

TOYAMA CO.,LTD

SCALE: 1:2

DWG No. 3AJ-00719 △1

ICAD

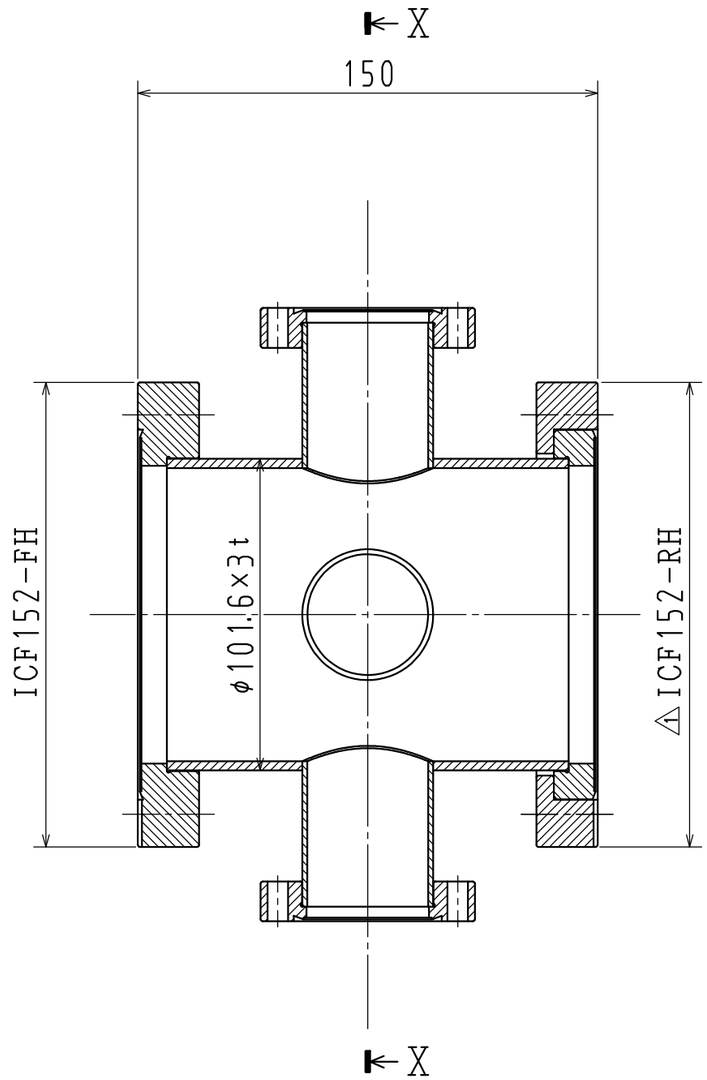

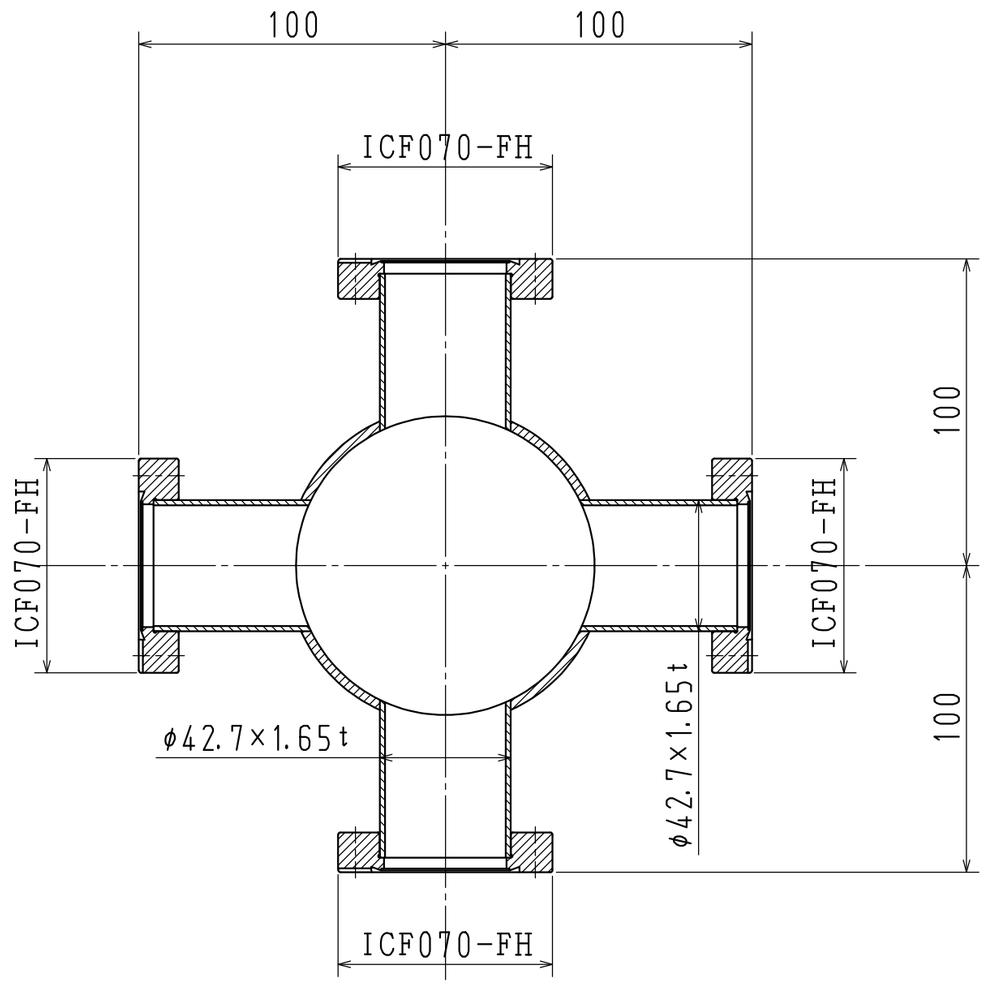

X-X section

NOTE

1). Pipe material :SUS316L

2). Flange material:SUS304L

				CHECKED BY	DESIGNED BY	DRAWN BY	UNIT:mm	TITLE
				Hatanaka	Tsuzawa	Tsuzawa		6-way vacuum cross
				23/Oct/2015	23/Oct/2015	23/Oct/2015		
△1	flange changes.	19/Oct/2015	K.T	TOYAMA CO.,LTD			SCALE 1:2	DWG No. 3BB-00477 △1
REV	MODIFICATION	DATE	MOD/BY					

ICAD

quantity
1

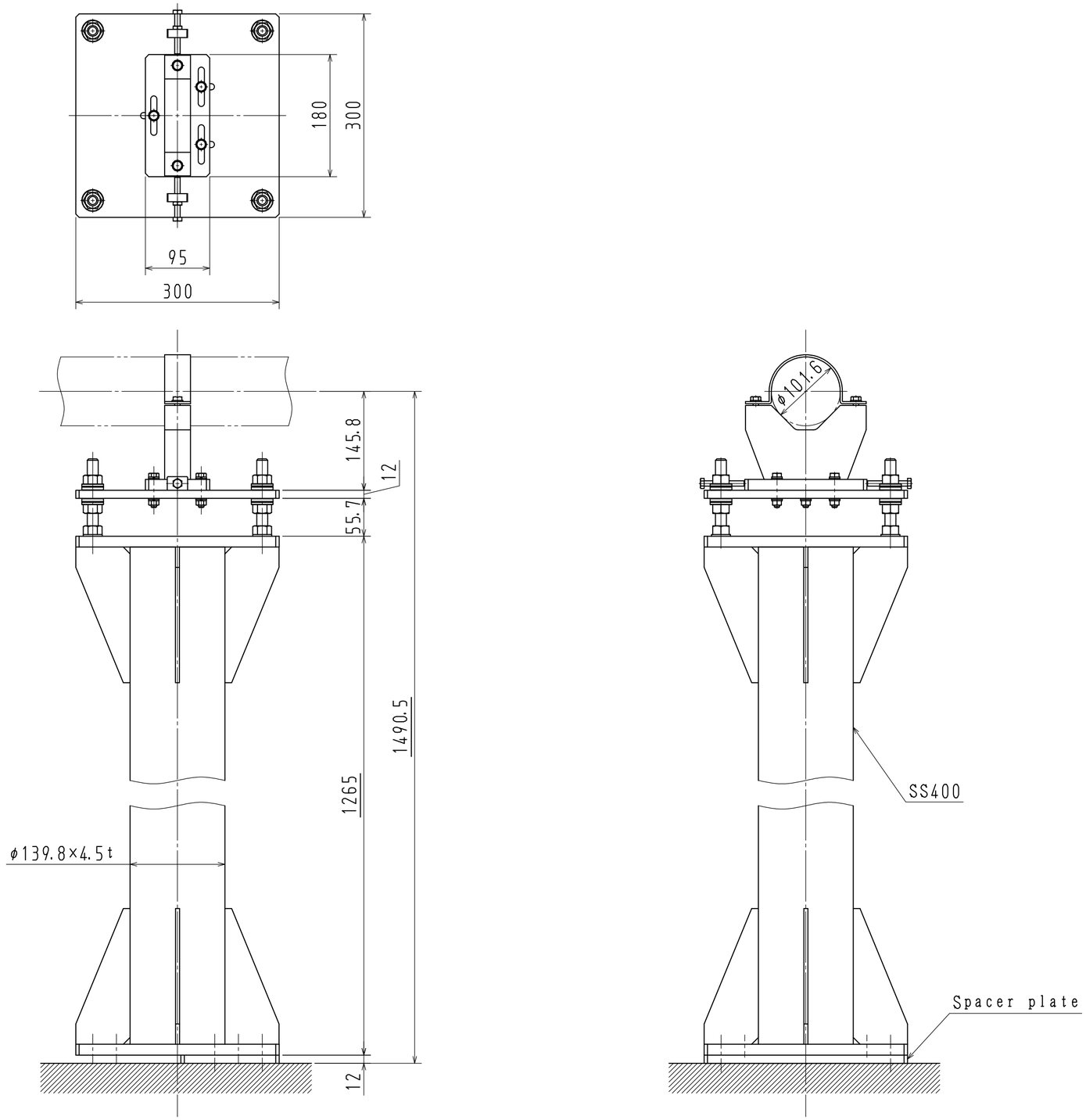

REV	MODIFICATION	DATE	MOD/BY

CHECKED BY	DESIGNED BY	DRAWN BY	UNIT:mm
Hatanaka	Tsuzawa	Tsuzawa	
20/Nov/2015	19/Nov/2015	19/Nov/2015	

TOYAMA co.,Ltd

SCALE 1:1

TITLE FXI vacuum pipe support

DWG No. 2AD-00475 △0

ICAD

TABLE OF TOLERANCED DIMENSIONS (mm)

LINE	DESCRIPTION	NOMINAL	±	FABRICATION	±	POSITION	±	CLEARANCE	=	TOTAL
1	FIXED MASK DS APERTURE	5.8	+	0.36	+	0.44		-	=	6.6
2	FIXED MASK US APERTURE	42	+	0.36	+	0.44		-	=	42.8
3	WBST+PBM DS APERTURE	6.8	+	0.36	+	0.44		-	=	7.6
4	WBST+PBM US APERTURE	46	+	0.36	+	0.44		-	=	46.8

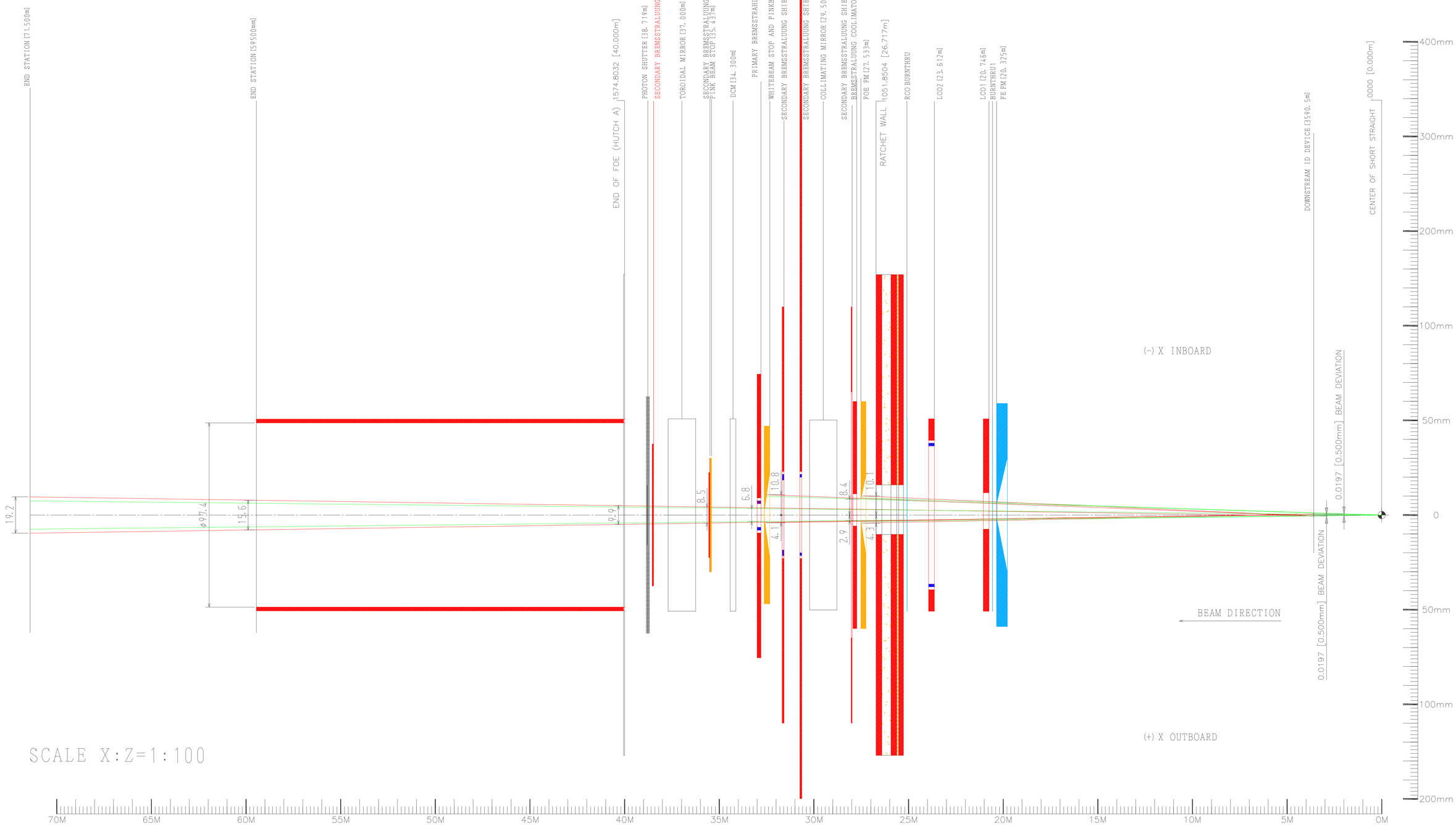

SCALE X:Z=1:100

Reference: PD-FXI-RAYT-0001 SHEET1 REV. 2
SR-FE-DW18-1001 SHEET2 REV. B

NOTES:

1. IN THIS RAYTRACE, THE DOWNSTREAM APERTURE OF THE FOE FM ASSUMES THE UPGRADE SCENARIOSIZE.
2. POSITION TOLERANCE: 0.22mm
   MANUFACTURING TOLERANCE: 0.18mm

REV	MODIFICATION	DATE	MOD/BY
5	Rearrangement of components as latest layout.	24/Nov/2015	S.Watanabe
4	HCO Burn through is included, SBS-Q is included. Rearrangement of components as latest layout.	19/Nov/2015	S.Watanabe
3	Burn through device, LCO1, LCO2, HCO and Ratchetwall are included. Rearrangement of components as latest layout. lines are colored. SR lines are extended to the end of the end station.	09/Nov/2015	S.Watanabe
2	Addition of shielding components of Frontend Rearrangement of components as latest layout.	28/Oct/2015	S.Watanabe
1	Modification of front-end starting point listed in SR-FE-DW18-1001 rev.B. Rearrangement of components as latest layout.	28/Aug/2015	S.Watanabe

CHECKED BY | DESIGNED BY | DRAWN BY: Watanabe 24/Nov/2015

TOYAMA co.,ltd

UNIT: mm | SCALE

TITLE: FXI RAYTRACING SYNCHROTRON HORIZONTAL

DWG No. 1AA-00052 △5 ICD

TABLE OF TOLERANCED DIMENSIONS (mm)

LINE	DESCRIPTION	NOMINAL	±	FABRICATION	±	POSITION	±	CLEARANCE	=	TOTAL
1	FIXED MASK DS APERTURE	5.8	+	0.36	+	0.44		-	=	6.6
2	FIXED MASK US APERTURE	28	+	0.36	+	0.44		-	=	28.8
3	WBST+PBM DS APERTURE	6.8	+	0.36	+	0.44		-	=	7.6
4	WBST+PBM US APERTURE	68	+	0.36	+	0.44		-	=	68.8

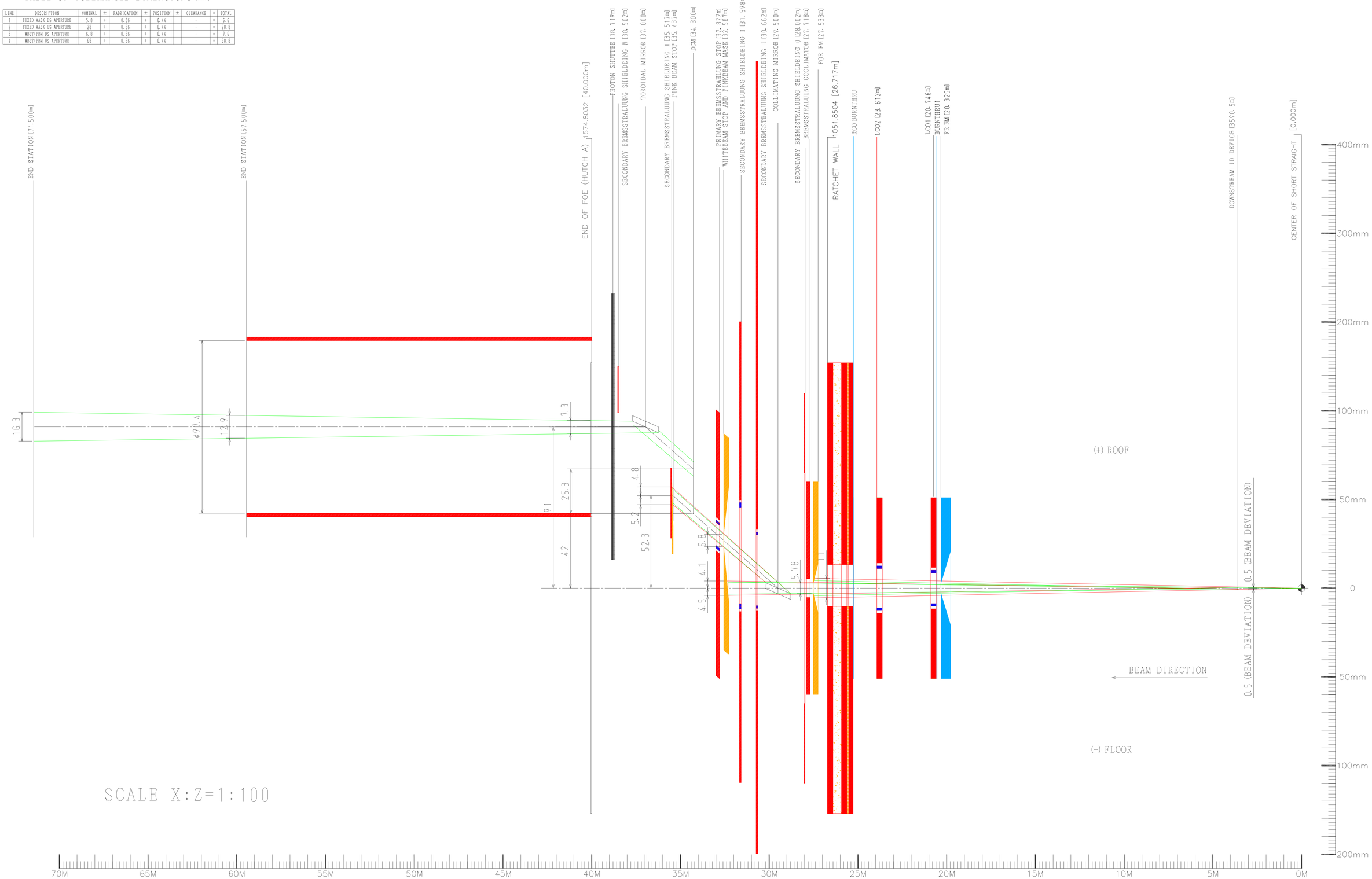

Reference:PD-FXI-RAYT-0001 SHEET1 REV. 2
SR-FE-DW18-1001 SHEET2 REV. B

NOTES:

1. IN THIS RAYTRACE,THE DOWNSTREAM APERTURE OF THE FOE FM ASSUMES THE UPGRADE SCENARIOSIZE.
2. POSITION TOLERANCE:0.22mm
MANUFACTURING TOLERANCE:0.18mm

REV	MODIFICATION	DATE	MOD/BY
5	Rearrangement of components as latest layout.	24/Nov/2015	S.Watanabe
4	RCO,Burn through is included, SBG-0 is included. Rearrangement of components as latest layout.	19/Nov/2015	S.Watanabe
3	Burn through device, LCO1, LCO2, RCO and Ratchetwall is included. Rearrangement of components as latest layout. lines are colored. SR lines are extended to the end of the end station.	09/Nov/2015	S.Watanabe
2	Addition of shielding components of Frontend and Transport pipe. Rearrangement of components as latest layout.	28/Oct/2015	S.Watanabe
1	Modification of front-end starting point using SR-FE-DW18-1001 rev.B. Rearrangement of components as latest layout.	28/Aug/2015	S.Watanabe

CHECKED BY | DESIGNED BY | DRAWN BY: Watanabe 24/Nov/2015

TOYAMA co.,ltd

UNIT:mm

SCALE

TITLE: FXI RAYTRACING SYNCHROTRON VERTICAL

DWG No. 1AA-00053 △1

ICAD

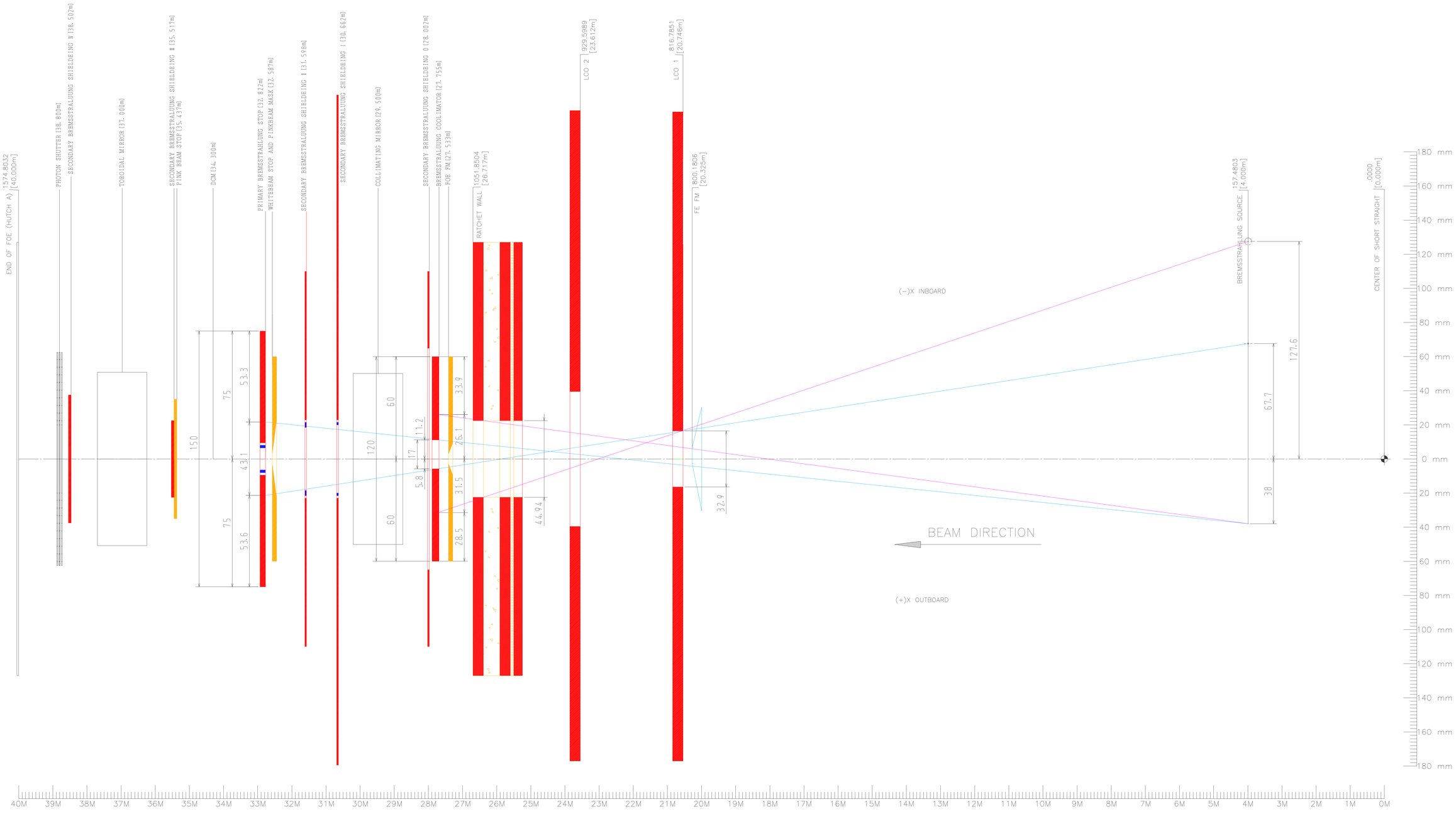

Reference: PD-FXI-RAYT-0001 SHEET3 REV. 2
SR-FE-DW18-1001 SHEET4 REV. B

SCALE X:Z=1:50

NOTES:
1. IN THIS RAYTRACE, THE DOWNSTREAM APERTURE OF THE FOE FM ASSUMES THE UPGRADE SCENARIOSIZE.

REV	MODIFICATION	DATE	MOD/BY
5	Rearrangement of components as latest layout.	24/Nov/2015	S.Watanabe
4	SRS-Q is included, Rearrangement of components as latest layout. lines are colored.	09/Nov/2015	S.Watanabe
3	Rearrangement of components as latest layout.	19/Nov/2015	S.Watanabe
2	Rearrangement of components as our layout.	28/Aug/2015	S.Watanabe
1	Modification of front-end starting point listed in SR-FE-DW18-1001 rev.B.		

CHECKED BY | DESIGNED BY | DRAWN BY Watanabe | 24/Nov/2015

UNIT: mm

TITLE FXI RAYTRACING BREMSSTRALUNG HORIZONTAL

SCALE | DWG No. 1AA-00054 △5 | 1/5

TOYAMA CO.,LTD.

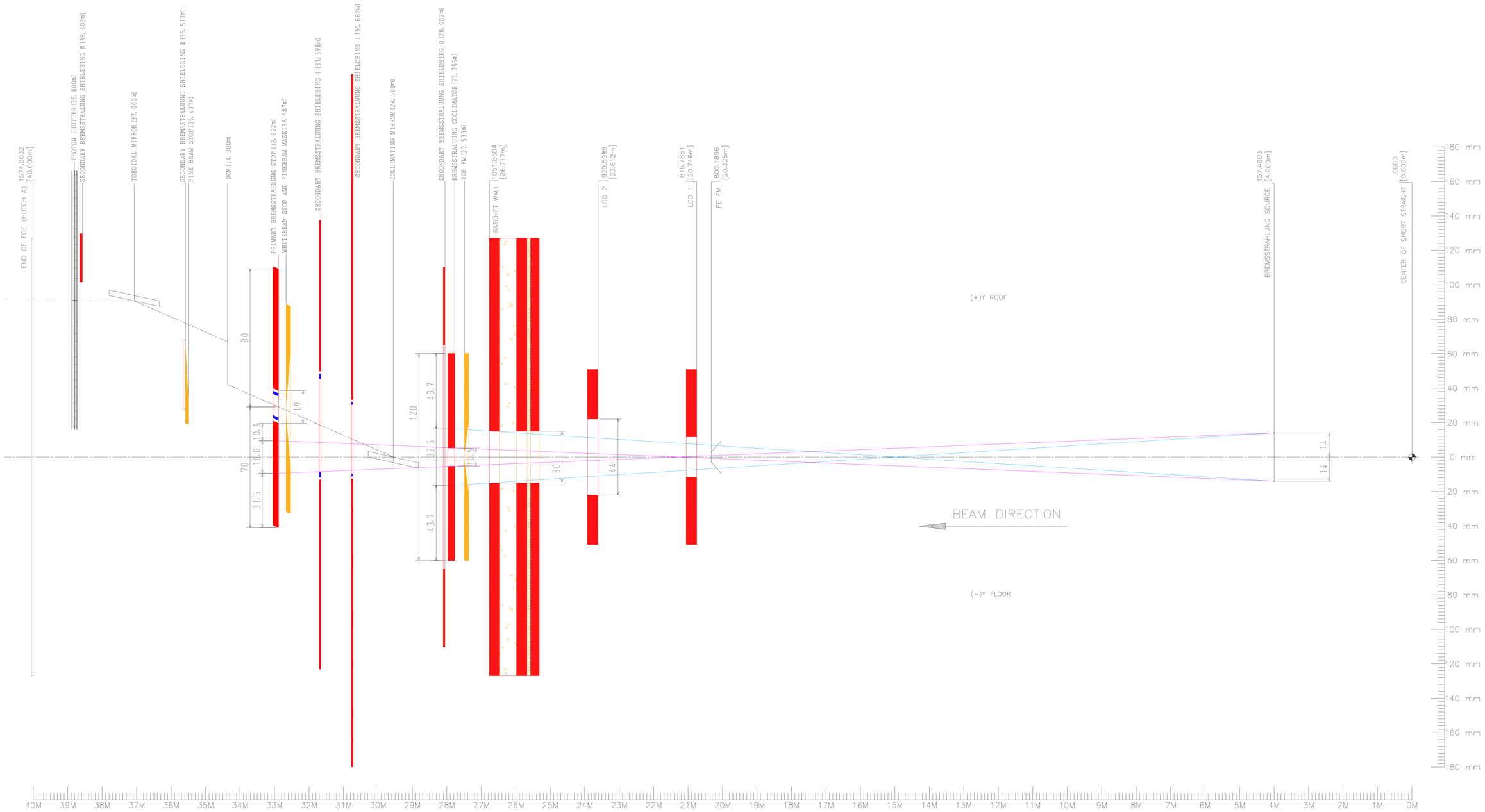

SCALE X:Z=1:50

NOTES:

1. IN THIS RAYTRACE,THE DOWNSTREAM APERTURE OF THE FOE FM ASSUMES THE UPGRADE SCENARIOSIZE.

Reference:PD-FXI-RAYT-0001 SHEET4 REV. 2
SR-FE-DW18-1001 SHEET5 REV. B

REV	MODIFICATION	DATE	MOD/BY
5	Rearrangement of components as latest layout.	24/Nov/2015	S.Watanabe
4	SBS-D is included, Rearrangement of components as latest layout.	25/Nov/2015	S.Watanabe
3	Rearrangement of components as latest layout.	19/Nov/2015	S.Watanabe
2	Rearrangement of components as latest layout.	04/Nov/2015	S.Watanabe
1	Modification of front-end starting point listed in SR-FE-DW18-1001 rev.B.	28/Aug/2015	S.Watanabe
	Rearrangement of components as our layout.		

CHECKED BY	DESIGNED BY	DRAWN BY
		Watanabe
		24/Nov/2015

TOYAMA CO.,LTD.

UNIT: mm

SCALE

TITLE: FXI RAYTRACING BREMSSTRALUNG VERTICAL

DWG No. 1AA-00055 A

TABLE OF TOLERANCED DIMENSIONS (mm)

LINE	DESCRIPTION	NOMINAL	±	FABRICATION	±	POSITION	±	CLEARANCE	=	TOTAL
1	FIXED MASK DG APERTURE	5.8	+	0.36	+	0.44		-	=	6.6
2	FIXED MASK UG APERTURE	42	+	0.36	+	0.44		-	=	42.8
3	WBST+PBM DG APERTURE	6.8	+	0.36	+	0.44		-	=	7.6
4	WBST+PBM UG APERTURE	46	+	0.36	+	0.44		-	=	46.8

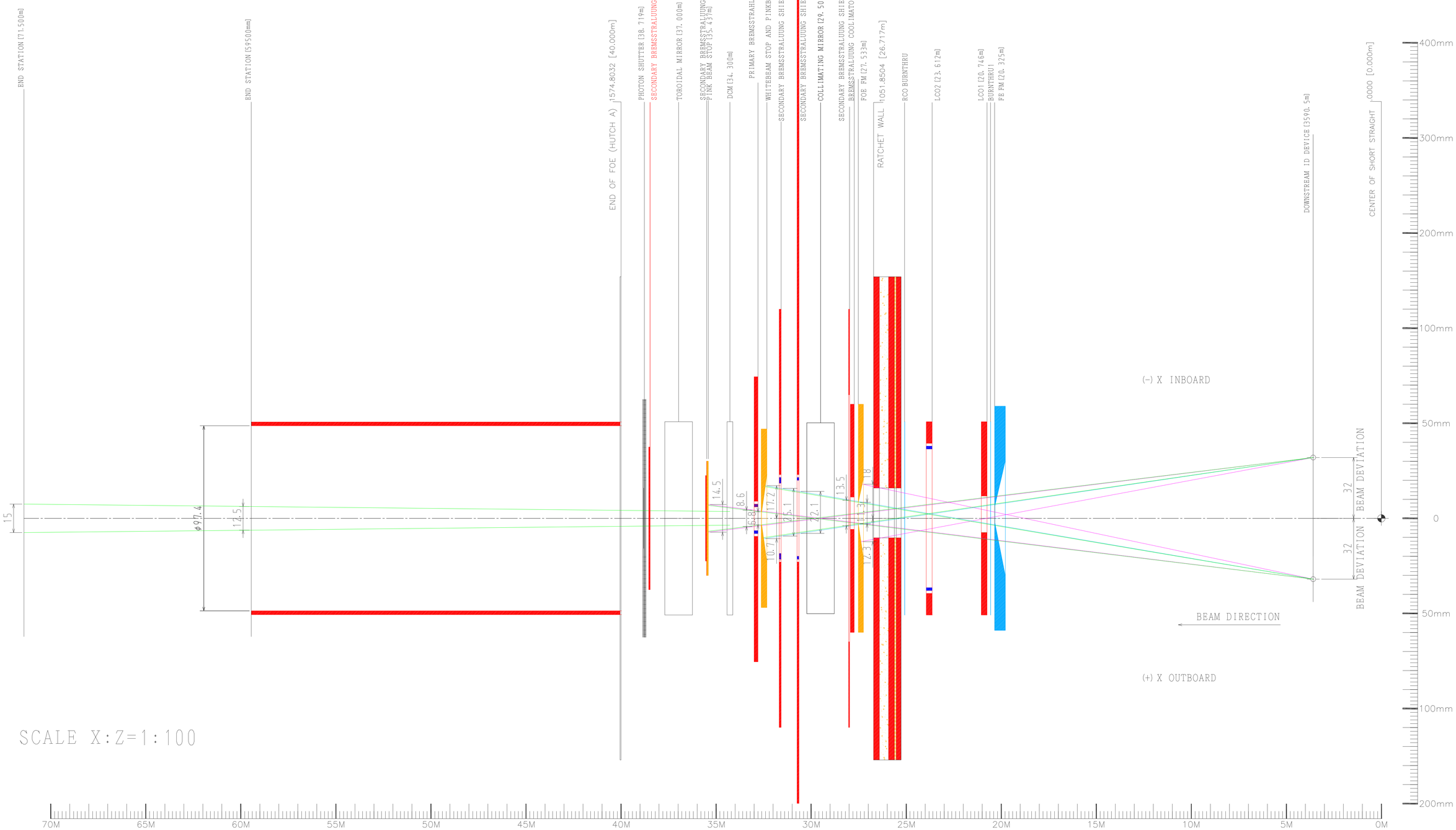

SCALE X:Z=1:100

Reference: PD-FXI-RAYT-0001 SHEET5 REV. 2
SR-FE-DW18-1001 REV. B

NOTES:

1. IN THIS RAYTRACE, THE DOWNSTREAM APERTURE OF THE FOE FM ASSUMES THE UPGRADE SCENARIOSIZE.
2. POSITION TOLERANCE: 0.22mm
   MANUFACTURING TOLERANCE: 0.18mm

REV	MODIFICATION	DATE	MOD/BY
5	Rearrangement of components as latest layout.	24/Nov/2015	S.Watanabe
4	RCO Burn through is included, SBS-O is included.		
	Rearrangement of components as latest layout.	19/Nov/2015	S.Watanabe

REV	MODIFICATION	DATE	MOD/BY
3	Burn through device, LCO1, LCO2, RCO and Ratchetwall is included.		
	Rearrangement of components as latest layout.		
	Lines are colored, Nominal SR lines are removed.		
	SR lines are extended to the end of the end station.	09/Nov/2015	S.Watanabe

REV	MODIFICATION	DATE	MOD/BY
2	Addition of shielding components of Frontend		
	Rearrangement of components as latest layout.	28/Oct/2015	S.Watanabe
1	Modification of front-end starting point using SR-FE-DW18-1001 rev B.		
	Rearrangement of components as our layout.	28/Aug/2015	S.Watanabe

CHECKED BY	
DESIGNED BY	
DRAWN BY	Watanabe 24/Nov/2015
UNIT: mm	
TITLE	FXI RAYTRACING MAXIMUM SYNCHROTRON RAYTRACE HORIZONTAL
SCALE	
DWG No.	1AA-00056

TOYAMA co.,ltd

TABLE OF TOLERANCED DIMENSIONS (mm)

LINE	DESCRIPTION	NOMINAL	±	FABRICATION	±	POSITION	±	CLEARANCE	=	TOTAL
1	FIXED MASK DS APERTURE	5.8	+	0.36	+	0.44		-	=	6.6
2	FIXED MASK US APERTURE	28	+	0.36	+	0.44		-	=	28.8
3	WBST+FBM DS APERTURE	6.8	+	0.36	+	0.44		-	=	7.6
4	WBST+FBM US APERTURE	68	+	0.36	+	0.44		-	=	68.8

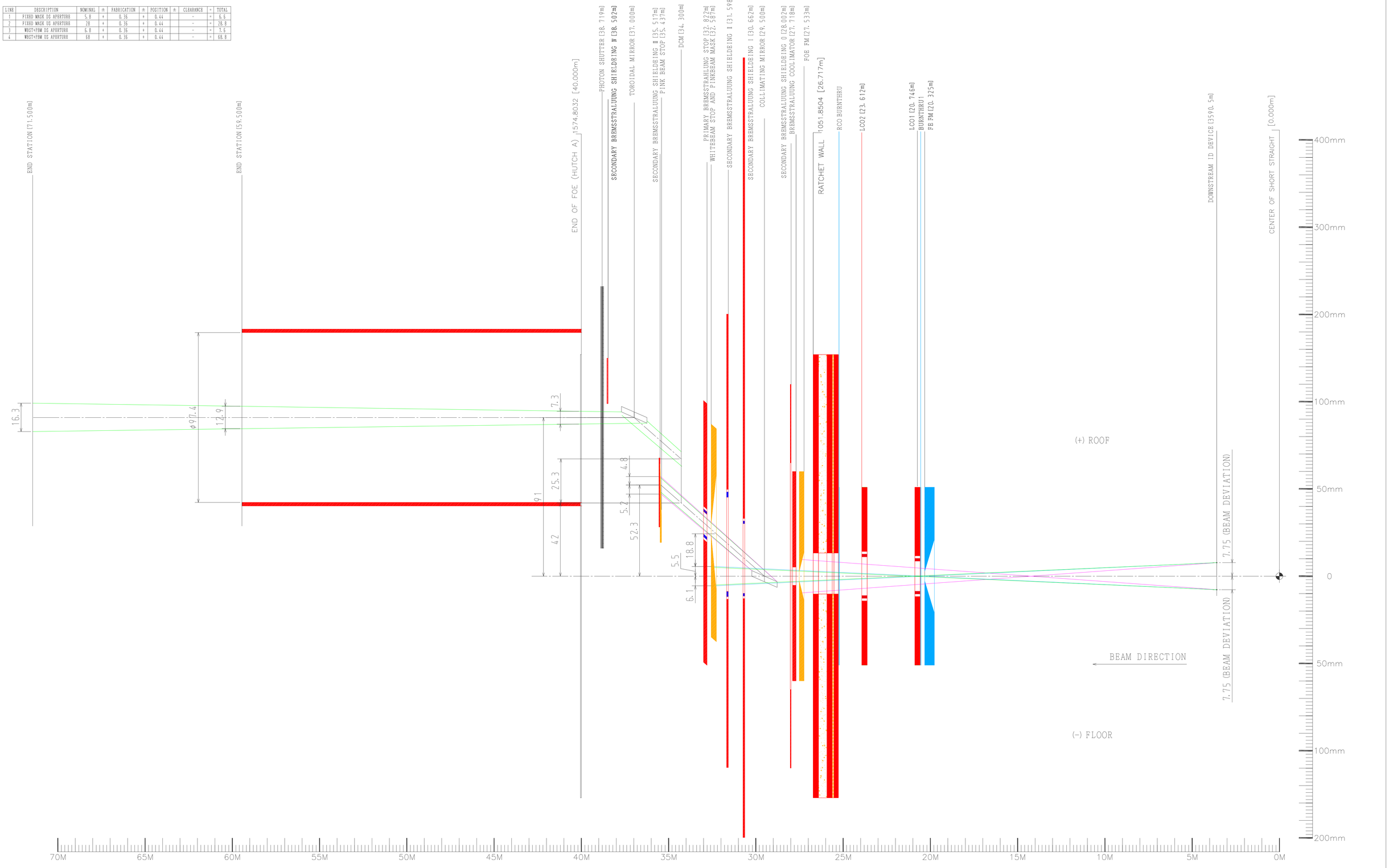

Reference: PD-FXI-RAYT-0001 SHEET1 REV. 2
SR-FE-DW18-1001 SHEET2 REV. B

NOTES:

1. IN THIS RAYTRACE, THE DOWNSTREAM APERTURE OF THE FOE FM ASSUMES THE UPGRADE SCENARIOSIZE.
2. POSITION TOLERANCE: 0.22mm
   MANUFACTURING TOLERANCE: 0.18mm

REV	MODIFICATION	DATE	MOD/BY
5	Rearrangement of components as latest layout.	24/Nov/2015	S.Watanabe
4	RCO Burn through is included, SBS-0 is included.		
	Rearrangement of components as latest layout.	19/Nov/2015	S.Watanabe

REV	MODIFICATION	DATE	MOD/BY
3	Burn through device, LCO1, LCO2, RCO and Ratchetwall is included.		
	Rearrangement of components as latest layout.		
	lines are colored.		
	SR lines are extended to the end of the end station.	09/Nov/2015	S.Watanabe

REV	MODIFICATION	DATE	MOD/BY
2	Addition of shielding components of Frontend and Transport pipe		
	Rearrangement of components as latest layout.	28/Oct/2015	S.Watanabe
1	Modification of front-end starting point using SR-FE-DW18-1001 rev.B.		
	Rearrangement of components as latest layout.	28/Aug/2015	S.Watanabe

CHECKED BY	DESIGNED BY	DRAWN BY	UNIT: mm
		Watanabe	
		24/Nov/2015	
SCALE			

TOYAMA CO.,LTD.

TITLE: FXI RAYTRACING MAXIMUM SYNCHROTRON RAYTRACE VERTICAL

DWG No. 1AA-00057 △5

ICAD

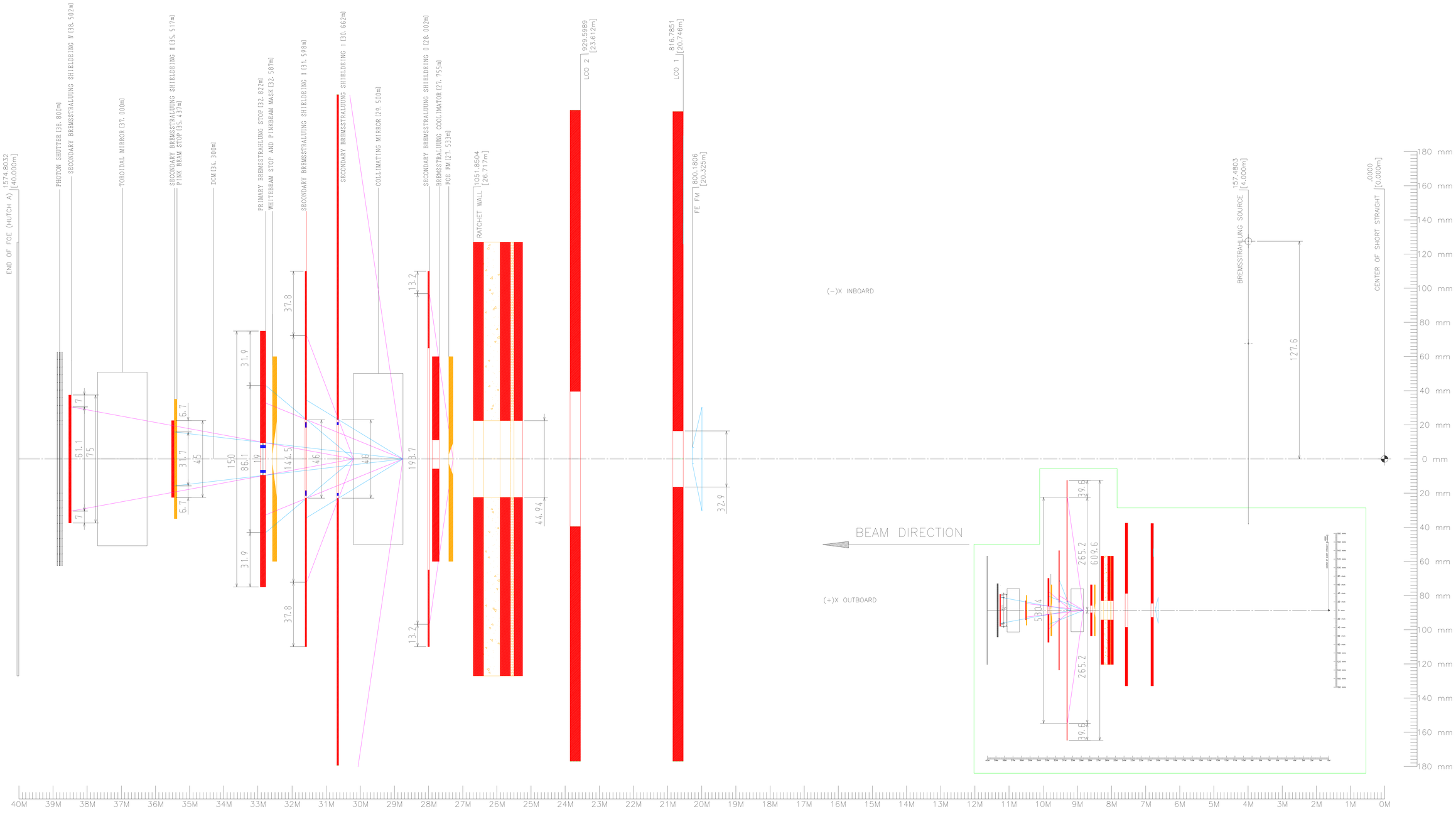

Reference: PD-FXI-RAYT-0001 SHEET3 REV. 2
SR-FE-DW18-1001 SHEET4 REV. B

SCALE X:Z=1:50

NOTES:
1. IN THIS RAYTRACE, THE DOWNSTREAM APERTURE OF THE FOE FM ASSUMES THE UPGRADE SCENARIOSIZE.

REV	MODIFICATION	DATE	MOD/BY	REV	MODIFICATION	DATE	MOD/BY
4	Rearrangement of components as latest layout.	24/Nov/2015	S.Watanabe	2	Rearrangement of components as our layout.	28/Aug/2015	S.Watanabe
3	Rearrangement of components as latest layout.			1	Modification of front-end starting point listed in SR-FE-DW18-1001 rev B.		
	lines are colored.	09/Nov/2015	S.Watanabe		Rearrangement of components as our layout.	28/Aug/2015	S.Watanabe

CHECKED BY | DESIGNED BY | DRAWN BY: Watanabe | 24/Nov/2015

TOYAMA co.,LTD.

UNIT: mm

SCALE

TITLE: FXI RAYTRACING 2NDARY BREMSSTRALUNG HORIZONTAL

DWG No. 1AA-00058 4

A3

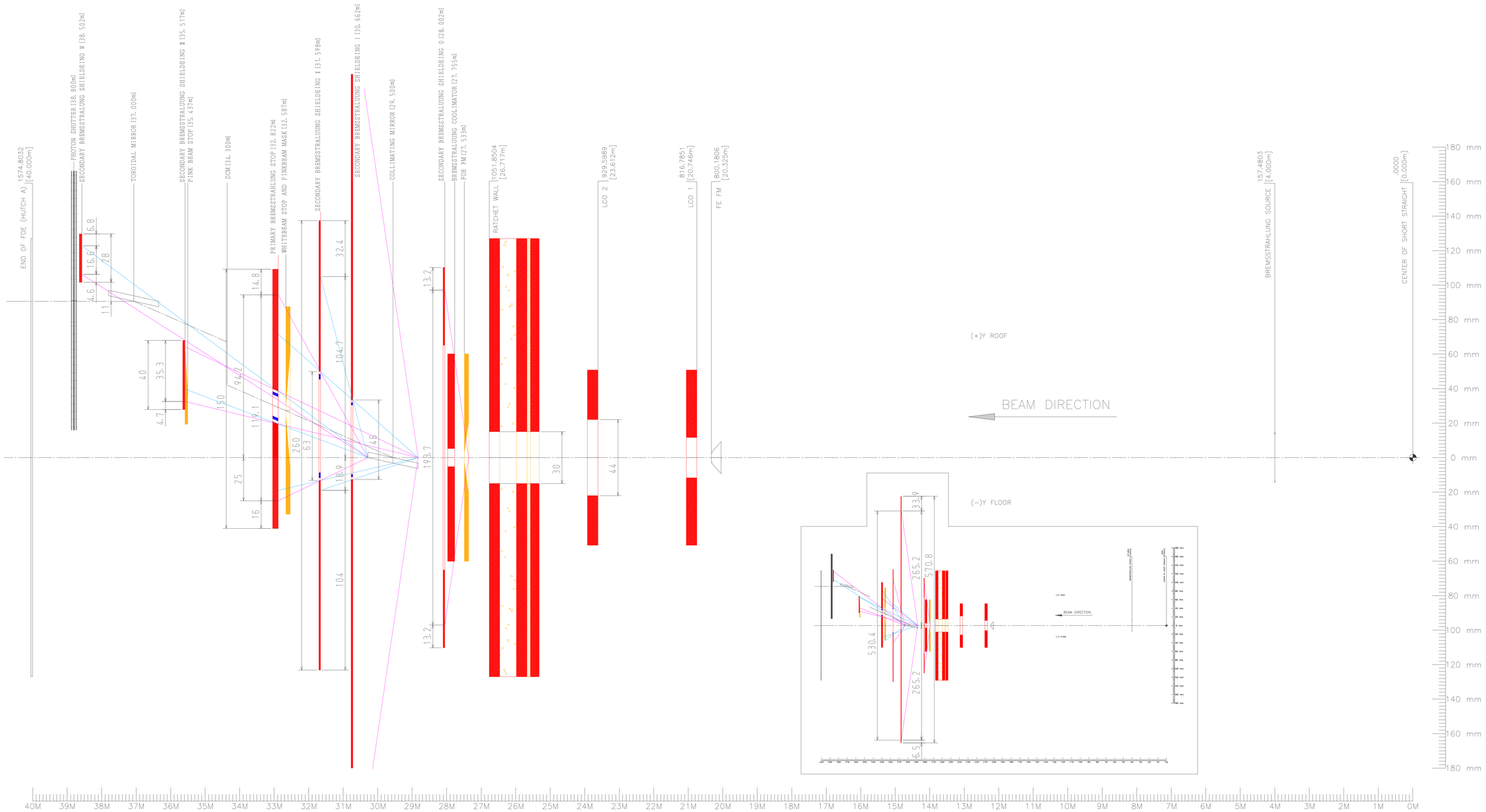

SCALE X:Z=1:50

NOTES:

1. IN THIS RAYTRACE, THE DOWNSTREAM APERTURE OF THE FOE FM ASSUMES THE UPGRADE SCENARIOSIZE.

Reference: PD-FXI-RAYT-0001 SHEET8 REV. 2
SR-FE-DW18-1001 SHEET5 REV. B

REV	MODIFICATION	DATE	MOD/BY
4	Rearrangement of components as latest layout.	26/Nov/2015	S.Watanabe
3	SRS-0 is included, Rearrangement of components as latest layout.	19/Nov/2015	S.Watanabe
2	Rearrangement of components as latest layout.	06/Nov/2015	S.Watanabe
1	Modification of front-end starting point listed in SR-FE-DW18-1001 rev.B.	28/Aug/2015	S.Watanabe
	Rearrangement of components as our layout.		

CHECKED BY
DESIGNED BY
DRAWN BY Watanabe 24/Nov/2015
UNIT: mm
TITLE FXI RAYTRACING 2NDARY BREMSSTRALUNG VERTICAL
SCALE
DWG No. 1AA-00059 4
TOYAMA CO.,LTD.

TABLE OF TOLERANCED DIMENSIONS (mm)

LINE	DESCRIPTION	NOMINAL	±	FABRICATION	±	POSITION	±	CLEARANCE	=	TOTAL
1	FIXED MASK DS APERTURE	5.8	+	0.36	+	0.44		-	=	6.6
2	FIXED MASK US APERTURE	42	+	0.36	+	0.44		-	=	42.8
3	WBST+PBM DS APERTURE	6.8	+	0.36	+	0.44		-	=	7.6
4	WBST+PBM US APERTURE	46	+	0.36	+	0.44		-	=	46.8

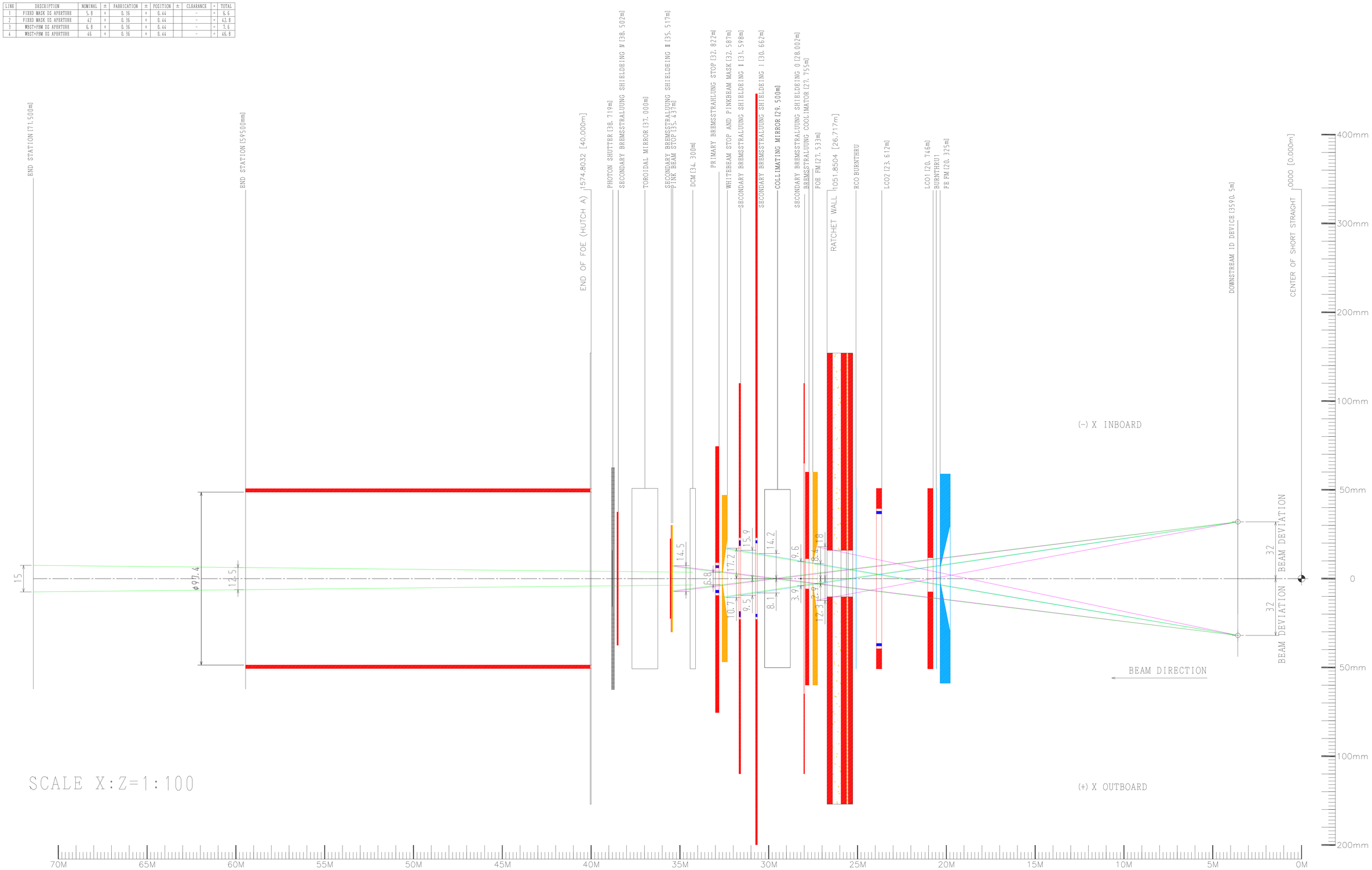

SCALE X:Z=1:100

Reference:PD-FXI-RAYT-0001 SHEET5 REV. 2
SR-FE-DW18-1001 REV. B

NOTES:

1. IN THIS RAYTRACE,THE DOWNSTREAM APERTURE OF THE FOE FM ASSUMES THE UPGRADE SCENARIOSIZE.
2. POSITION TOLERANCE:0.22mm
   MANUFACTURING TOLERANCE:0.18mm

REV	MODIFICATION	DATE	MOD/BY
5	Rearrangement of components as latest layout.	24/Nov/2015	S.Watanabe
4	RCO Burn through is included. SBS-0 is included.		
	Rearrangement of components as latest layout.	19/Nov/2015	S.Watanabe
3	Burn through device, LCO1, LCO2, RCO and Ratchetwall is included.		
	Rearrangement of components as latest layout.		
	Lines are colored. Nominal SR lines are removed.		
	SR lines are extended to the end of the end station.	09/Nov/2015	S.Watanabe
2	Addition of shielding components of Frontend		
	Rearrangement of components as latest layout.	28/Oct/2015	S.Watanabe
1	Modification of front-end starting point using SR-FE-DW18-1001 rev B.		
	Rearrangement of components as our layout.	28/Aug/2015	S.Watanabe

CHECKED BY | DESIGNED BY | DRAWN BY Watanabe 24/Nov/2015 | UNIT:mm | TITLE FXI RAYTRACING SYNCHROTRON WITH MISALIGNMENT HORIZONTAL

TOYAMA CO.,LTD. | SCALE | DWG No. 1AA-00060 | ICAD

TABLE OF TOLERANCED DIMENSIONS (mm)

LINE	DESCRIPTION	NOMINAL	±	FABRICATION	±	POSITION	±	CLEARANCE	=	TOTAL
1	FIXED MASK DS APERTURE	5.8	+	0.36	+	0.44		-	=	6.6
2	FIXED MASK US APERTURE	28	+	0.36	+	0.44		-	=	28.8
3	WBST+PBM DS APERTURE	6.8	+	0.36	+	0.44		-	=	7.6
4	WBST+PBM US APERTURE	68	+	0.36	+	0.44		-	=	68.8

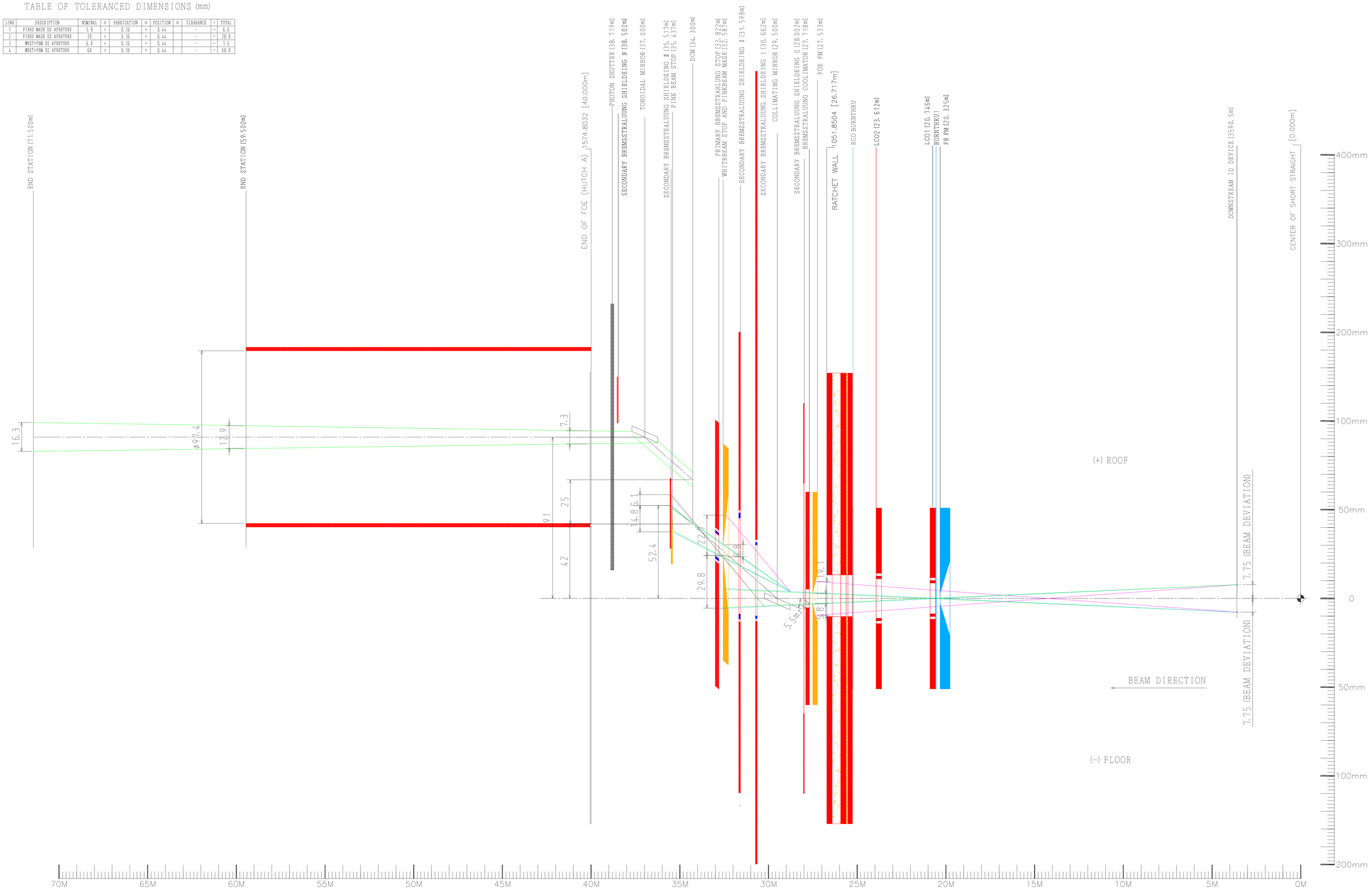

Reference: PD-FXI-RAYT-0001 SHEET1 REV. 2
SR-FE-DW18-1001 SHEET2 REV. B

NOTES:

1. IN THIS RAYTRACE, THE DOWNSTREAM APERTURE OF THE FOE FM ASSUMES THE UPGRADE SCENARIOSIZE.
2. POSITION TOLERANCE: 0.22mm
   MANUFACTURING TOLERANCE: 0.18mm

REV	MODIFICATION	DATE	MOD/BY
5	Rearrangement of components as latest layout.	24/Nov/2015	S.Watanabe
4	RCO Burn through is included. SBS-0 is included.		
	Rearrangement of components as latest layout.	19/Nov/2015	S.Watanabe

REV	MODIFICATION	DATE	MOD/BY
3	Burn through device, LCO1, LCO2, RCO and Ratchetwall is included.		
	Rearrangement of components as latest layout.		
	lines are colored.		
	SR lines are extended to the end of the end station.	09/Nov/2015	S.Watanabe

REV	MODIFICATION	DATE	MOD/BY
2	Addition of shielding components of Frontend and Transport pipe		
	Rearrangement of components as latest layout.	28/Oct/2015	S.Watanabe
1	Modification of front-end starting point using SR-FE-DW18-1001 rev B.		
	Rearrangement of components as latest layout.	28/Aug/2015	S.Watanabe

CHECKED BY	DESIGNED BY	DRAWN BY	UNIT: mm	TITLE
		Watanabe		FXI RAYTRACING SYNCHROTRON WITH MISALIGNMENT VERTICAL
		24/Nov/2015		

TOYAMA CO.,LTD

SCALE

DWG No. 1AA-00061 A

ICAD

TABLE OF TOLERANCED DIMENSIONS (mm)

LINE	DESCRIPTION	NOMINAL	±	FABRICATION	±	POSITION	±	CLEARANCE	=	TOTAL
1	FIXED MASK DS APERTURE	5.8	+	0.36	+	0.44		-	=	6.6
2	FIXED MASK US APERTURE	42	+	0.36	+	0.44		-	=	42.8
3	WBST+PBM DS APERTURE	6.8	+	0.36	+	0.44		-	=	7.6
4	WBST+PBM US APERTURE	46	+	0.36	+	0.44		-	=	46.8

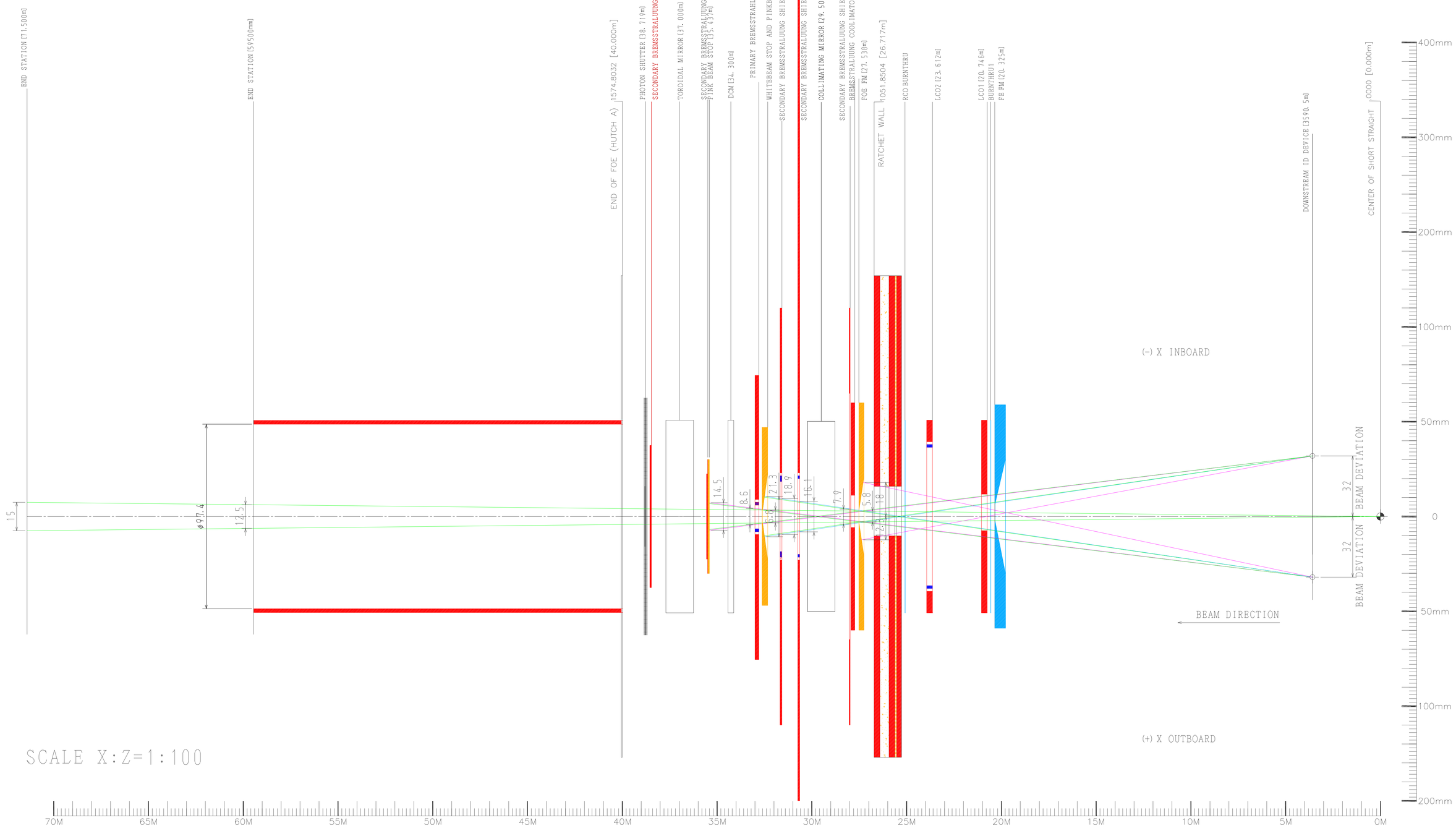

SCALE X:Z=1:100

Reference: PD-FXI-RAYT-0001 SHEET1 REV. 2
SR-FE-DW18-1001 SHEET2 REV. B

NOTES:

1. IN THIS RAYTRACE, THE DOWNSTREAM APERTURE OF THE FOE FM IS CURRENT DESIGN.
2. POSITION TOLERANCE: 0.22mm
   MANUFACTURING TOLERANCE: 0.18mm

REV	MODIFICATION	DATE	MOD/BY
2	Rearrangement of components as latest layout.	24/Nov/2015	S.Watanabe
1	Lines are maximum synchrotron radiation. (Not nominal condition)		
	RCO Burn through is included. SBS-0 is included.		
	Rearrangement of components as latest layout.	19/Nov/2015	S.Watanabe

CHECKED BY | DESIGNED BY | DRAWN BY: Watanabe 24/Nov/2015

TOYAMA co.,ltd

UNIT: mm | SCALE

TITLE: FXI RAYTRACING
MAXIMUM SYNCHROTRON
HORIZONTAL CURRENT DESIGN

DWG No. 1AA-00062 △2 | ICD

MASKS

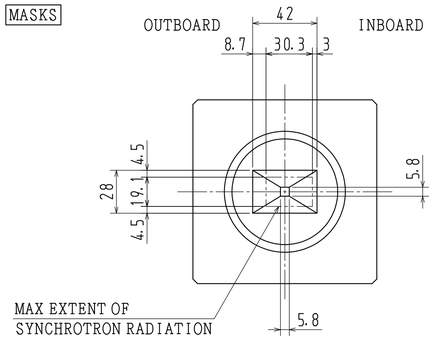

FM
GLIDCOP

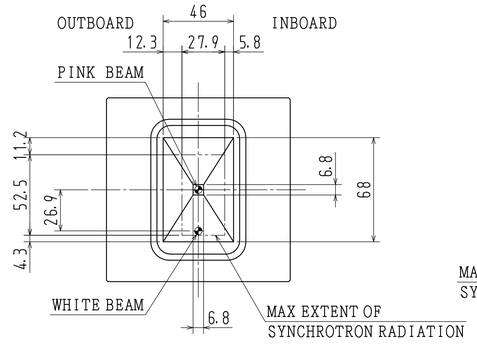

WBST&PBM
GLIDCOP

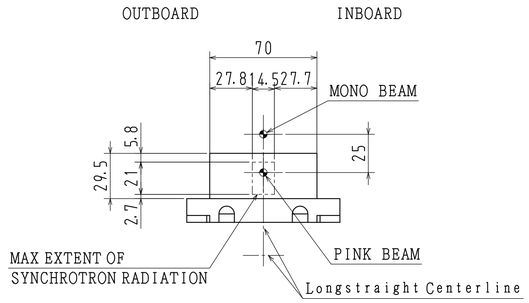

PBST
GLIDCOP

COLLIMATORS

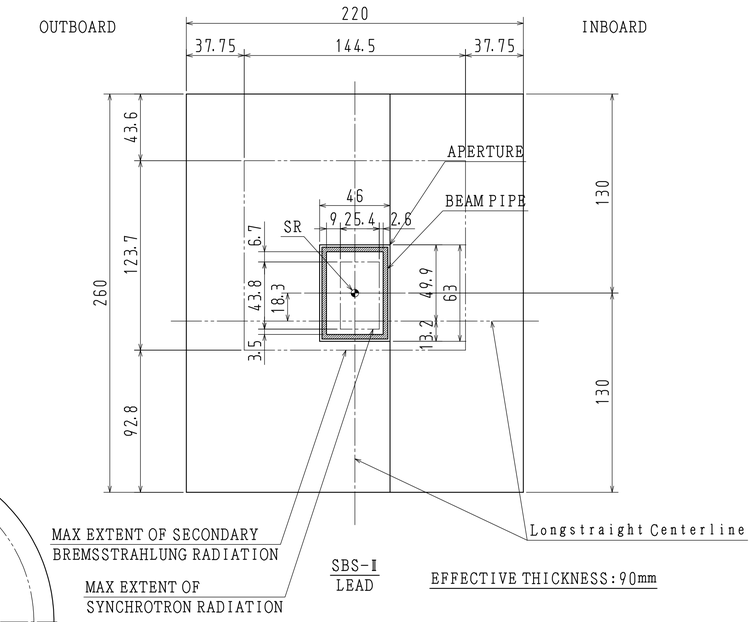

SBS-Ⅱ
LEAD

EFFECTIVE THICKNESS:90mm

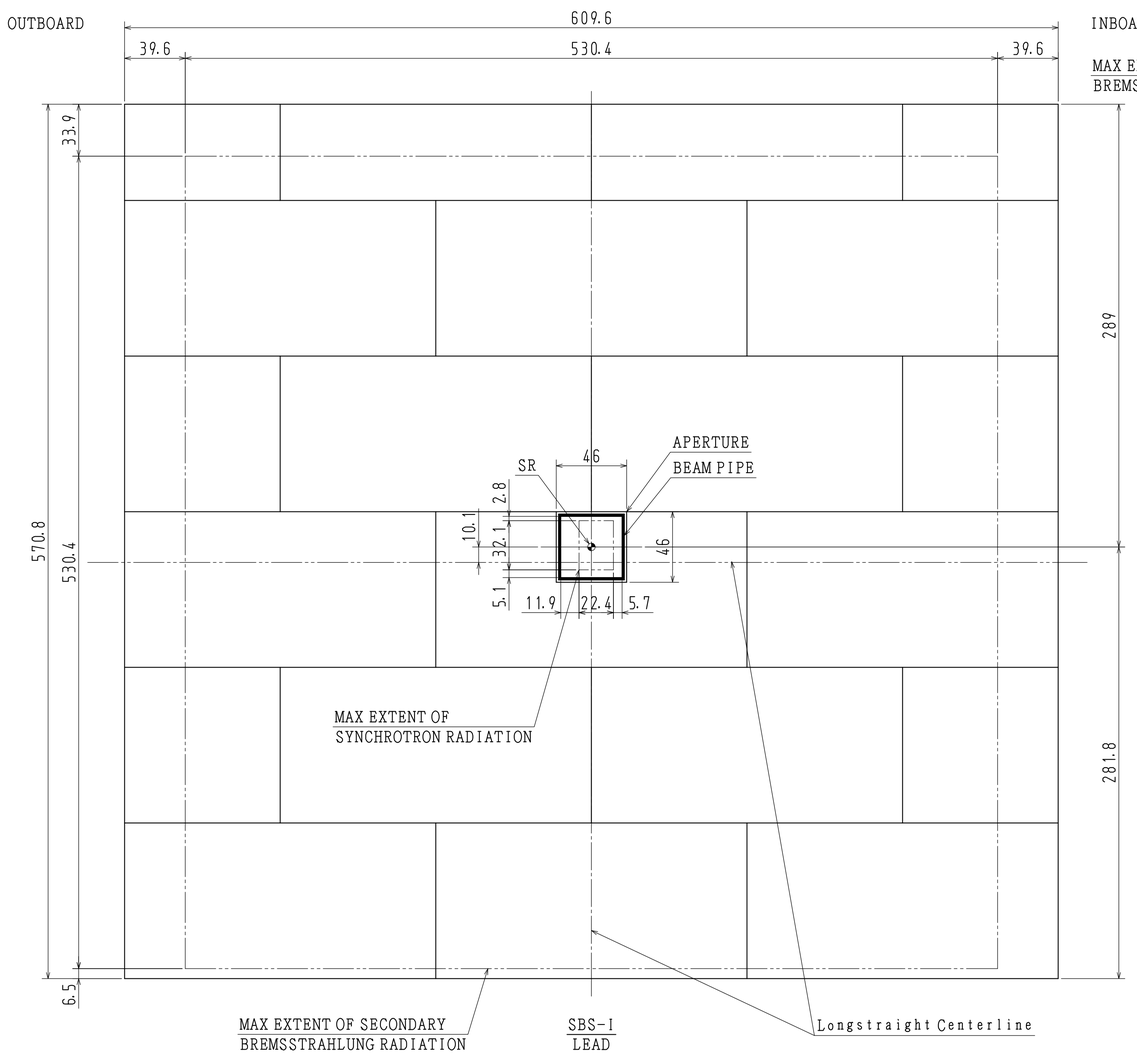

SBS-Ⅰ
LEAD

EFFECTIVE THICKNESS:101.6mm

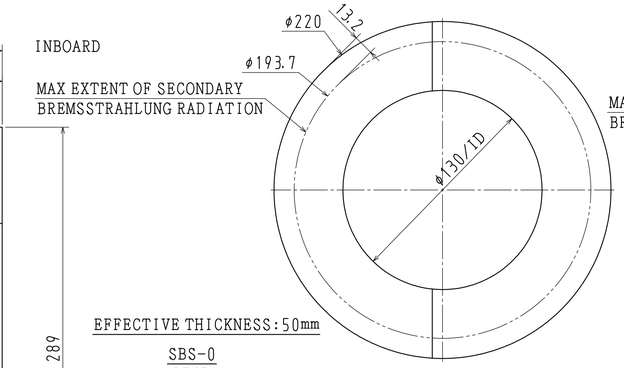

EFFECTIVE THICKNESS:50mm

SBS-0
LEAD

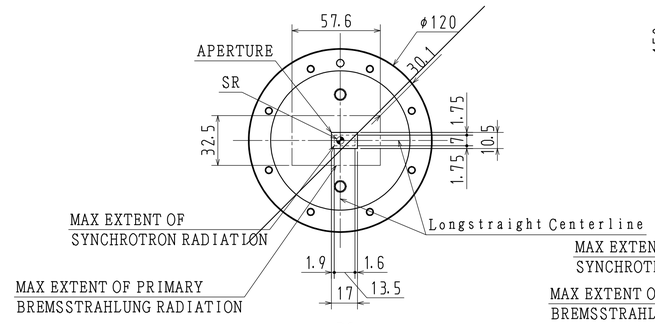

BC
TUNGSTEN

EFFECTIVE THICKNESS:215.6mm

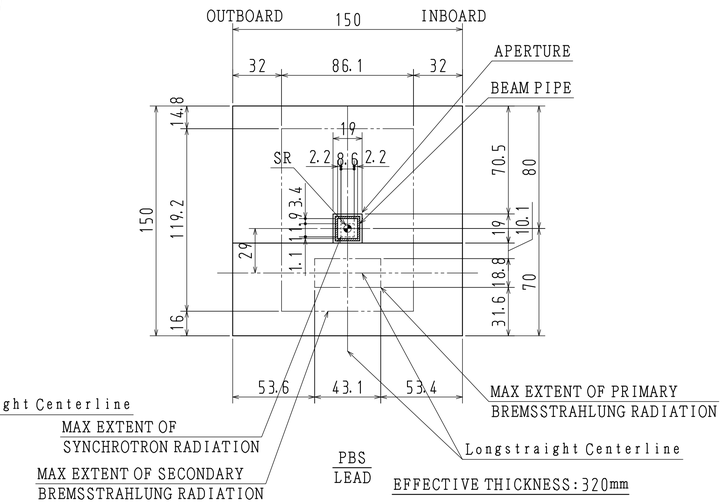

PBS
LEAD

EFFECTIVE THICKNESS:320mm

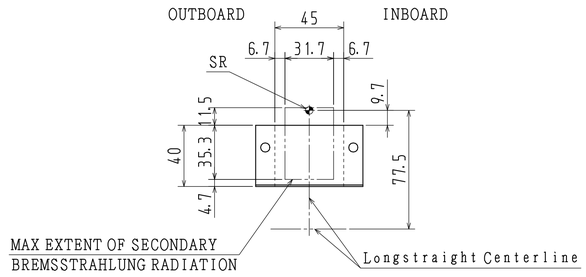

SBS-Ⅲ
TUNGSTEN

EFFECTIVE THICKNESS:65mm

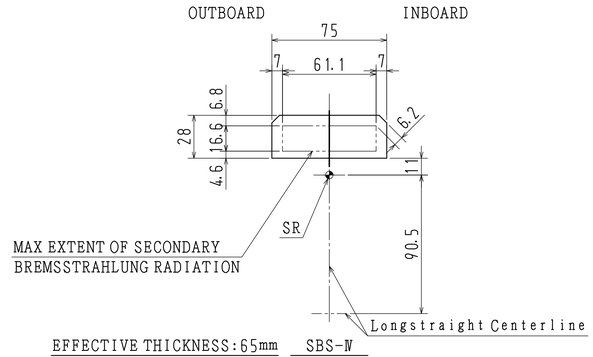

EFFECTIVE THICKNESS:65mm

SBS-Ⅳ
TUNGSTEN

NOTES:
1. THESE ARE VIEW FROM UPSTREAM LOOKING DOWNSTREAM.
2. MAX EXTENT OF SYNCHROTRON RADIATION INCLUDES
   MISSARRAIGNMENT OF COLLIMATING MIRROR AND TROIDAL MIRROR.
3. THE DOWNSTREAM APERTURE OF THE FOE FM ASSUMES THE UPGRADE SCENARIO SIZE.
4. FOR SYNCHROTRON RAY; POSITION TOLERANCE: 0.22mm
   MANUFACTURING TOLERANCE: 0.18mm

REV	MODIFICATION	DATE	MOD/BY
1	Rearrangement of components as our layout.	24/Nov/2015	S.Watanabe

CHECKED BY	DESIGNED BY	DRAWN BY	UNIT: mm	TITLE
Mochizuki		Watanabe		FXI RAYTRACING Masks and Collimators Detail
24/Nov/2015		24/Nov/2015		

TOYAMA co.,ltd

SCALE 1:2

DWG No. 1AA-00064 △1

ICD

1

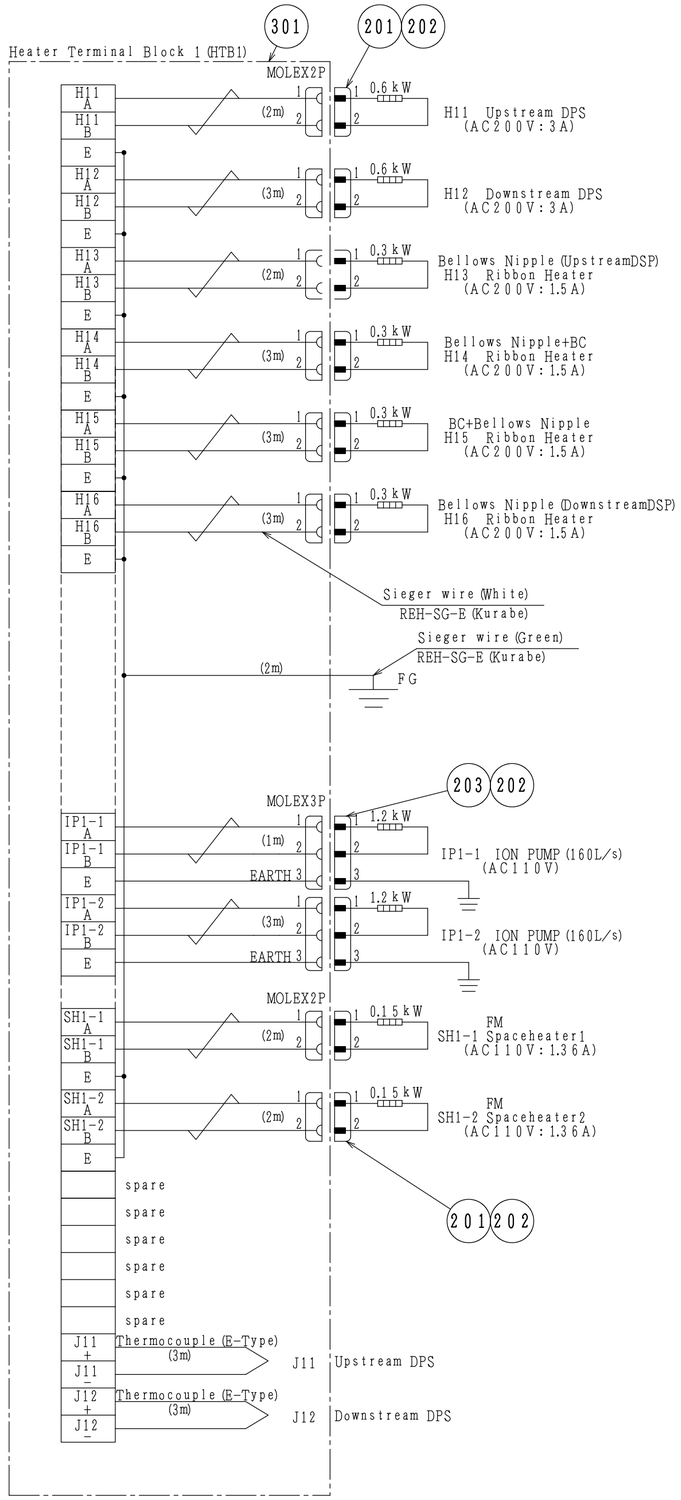

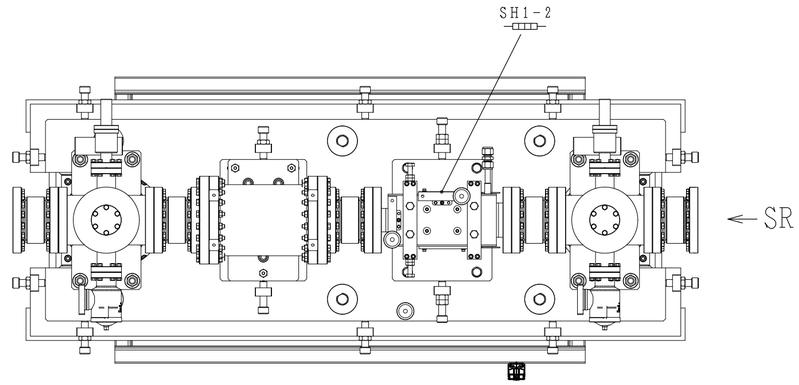

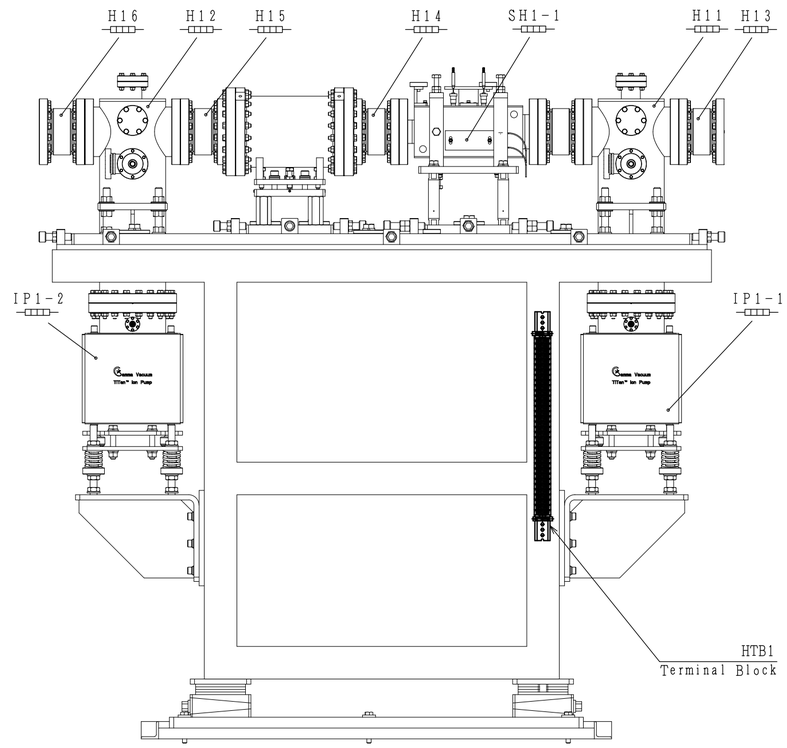

Reference drawing
(Position of the heater)
(S=1/10)

1	301			Heater Terminal Block 1 (HTB1)				
2	203			Molex (3P·female)	1396P	MOLEX		
22	202			MOLEX PIN (male)	1190TL	MOLEX		
8	201			Molex (2P·male)	3191-02R1	MOLEX		
4	101			Ribbon Heater	C3025202 AC200V300W			L=2000
0	1			Assembly				
Z Y X W V U T S R Q P O N M L K J I H G F E D C B A	No.	Symbol	DWG No.	Item	Parts number	Manufac.	Remarks	

REV	MODIFICATION	DATE	MOD/BY
4			
3			
2			
1			

CHECKED BY	DESIGNED BY	DRAWN BY	RELEASED BY	TITLE
OKA	Yoshida	Yoshida		Heater Wiring Diagram1 (FXI DPS1, FM, BC, DPS2)
19/Nov./2015	16/Nov./2015	16/Nov./2015		

TOYAMA CO.,LTD

SH No. 1/8

DWG No. 2AP-00866 △1

PCS

1

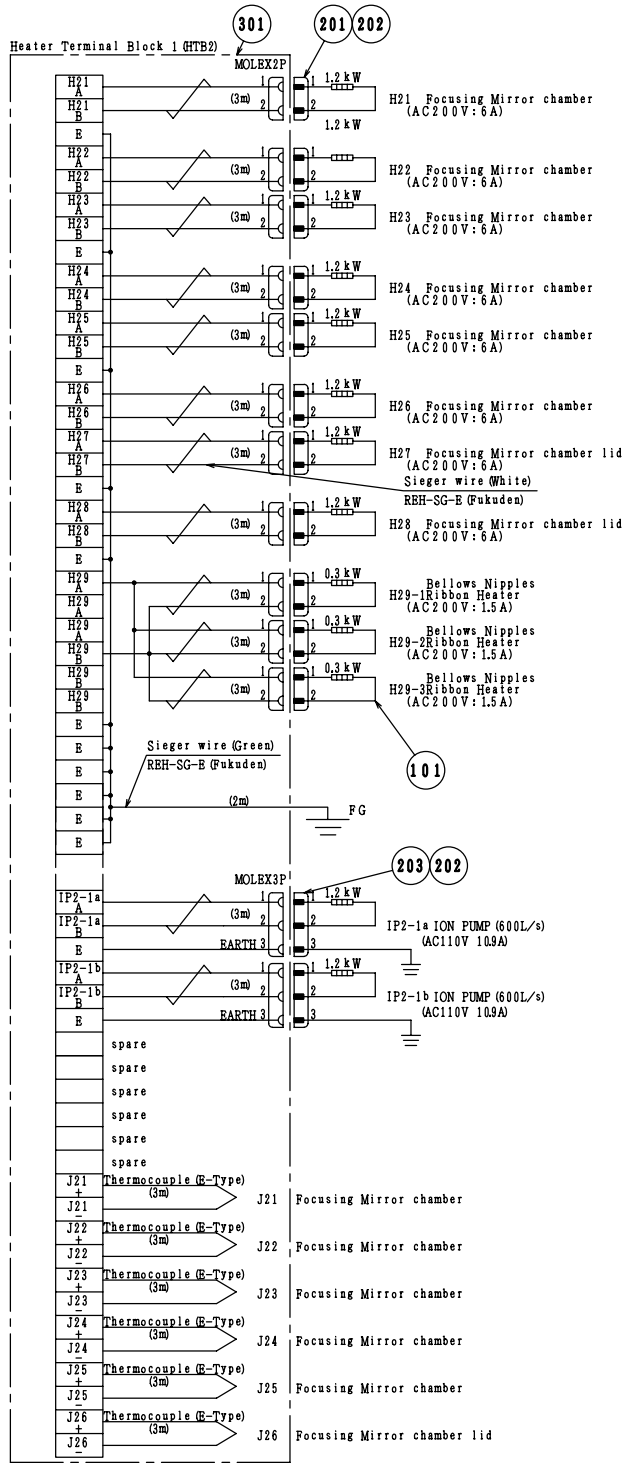

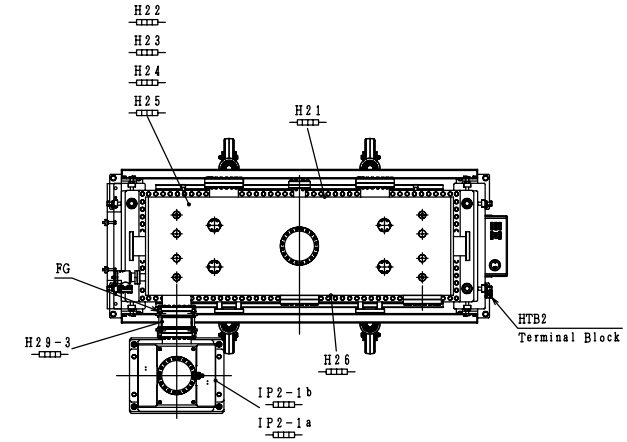

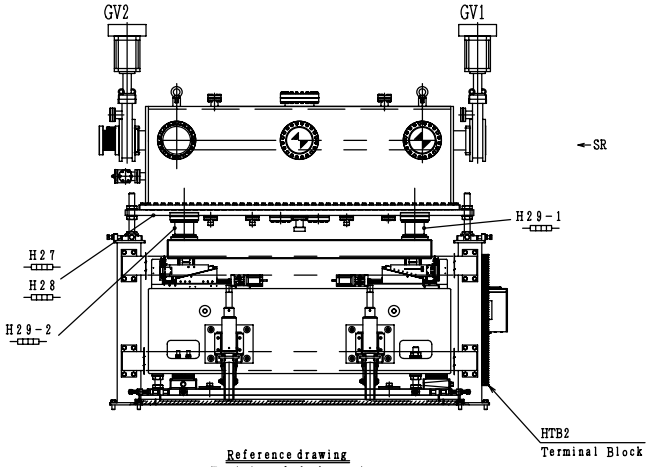

Reference drawing
(Position of the heater)
(S=1/20)

No.	Symbol	DWG No.	Item	Parts number	Manufac.	Remarks
1	301		Heater Terminal Block 1 (HTB2)			
2	203		Molex (3P・female)	1396P	MOLEX	
28	202		MOLEX PIN (male)	1190TL	MOLEX	
11	201		Molex (2P・male)	3191-02R1	MOLEX	
3	101	Z3702024	Ribbon Heater Assembly	C3025202 AC200V300W		L=2000

REV	MODIFICATION	DATE	MOD/BY
4			
3			
2			
1			

CHECKED BY	DESIGNED BY	DRAWN BY	RELEASED BY
OKA	Maezeki	Maezeki	
19/Nov/2015	17/Nov/2015	17/Nov/2015	

TOYAMA co.,Ltd

TITLE: Heater Wiring Diagram2 (FXI CM)

SH No. 2/8

DWG No. 2AP-00867 1 PCS

1

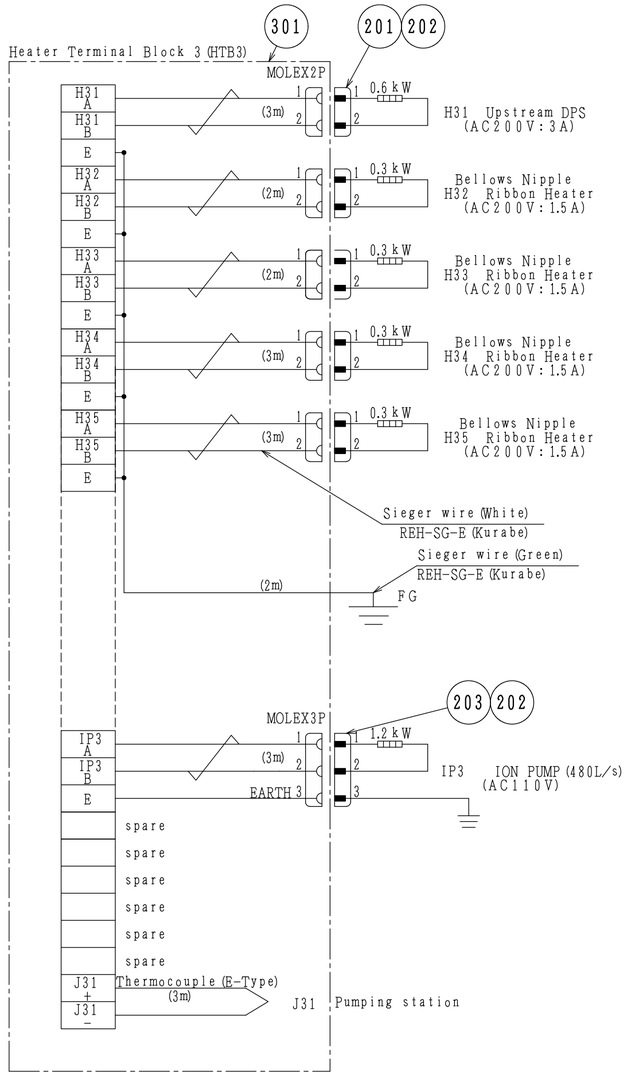

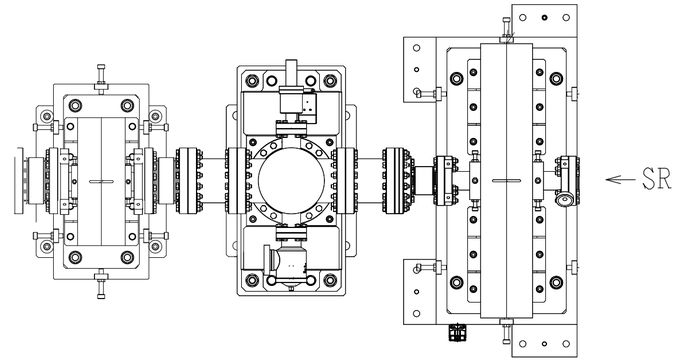

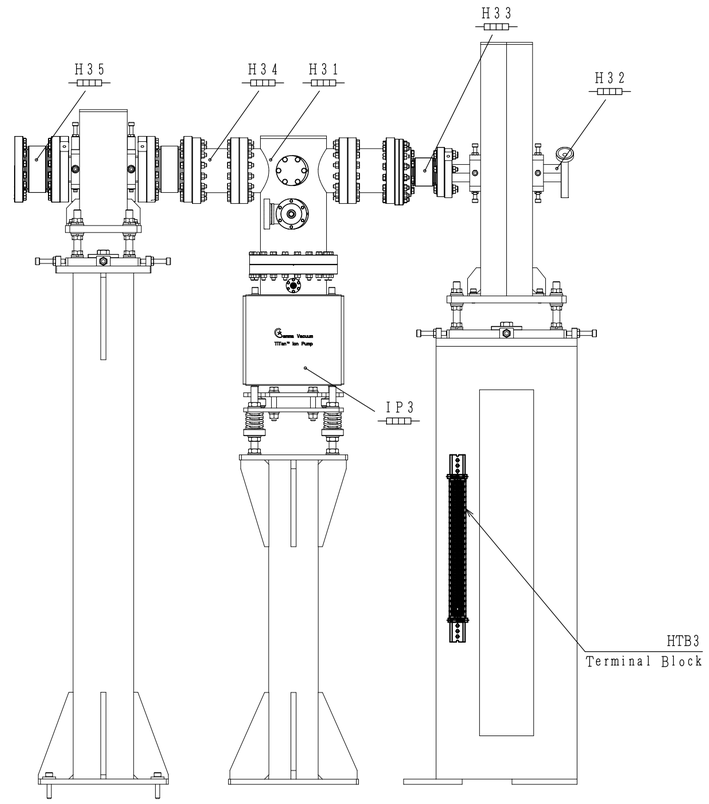

Reference drawing
(Position of the heater)
(S=1/10)

No.	Symbol	DWG No.	Item	Parts number	Manufac.	Remarks
1	301		Heater Terminal Block2 (HTB2)			
1	203		Molex (3P·female)	1396P	MOLEX	
13	202		MOLEX PIN (male)	1190TL	MOLEX	
5	201		Molex (2P·male)	3191-02R1	MOLEX	
4	101		Ribbon Heater	C3025202 AC200V300W		L=2000
0	1		Assembly			

REV	MODIFICATION	DATE	MOD/BY
4			
3			
2			
1			

CHECKED BY	DESIGNED BY	DRAWN BY	RELEASED BY
OKA	Yoshida	Yoshida	
19/Nov./2015	16/Nov./2015	16/Nov./2015	

TOYAMA CO.,LTD

SH No. 3/8

TITLE: Heater Wiring Diagram3 (Transport pipe, Pumping station)

DWG No. 2AP-00868 1 PCS

1

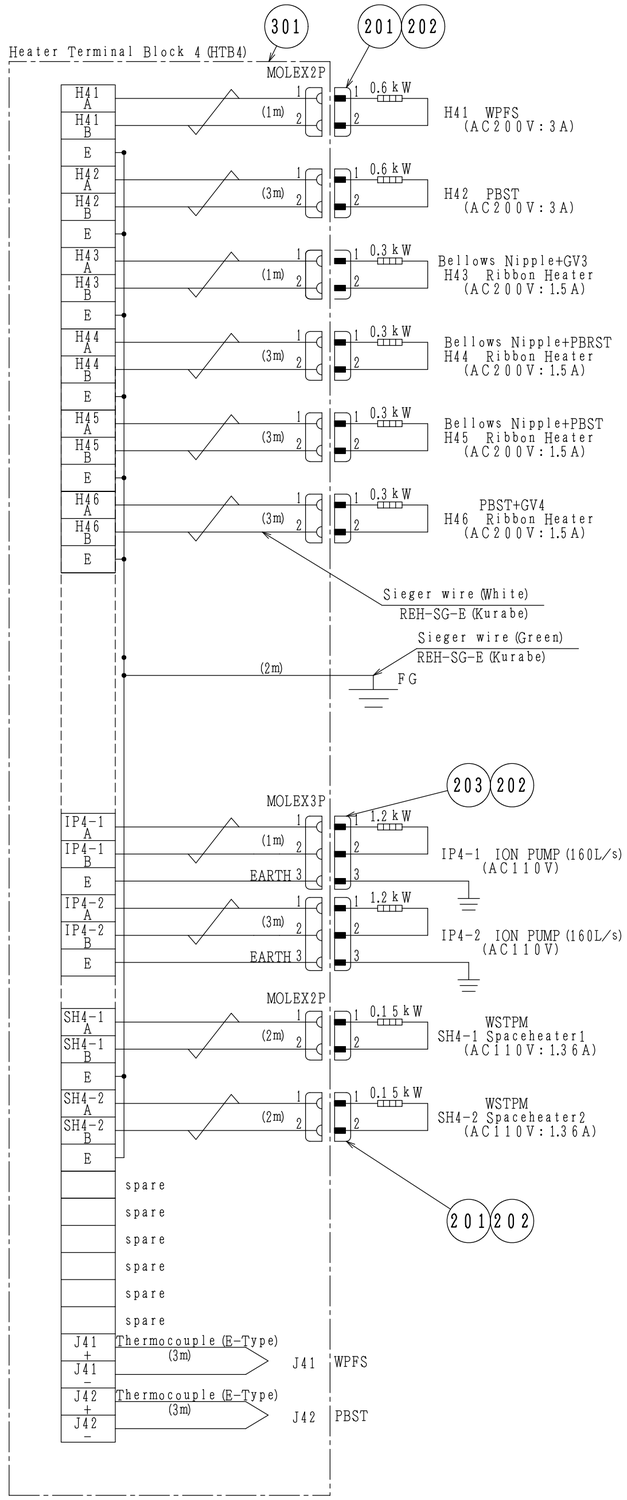

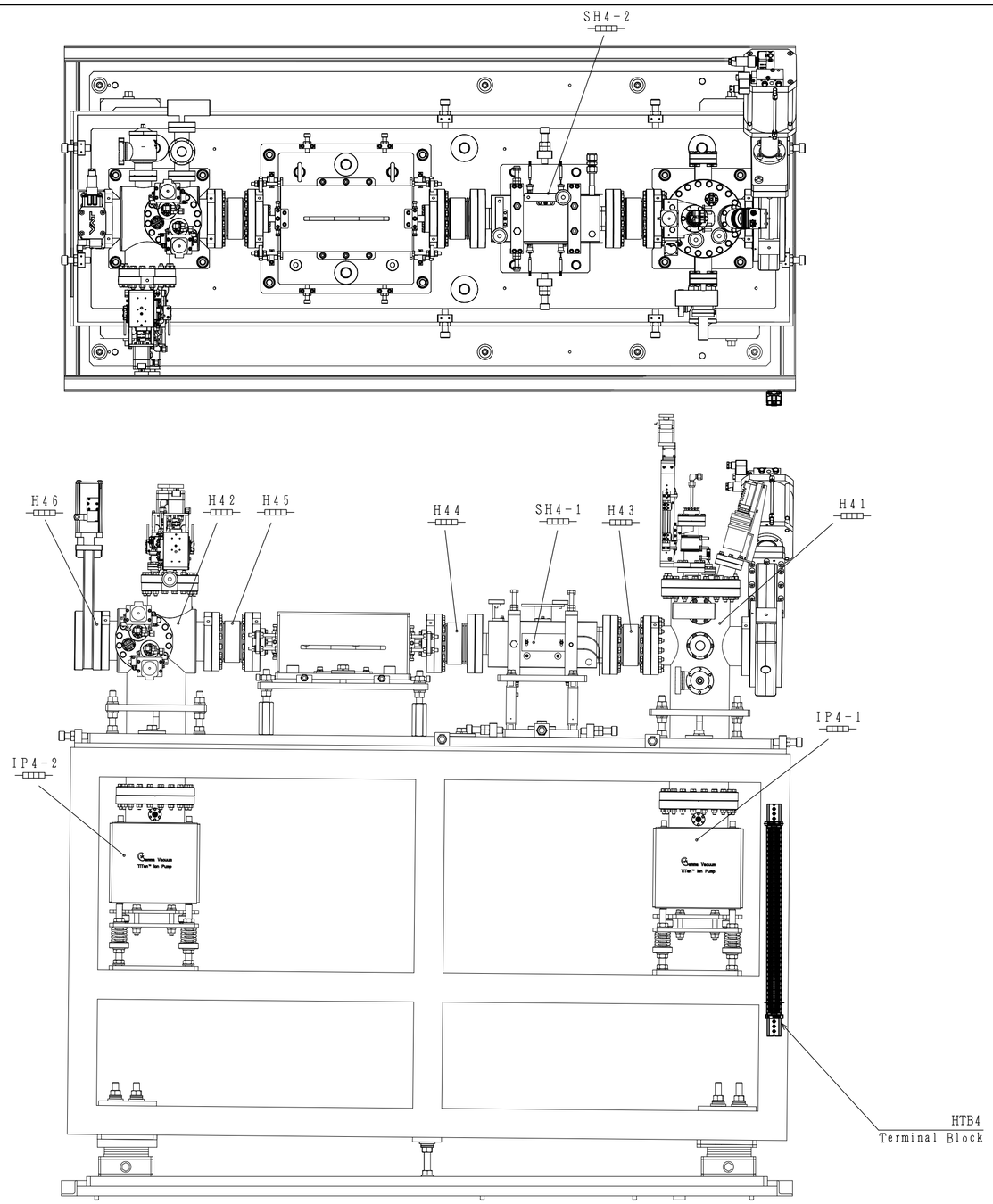

Reference drawing
(Position of the heater)
(S=1/10)

Z	Y	X	W	V	U	T	S	R	Q	P	O	N	M	L	K	J	I	H	G	F	E	D	C	B	A	No.	Symbol	DWG No.	Item	Parts number	Manufac.	Remarks
																										1	301		Heater Terminal Block4 (HTB4)			
																										2	203		Molex (3P・female)	1396P	MOLEX	
																										22	202		MOLEX PIN (male)	1190TL	MOLEX	
																										8	201		Molex (2P・male)	3191-02R1	MOLEX	
																										3	101		Ribbon Heater	C3025202 AC200V300W		L=2000
																										0	1		Assembly			

REV	MODIFICATION	DATE	MOD/BY
4			
3			
2			
1			

CHECKED BY	DESIGNED BY	DRAWN BY	RELEASED BY
OKA	Yoshida	Yoshida	
19/Nov./2015	16/Nov./2015	16/Nov./2015	

TOYAMA CO.,LTD

TITLE: Heater Wiring Diagram4 (WPFS, WSTPM, PBRST, PBST)

SH No. 4/8

DWG No. 2AP-00869 0 PCS

1

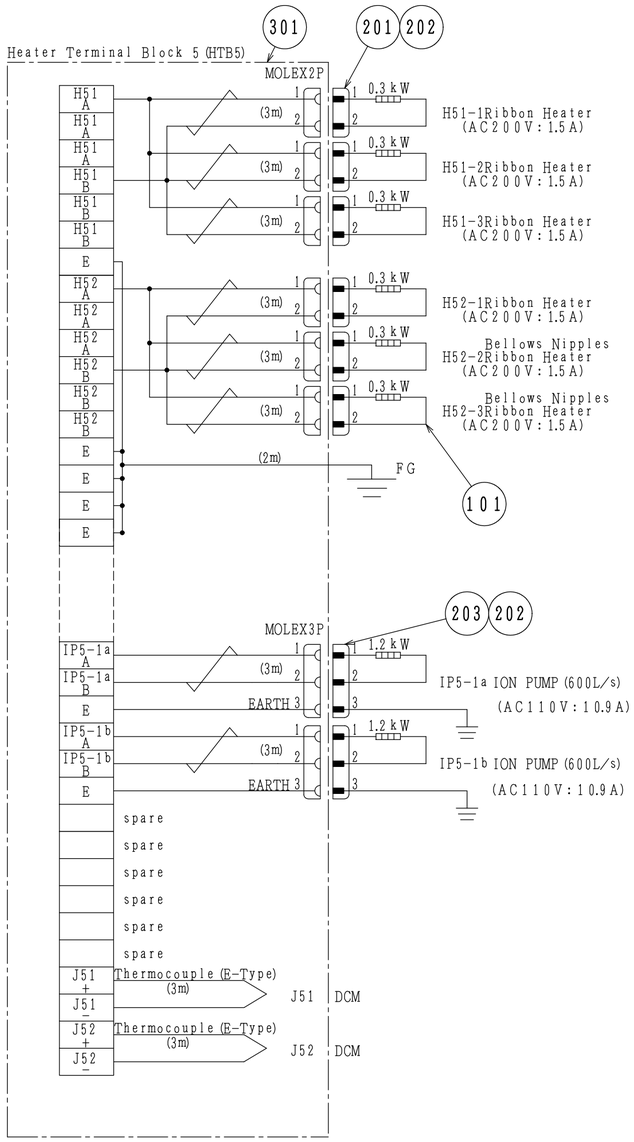

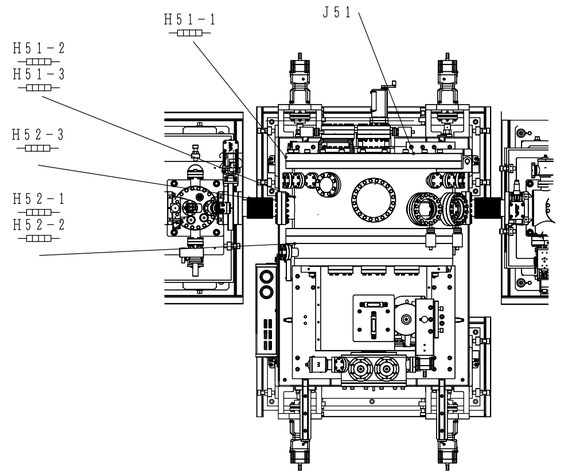

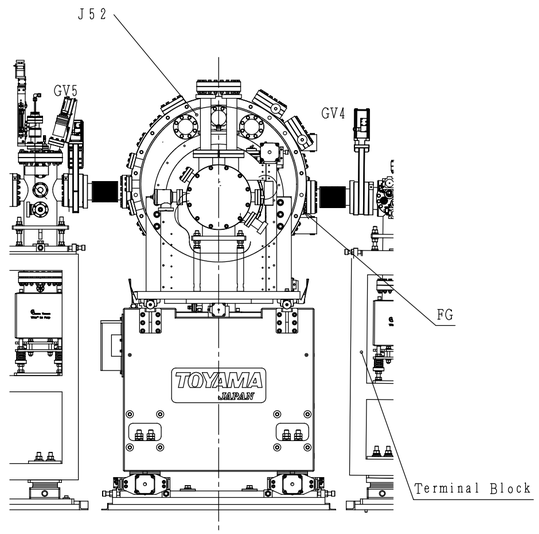

Reference drawing
(Position of the heater)
(S=1/20)

No.	Symbol	DWG No.	Item	Parts number	Manufac.	Remarks
1	301		Heater Terminal Block 5 (HTB5)			
2	203		Molex (3P・female)	1396P	MOLEX	
18	202		MOLEX PIN (male)	1190TL	MOLEX	
6	201		Molex (2P・male)	3191-02R1	MOLEX	
6	101	Z3702024	Ribbon Heater	C3025202 AC200V300W		L=2000
0	1		Assembly			

Z Y X W V U T S R Q P O N M L K J I H G F E D C B A

REV	MODIFICATION	DATE	MOD/BY
4			
3			
2			
1			

CHECKED BY	DESIGNED BY	DRAWN BY	RELEASED BY
OKA	DSUZUKI	DSUZUKI	
19/Nov/2015	19/Nov/2015	19/Nov/2015	

TOYAMA CO.,LTD

TITLE: Heater Wiring Diagram5 (FXI DCM)

SH No. 5/8

DWG No. 2AP-00870 0

PCS

1

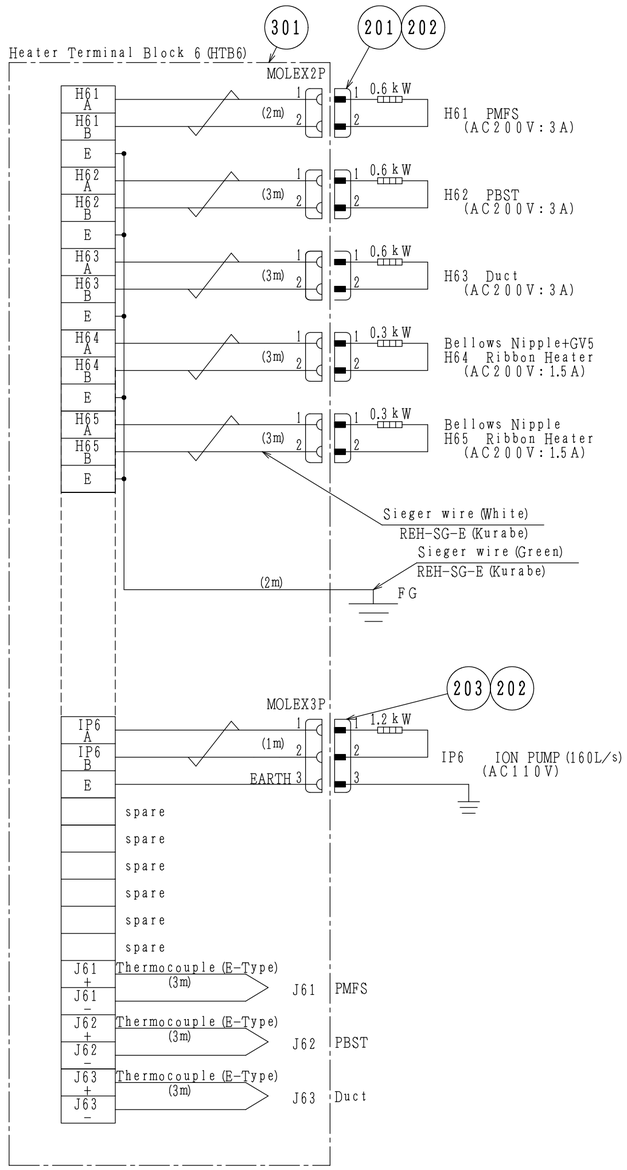

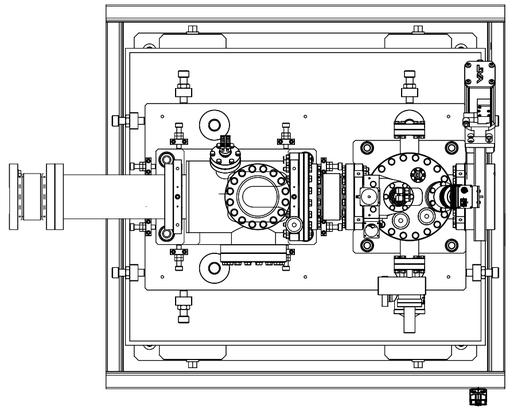

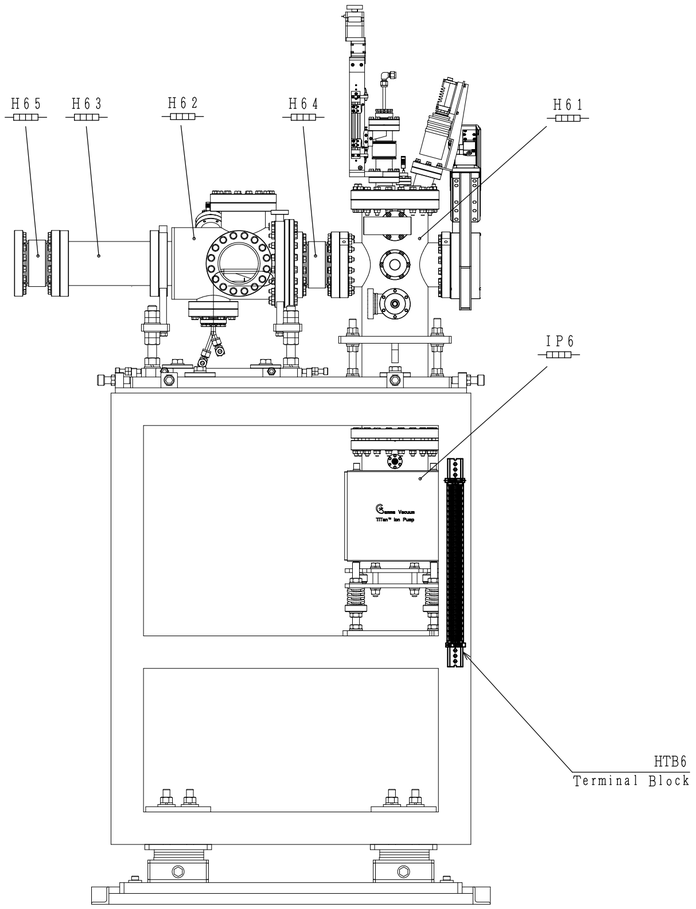

Reference drawing
(Position of the heater)
(S=1/10)

No.	Symbol	DWG No.	Item	Parts number	Manufac.	Remarks
1	301		Heater Terminal Block 6 (HTB6)			
1	203		Molex (3P・female)	1396P	MOLEX	
13	202		MOLEX PIN (male)	1190TL	MOLEX	
5	201		Molex (2P・male)	3191-02R1	MOLEX	
2	101		Ribbon Heater	C3025202 AC200V300W		L=2000
0	1		Assembly			

REV	MODIFICATION	DATE	MOD/BY
4			
3			
2			
1			

CHECKED BY	DESIGNED BY	DRAWN BY	RELEASED BY
OKA	Yoshida	Yoshida	
19/Nov./2015	16/Nov./2015	16/Nov./2015	

TOYAMA CO.,LTD

TITLE: Heater Wiring Diagram6 (PMFS, PBST)

SH No. 6/8

DWG No. 2AP-00871 0

PCS

1

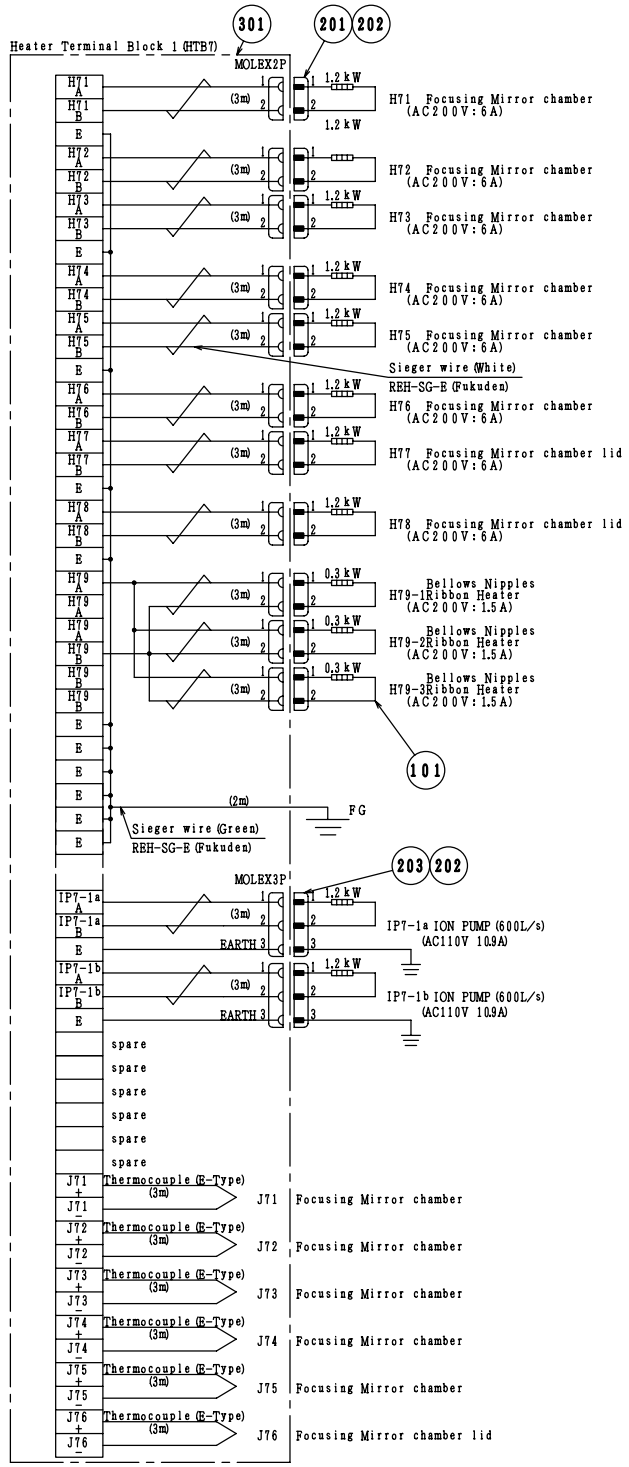

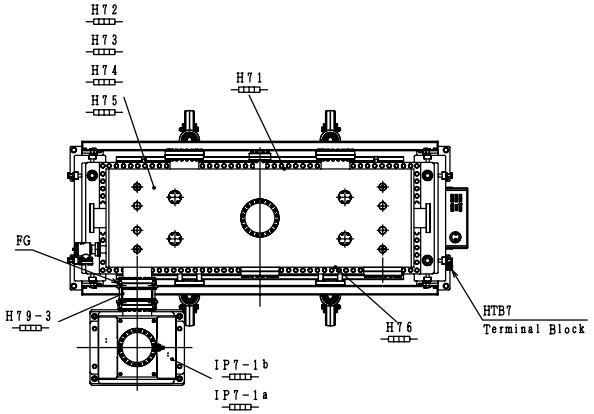

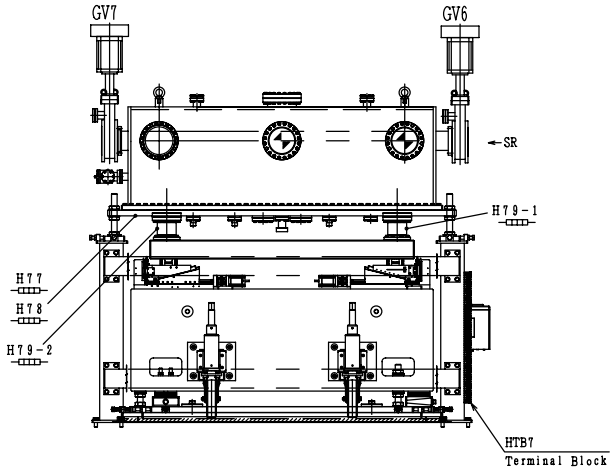

Reference drawing
(Position of the heater)
(S=1/20)

Z	Y	X	W	V	U	T	S	R	Q	P	O	N	M	L	K	J	I	H	G	F	E	D	C	B	A	No.	Symbol	DWG No.	Item	Parts number	Manufac.	Remarks
																										1	301		Heater Terminal Block 1 (HTB7)			
																										2	203		Molex (3P・female)	1396P	MOLEX	
																										28	202		MOLEX PIN (male)	1190TL	MOLEX	
																										11	201		Molex (2P・male)	3191-02R1	MOLEX	
																										3	101	Z3702024	Ribbon Heater	C3025202 AC200V300W		L=2000
																										0	1		Assembly			

REV	MODIFICATION	DATE	MOD/BY
4			
3			
2			
1			

CHECKED BY	DESIGNED BY	DRAWN BY	RELEASED BY
OKA	Maezeki	Maezeki	
19/Nov/2015	18/Nov/2015	18/Nov/2015	

TOYAMA co.,Ltd

TITLE: Heater Wiring Diagram7 (FXI TM)

SH No. 7/8

DWG No. 2AP-00872 1 PCS

1

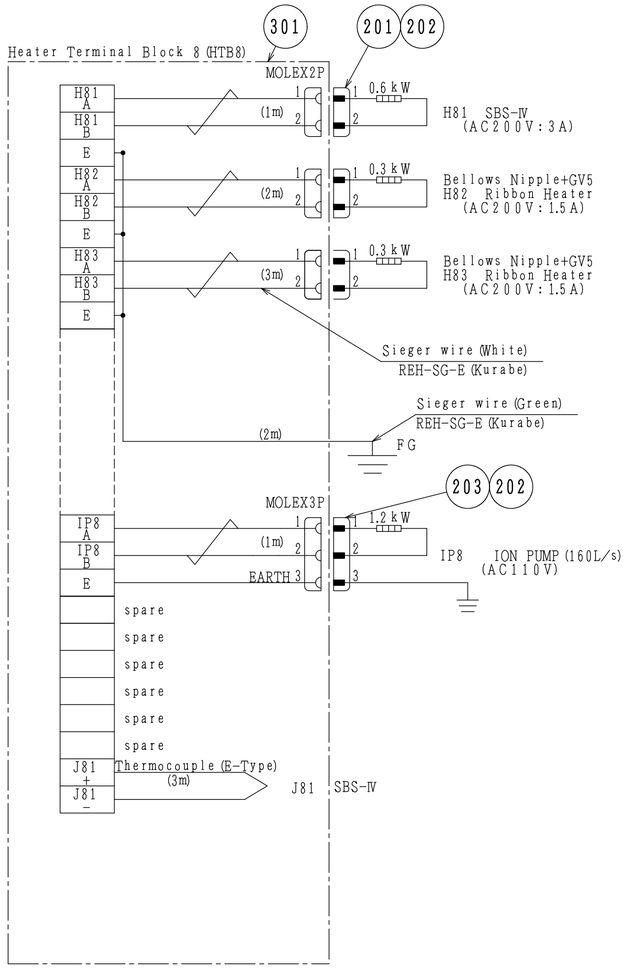

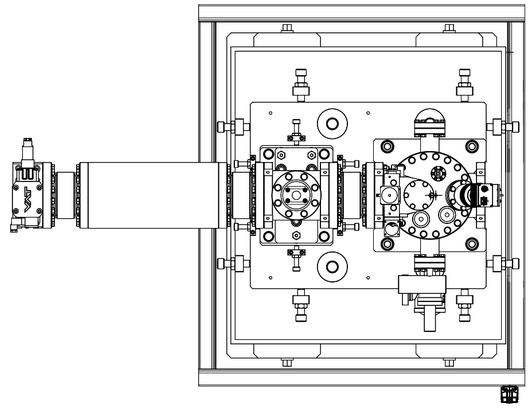

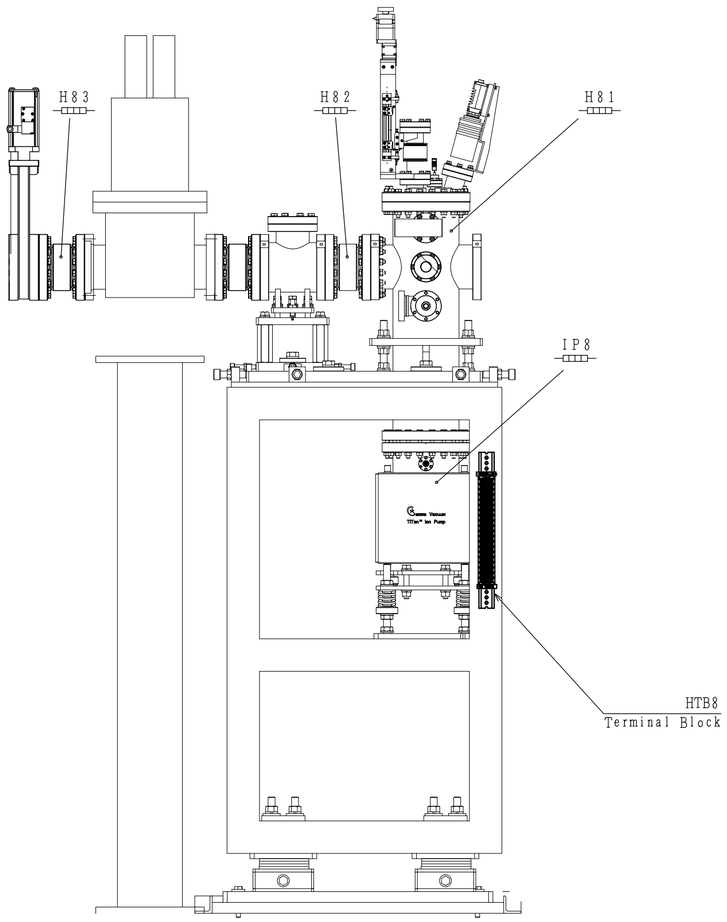

No.	Symbol	DWG No.	Item	Parts number	Manufac.	Remarks
1	301		Heater Terminal Block8 (HTB8)			
1	203		Molex (3P・female)	1396P	MOLEX	
9	202		MOLEX PIN (male)	1190TL	MOLEX	
3	201		Molex (2P・male)	3191-02R1	MOLEX	
2	101		Ribbon Heater	C3025202 AC200V300W		L=2000
0	1		Assembly			

Z Y X W V U T S R Q P O N M L K J I H G F E D C B A

REV	MODIFICATION	DATE	MOD/BY
4			
3			
2			
1			

CHECKED BY	DESIGNED BY	DRAWN BY	RELEASED BY
OKA	Yoshida	Yoshida	
19/Nov./2015	16/Nov./2015	16/Nov./2015	

TOYAMA CO.,LTD

SH No. 8/8

TITLE: Heater Wiring Diagram8 (SBS-IV)

DWG No. 2AP-00873 0

PCS

1

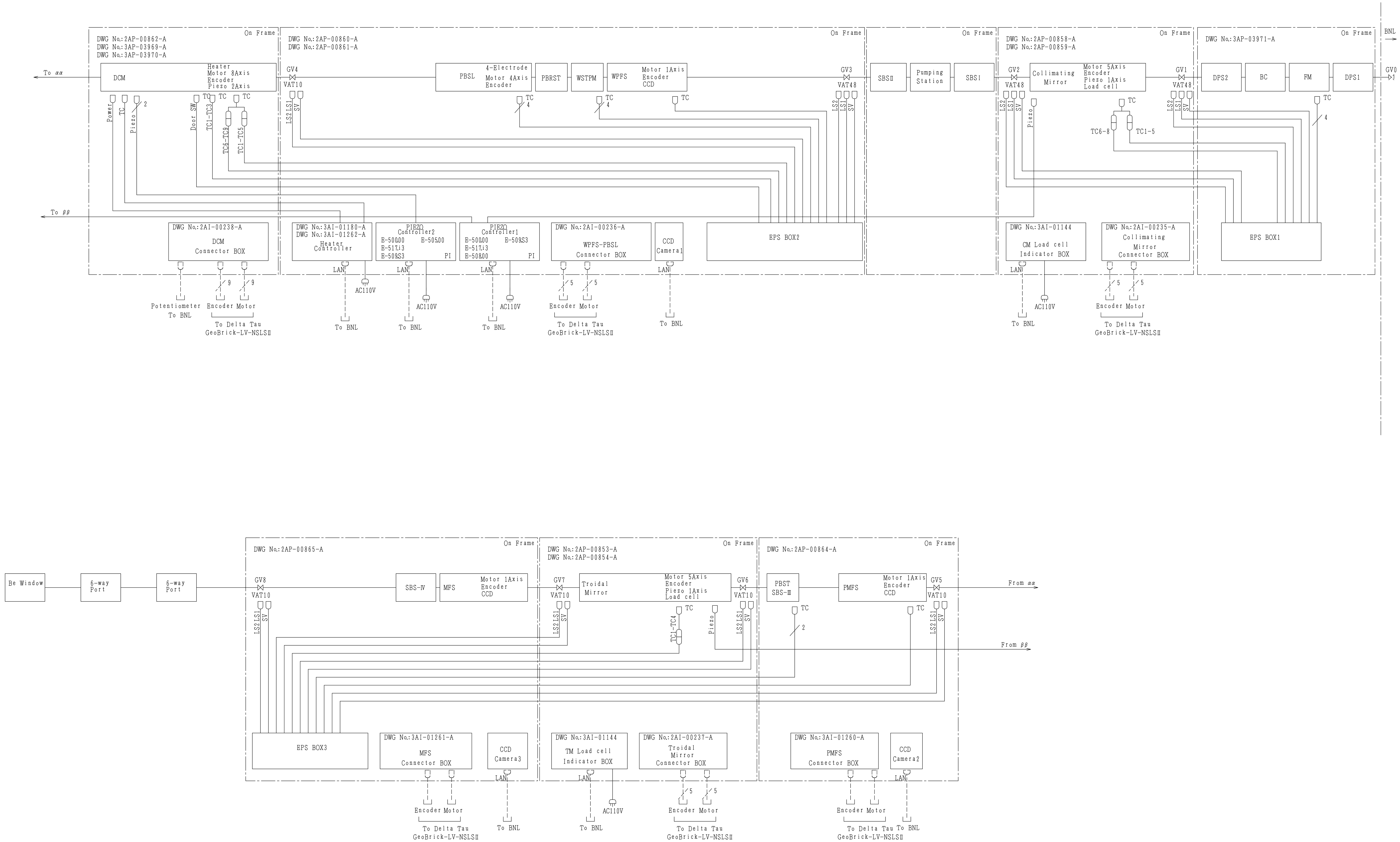

REV	MODIFICATION	DATE	MOD/BY
4			
3			
2			
1			

CHECKED BY	DESIGNED BY	DRAWN BY	RELEASED BY	TITLE
OKA	D.Suzuki	D.Suzuki		FXI Cable Connection diagram1
16/Nov./2015	16/Nov./2015	16/Nov./2015		

TOYAMA CO.,LTD

SH No. 1/1

DWG No. 1AP-00030 0

Symbol | DWG No. | Assembly Item | Parts number | Manufac. | Remarks | PCS

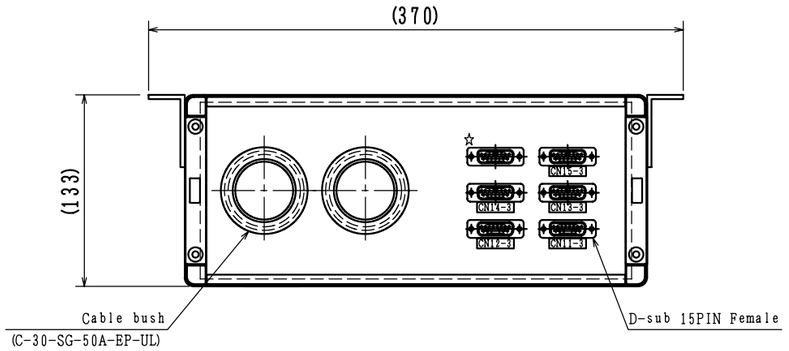

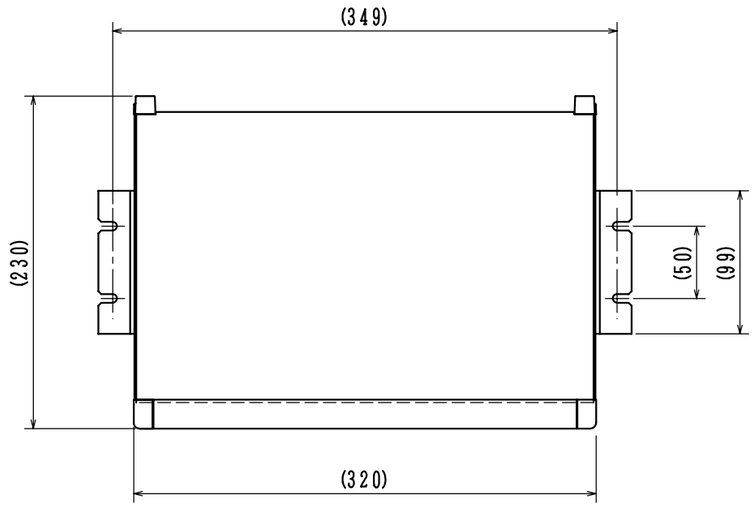

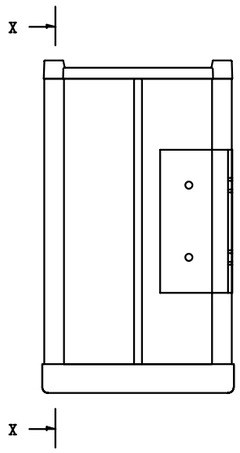

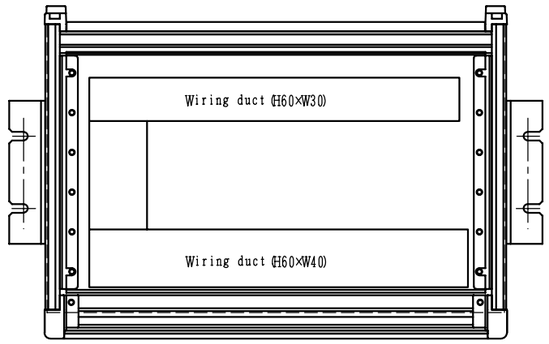

X-X Section

CASE:MO133-32-23G (TAKACHI)

The character notation of a panel is created with a label.

☆:Spare

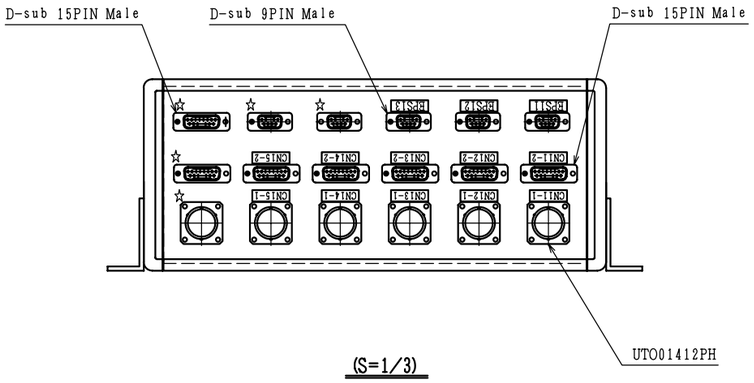

(S=1/3)

Z	Y	X	W	V	U	T	S	R	Q	P	O	N	M	L	K	J	I	H	G	F	E	D	C	B	A	No.	Symbol	DWG No.	Item	Parts number	Manufac.	Remarks

4				CHECKED BY	DESIGNED BY	DRAWN BY	RELEASED BY	TITLE
3				OKA	Maezeki	Maezeki		FXI CM Connector BOX
2				18/Nov./2015	17/Nov./2015	17/Nov./2015		
1				TOYAMA co.,Ltd			SH No. 1/1	DWG No. 2AI-00235 0 PCS
REV	MODIFICATION	DATE	MOD/BY					

1

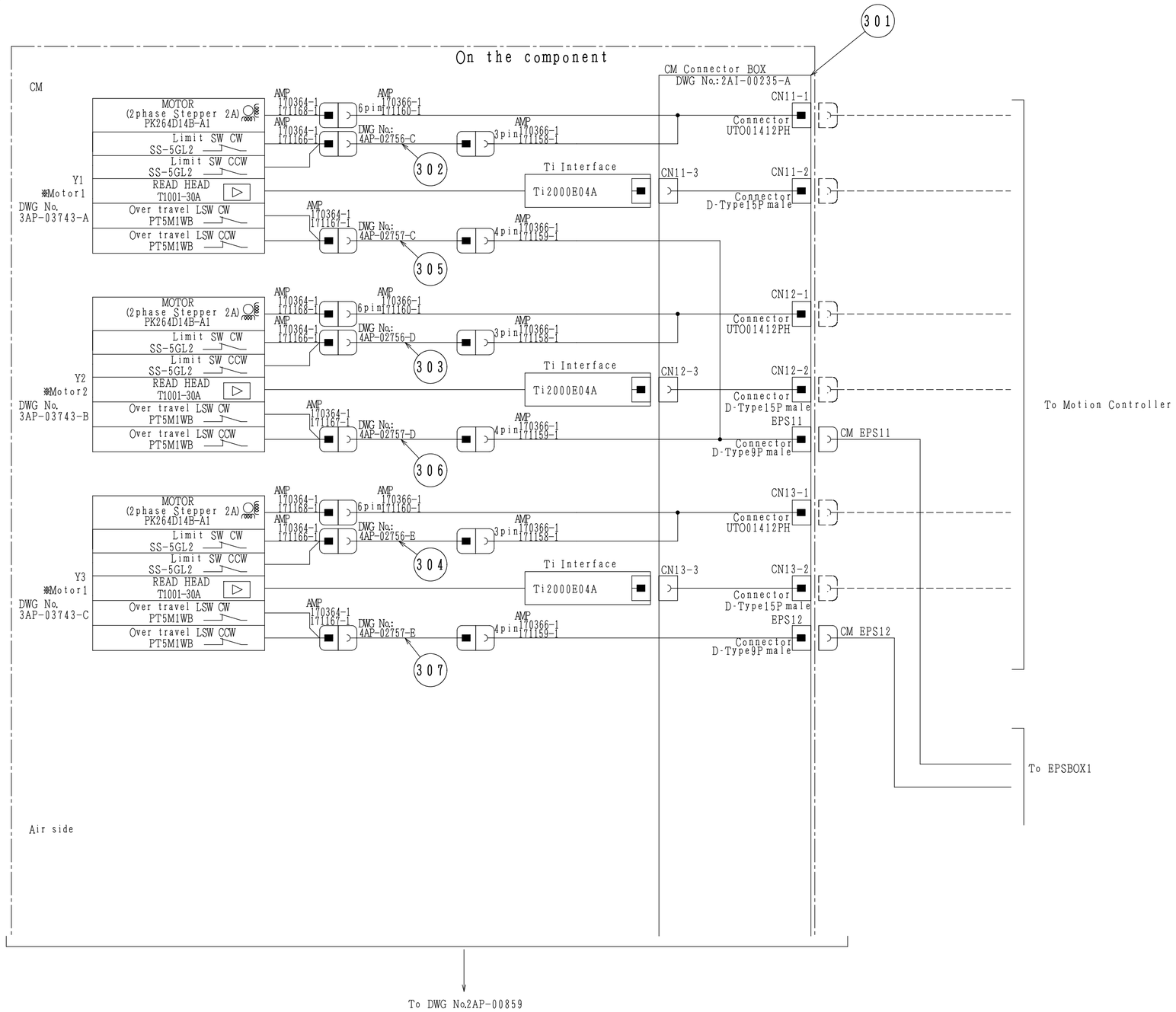

Motor Connector pin arrangements
CN11-1、CN12-1、CN13-1
(Receptacle UTO01412PH)

Pin	Description
A	Not used
B	Motor Phase A+
C	Motor Phase A-
D	Motor Phase B+
E	Motor Phase B-
F	Shield
G	End Switch '+' direction
H	End Switch '-' direction
J	Not used
K	Not used
L	24V Limit Supply
M	0V

Encoder Connector pin arrangements
CN11-2、CN12-2、CN13-2
(Receptacle 15-way D-type subminiture connector)

Pin	Description
1	Not used
2	Encoder Power (0V)
3	Not used
4	ChC-
5	ChB-
6	ChA-
7	Encoder Power (5V)
8	Encoder Power (5V)
9	Encoder Power (0V)
10	Not used
11	Not used
12	ChC+
13	ChB+
14	ChA+
15	Not used

Overtravel limits pin arrangements
EPS11, 12
Limit switch D-type9 Connector

Pin	Description
1	Motor1 Negative Limit
2	Motor1 Negative Limit Return
3	Motor1 Positive Limit
4	Motor1 Positive Limit Return
5	Motor2 Negative Limit
6	Motor2 Negative Limit Return
7	Motor2 Positive Limit
8	Motor2 Positive Limit Return
9	Not used

※Motor1, 2

*---:Outside the specification

No.	Symbol	DWG No.	Item	Parts number	Manufac.	Remarks
1 307		4AP-02757-E	Reverse cable4			
1 306		4AP-02757-D	Reverse cable4			
1 305		4AP-02757-C	Reverse cable4			
1 304		4AP-02756-E	Reverse cable3			
1 303		4AP-02756-D	Reverse cable3			
1 302		4AP-02756-C	Reverse cable3			
1 301		2AI-00235-A	FXI CM Connector BOX Assembly			

REV	MODIFICATION	DATE	MOD/BY
4			
3			
2			
1			

CHECKED BY	DESIGNED BY	DRAWN BY	RELEASED BY
OKA	D.SUZUKI	D.SUZUKI	
16/Nov./2015	16/Nov./2015	16/Nov./2015	

TOYAMA CO.,LTD

TITLE
CM
Connection diagram1

SH No. 1/2

DWG No. 2AP-00858 0

PCS

1

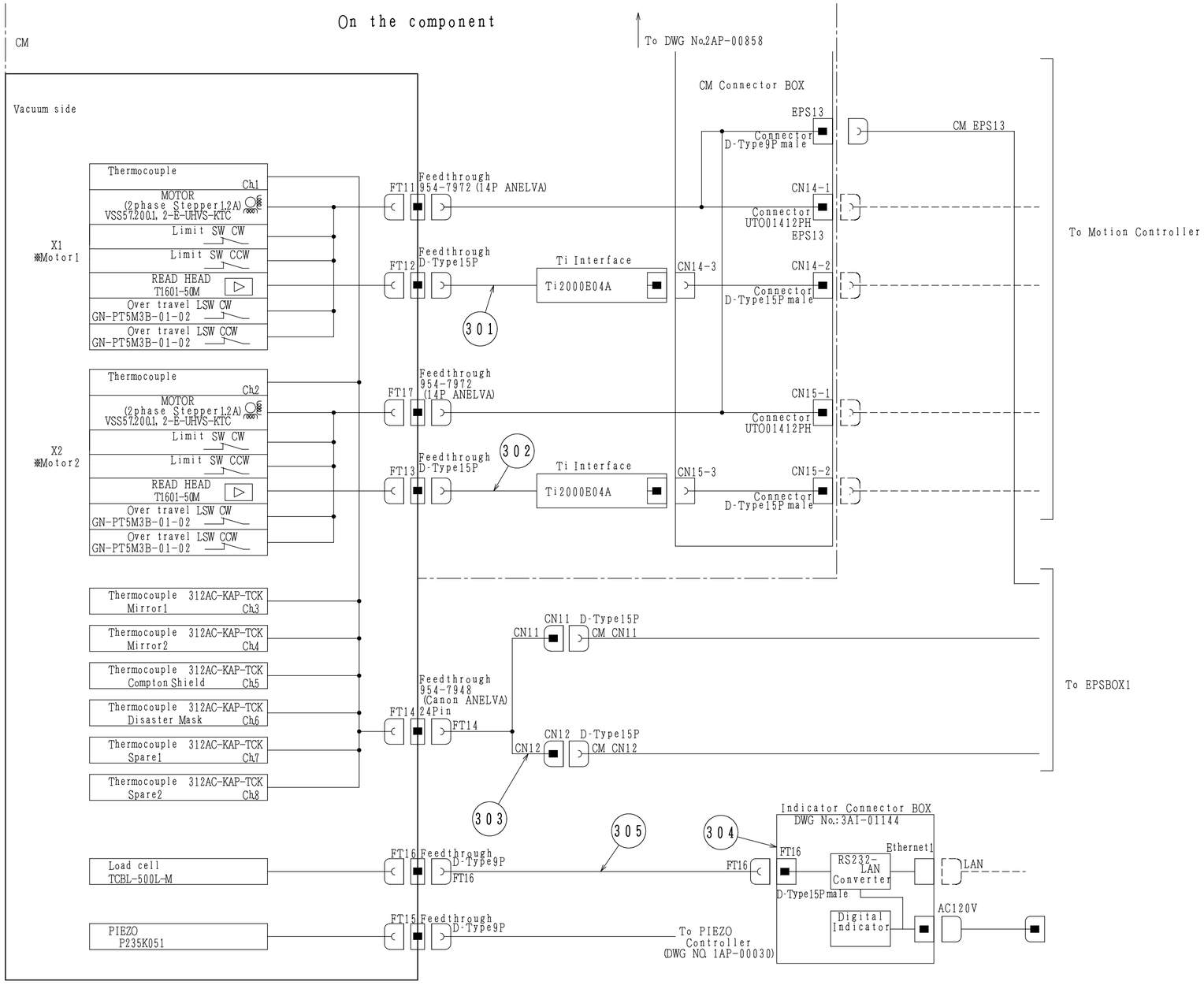

Motor Connector pin arrangements
CN14-1、CN15-1
(Receptacle UTO01412PH)

Pin	Description
A	Not used
B	Motor Phase A+
C	Motor Phase A-
D	Motor Phase B+
E	Motor Phase B-
F	Shield
G	End Switch '+' direction
H	End Switch '-' direction
J	Not used
K	Not used
L	24V Limit Supply
M	0V

Encoder Connector pin arrangements
CN14-2、CN15-2
(Receptacle 15-way D-type subminiture connector)

Pin	Description
1	Not used
2	Encoder Power (0V)
3	Not used
4	Ch.C-
5	Ch.B-
6	Ch.A-
7	Encoder Power (5V)
8	Encoder Power (5V)
9	Encoder Power (0V)
10	Not used
11	Not used
12	Ch.C+
13	Ch.B+
14	Ch.A+
15	Not used

Overtravel limits pin arrangements
EPS13
Limit switch D-type9 Connector

Pin	Description
1	Motor1 Negative Limit
2	Motor1 Negative Limit Return
3	Motor1 Positive Limit
4	Motor1 Positive Limit Return
5	Motor2 Negative Limit
6	Motor2 Negative Limit Return
7	Motor2 Positive Limit
8	Motor2 Positive Limit Return
9	Not used

※Motor1, 2

Thermocouples pin arrangements
CN11・12
(Receptacle 15-way D-type subminiture connector)

Pin	Description
1	Ch.1、7 chromel +
2	Ch.2、8 chromel +
3	Ch.3、9 chromel +
4	Ch.4、10 chromel +
5	Ch.5 chromel +
6	Ch.6 chromel +
7	Not used
8	Not used
9	Ch.1、7 alumel -
10	Ch.2、8 alumel -
11	Ch.3、9 alumel -
12	Ch.4、10 alumel -
13	Ch.5 alumel -
14	Ch.6 alumel -
15	Not used

Gate valve pin arrangements
Limit switch 6PConnector

Pin	Description
1	OPEN Limit Supply (DC24V)
2	OPEN Limit Return
3	Not used
4	Not used
5	CLOSE Limit Suply (DC24V)
6	CLOSE Limit Return

Solenoid Valve 3PConnector

Pin	Description
1	DC24V Supply
2	0V
3	Not used

*---:Outside the specification

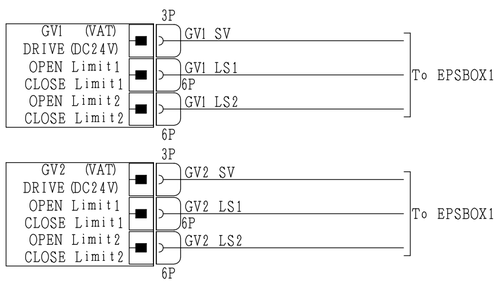

No.	Symbol	DWG No.	Item	Parts number	Manufac.	Remarks
1	305	3AP-03805	Load cell cable			
1	304	3AI-01144	Indicator Connector BOX			
1	303	3AP-03499	Ktype Cable			
1	302	3AP-03656-B	Encoder cable			
1	301	3AP-03656-A	Encoder cable			
0	1		Assembly			

Z Y X W V U T S R Q P O N M L K J I H G F E D C B A

REV	MODIFICATION	DATE	MOD/BY
4			
3			
2			
1			

CHECKED BY	DESIGNED BY	DRAWN BY	RELEASED BY
OKA	D.SUZUKI	D.SUZUKI	
16/Nov./2015	16/Nov./2015	16/Nov./2015	

TOYAMA CO.,LTD

TITLE: CM Connection diagram2

SH No. 2/2

DWG No. 2AP-00859 0 PCS

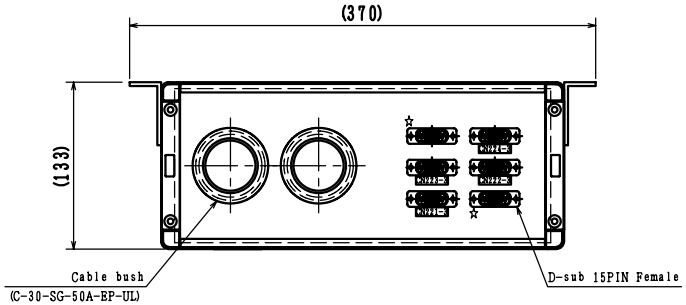

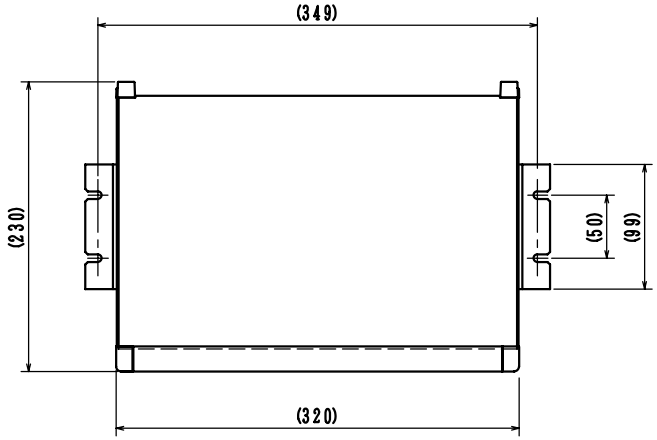

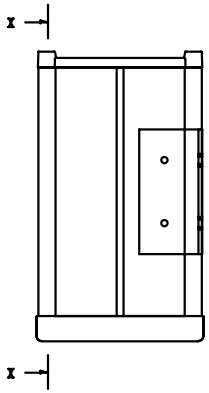

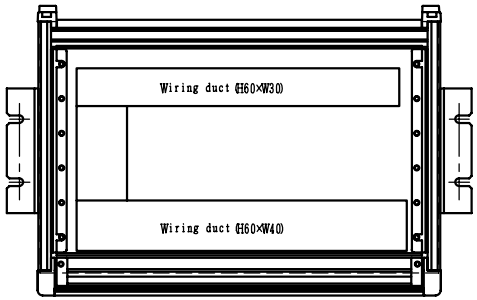

X-X Section

CASE:MO133-32-23G (TAKACHI)

The character notation of a panel is created with a label.

☆:Spare

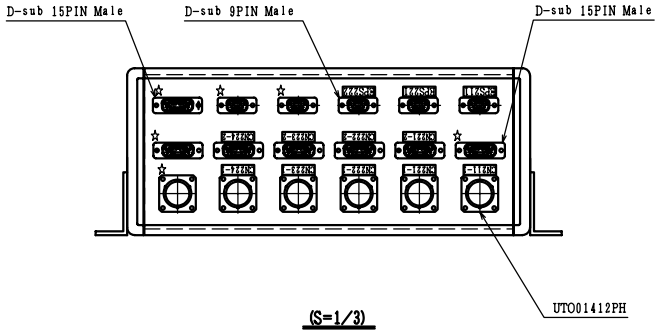

(S=1/3)

Z	Y	X	W	V	U	T	S	R	Q	P	O	N	M	L	K	J	I	H	G	F	E	D	C	B	A	No.	Symbol	DWG No.	Item	Parts number	Manufac.	Remarks

REV	MODIFICATION	DATE	MOD/BY
4			
3			
2			
1			

CHECKED BY	DESIGNED BY	DRAWN BY	RELEASED BY	TITLE
OKA	Maezeki	Maezeki		FXI WPFS-PBSL Connector BOX
18/Nov./2015	17/Nov./2015	17/Nov./2015		

TOYAMA co.,Ltd

SH No. 1/1

DWG No. 2AI-00236 0 PCS

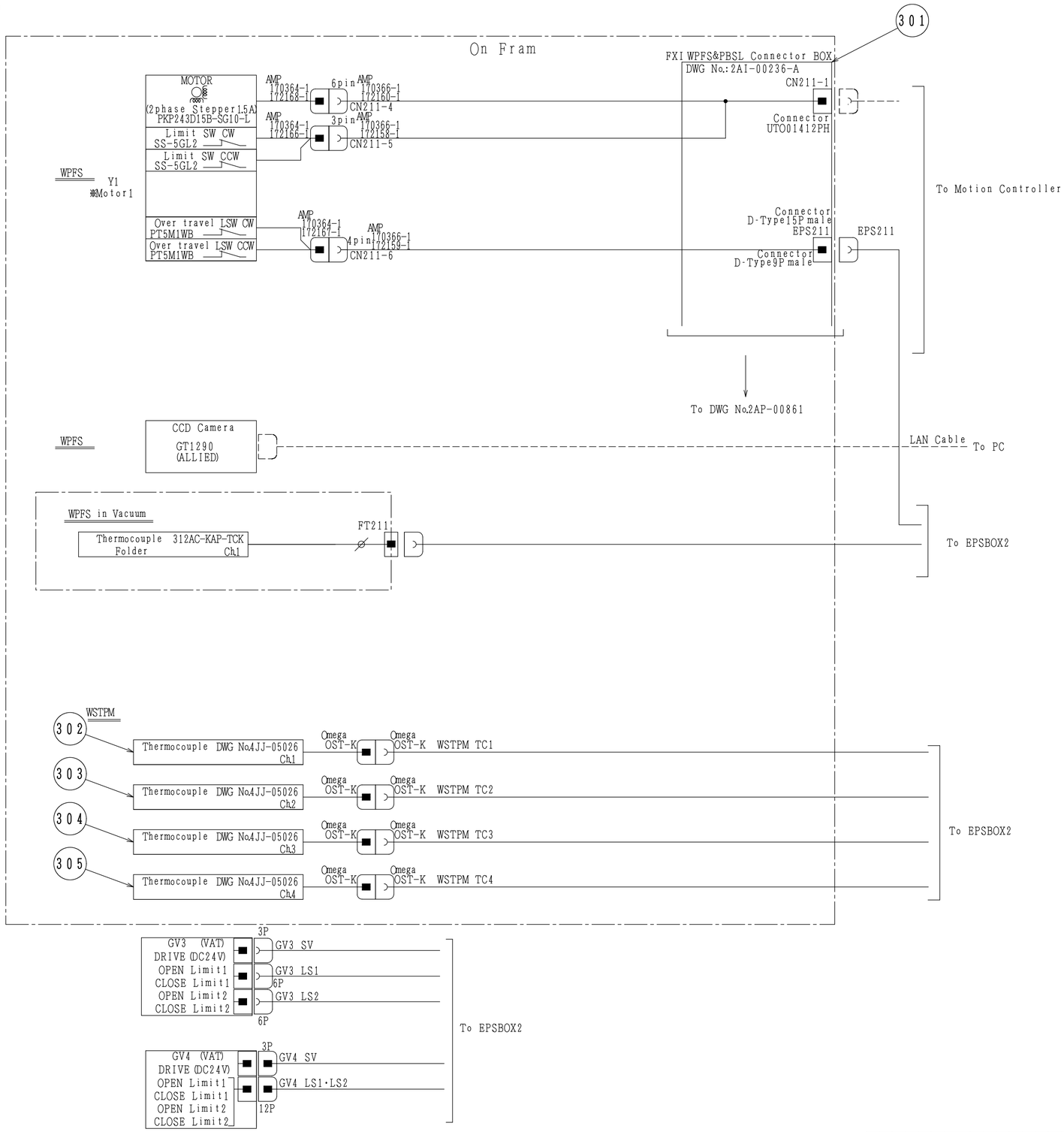

Motor Connector pin arrangements
CN211-1
(Receptacle UTO01412PH)

Pin	Description
A	Not used
B	Motor Phase A+
C	Motor Phase A-
D	Motor Phase B+
E	Motor Phase B-
F	Shield
G	End Switch '+' direction
H	End Switch '-' direction
J	Not used
K	Not used
L	24V Limit Supply
M	0V

Gate valve pin arrangements
Limit switch 12PConnector

Pin	Description
A	LS1 OPEN Limit Return
B	LS1 OPEN Limit Supply (DC24V)
C	Not used
D	Not used
E	LS1 CLOSE Limit Supply (DC24V)
F	LS1 CLOSE Limit Return
G	LS2 OPEN Limit Return
H	LS2 OPEN Limit Supply (DC24V)
J	Not used
K	Not used
L	LS2 CLOSE Limit Supply (DC24V)
M	LS2 CLOSE Limit Return

Gate valve pin arrangements
Limit switch 6PConnector

Pin	Description
1	OPEN Limit Supply (DC24V)
2	OPEN Limit Return
3	Not used
4	Not used
5	CLOSE Limit Supply (DC24V)
6	CLOSE Limit Return

Solenoid Valve 3PConnector

Pin	Description
1	DC24V Supply
2	0V
3	Not used

Overtravel limits pin arrangements
EPS211
Limit switch D-type9 Connector

Pin	Description
1	Motor1 Negative Limit
2	Motor1 Negative Limit Return
3	Motor1 Positive Limit
4	Motor1 Positive Limit Return
5	Motor2 Negative Limit
6	Motor2 Negative Limit Return
7	Motor2 Positive Limit
8	Motor2 Positive Limit Return
9	Not used

※Motor1, 2

*---:Outside the specification

Z	Y	X	W	V	U	T	S	R	Q	P	O	N	M	L	K	J	I	H	G	F	E	D	C	B	A	No.	Symbol	DWG No.	Item	Parts number	Manufac.	Remarks
																										0	1		2AI-00236-A	Assembly	WPFS&PBSL Connector BOX	
																										1	301					

REV	MODIFICATION	DATE	MOD/BY
4			
3			
2			
1			

CHECKED BY	DESIGNED BY	DRAWN BY	RELEASED BY
OKA	D.SUZUKI	D.SUZUKI	
16/Nov./2015	16/Nov./2015	16/Nov./2015	

TOYAMA CO.,LTD

TITLE: WPFS&PBSL Connection Diagram1

SH No. 1/2

DWG No. 2AP-00860 0 PCS

1

On the component

PBSL

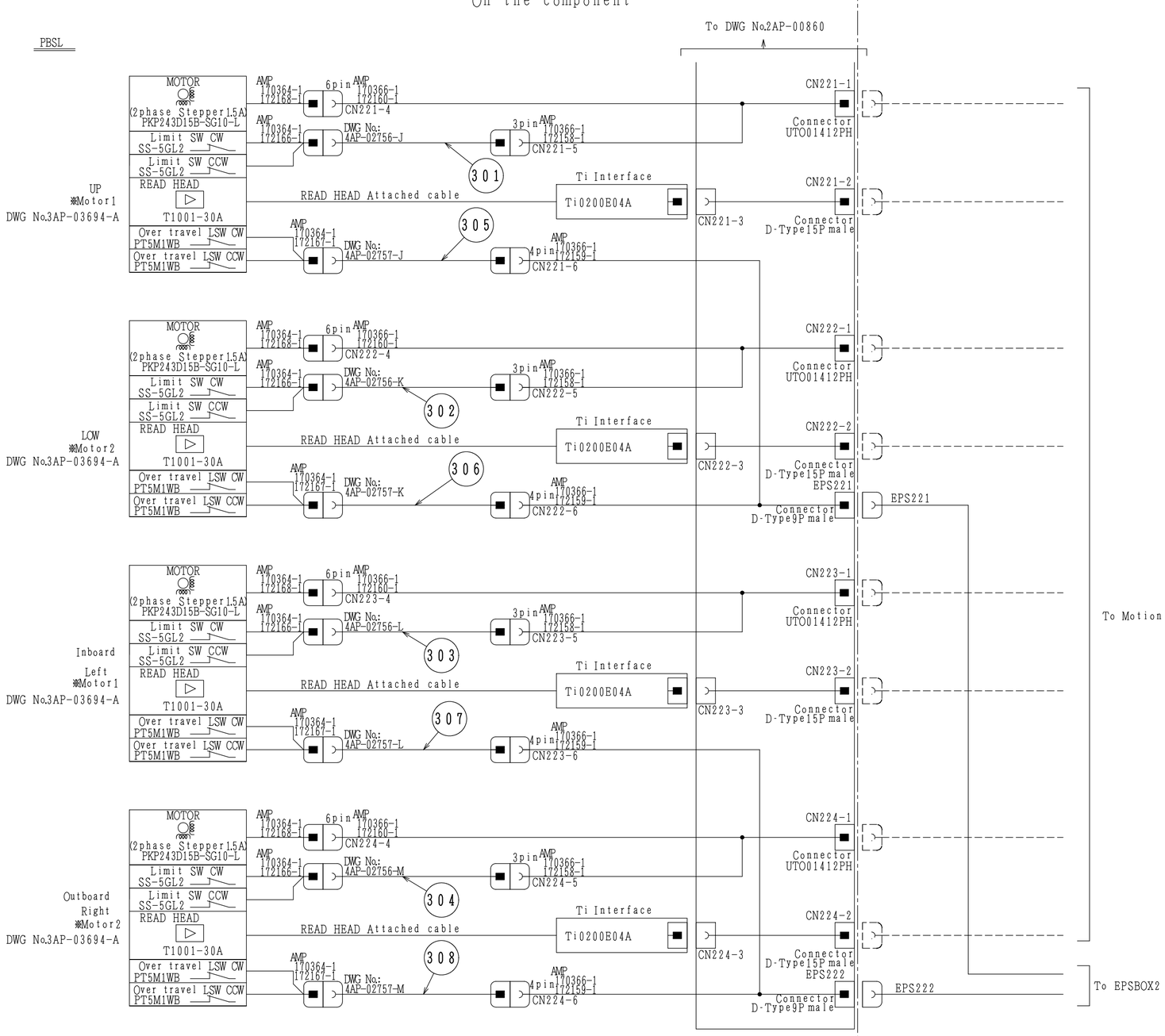

Motor Connector pin arrangements
CN221-1、CN222-1、CN223-1、CN224-1
(Receptacle UT001412PH)

Pin	Description
A	Not used
B	Motor Phase A+
C	Motor Phase A-
D	Motor Phase B+
E	Motor Phase B-
F	Shield
G	End Switch '+' direction
H	End Switch '-' direction
J	Not used
K	Not used
L	24V Limit Supply
M	0V

Encorder Connector pin arrangements
CN221-2、CN222-2、CN223-2、CN224-2
(Receptacle 15-way D-type subminiature connector)

Pin	Description
1	Not used
2	Encoder Power (0V)
3	Not used
4	ChC-
5	ChB-
6	ChA-
7	Encoder Power (5V)
8	Encoder Power (5V)
9	Encoder Power (0V)
10	Not used
11	Not used
12	ChC+
13	ChB+
14	ChA+
15	Not used

Overtravel limits pin arrangements
EPS221, 222
Limit switch D-type9 Connector

Pin	Description
1	Motor1 Negative Limit
2	Motor1 Negative Limit Return
3	Motor1 Positive Limit
4	Motor1 Positive Limit Return
5	Motor2 Negative Limit
6	Motor2 Negative Limit Return
7	Motor2 Positive Limit
8	Motor2 Positive Limit Return
9	Not used

※Motor1, 2

*---:Outside the specification

PBSL in Vacuum

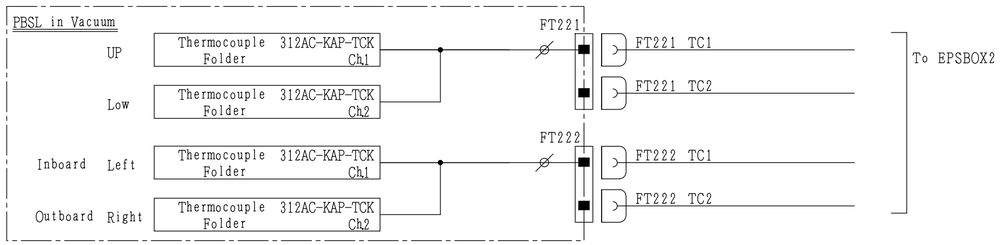

Z	Y	X	W	V	U	T	S	R	Q	P	O	N	M	L	K	J	I	H	G	F	E	D	C	B	A	No.	Symbol	DWG No.	Item	Parts number	Manufac.	Remarks
																										1	308	4AP-02757-M	Reverse cable4			
																										1	307	4AP-02757-L	Reverse cable4			
																										1	306	4AP-02757-K	Reverse cable4			
																										1	305	4AP-02757-J	Reverse cable4			
																										1	304	4AP-02756-M	Reverse cable3			
																										1	303	4AP-02756-L	Reverse cable3			
																										1	302	4AP-02756-K	Reverse cable3			
																										1	301	4AP-02756-J	Reverse cable3			
																										0	1		Assembly			

REV	MODIFICATION	DATE	MOD/BY
4			
3			
2			
1			

CHECKED BY	DESIGNED BY	DRAWN BY	RELEASED BY
OKA	D.SUZUKI	D.SUZUKI	
16/Nov./2015	16/Nov./2015	16/Nov./2015	

TOYAMA co.,LTD

TITLE: WPFS&PBSL Connection Diagram2

SH No. 2/2

DWG No. 2AP-00861 △0 PCS

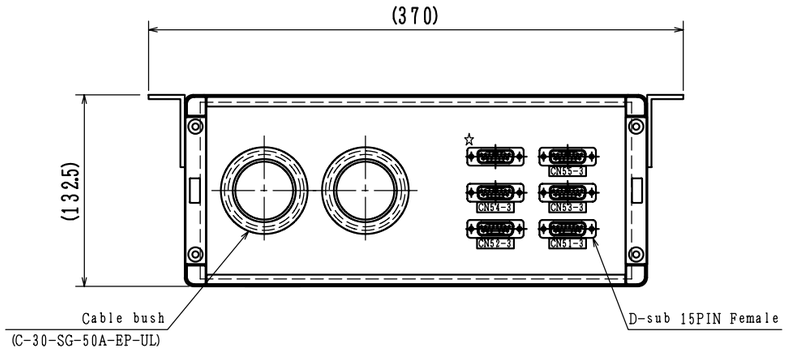

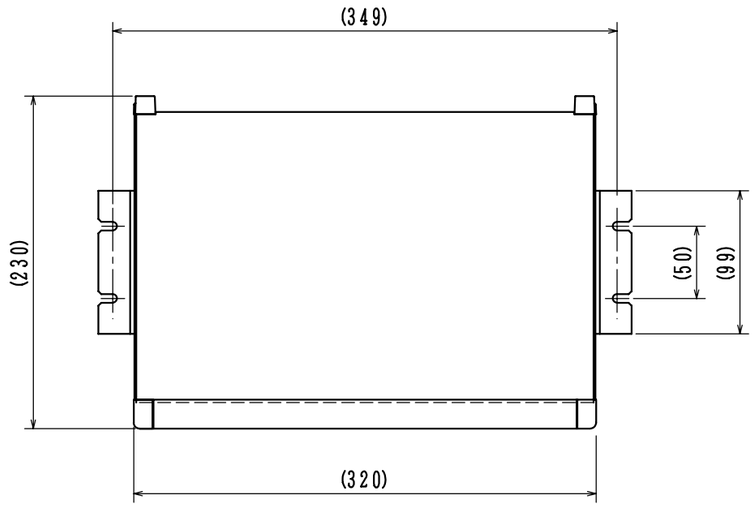

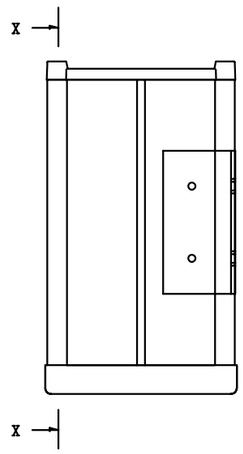

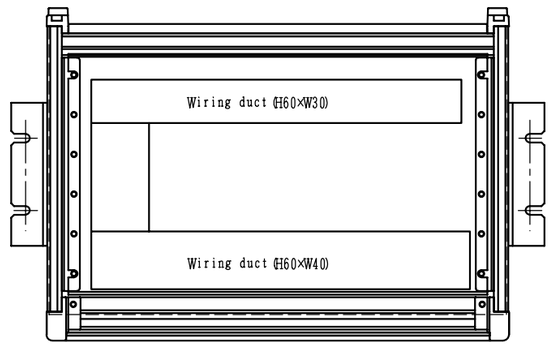

X-X Section

CASE:MO133-32-23G (TAKACHI)

The character notation of a panel is created with a label.

☆:Spare

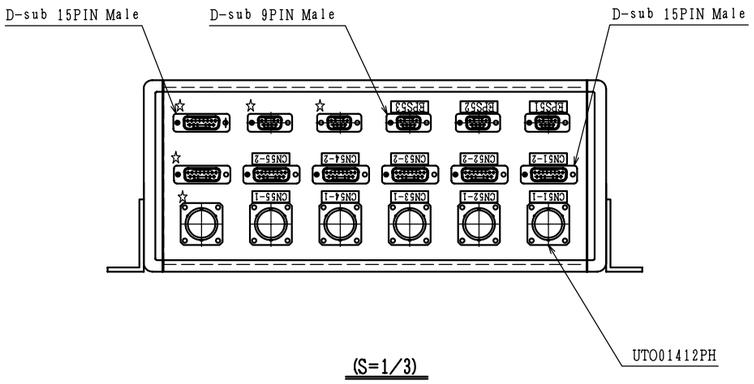

(S=1/3)

Z Y X W V U T S R Q P O N M L K J I H G F E D C B A No.	Symbol	DWG No.	Item	Parts number	Manufac.	Remarks

4			CHECKED BY	DESIGNED BY	DRAWN BY	RELEASED BY	TITLE
3			OKA	Maezeki	Maezeki		FXI TM Connector BOX
2			18/Nov./2015	17/Nov./2015	17/Nov./2015		
1			TOYAMA co.,Ltd			SH No. 1/1	DWG No. 2AI-00237 0 PCS
REV	MODIFICATION	DATE	MOD/BY				

1

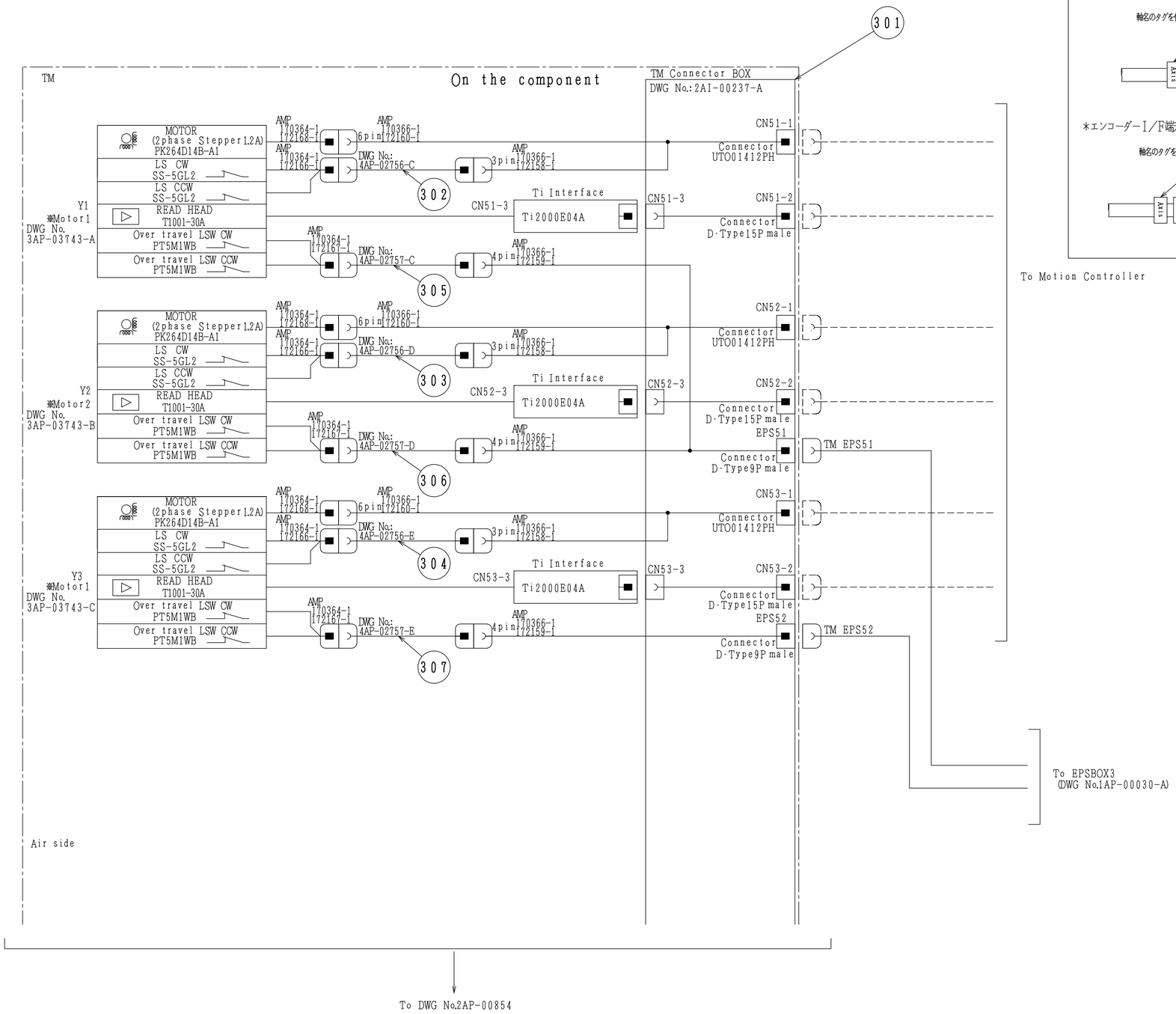

＊ モーター・LSW端末処理詳細図

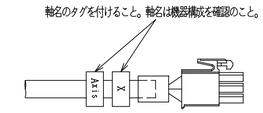

＊エンコーダーI/F端末詳細図

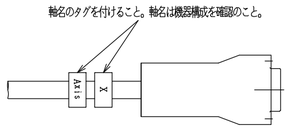

To Motion Controller

Motor Connector pin arrangements
CN51-1、CN52-1、CN53-1

Receptacle UTO01412PH

Pin	Description
A	Not used
B	Motor Phase A+
C	Motor Phase A-
D	Motor Phase B+
E	Motor Phase B-
F	Shield
G	End Switch + direction
H	End Switch − direction
J	Not used
K	Not used
L	24V Limit Supply
M	0V

Encoder Connector pin arrangements
CN51-2、CN52-2、CN53-2

Receptacle (5-way D-type subminiture connector)

Pin	Description
1	Not used
2	Encoder Power (0V)
3	Not used
4	ChC-
5	ChB-
6	ChA-
7	Encoder Power (5V)
8	Encoder Power (5V)
9	Encoder Power (0V)
10	Not used
11	Not used
12	ChC+
13	ChB+
14	ChA+
15	Not used

Overtravel limits pin arrangements
EPS51, 52
Limit switch D-type9 Connector

Pin	Description
1	Motor1 Negative Limit
2	Motor1 Negative Limit Return
3	Motor1 Positive Limit
4	Motor1 Positive Limit Return
5	Motor2 Negative Limit
6	Motor2 Negative Limit Return
7	Motor2 Positive Limit
8	Motor2 Positive Limit Return
9	Not used

※Motor1, 2

＊---:Outside the specification

Z	Y	X	W	V	U	T	S	R	Q	P	O	N	M	L	K	J	I	H	G	F	E	D	C	B	A	No.	Symbol	DWG No.	Item	Parts number	Manufac.	Remarks
																										1	307		4AP-02757-E	Reverse Cable4				
																										1	306		4AP-02757-D	Reverse Cable4				
																										1	305		4AP-02757-C	Reverse Cable4				
																										1	304		4AP-02756-E	Reverse Cable3				
																										1	303		4AP-02756-D	Reverse Cable3				
																										1	302		4AP-02756-C	Reverse Cable3				
																										1	301		2AI-00237-A	FXI TM Connector BOX				
																										0	1			Assembly				

REV	MODIFICATION	DATE	MOD/BY
4			
3			
2			
1			

CHECKED BY	DESIGNED BY	DRAWN BY	RELEASED BY
OKA	Sugai	Sugai	
18/Nov./2015	16/Nov./2014	16/Nov./2015	

TOYAMA CO.,LTD

TITLE
Troidal Mirror
Connection diagram1

SH No. 1/2

DWG No. 2AP-00853 0

PCS

1

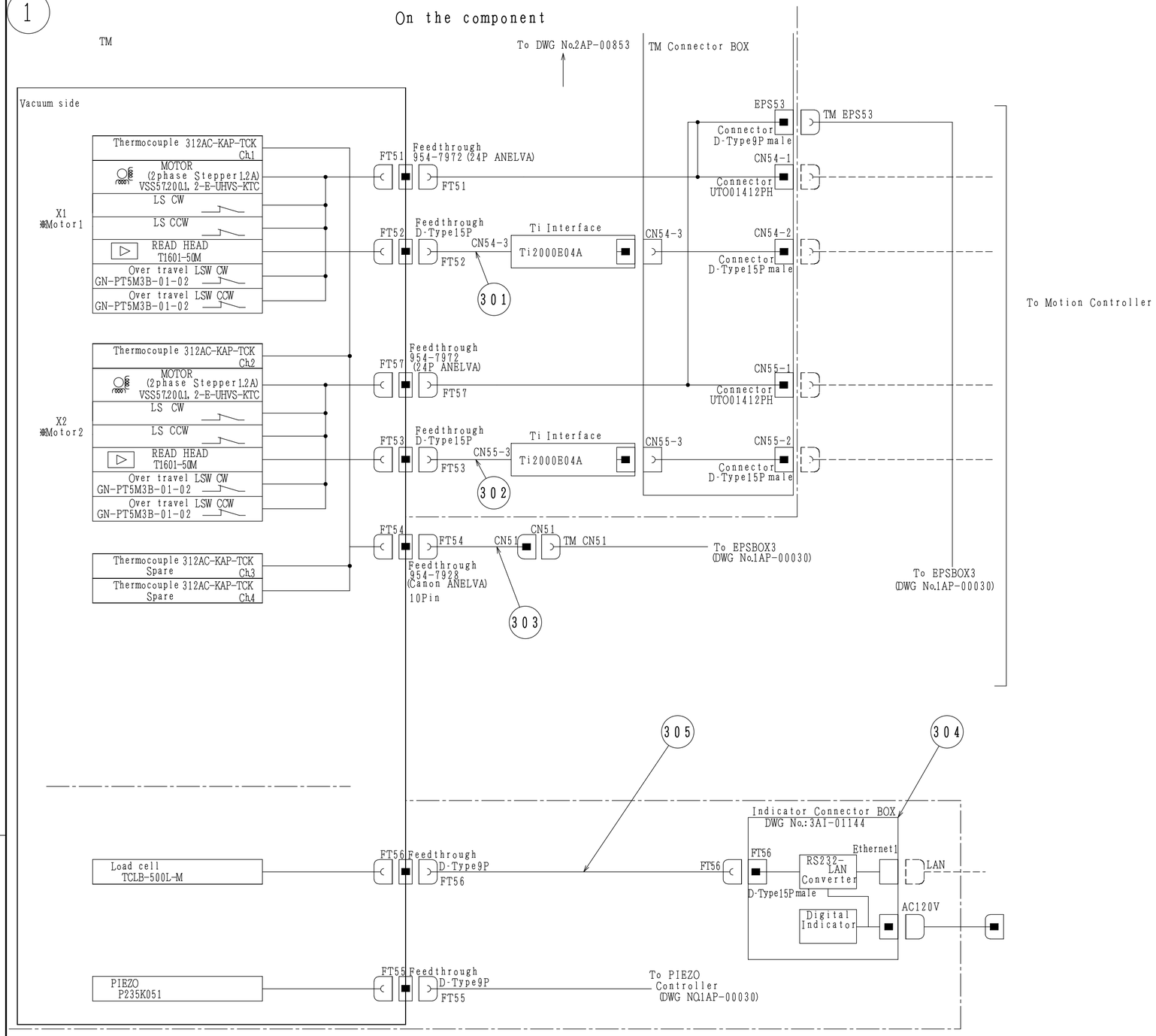

Overtravel limits pin arrangements
EPS53
Limit switch D-type9 Connector

Pin	Description
1	Motor1 Negative Limit
2	Motor1 Negative Limit Return
3	Motor1 Positive Limit
4	Motor1 Positive Limit Return
5	Motor2 Negative Limit
6	Motor2 Negative Limit Return
7	Motor2 Positive Limit
8	Motor2 Positive Limit Return
9	Not used

※Motor1, 2

Motor Connector pin arrangements
CN54-1、CN55-1
Receptacle UT001412PH

Pin	Description
A	Not used
B	Motor Phase A+
C	Motor Phase A-
D	Motor Phase B+
E	Motor Phase B-
F	Shield
G	End Switch + direction
H	End Switch - direction
J	Not used
K	Not used
L	24V Limit Supply
M	0V

Encoder Connector pin arrangements
CN54-2、CN55-2
Receptacle 15-way D-type subminiture connector)

Pin	Description
1	Not used
2	Encoder Power (0V)
3	Not used
4	Ch.C-
5	Ch.B-
6	Ch.A-
7	Encoder Power (5V)
8	Encoder Power (5V)
9	Encoder Power (0V)
10	Not used
11	Not used
12	Ch.C+
13	Ch.B+
14	Ch.A+
15	Not used

Thermocouples pin arrangements
CN51
Receptacle 15-way D-type subminiture connector)

Pin	Description
1	Ch.1 chromel +
2	Ch.2 chromel +
3	Ch.3 chromel +
4	Ch.4 chromel +
5	Not used
6	Not used
7	Not used
8	Not used
9	Ch.1 alumel -
10	Ch.2 alumel -
11	Ch.3 alumel -
12	Ch.4 alumel -
13	Not used
14	Not used
15	Not used

Gate valve pin arrangements
Limit switch 12PConnector

Pin	Description
A	LS1 OPEN Limit Return
B	LS1 OPEN Limit Supply (DC24V)
C	Not used
D	Not used
E	LS1 CLOSE Limit Supply (DC24V)
F	LS1 CLOSE Limit Return
G	LS2 OPEN Limit Return
H	LS2 OPEN Limit Supply (DC24V)
J	Not used
K	Not used
L	LS2 CLOSE Limit Supply (DC24V)
M	LS2 CLOSE Limit Return

Solenoid Valve 3PConnector

Pin	Description
1	DC24V
2	0V
3	Not used

*---:Outside the specification

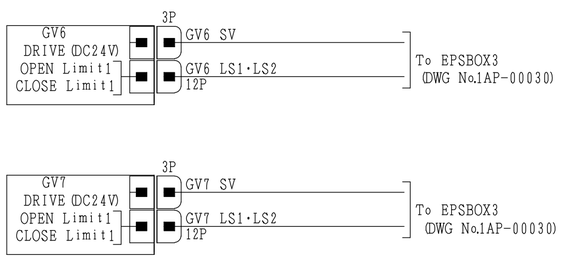

Z	Y	X	W	V	U	T	S	R	Q	P	O	N	M	L	K	J	I	H	G	F	E	D	C	B	A	No.	Symbol	DWG No.	Item	Parts number	Manufac.	Remarks
																										1	305		3AP-03805	Load cell cable				
																										1	304		3AI-01144	Indicator Connector BOX				
																										1	303		3AP-03696	K-TYPE CABLE2				
																										1	302		3AP-03656	Encoder cable				
																										1	301		3AP-03656	Encoder cable				
																										0	1			Assembly				

REV	MODIFICATION	DATE	MOD/BY
4			
3			
2			
1			

CHECKED BY	DESIGNED BY	DRAWN BY	RELEASED BY
OKA	Sugai	Sugai	
18/Nov./2015	16/Nov./2015	16/Nov./2015	

TOYAMA CO.,LTD

TITLE: Troidal Mirror Connection diagram2

SH No. 2/2

DWG No. 2AP-00854 0

P C S

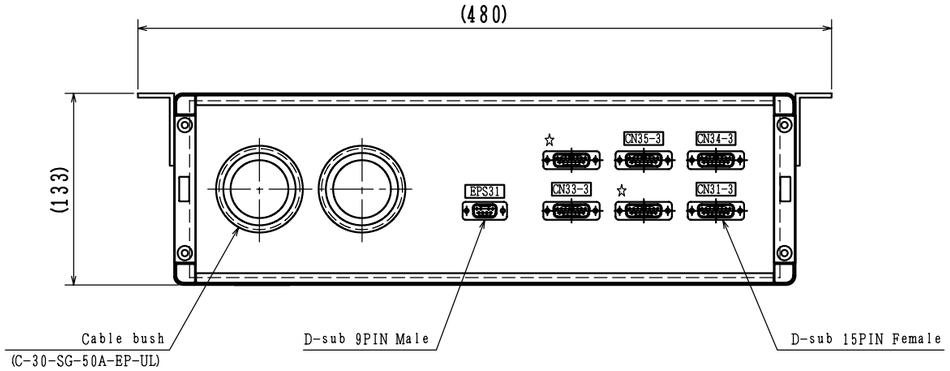

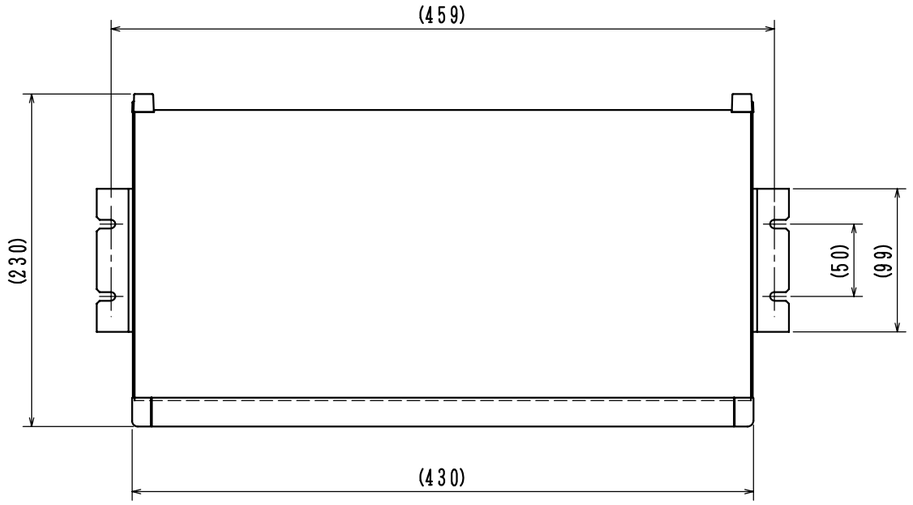

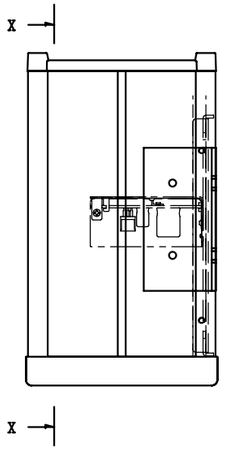

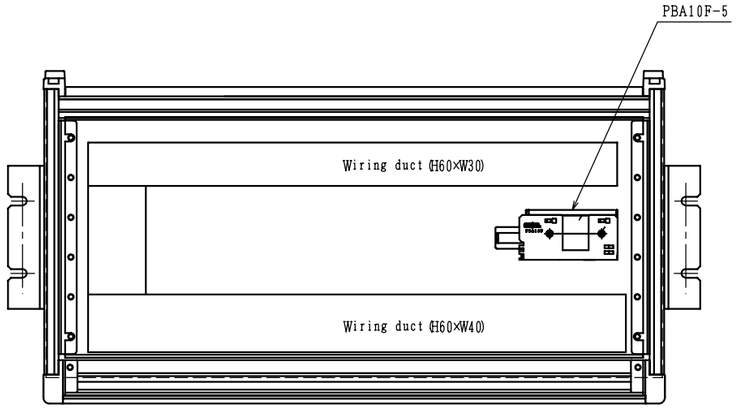

X-X Section

CASE:MO133-43-23G (TAKACHI)

The character notation of a panel is created with a label.

☆:Spare

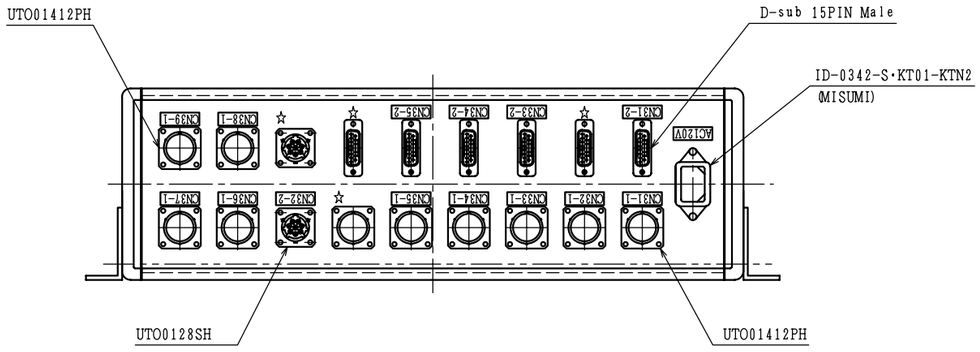

Z	Y	X	W	V	U	T	S	R	Q	P	O	N	M	L	K	J	I	H	G	F	E	D	C	B	A	No.	Symbol	DWG No.	Item	Parts number	Manufac.	Remarks

4				CHECKED BY	DESIGNED BY	DRAWN BY	RELEASED BY	TITLE
3				OKA	Maezeki	Maezeki		FXI DCM Connector BOX
2				18/Nov./2015	17/Nov./2015	17/Nov./2015		
1				TOYAMA co.,Ltd			SH No. 1/1	DWG No. 2AI-00238 0 PCS
REV	MODIFICATION	DATE	MOD/BY					

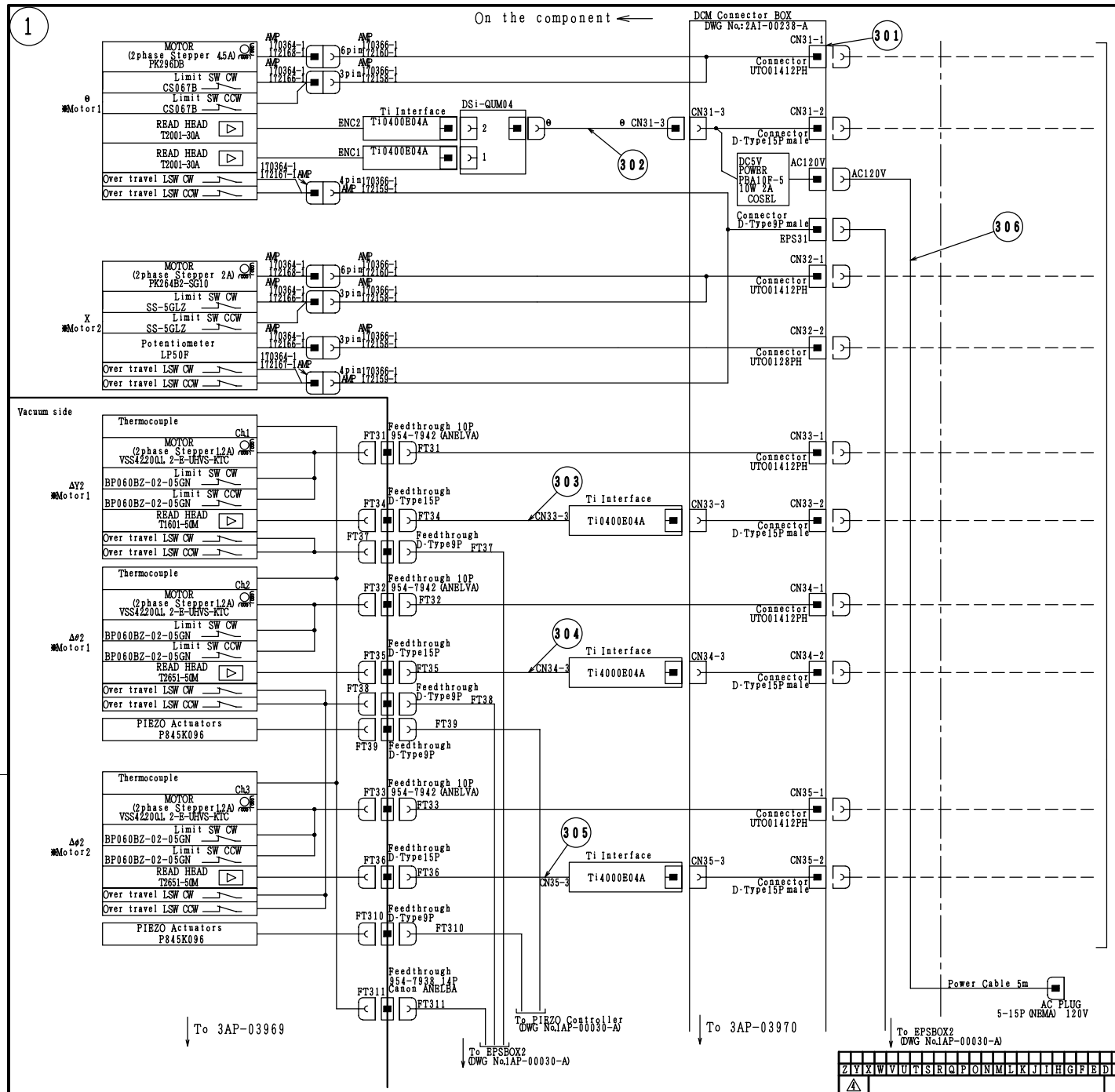

Motor Connector pin arrangements
CN31-1、CN32-1、CN33-1、CN34-1
CN35-1
(Receptacle UTO01412PH)

Pin	Description
A	Not used
B	Motor Phase A+
C	Motor Phase A-
D	Motor Phase B+
E	Motor Phase B-
F	Shield
G	End Switch '+' direction
H	End Switch '-' direction
J	Not used
K	Not used
L	24V Limit Supply
M	0V

Encoder Connector pin arrangements
CN31-2、CN33-2、CN34-2、CN35-2
(Receptacle 15-way D-type subminiature connector)

Pin	Description
1	Not used
2	Encoder Power (0V)
3	Not used
4	ChC-
5	ChB-
6	ChA-
7	Encoder Power (5V)
8	Encoder Power (5V)
9	Encoder Power (0V)
10	Not used
11	Not used
12	ChC+
13	ChB+
14	ChA+
15	Not used

Overtravel limits pin arrangements
EPS31、FT37、38
Limit switch D-type9 Connector

Pin	Description
1	Motor1 Negative Limit
2	Motor1 Negative Limit Return
3	Motor1 Positive Limit
4	Motor1 Positive Limit Return
5	Motor2 Negative Limit
6	Motor2 Negative Limit Return
7	Motor2 Positive Limit
8	Motor2 Positive Limit Return
9	Not used

※Motor1, 2

Potentiometers pin arrangements
CN32-2
(Receptacle UTO0128PH)

Pin	Description
A	Potentiometer1 Voltage Supply
B	Potentiometer1 Output (Signal)
C	Potentiometer1 Voltage Return
D	Potentiometer2 Voltage Supply
E	Potentiometer2 Output (Signal)
F	Potentiometer2 Voltage Return
G	Potentiometer1 Shield
H	Potentiometer2 Shield

*—— :Outside the specification

No.	Symbol	DWG No.	Item	Parts number	Manufac.	Remarks
1 306		4AP-02567	Power Cable			
1 305		3AP-03656	Encoder Cable			
1 304		3AP-03656	Encoder Cable			
1 303		3AP-03656	Encoder Cable			
1 302		3AP-03725	DSi Bypass Cable			
1 301		2AI-00238-A	DCM Connector BOX			
0 1			Assembly			

Z Y X W V U T S R Q P O N M L K J I H G F E D C B A

REV	MODIFICATION	DATE	MOD/BY
4			
3			
2			
1			

CHECKED BY	DESIGNED BY	DRAWN BY	RELEASED BY
OKA	Maezeki	Maezeki	
18/Nov./2015	16/Nov./2015	16/Nov./2015	

TOYAMA co.,Ltd

TITLE: FXI DCM Connection diagram1

SH No. 1/3

DWG No. 2AP-00862 4 PCS

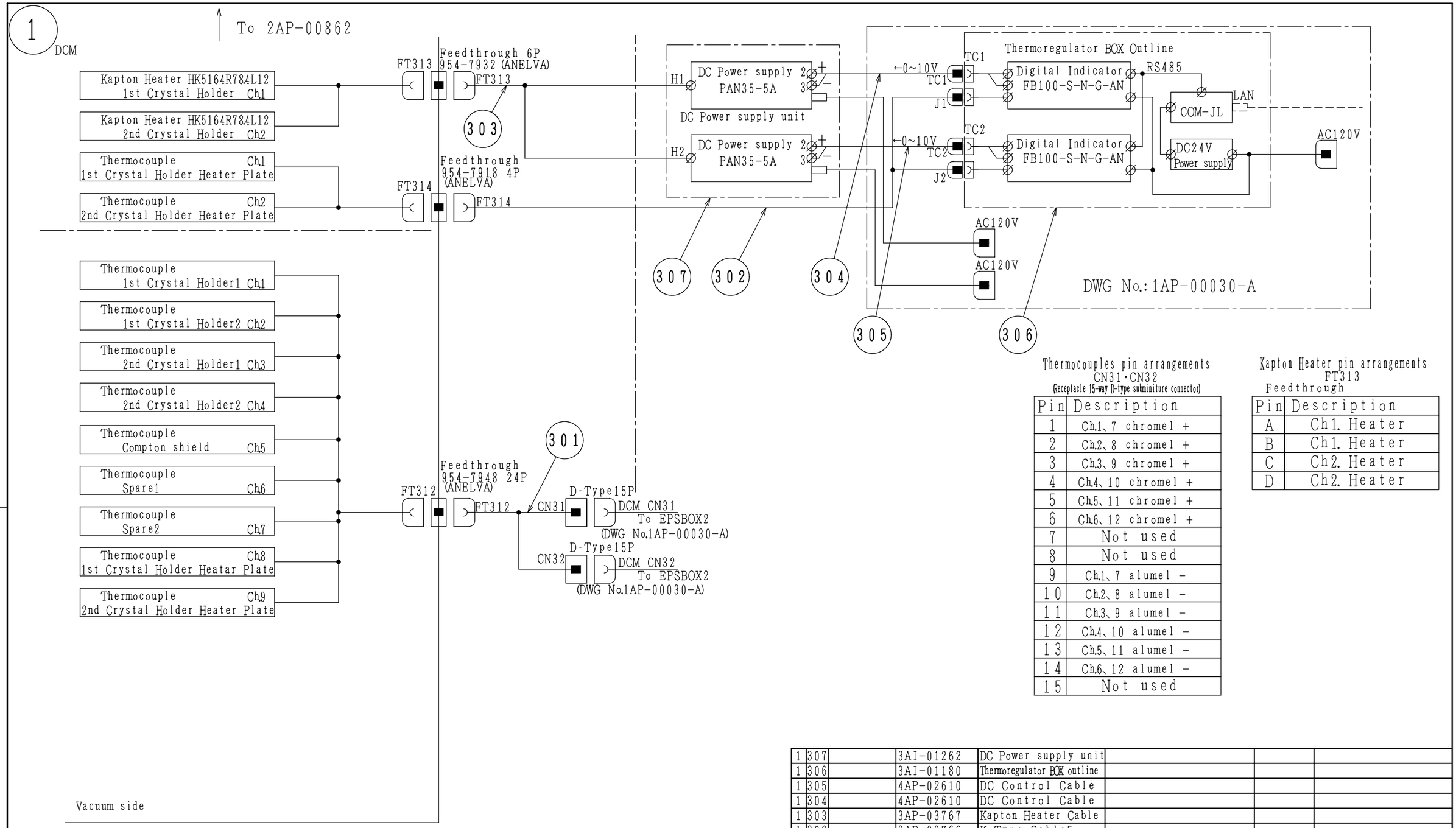

Thermocouples pin arrangements
CN31・CN32
(Receptacle 15-way D-type subminiture connector)

Pin	Description
1	Ch.1、7 chromel +
2	Ch.2、8 chromel +
3	Ch.3、9 chromel +
4	Ch.4、10 chromel +
5	Ch.5、11 chromel +
6	Ch.6、12 chromel +
7	Not used
8	Not used
9	Ch.1、7 alumel −
10	Ch.2、8 alumel −
11	Ch.3、9 alumel −
12	Ch.4、10 alumel −
13	Ch.5、11 alumel −
14	Ch.6、12 alumel −
15	Not used

Kapton Heater pin arrangements
FT313
Feedthrough

Pin	Description
A	Ch1. Heater
B	Ch1. Heater
C	Ch2. Heater
D	Ch2. Heater

Z	Y	X	W	V	U	T	S	R	Q	P	O	N	M	L	K	J	I	H	G	F	E	D	C	B	A	No.	Symbol	DWG No.	Item	Parts number	Manufac.	Remarks
																										0	1		クミタテ			
																										1	301		3AP-03499	K-Type Cable			
																										1	302		3AP-03766	K-Type Cable5			
																										1	303		3AP-03767	Kapton Heater Cable			
																										1	304		4AP-02610	DC Control Cable			
																										1	305		4AP-02610	DC Control Cable			
																										1	306		3AI-01180	Thermoregulator BOX outline			
																										1	307		3AI-01262	DC Power supply unit			

REV	MODIFICATION	DATE	MOD/BY
4			
3			
2			
1			

CHECKED BY	DESIGNED BY	DRAWN BY	RELEASED BY
OKA	Maezeki	Maezeki	
18/Nov./2015	16/Nov./2015	16/Nov./2015	

TOYAMA co.,Ltd

TITLE
FXI DCM
Connection diagram2

SH No. 2/3

DWG No. 3AP-03969 0

PCS

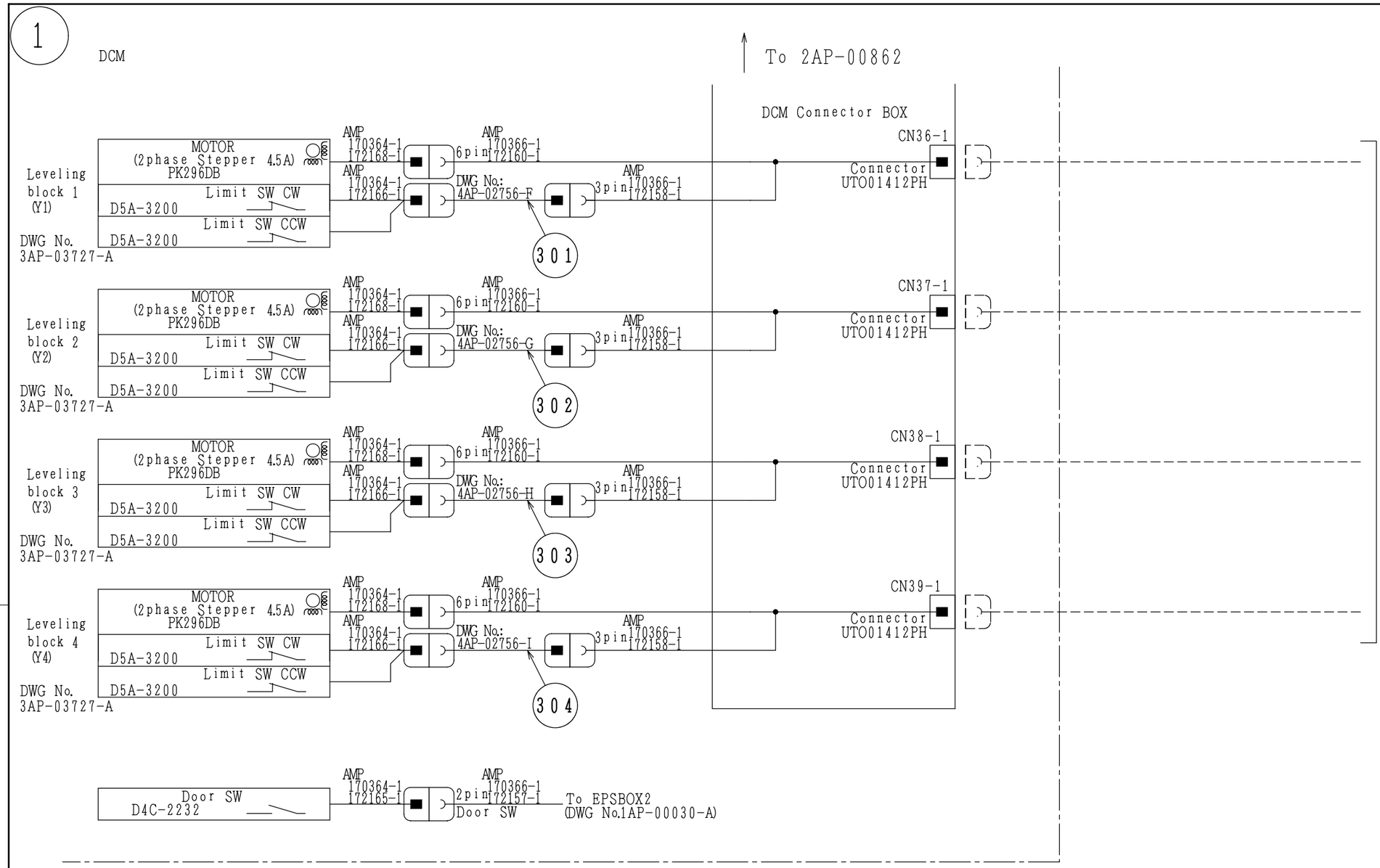

Motor Connector pin arrangements
CN36-1、CN37-1、CN38-1、CN39-1

Receptacle UTO01412PH

Pin	Description
A	Not used
B	Motor Phase A+
C	Motor Phase A-
D	Motor Phase B+
E	Motor Phase B-
F	Shield
G	End Switch "+" direction
H	End Switch "−" direction
J	Not used
K	Not used
L	24V Limit Supply
M	0V

Z	Y	X	W	V	U	T	S	R	Q	P	O	N	M	L	K	J	I	H	G	F	E	D	C	B	A	No.	Symbol	DWG No.	Item	Parts number	Manufac.	Remarks
																										1	304		4AP-02756-I	Reverse cable3			
																										1	303		4AP-02456-H	Reverse cable3			
																										1	302		4AP-02756-G	Reverse cable3			
																										1	301		4AP-02756-F	Reverse cable3			
																										0	1			Assembly			

REV	MODIFICATION	DATE	MOD/BY
4			
3			
2			
1			

CHECKED BY	DESIGNED BY	DRAWN BY	RELEASED BY
OKA	Maezeki	Maezeki	
18/Nov./2015	16/Nov./2015	16/Nov./2015	

TOYAMA CO.,LTD

SH No. 3/3

TITLE: FXI DCM Connection diagram3

DWG No. 3AP-03970 0

PCS

表面粗さ（JIS・ISO） 指示なき表面粗さは、本表による。

Ra 25 6.3 1.6 0.2

<検図> 形 寸 枠 能 組

溶接部品 ヒーター巻き あり なし

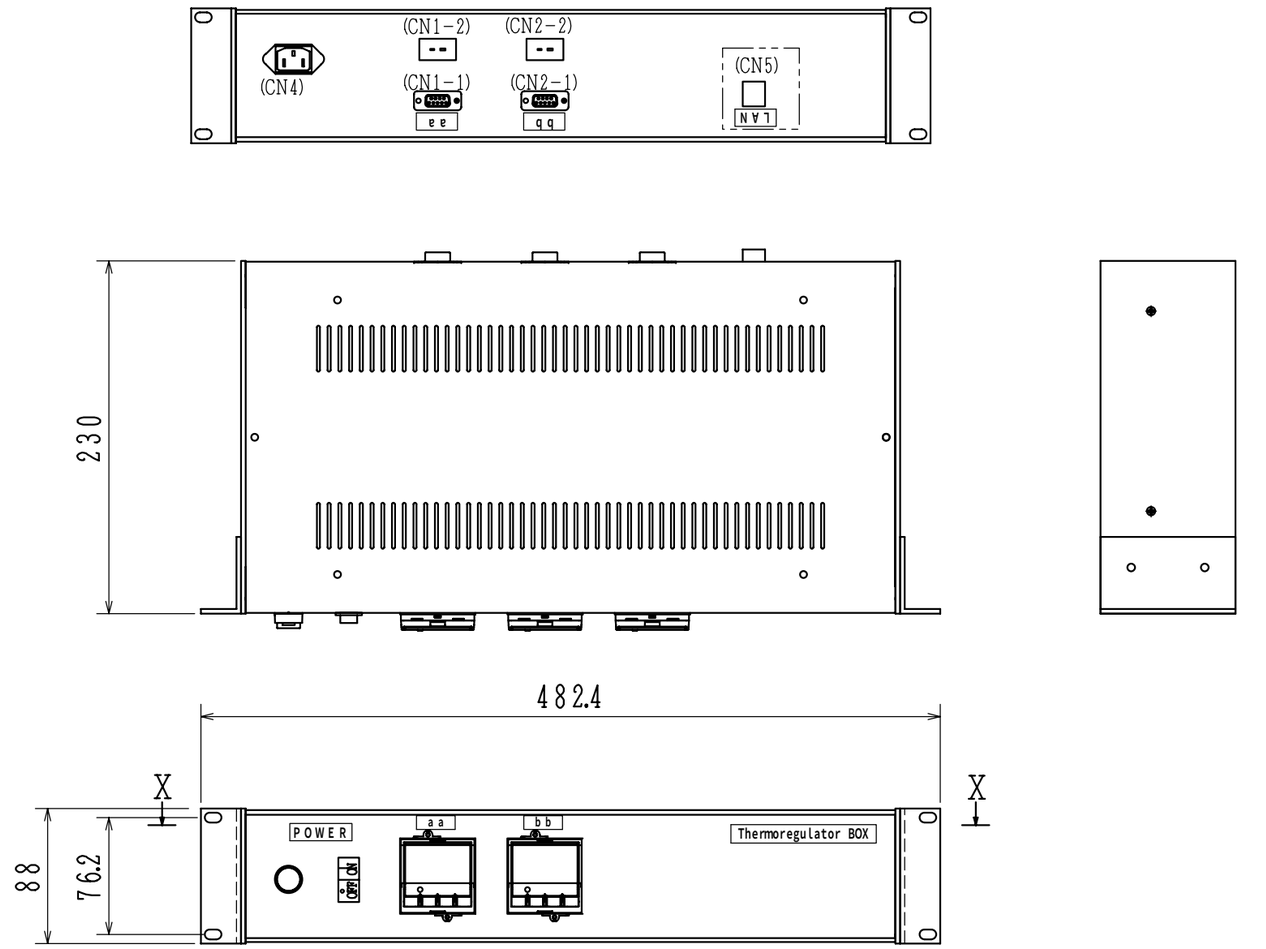

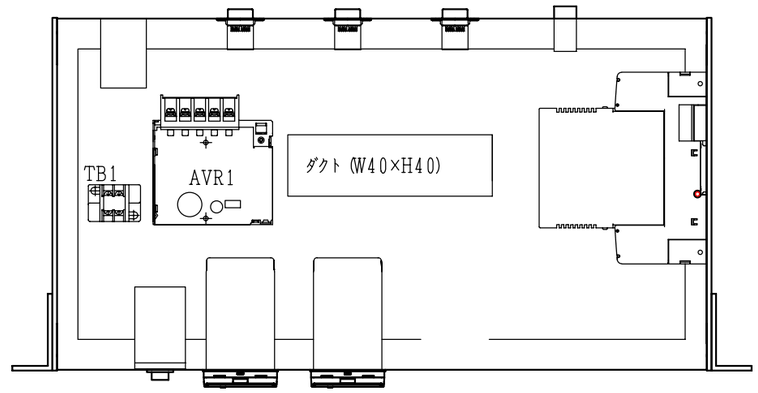

K	J	I	H	G	F	E	D	C	B	A	品番	図番	品名	材質	素材寸法	処理	備考

一般の機械加工の公差 指示なき寸法公差は本表による。						
0.5≦ 6	±0.1	4				
6< 30	±0.2	3				
30< 120	±0.3	2				
120< 400	±0.5	1				
400<1000	±0.8	記号	変更記事	年月日	氏名	

第三角法

検図	設計	製図	出図
OKA	Yoshida	Yoshida	
15-05-27	15-05-19	15-05-19	

TOYAMA CO.,LTD

尺度 1:4

品名 Thermoregulator BOX Outline

図番 3AI-01180 0 PCS

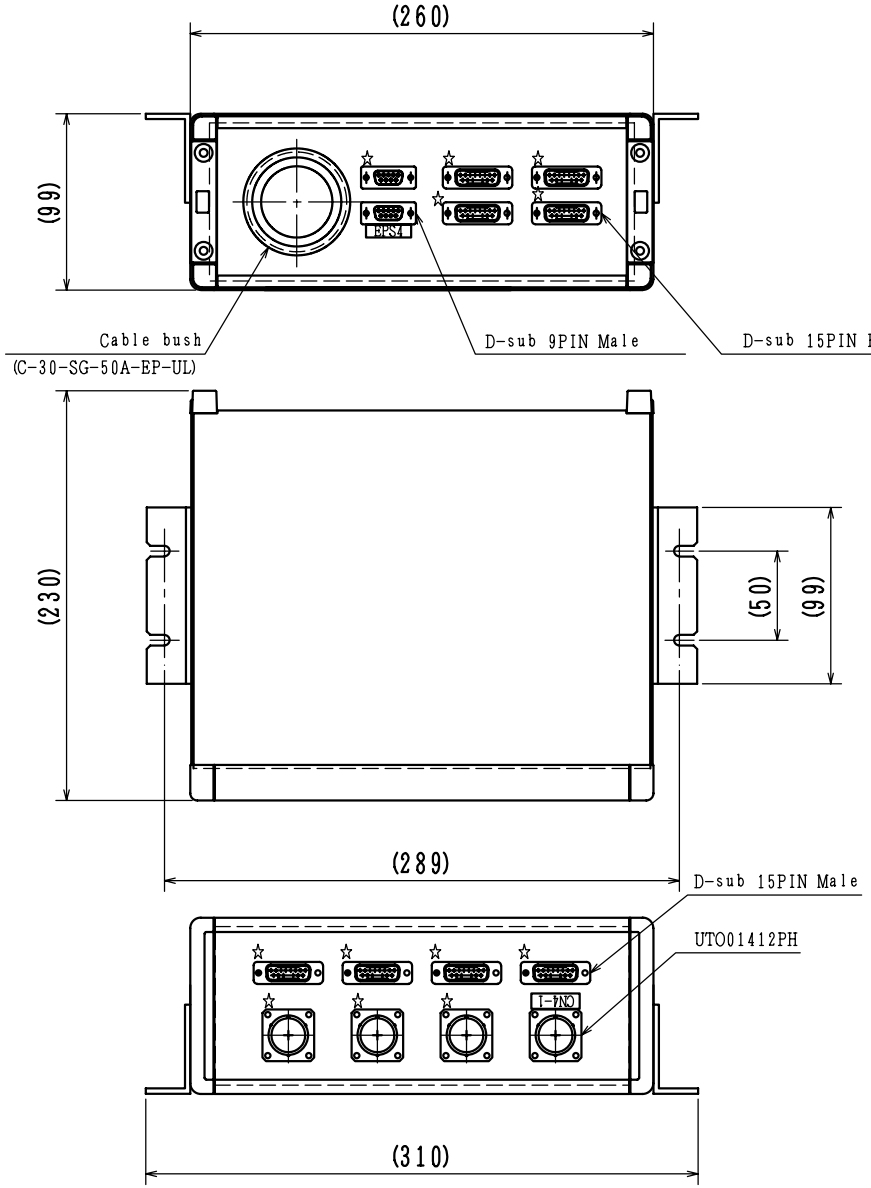

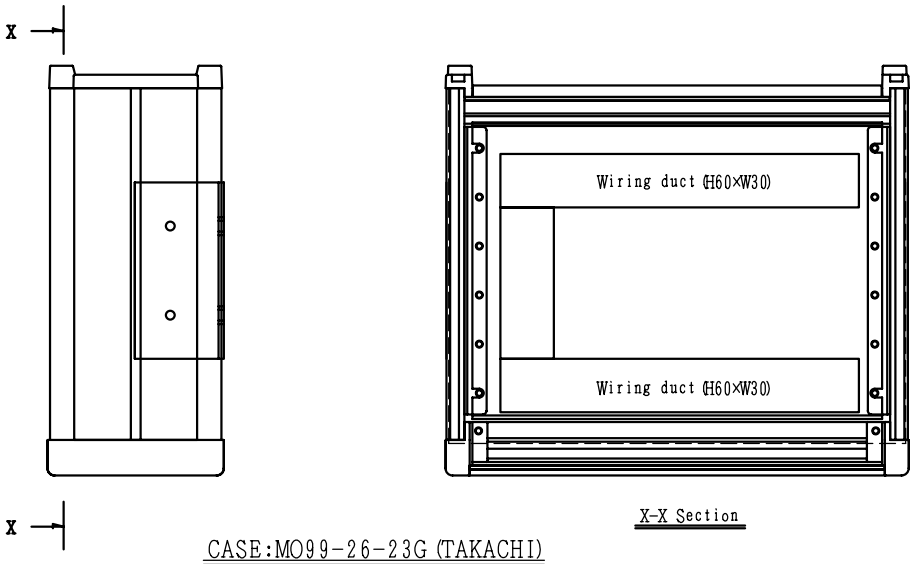

CASE:MO99-26-23G (TAKACHI)

The character notation of a panel is created with a label.

☆:Spare

(S=1/3)

Z	Y	X	W	V	U	T	S	R	Q	P	O	N	M	L	K	J	I	H	G	F	E	D	C	B	A	No.	Symbol	DWG No.	Item	Parts number	Manufac.	Remarks

4				CHECKED BY	DESIGNED BY	DRAWN BY	RELEASED BY	TITLE
3				OKA	Maezeki	Maezeki		PMFS&PBST Connector BOX
2				18/Nov./2015	17/Nov./2015	17/Nov./2015		
1				TOYAMA co.,ltd			SH No. 1/1	DWG No. 3AI-01260 0 PCS
REV	MODIFICATION	DATE	MOD/BY					

1

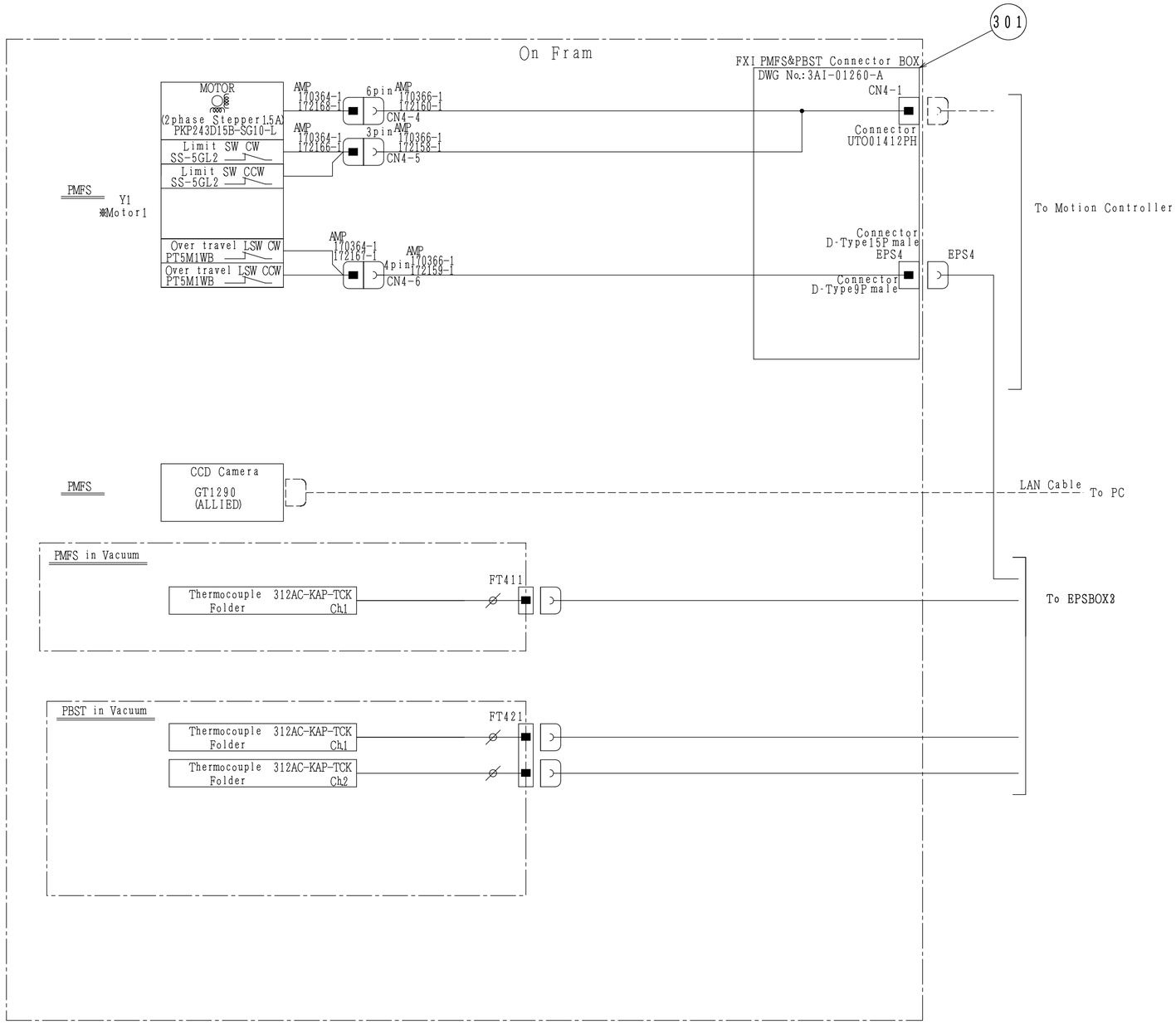

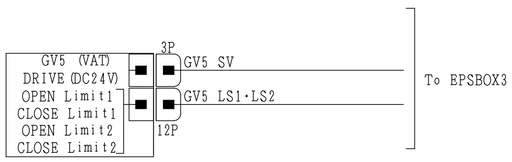

Motor Connector pin arrangements
CN4-1
(Receptacle UTO01412PH)

Pin	Description
A	Not used
B	Motor Phase A+
C	Motor Phase A-
D	Motor Phase B+
E	Motor Phase B-
F	Shield
G	End Switch '+' direction
H	End Switch '-' direction
J	Not used
K	Not used
L	24V Limit Supply
M	0V

Gate valve pin arrangements
Limit switch 12PConnector

Pin	Description
A	LS1 OPEN Limit Return
B	LS1 OPEN Limit Supply (DC24V)
C	Not used
D	Not used
E	LS1 CLOSE Limit Supply (DC24V)
F	LS1 CLOSE Limit Return
G	LS2 OPEN Limit Return
H	LS2 OPEN Limit Supply (DC24V)
J	Not used
K	Not used
L	LS2 CLOSE Limit Supply (DC24V)
M	LS2 CLOSE Limit Return

Solenoid Valve 3PConnector

Pin	Description
1	DC24V Supply
2	0V
3	Not used

Overtravel limits pin arrangements
EPS4
Limit switch D-type9 Connector

Pin	Description
1	Motor1 Negative Limit
2	Motor1 Negative Limit Return
3	Motor1 Positive Limit
4	Motor1 Positive Limit Return
5	Motor2 Negative Limit
6	Motor2 Negative Limit Return
7	Motor2 Positive Limit
8	Motor2 Positive Limit Return
9	Not used

※Motor1, 2

＊ モーター・LSW端末処理詳細図

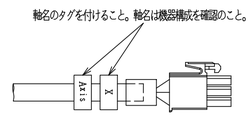

＊エンコーダーI／F端末詳細図

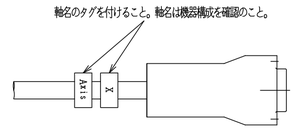

＊－－－:Outside the specification

Z	Y	X	W	V	U	T	S	R	Q	P	O	N	M	L	K	J	I	H	G	F	E	D	C	B	A	No.	Symbol	DWG No.	Item	Parts number	Manufac.	Remarks
																									0	1		3AI-01260-A	PMFS&PBST Connector BOX Assembly			
																										1	301					

REV	MODIFICATION	DATE	MOD/BY
4			
3			
2			
1			

CHECKED BY	DESIGNED BY	DRAWN BY	RELEASED BY
OKA	D.SUZUKI	D.SUZUKI	
16/Nov./2015	16/Nov./2015	16/Nov./2015	

TOYAMA CO.,LTD

SH No. 1/1

TITLE
PMFS&PBST
Connection Diagram1

DWG No. 2AP-00864 0 PCS

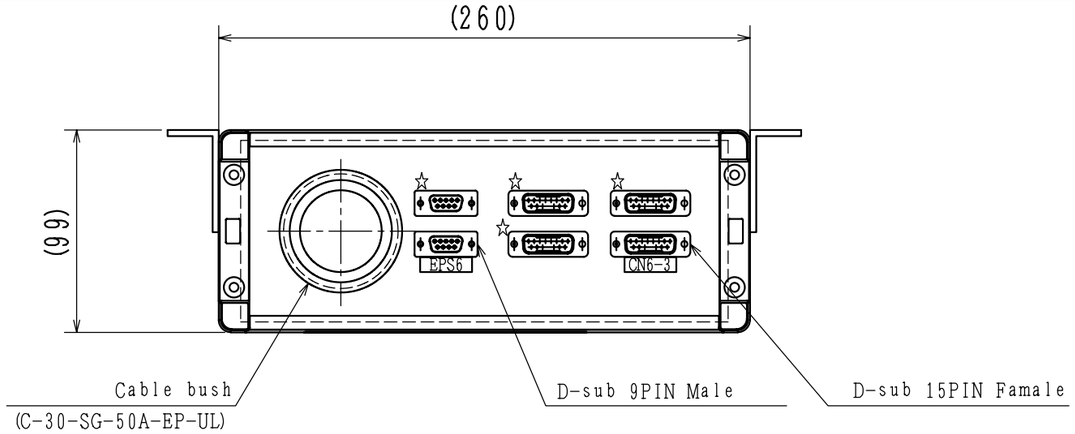

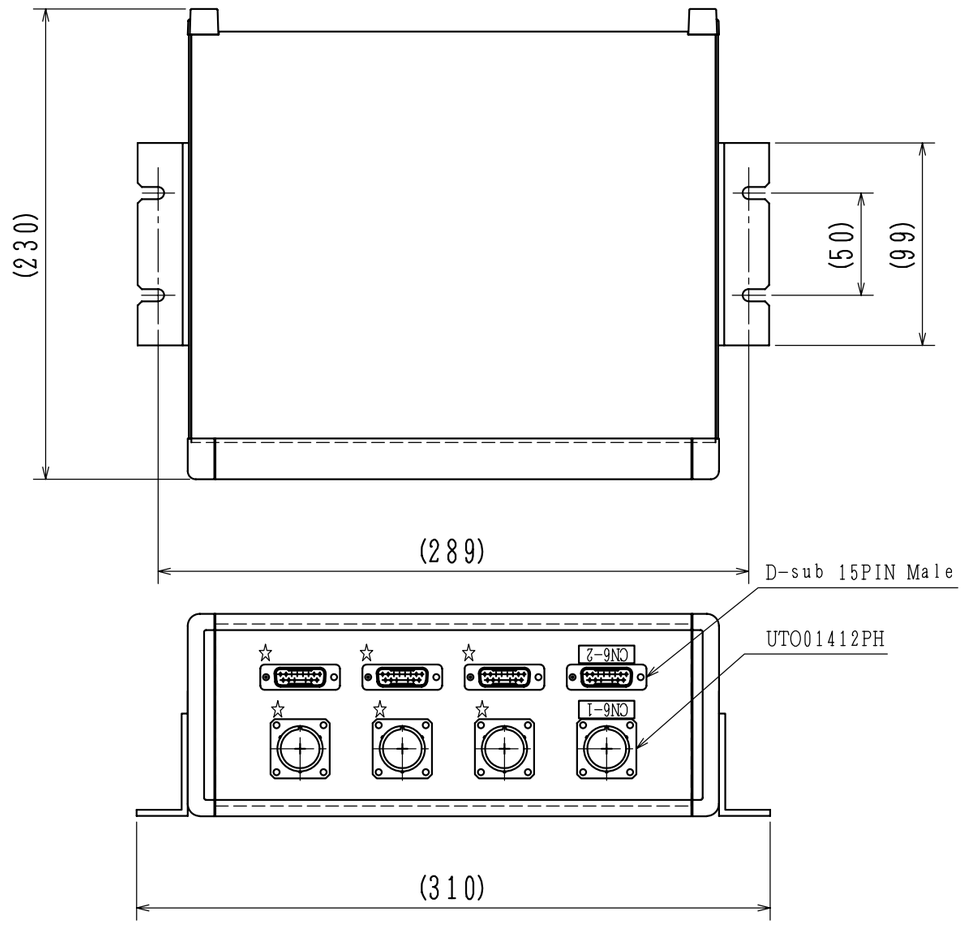

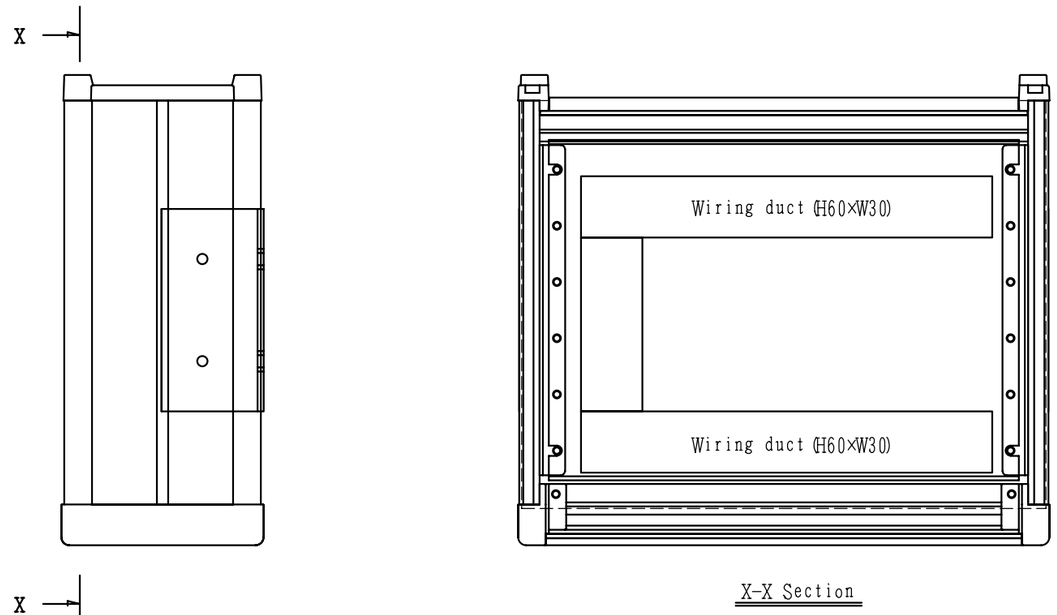

CASE:MO99-26-23G (TAKACHI)

The character notation of a panel is created with a label.

☆:Spare

(S=1/3)

Z	Y	X	W	V	U	T	S	R	Q	P	O	N	M	L	K	J	I	H	G	F	E	D	C	B	A	No.	Symbol	DWG No.	Item	Parts number	Manufac.	Remarks

REV	MODIFICATION	DATE	MOD/BY
4			
3			
2			
1			

CHECKED BY	DESIGNED BY	DRAWN BY	RELEASED BY
OKA	Maezeki	Maezeki	
18/Nov./2015	17/Nov./2015	17/Nov./2015	

TOYAMA CO.,LTD

SH No. 1/1

TITLE: FXI MFS Connector BOX

DWG No. 3AI-01261 0

PCS

1

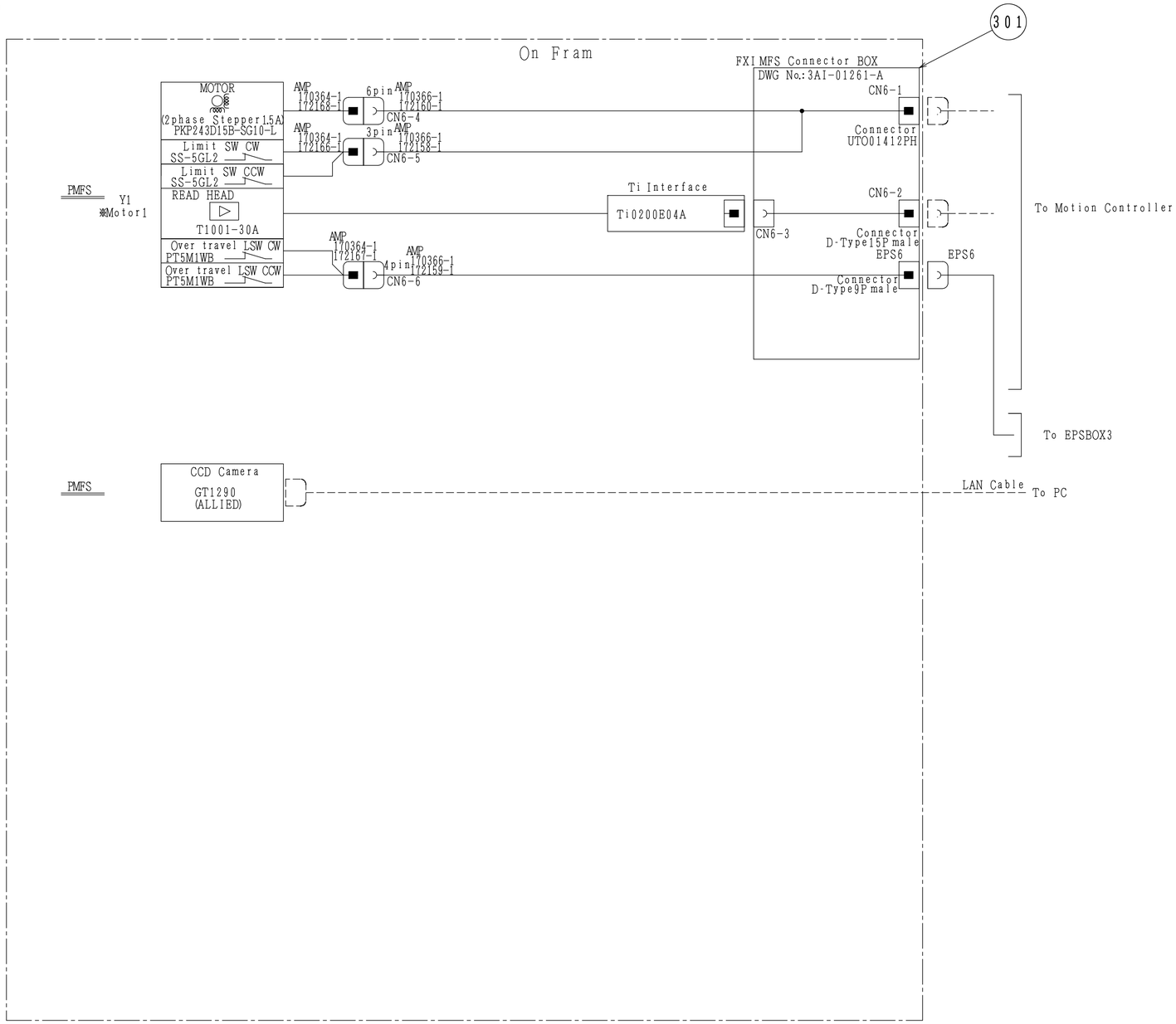

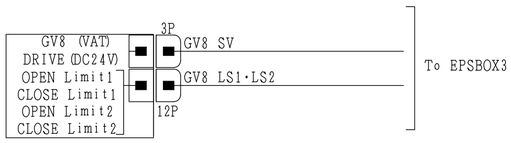

Motor Connector pin arrangements
CN6-1
(Receptacle UTO01412PH)

Pin	Description
A	Not used
B	Motor Phase A+
C	Motor Phase A-
D	Motor Phase B+
E	Motor Phase B-
F	Shield
G	End Switch '+' direction
H	End Switch '-' direction
J	Not used
K	Not used
L	24V Limit Supply
M	0V

Encorder Connector pin arrangements
CN6-2
(Receptacle 15-way D-type subminiature connector)

Pin	Description
1	Not used
2	Encoder Power (0V)
3	Not used
4	ChC-
5	ChB-
6	ChA-
7	Encoder Power (5V)
8	Encoder Power (5V)
9	Encoder Power (0V)
10	Not used
11	Not used
12	ChC+
13	ChB+
14	ChA+
15	Not used

Gate valve pin arrangements
Limit switch 12PConnector

Pin	Description
A	LS1 OPEN Limit Return
B	LS1 OPEN Limit Supply (DC24V)
C	Not used
D	Not used
E	LS1 CLOSE Limit Supply (DC24V)
F	LS1 CLOSE Limit Return
G	LS2 OPEN Limit Return
H	LS2 OPEN Limit Supply (DC24V)
J	Not used
K	Not used
L	LS2 CLOSE Limit Supply (DC24V)
M	LS2 CLOSE Limit Return

Solenoid Valve 3PConnector

Pin	Description
1	DC24V Supply
2	0V
3	Not used

Overtravel limits pin arrangements
EPS6
Limit switch D-type9 Connector

Pin	Description
1	Motor1 Negative Limit
2	Motor1 Negative Limit Return
3	Motor1 Positive Limit
4	Motor1 Positive Limit Return
5	Motor2 Negative Limit
6	Motor2 Negative Limit Return
7	Motor2 Positive Limit
8	Motor2 Positive Limit Return
9	Not used

※Motor1, 2

*---:Outside the specification

Z	Y	X	W	V	U	T	S	R	Q	P	O	N	M	L	K	J	I	H	G	F	E	D	C	B	A	No.	Symbol	DWG No.	Item	Parts number	Manufac.	Remarks
																									0	1		3AI-01261-A	MFS Connector BOX Assembly			
																									1	301						

REV	MODIFICATION	DATE	MOD/BY
4			
3			
2			
1			

CHECKED BY: OKA 16/Nov./2015
DESIGNED BY: D.SUZUKI 16/Nov./2015
DRAWN BY: D.SUZUKI 16/Nov./2015
RELEASED BY:

TOYAMA CO.,LTD

TITLE: MFS Connection Diagram1

SH No. 1/1

DWG No. 2AP-00865 0 PCS

1

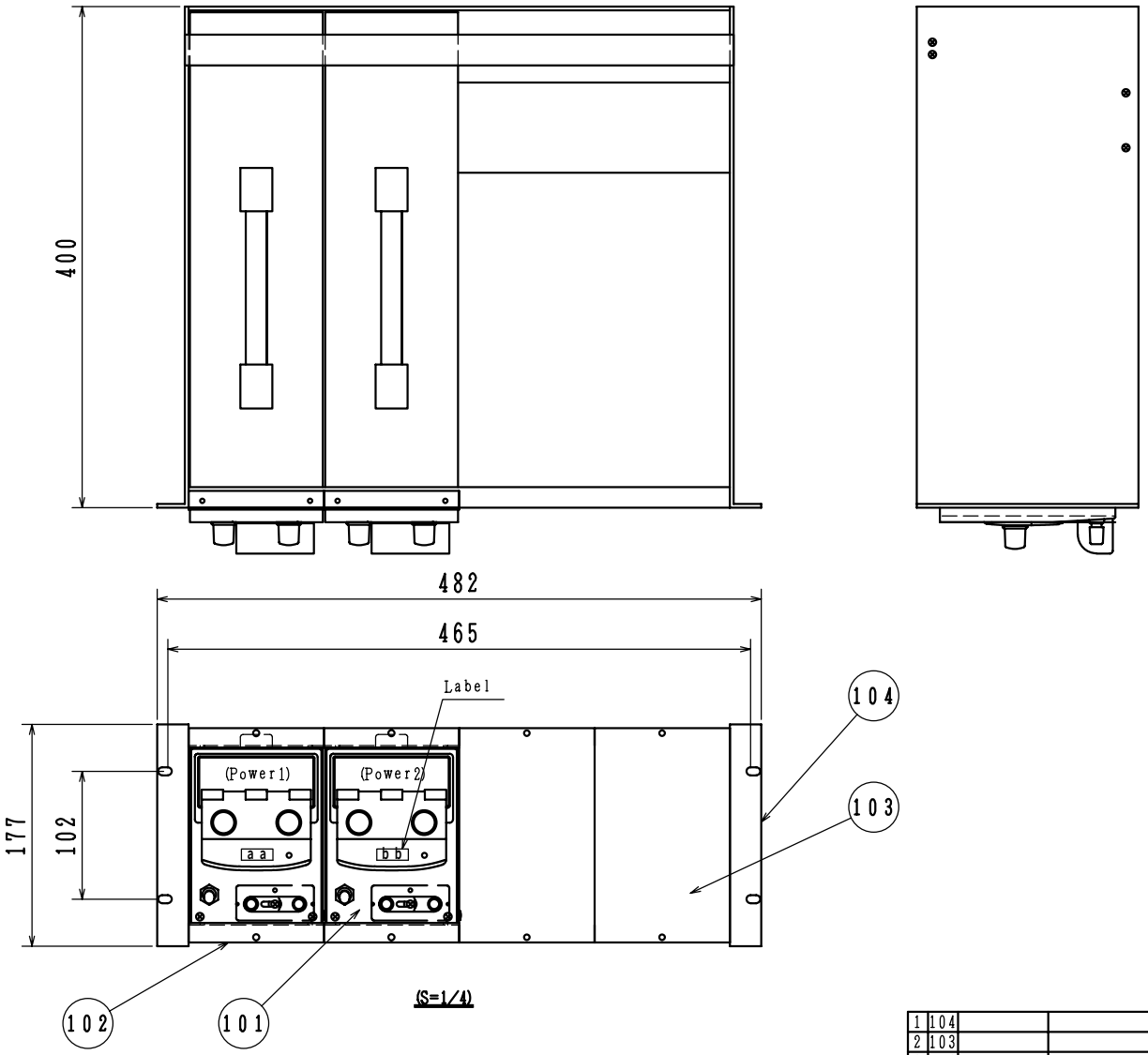

No.	Symbol	DWG No.	Item	Parts number	Manufac.	Remarks
1	104		Rack mount frame	RMF4	KIKUSUIDENSHI	
2	103		Blank panel	BP4	KIKUSUIDENSHI	
2	102		Bracket	B42	KIKUSUIDENSHI	
2	101		DC Power supply	PAN35-5A-120V	KIKUSUIDENSHI	
0	1		Assembly			

Z Y X W V U T S R Q P O N M L K J I H G F E D C B A

REV	MODIFICATION	DATE	MOD/BY
4			
3			
2			
1			

CHECKED BY	DESIGNED BY	DRAWN BY	RELEASED BY
OKA	Maezeki	Maezeki	
19/Nov./2015	18/Nov./2015	18/Nov./2015	

TITLE: DC Power supply unit

TOYAMA CO.,LTD

SH No. 1/1

DWG No. 3AI-01262 0

PCS

1

On the component

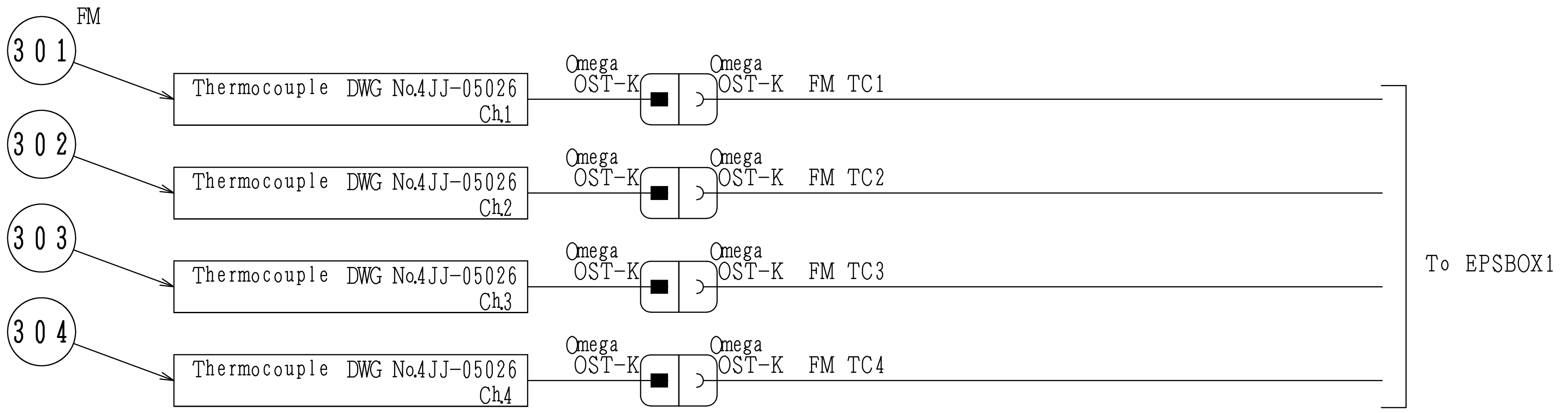

*−−−:Outside the specification

0 1			Assembly		参考図番:2AP-00865
Z Y X W V U T S R Q P O N M L K J I H G F E D C B A No.	Symbol	DWG No.	Item	Parts number	Manufac. / Remarks

REV	MODIFICATION	DATE	MOD/BY
4			
3			
2			
1			

CHECKED BY	DESIGNED BY	DRAWN BY	RELEASED BY
OKA	D.SUZUKI	D.SUZUKI	
16/Nov./2015	16/Nov./2015	16/Nov./2015	

TITLE
FM
Connection Diagram1

TOYAMA CO.,LTD.

SH No. 1/1

DWG No. 3AP-03971 0

PCS

FXI Beamline

REV. 2015.11.17

To EPS.BOX1 PLC I/Olist

		IN	OUT	Thermocouple	
First FM	Thermocouple 1			1	EPS BOX1
	Thermocouple 2			1	
	Thermocouple 3			1	
	Thermocouple 4			1	
GV1	DC24V Actuator Supply		1		
	OPEN limit 1	1			
	CLOSE limit 1	1			
	OPEN limit 2	1			
	CLOSE limit 2	1			
Collimating Mirror	Y1 Axis + Overtravel limit	1			
	Y1 Axis − Overtravel limit	1			
	Y2 Axis + Overtravel limit	1			
	Y2 Axis − Overtravel limit	1			
	Y3 Axis + Overtravel limit	1			
	Y3 Axis − Overtravel limit	1			
	X1 Axis + Overtravel limit	1			
	X1 Axis − Overtravel limit	1			
	X2 Axis + Overtravel limit	1			
	X2 Axis − Overtravel limit	1			
	X1 Axis Motor Thermocouple			1	
	X2 Axis Motor Thermocouple			1	
	Mirror cooling Thermocouple1			1	
	Mirror cooling Thermocouple2			1	
	Compton Shield			1	
	Disaster Mask			1	
	Spare1			1	
	Spare2			1	
GV2	DC24V Actuator Supply		1		
	OPEN limit 1	1			
	CLOSE limit 1	1			
	OPEN limit 2	1			
	CLOSE limit 2	1			
	Total I/O ・Thermocouple	18	2	12	

To EPS.BOX2 PLC I/Olist

REV. 2015.11.17

		IN	OUT	Thermocouple	
GV2	DC24V Actuator Supply		1		
	OPEN limit 1	1			
	CLOSE limit 1	1			
	OPEN limit 2	1			
	CLOSE limit 2	1			
GV3	DC24V Actuator Supply		1		
	OPEN limit 1	1			
	CLOSE limit 1	1			
	OPEN limit 2	1			
	CLOSE limit 2	1			
	Y1 Axis + Overtravel limit	1			
WPFS	Y1 Axis − Overtravel limit	1			
	Thermocouple 1			1	
	Thermocouple 1			1	
WSTPM	Thermocouple 2			1	
	Thermocouple 3			1	
	Thermocouple 4			1	
PBSL	UP Axis + Overtravel limit	1			
	UP Axis − Overtravel limit	1			
	LOW Axis + Overtravel limit	1			
	LOW Axis − Overtravel limit	1			
	LEFT Axis + Overtravel limit	1			
	LEFT Axis − Overtravel limit	1			
	RIGHT Axis + Overtravel limit	1			EPS BOX2
	RIGHT Axis − Overtravel limit	1			
	UP Thermocouple 1			1	
	LOW Thermocouple 2			1	
	LEFT Thermocouple1			1	
	RIGHT Thermocouple 2			1	
GV4	DC24V Actuator Supply		1		
	OPEN limit 1	1			
	CLOSE limit 1	1			
	OPEN limit 2	1			
	CLOSE limit 2	1			
DCM	ΔY2 Axis Motor Thermocouple			1	
	Δθ2 Axis Motor Thermocouple			1	
	Δφ2 Motor Thermocouple			1	
	Θ Axis CW Overtravel limit	1			
	Θ Axis CCW Overtravel limit	1			
	ΔY2 Axis CW Overtravel limit	1			
	ΔY2 Axis CCW Overtravel limit	1			
	Δθ2 Axis CW Overtravel limit	1			
	Δθ2 Axis CCW Overtravel limit	1			
	Δφ2 Axis CW Overtravel limit	1			
	Δφ2 Axis CCW Overtravel limit	1			
	1st Crystal Holder Thermocouple1			1	
	1st Crystal Holder Thermocouple2			1	
	2nd Crystal Holder Thermocouple1			1	
	2nd Crystal Holder Thermocouple2			1	
	Compton sgield			1	
	Spare1			1	
	Spare2			1	
	1st Crystal Holder Heater PlateThermocouple1			1	
	2nd Crystal Holder Heater PlateThermocouple1			1	
	Door Swith	1			
	Total I/O ・Thermocouple	31	3	21	

To EPS.BOX3 PLC I/Olist

REV. 2015.11.17

		IN	OUT	Thermocouple	
GV5	DC24V Actuator Supply		1		
	OPEN limit1	1			
	CLOSE limit1	1			
	OPEN limit2	1			
	CLOSE limit2	1			
PMFS	Y1 Axis + Overtravel limit	1			
	Y1 Axis − Overtravel limit	1			
PMBT	Thermocouple 1			1	
SBS-Ⅲ	Thermocouple 2			1	
GV6	DC24V Actuator Supply		1		
	OPEN limit1	1			
	CLOSE limit1	1			
	OPEN limit2	1			
	CLOSE limit2	1			
	Y1 Axis CW Overtravel limit	1			
Toroidal	Y1 Axis CCW Overtravel limit	1			EPS BOX3
Mirror	Y2 Axis CW Overtravel limit	1			
	Y2 Axis CCW Overtravel limit	1			
	Y3 Axis CW Overtravel limit	1			
	Y3 Axis CCW Overtravel limit	1			
	X1 Axis CW Overtravel limit	1			
	X1 Axis CCW Overtravel limit	1			
	X2 Axis CW Overtravel limit	1			
	X2 Axis CCW Overtravel limit	1			
	X1 Axis Motor Thermocouple			1	
	X2 Axis Motor Thermocouple			1	
	Spare1			1	
	Spare2			1	
GV7	DC24V Actuator Supply		1		
	OPEN limit1	1			
	CLOSE limit1	1			
	OPEN limit2	1			
	CLOSE limit2	1			
MFS	Y1 Axis + Overtravel limit	1			
	Y1 Axis − Overtravel limit	1			
GV8	DC24V Actuator Supply		1		
	OPEN limit1	1			
	CLOSE limit1	1			
	OPEN limit2	1			
	CLOSE limit2	1			
	Total I/O・Thermocouple	30	4	6	

List of Commercial parts for FXI

2015/11/20 Rev0

		Part	Q'ty	Supplier	Part ID	USE	Note	UL corresponden
UP DPS	Pump	Ion pump	1	Gamma Vacuum	200L-DI-8S-SC-110-N			
	Gauge	Pirani	1	MKS	103170024SH(2 3/4"CF)			
		CCS	1	MKS	104220006			
	Valve	All Metal Angle Valve	1	VAT	54132-GE02			
FM	Air	Thermocouple(K-type)	4	TOYAMA	4JJ-05026			
DOWN DPS	Pump	Ion pump	1	Gamma Vacuum	200L-DI-8S-SC-110-N			
	Gauge	Pirani	1	MKS	103170024SH(2 3/4"CF)			
		CCS	1	MKS	104220006			
	Valve	All Metal Angle Valve	1	VAT	54132-GE02			
Collimating Mirror	Air	Motor	3	Oriental Motor	PK264D14B-A1	Y axis		
		Limit Switch	6	Omron	SS-5GL2	Y axis		
		High precision Limit Switch	6	Metrol	PT5M1WB	Y axis		
		Encoder	3	Renishaw	T1001-30A+Ti2000E04A	Y axis		
		Indicator Connector BOX	1	TOYAMA	3AI-01144			
	Vacuum	Motor	2	Phytron	VSS57.200.1,2-E-UHVS-KTC	X axis		
		Thermocouple	2					
		Thermocouple(K-type)	6	VYTEK	312AC-KAP-TCK	Compton shield,Mask,Mirror,Spare		
		High precision Limit Switch	4	Metrol	PT5M3B-01-02	X axis		
		Encoder	2	Renishaw	T1601-50M+Ti2000E04A	X axis		
		Load cell	1	Toyosokki	TCLB-500L-M	Bend		
		Piezo	1	P·I	P235K051	Bend		
	Pump	Ion pump	1	Gamma Vacuum	600LX-DI-8P-SC-110-N			
	Gauge	Pirani	1	MKS	103170024SH(2 3/4"CF)			
		CCS	1	MKS	104220006			
	Valve	All Metal Angle Valve	1	VAT	54132-GE02			
	Burst Disk	Burst Disk	1	MDC	BDA-275-ASME(420033)			
Pumping Station	Pump	Ion pump	1	Gamma Vacuum	200L-DI-8S-SC-110-N			
	Gauge	Pirani	1	MKS	103170024SH(2 3/4"CF)			
		CCS	1	MKS	104220006			
	Valve	All Metal Angle Valve	1	VAT	54132-GE02			
WPFS	Air	Motor	1	Oriental Motor	PKP243D15B-SG10-L	Y axis		
		Limit Switch	2	Omron	SS-5GL2	Y axis		
		High precision Limit Switch	2	Metrol	PT5M1WB	Y axis		
		CCD Camera	1	ALLIED	GT1290			
	Vacuum	Thermocouple(K-type)	1	VYTEK	312AC-KAP-TCK			
	Pump	Ion pump	1	Gamma Vacuum	200L-DI-8S-SC-110-N			
	Gauge	Pirani	1	MKS	103170024SH(2 3/4"CF)			
		CCS	1	MKS	104220006			
	Valve	All Metal Angle Valve	1	VAT	54132-GE02			
WSTPM	Air	Thermocouple(K-type)	4	TOYAMA	4JJ-05026			
PBSL	Air	Motor	4	Oriental Motor	PKP243D15B-SG10-L	Up,Low,Left,Right		
		Limit Switch	8	Omron	SS-5GL2	Up,Low,Left,Right		
		Encoder	4	Renishaw	T1001-30A+Ti0200E04A	Up,Low,Left,Right		
		High precision Limit Switch	4	Metrol	PT5M1WB	Up,Low,Left,Right		
	Vacuum	Thermocouple(K-type)	4	VYTEK	312AC-KAP-TCK			
	Pump	Ion pump	1	Gamma Vacuum	200L-DI-8S-SC-110-N			
	Gauge	Pirani	1	MKS	103170024SH(2 3/4"CF)			
		CCS	1	MKS	104220006			
	Valve	All Metal Angle Valve	1	VAT	54132-GE02			

DCM	Air	Motor	4	Oriental Motor	PK296DB+AB090-050-52-P2	Y axis		
		Motor	1	Oriental Motor	PK264B2-SG10	X axis		
		Motor	1	Oriental Motor	PK296DB	θ axis		
		Limit Switch	8	Omron	D5A-3200	Y axis		
		Limit Switch	2	Omron	SS-5GL2	X axis		
		Limit Switch	2	Metrol	CS067B	θ axis		
		High precision Limit Switch	2	Metrol	CS067B	θ axis		
		High precision Limit Switch	2	Metrol	PT5M1WB	X axis		
		Encoder	2	Renishaw	T2001-30A+Ti0400E04A	θ axis		
		Averaging unit	1	Renishaw	DSi-QUM04	θ axis		
		Potentiometer	1	Midori Sokki	LP50F	X axis		
		Temperature Control BOX	1	TOYAMA	3AI-01180			
		DC Power supply unit	1	TOYAMA	3AI-01262			×
		Door Switch	1	Omron	D4C-2232			
		DC 5V Power	1	COSEL	PBA10F-5		In DCM Connector BOX	○
		AC Inlet	1	MISUMI	ID-0342-S			○
		Cryocooler		Suzuki-shokan			3phase AC208V 30A	
		Cryocooler(Heater)		Suzuki-shokan			AC208V 20A	
	Vacuum	Motor	3	Phytron	VSS42.200.1,2-E-UHVS-KTC	ΔY2 axis,Δθ2 axis,Δφ2 axis		
		Thermocouple	3					
		Limit Switch	6	Metrol	BP060BZ-02-05GN	ΔY2 axis,Δθ2 axis,Δφ2 axis		
		Encoder	2	Renishaw	T2651-50M+Ti4000E04A	Δφ2 axis,Δθ2 axis		
		Encoder	1	Renishaw	T1601-50M+Ti0400E04A	ΔY2 axis		
		Thermocouple(K-type)	11	VYTEK	312AC-KAP-TCK	1st CH,2st CH,Compton shield,Spare,1st CHHP,2st CHHP	CH=Crystal Holder CHHP=Crystal Holder Heater Plate	
		Kapton Heater	2	MINCO	HK5164R78.4L12	1st CHHP,2st CHHP	28V 10W	
		Piezo	2	P·I	P845K096			
	Pump	Ion pump	1	Gamma Vacuum	600LX-DI-8S-SC-110-N			
	Gauge	Pirani	1	MKS	103170024SH(2 3/4"CF)			
		CCS	1	MKS	104220006			
	Valve	All Metal Angle Valve	1	VAT	54132-GE02			
	Burst Disk	Burst Disk	1	MDC	BDA-275-ASME(420033)			
	LN2 Chamber	Burst Disk	1	MDC	BDA-275-ASME(420033)			
		Pirani	1	MKS	103170024SH(2 3/4"CF)			
		All Metal Angle Valve	1	VAT	54132-GE02			
PMFS	Air	Motor	1	Oriental Motor	PKP243D15B-SG10-L	Y axis		
		Limit Switch	2	Omron	SS-5GL2	Y axis		
		High precision Limit Switch	2	Metrol	PT5M1WB	Y axis		
		CCD Camera	1	ALLIED	GT1290			
	Vacuum	Thermocouple(K-type)	1	VYTEK	312AC-KAP-TCK			
	Pump	Ion pump	1	Gamma Vacuum	200L-DI-8S-SC-110-N			
	Gauge	Pirani	1	MKS	103170024SH(2 3/4"CF)			
		CCS	1	MKS	104220006			
	Valve	All Metal Angle Valve	1	VAT	54132-GE02			
Toroidal Mirror	Air	Motor	3	Oriental Motor	PK264D14B-A1	Y axis		
		Limit Switch	3	Omron	SS-5GL2	Y axis		
		High precision Limit Switch	3	Metrol	PT5M1WB	Y axis		
		Encoder	3	Renishaw	T1001-30A+Ti2000E04A	Y axis		
		Indicator Connector BOX	1	TOYAMA	3AI-01144			
	Vacuum	Motor	2	Phytron	VSS57.200.1,2-E-UHVS-KTC	X axis		
		Thermocouple(K-type)	2					
		High precision Limit Switch	2	Metrol	GN-PT5M3B-01-02	X axis		
		Encoder	2	Renishaw	T1601-50M+Ti2000E04A	X axis		
		Thermocouple(K-type)	2	VYTEK	312AC-KAP-TCK	Spare		
		Load cell	1	TOYOSOKKI	TCLB-500L-M	Bend		
		Piezo	1	P·I	P235K051	Bend		
	Pump	Ion pump	1	Gamma Vacuum	600LX-DI-8P-SC-110-N			
	Gauge	Pirani	1	MKS	103170024SH(2 3/4"CF)			
		CCS	1	MKS	104220006			
	Valve	All Metal Angle Valve	1	VAT	54132-GE02			

MFS	Air	Motor	1	Oriental Motor	PKP243D15B-SG10-L	Y axis		
		Limit Switch	2	Omron	SS-5GL2	Y axis		
		High precision Limit Switch	2	Metrol	PT5M1WB	Y axis		
		Encoder	1	Renishaw	T1001-30A+Ti0200E04A	Y axis		
		CCD Camera	1	ALLIED	GT1290			
	Pump	Ion pump	1	Gamma Vacuum	200L-DI-8S-SC-110-N			
	Gauge	Pirani	1	MKS	103170024SH(2 3/4"CF)			
		CCS	1	MKS	104220006			
	Valve	All Metal Angle Valve	1	VAT	54132-GE02			
6-way port1	Gauge	Pirani	1	MKS	103170024SH(2 3/4"CF)			
		CCS	1	MKS	104220006			
	Valve	All Metal Angle Valve	1	VAT	54132-GE02			
Ion pump station	Pump	Ion pump	3	Gamma Vacuum	200L-DI-6D-SC-N-N			
6-way port2	Gauge	Pirani	1	MKS	103170024SH(2 3/4"CF)			
		CCS	1	MKS	104220006			
	Valve	All Metal Angle Valve	1	VAT	54132-GE02			
Gate Valve	Valve	Gate Valve	3	VAT	48240-CE44-X		X=DL.S(24VDC)	
			5	VAT	10840-CE44-X		X=DL.S(24VDC)	
Be Window		FXI BL ICF152 Be Window	1	TOYAMA	3AB-00137			
Heater		Siegel Wire(white)		KURABE	REH-SG-E 2sq white			×
		Siegel Wire(green)		KURABE	REH-SG-E 2sq green			×
		Terminal block		IDEC	BNH-30W			○
		Thermocouple(E-type)		DAIKO	E sheath1.6×200L SUS316 3m			×
		Ribbon heater		SAKAGUTI	C3025202		AC200V 300W	×
		Sheath heater		SUKEGAWA	M20-2.3-8030-200-1200		AC200V 1200W	×
		Sheath heater		SUKEGAWA	M20-1.6-6060-200-600		AC200V 600W	×
		Sheath heater		OKAZAKI	H35-3000-XA0.4C200-300/70		AC200V 400W	×
Piezo controller1 (TM,CM)		Controller basic unit	1	P·I	E-500.00			×
		Interface display module	1	P·I	E-517.i3			
		HVPZT amplifiers modules	2	P·I	E-508.00			
		SGS sensor control module	1	P·I	E-509.S3			
Piezo controller2 (DCM)		Controller basic unit	1	P·I	E-500.00			×
		Interface display module	1	P·I	E-517.i3			
		LVPZT amplifiers modules	2	P·I	E-505.00			
		SGS sensor control module	1	P·I	E-509.S3			
Indicator Connector BOX 3AI-01144 (CM)		M4 Terminal block	3	IDEC	BNH-30W			○
		Indicator	1	TOYOSOKKI	DLS-5028A-3			×
		RS232C-Ethernet Converter	1	MOXA	PNES-NPORT5110-R-DIN			○
		Ac Inlet	1	MISUMI	ID-0342-S			○
		FUSE	1	SATOPARTS	F-7161-125V-1A			
Indicator Connector BOX 3AI-01144 (TM)		M4 Terminal block	3	IDEC	BNH-30W			○
		Indicator	1	TOYOSOKKI	DLS-5028A-3			×
		RS232C-Ethernet Converter	1	MOXA	PNES-NPORT5110-R-DIN			○
		Ac Inlet	1	MISUMI	ID-0342-S			○
		FUSE	1	SATOPARTS	F-7161-125V-1A			
Temperature Control BOX 3AI-001180 3AI-01262 (DCM)		AC Inlet	1	MISUMI	ID-0342-S			○
		LAMP	1	OMRON	M16-TW-T1-S			
		Temperature controller	2	RKC	FB100-5N-4*E/AN			○
		SW power supply	1	COSEL	PBA10F-24-N			
		Communication converter	1	RKC	COM-JL-1*01			
		Terminal block	1	MISUMI	RTK-10M-2P			×
		DC Power supply	2	Kikusui Denshi	PAN35-5A			×

1

NSLS-II FXI Photin Delivery System

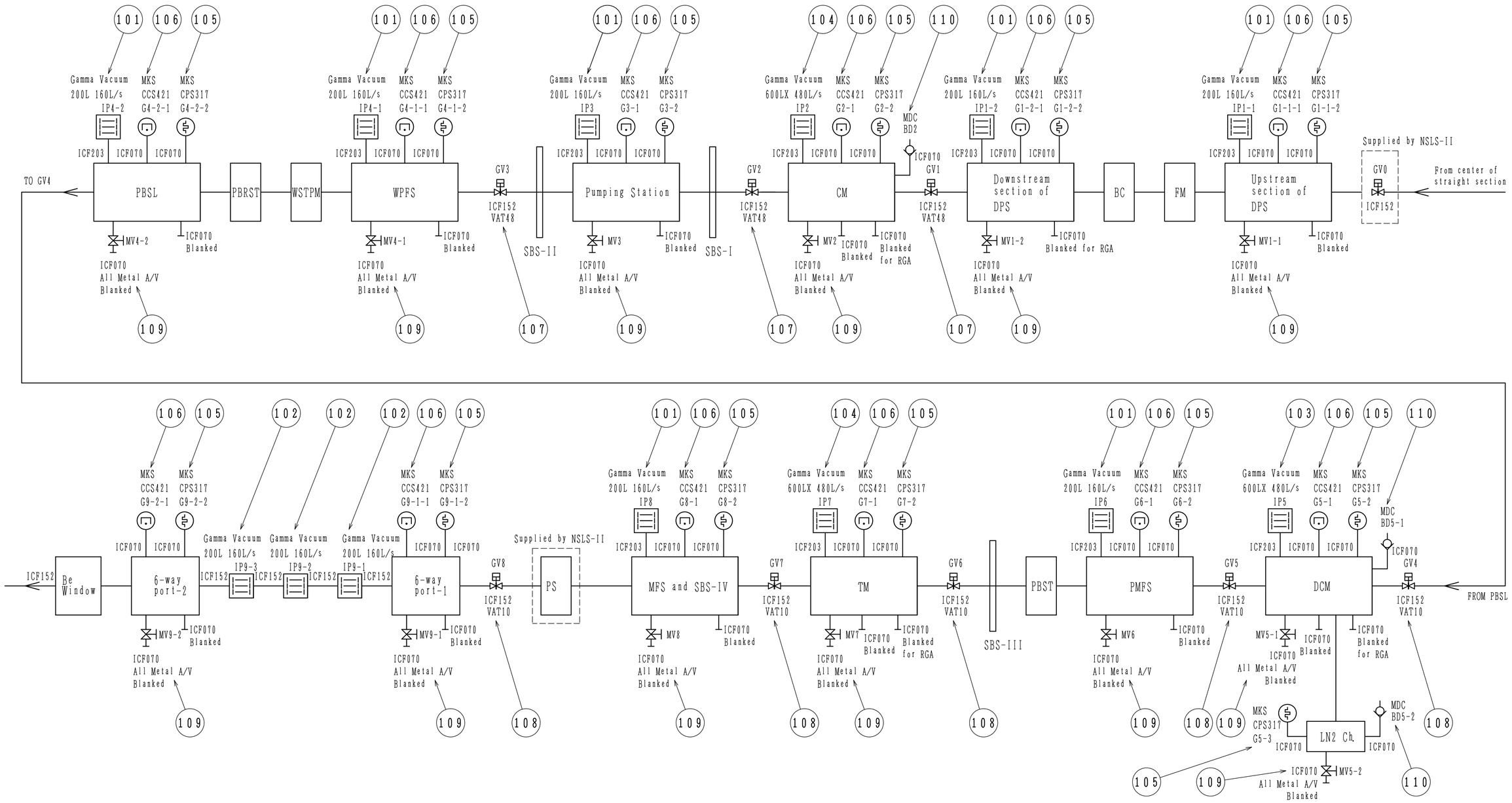

No.		Symbol	DWG No.	Item	Parts number	Manufac.	Remarks
3	110	BD2, 5-1, 5-2	Z0908106	Burst Disk 275 DS Flange	BDA-275-ASME (420033)	MDC	
13	109	MV1~9-2	Z0502303	ICF070 All Metal Angle Valve	54132-GE02	VAT	
5	108	GV4~8	Z0504232	ICF152 UHV Gate Valve	10840-CE44-X	VAT	X=DLS (24VDC)
3	107	GV1~3	Z0504233	ICF152 All Metal Gate Valve	48240-CE44-X	VAT	X=DLS (24VDC)
12	106	G1-1-1-G9-2-1	Z0306157	Cold Cathode Sensor, 422	104220006 (2 3/4"CF)	MKS	
13	105	G1-2-2-G9-2-2	Z0301033	Pirani Sensor, 317	103170024SH (2 3/4"CF)	MKS	
2	104	IP2, IP7	Z0408221	ION PUMP 600LX	600LX-DI-8P-SC-110-N	GAMMA VACUUM	
1	103	IP5	Z0408220	ION PUMP 600LX	600LX-DI-8S-SC-110-N	GAMMA VACUUM	
3	102	IP9-1, 9-2, 9-3	Z0408238	ION PUMP 200L	200L-DI-6D-SC-N-N	GAMMA VACUUM	
7	101	IP1-1, IP1-2, IP3, IP4-1, IP4-2, IP6, IP8	Z0408218	ION PUMP 200L	200L-DI-8S-SC-110-N	GAMMA VACUUM	
0	1			Assembly			

REV	MODIFICATION	DATE	MOD/BY
4			
3			
2			
1			

CHECKED BY	DESIGNED BY	DRAWN BY	RELEASED BY
HATANAKA	ASAITO	ASAITO	
20/NOV/2015	13/NOV/2015	13/NOV/2015	

TOYAMA CO., LTD

SH No. 1/1

TITLE: NSLS-II FXI Photon Delivery System VACUUM COMPONENTS

DWG No. 2KA-00030 0 PCS

1

NSLS-II FXI Photin Delivery System

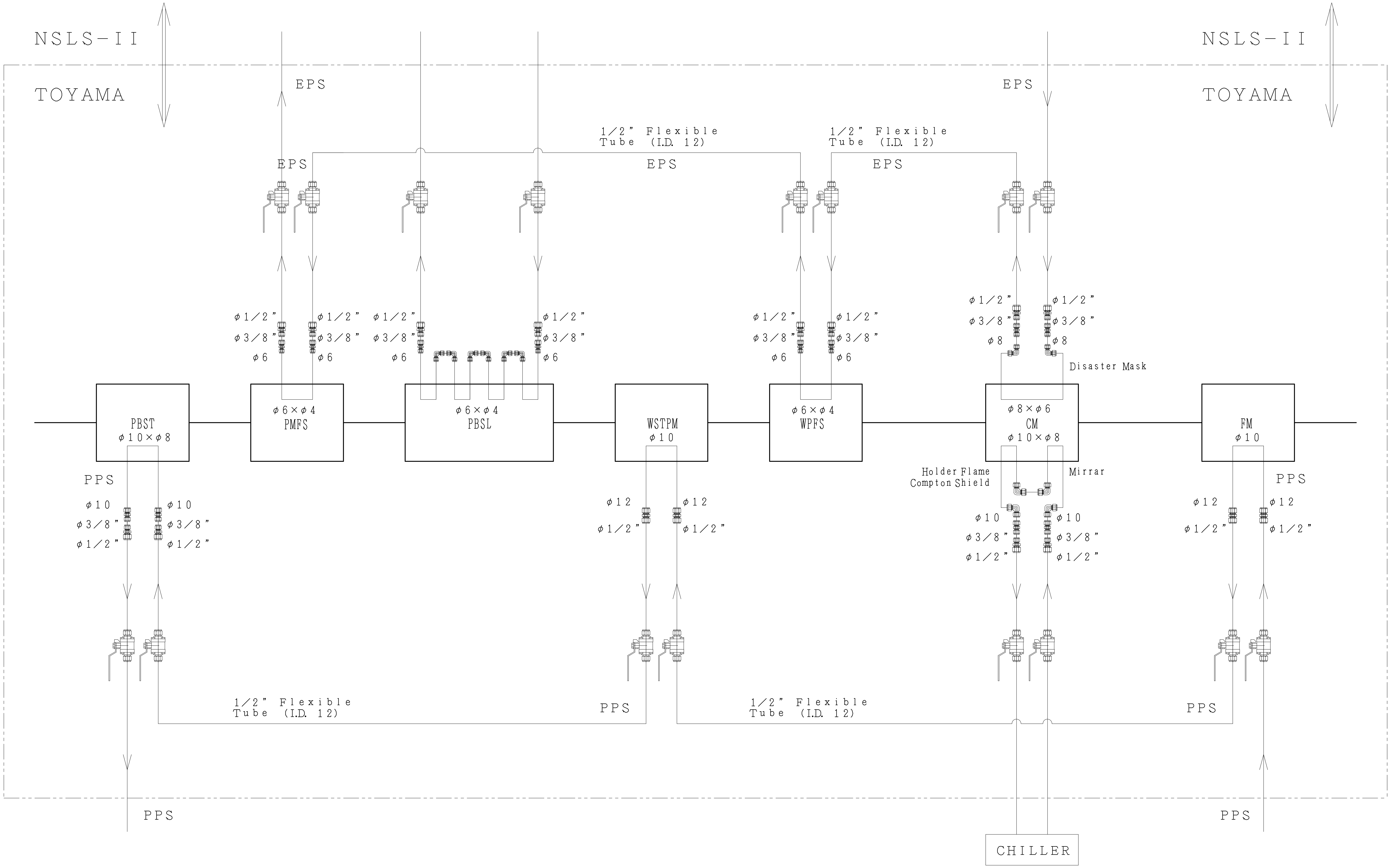

Z	Y	X	W	V	U	T	S	R	Q	P	O	N	M	L	K	J	I	H	G	F	E	D	C	B	A	No.	SymboL	DWG No.	Item	Parts number	Manufac.	Remarks
																								0	1				Assembly			

REV	MODIFICATION	DATE	MOD/BY
4			
3			
2			
1			

CHECKED BY	DESIGNED BY	DRAWN BY	RELEASED BY	TITLE
HATANAKA	ASAITO	ASAITO		NSLS-II FXI Photon Delivery System
20/NOV/2015	17/NOV/2015	17/NOV/2015		COOLING WATER FLOW DIAGRAM

TOYAMA CO., LTD.

SH No. 1/1

DWG No. 2KC-00045 0

PCS

A table of contents

I. Each Components analysis

1. Fixed mask

(1-1) Thermal analysis

a. Center

b. Upper_left

c. Upper_right

2. Collimating mirror

(2-1) Thermal analysis

a. Si surface

b. Cr surface

(2-2) Pressure vessel calculation

(2-3) Vibration analysis

3. White and pink beam fluorescent screen

(3-1) Thermal analysis

(3-2) Pressure vessel calculation

4. White beam stop and pink beam mask

(4-1) Thermal analysis

a. Lower side

b. Upper side

5. Pink beam slit

(5-1) Thermal analysis

(5-2) Pressure vessel calculation

6. Double crystal monochromator

(6-1) Thermal analysis

a. 4 keV

b. 7 keV

c. 12keV

(6-2) Pressure vessel calculation

(6-3) Vibration analysis

A table of contents

7. **Pink and monochromatic beam fluorescent screen**
   (7-1) Thermal analysis
   (7-2) Pressure vessel calculation

8. **Pink beam stop**
   (8-1) Thermal analysis

9. **Toroidal mirror**
   (9-1) Pressure vessel calculation
   (9-2) Vibration analysis

II. Whole model calculation

1. **Vacuum Calculation**

2. **Pressure drop calculation**
   (2-1) PPS
      a. Calculation Table
      b. Cooling diagram
   (2-2) EPS
      a. Calculation Table
      b. Cooling diagram
   (2-3) CM
      a. Calculation Table
      b. Cooling diagram

3. **Ray tracing**

NSLS 2 FXI Fixed Mask

Thermo-Structural analysis
- In PPS-fan condition -

- Where power envelope is centered on PPS Max Fan envelope

TOYAMA Co., Ltd

Date : Oct. 1, 2015

Created by : Tsubota

1. Scope

We have performed thermo-structural analysis of the Fixed Mask(FM) of NSLS 2 FXI beamline to evaluate the temperature, deformation, stress and strain profiles. In this report, we assumed the total absorbed power is 8870 W in PPS-fan condition. The calculation was done by using ANSYS 16.0 Mechanical.

The analysis conditions are listed in Table 1.1. These values are cited from the Technical Specification(NX-C-SPC-FXI-PDS-001). The more detail of the analysis conditions are written in Page 3.

Table 1.2 shows the analysis results. All these analysis results cleared the design criteria.(LT-C-XFD-SPC-COM-001).

	Analysis conditions	
Total Absorbed Power	**8870**	W
Distance from the source	**27.4**	m
Incident Beam	**H × V = 22.8 mm × 17.1 mm**	

Table 1.1 Analysis conditions

	Results	
Maximum Temperature	**153.6**	℃
Cooling pipe Temperature	**58.1**	℃
Surface Temperature	**53.5**	℃
Maximum Von Mises Stress	**231**	MPa
Maximum Equivalent Elastic Strain	**0.21**	%
Substrate material	**Glidcop**	

Table 1.2 Results Summary

2. Dimensional drawing

Please see the dimensional drawing of the FM in Fig. 2.1, Fig. 2.2, Fig. 2.3 and Fig. 2.4.
The analysis was done by using these simplified model

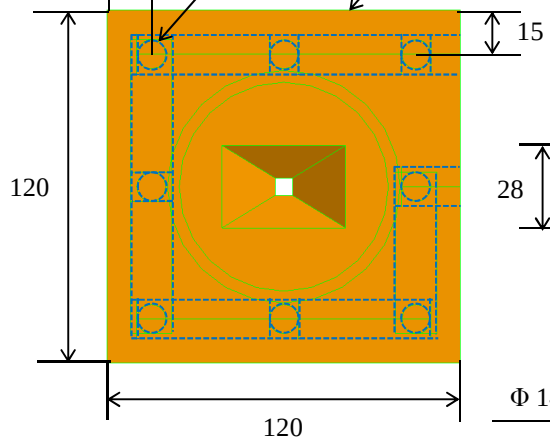

Fig. 2.1 Front view

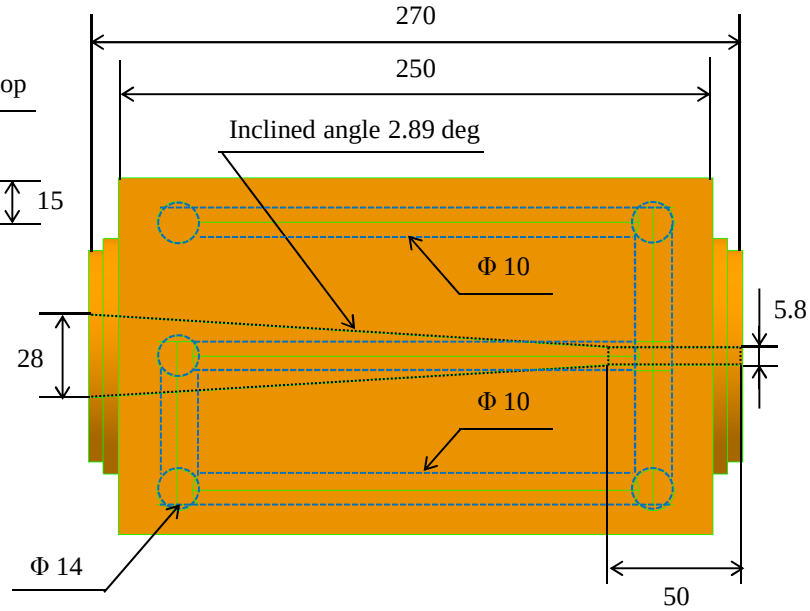

Fig. 2.2 Side view

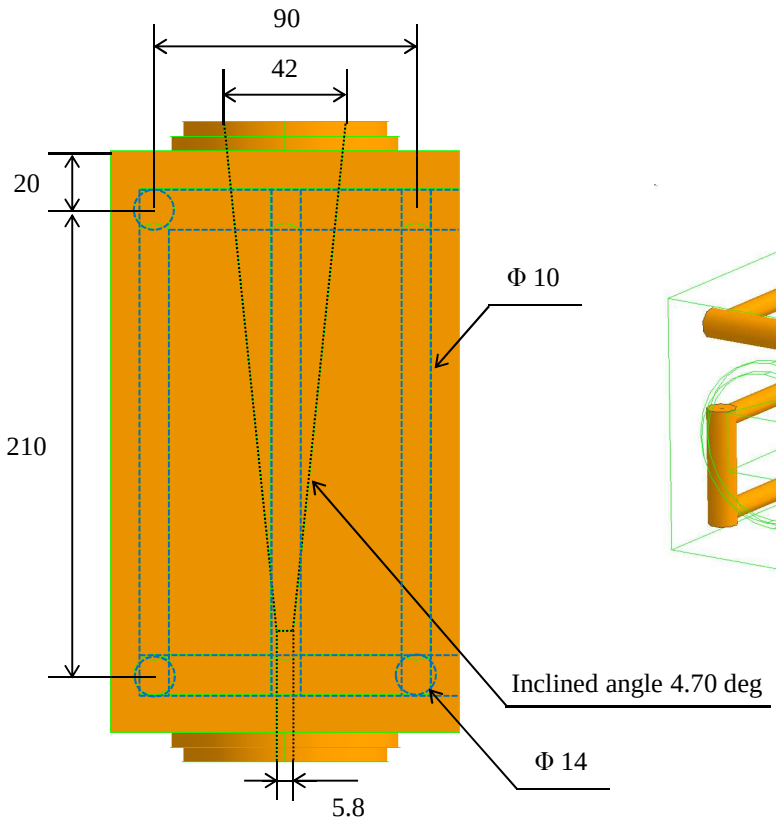

Fig. 2.3 Underside view

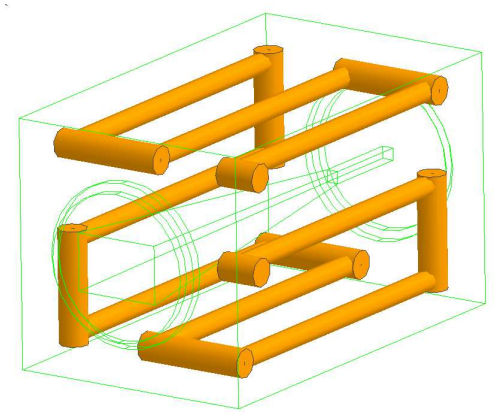

Fig. 2.4 Bird's eye view of cooling pipe

3. Boundary conditions

3.1 For thermal analysis

The green area in Fig. 3.1.1 shows the heat input area. The yellow surface in Fig. 3.1.2 shows the convection surface. Table 3.1 shows the boundary conditions for thermal analysis. We assumed the convection coefficient is enhanced by wire coil. The detail of power map applied to the fixed mask is shown in Page 5.

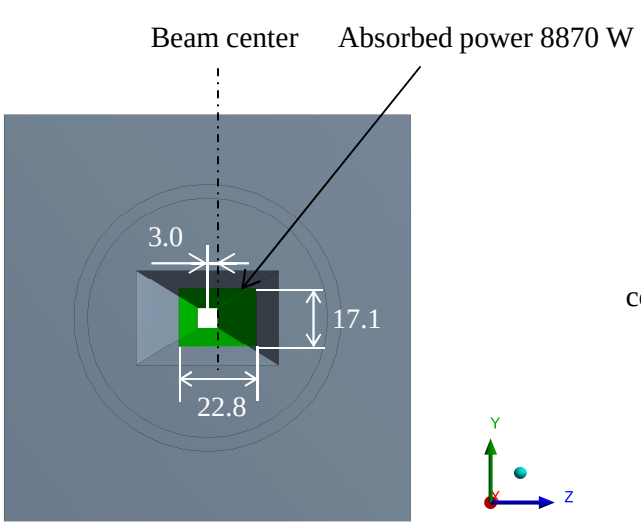

Fig. 3.1.1 Heat input area (Front view)

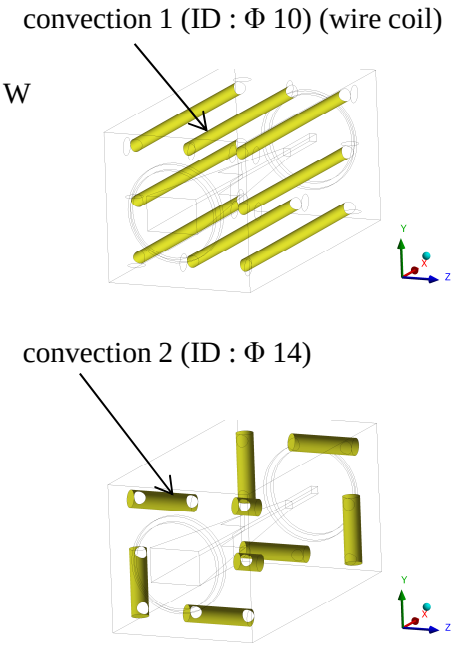

Fig. 3.1.2 convection surface

	Analysis Conditions		
Cooling Water temperature	**29.5**	℃	
Total absorbed power	**8870**	W	
Maximum heat flux	**5.62**	W/mm^2	
Distance from the source	**27.4**	m	
Beam size	**H × V = 22.8 mm × 17.1 mm**		
Pressure Loss	**0.035**	MPa	
	Convection 1 (wire coil)	Convection 2	
Convection coefficient	**12000**	**3000**	W/m^2・K
Flow rate	**6.0**	**6.0**	L/min
Flow velocity	**1.27**	**0.65**	m/s
Pipe inner diameter	**10**	**14**	mm

Table 3.1 Analysis Conditions

3. Boundary conditions

3.2 For Static structural analysis

Fig. 3.2 shows the support points. All boundary conditions for static structural analysis is shown in Table 3.2.

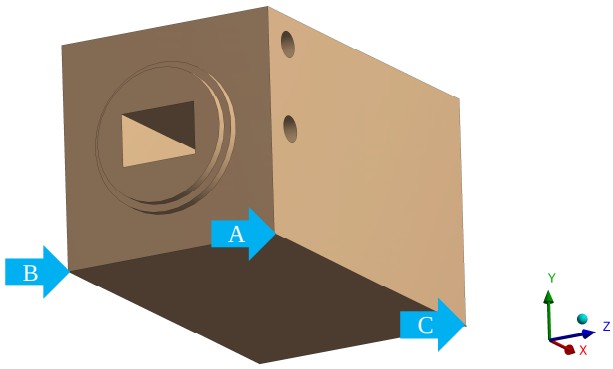

Fig. 3.2 Support Points

	Analysis Conditions	
Point A	**Fixed : X, Y, Z Axis**	
Point B	**Fixed : X, Y Axis**	**Free : Z Axis**
Point C	**Fixed : Y Axis**	**Free : X, Z Axis**
Reference temperature	**29.5**	℃

Table 3.2 Support boundary conditions

3.3 Mesh model

Fig. 3.3 shows the mesh model used for analysis.

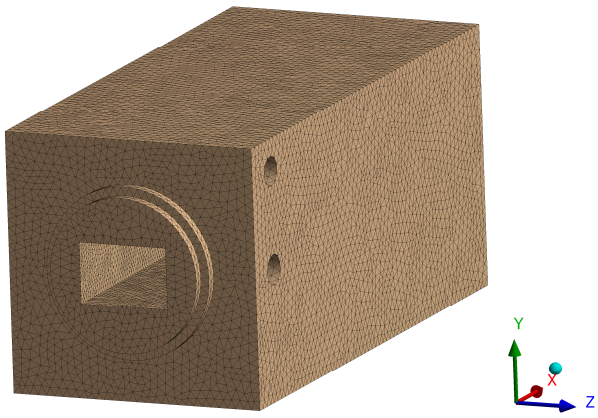

Fig. 3.3 Mesh model

3. Boundary conditions

3.4 Physical properties of materials

Table 3.4 shows the physical properties of materials used for analysis.

	Density	Young's modulus	Poisson's ratio	Thermal Expansion	Thermal Conductivity
Glidcop	8900 kg/m³	1.3E+11 Pa	0.326	1.66E-05 1/K	365 W/m･K

Table 3.4 Physical properties of materials

3.5 Power map calculation

The power map calculation was done by using *SPECTRA software. The Fig. 3.5.1 and Fig. 3.5.2 show the power map which applied for analysis. Table 3.5 show the heat balance sheet.

* T. Tanaka and H. Kitamura, J. Synchrotron Radiation 8 (2001) 1221.
Email : ztanaka@spring8.or.jp
URL : http://radiant.harima.riken.go.jp/spectra/index.html

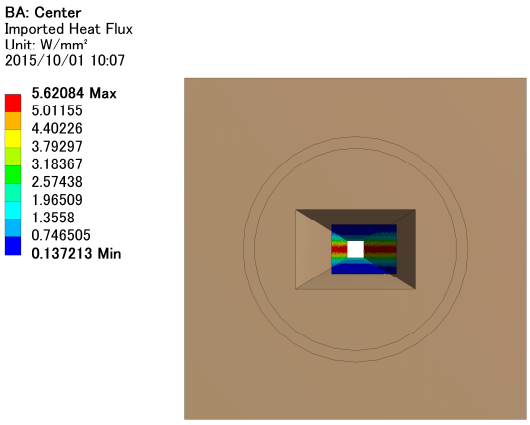

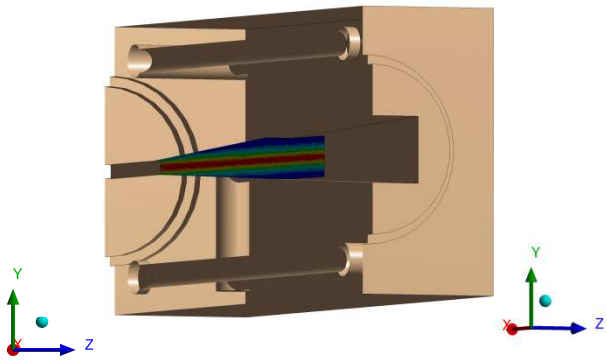

Table 3.5.1 Front view of power map

Table 3.5.2 Sectional view of power map

Total power calculation		
Total Power	**10683**	W
Total Absorbed power	**8870**	W
Total passing power	**1813**	W

Table 3.5 Heat balance sheet

4. Calculation results

4.1 Temperature profile

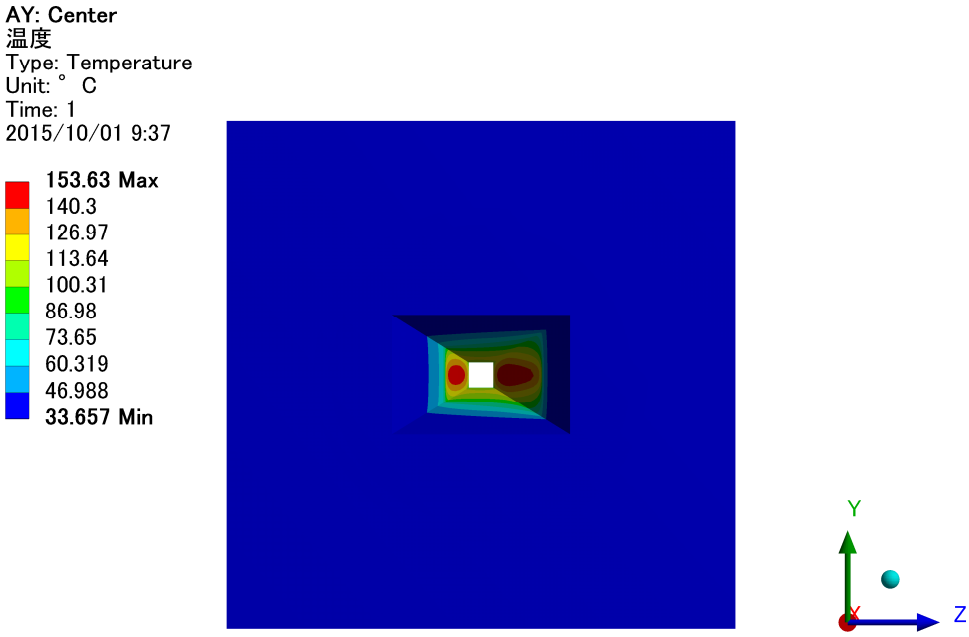

Fig. 4.1.1 Temperature profile

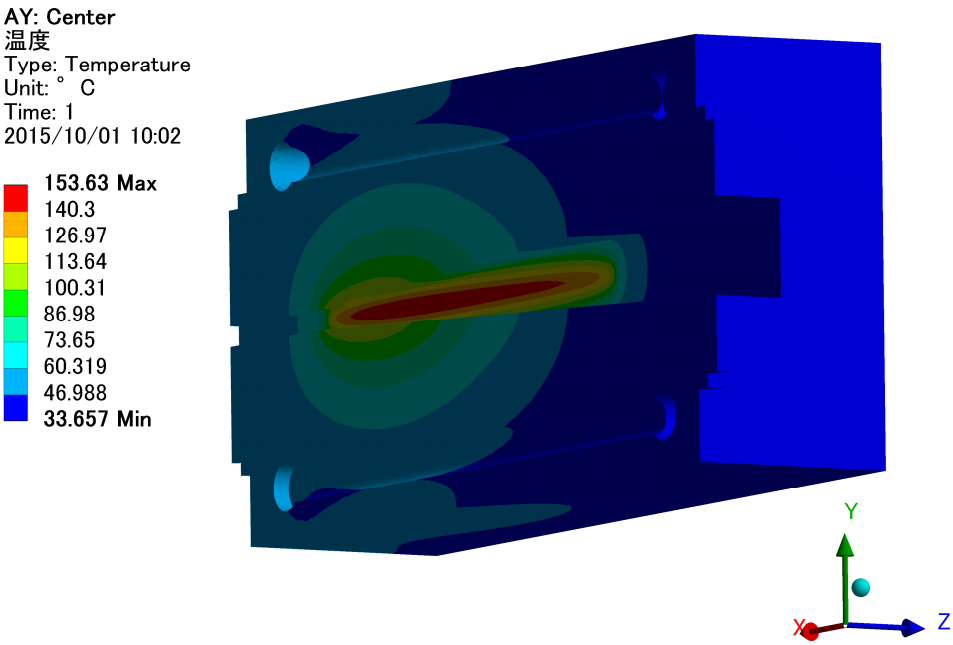

Fig. 4.1.2 Sectional view of temperature profile

4.1 Temperature profile

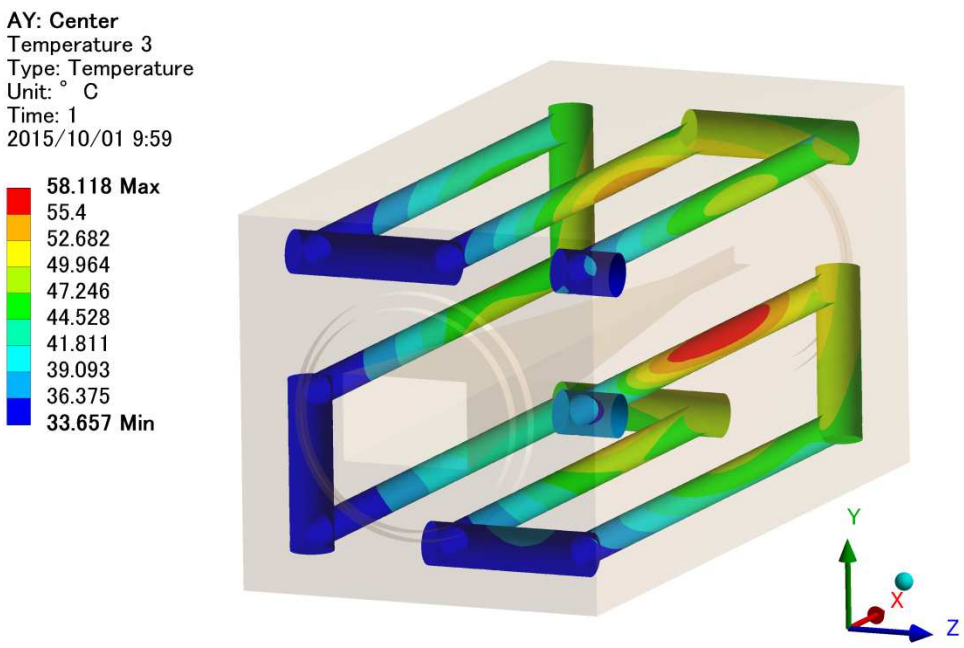

Fig. 4.1.3 Temperature profile of the cooling pipe

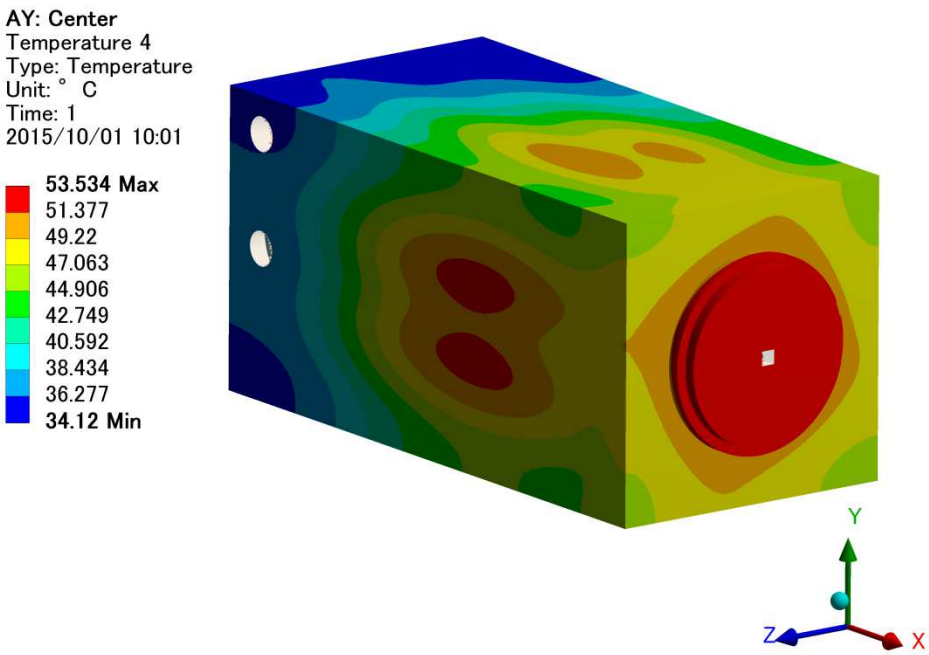

Fig. 4.1.4 Back view of surface temperature profile

4.2 Deformation profile

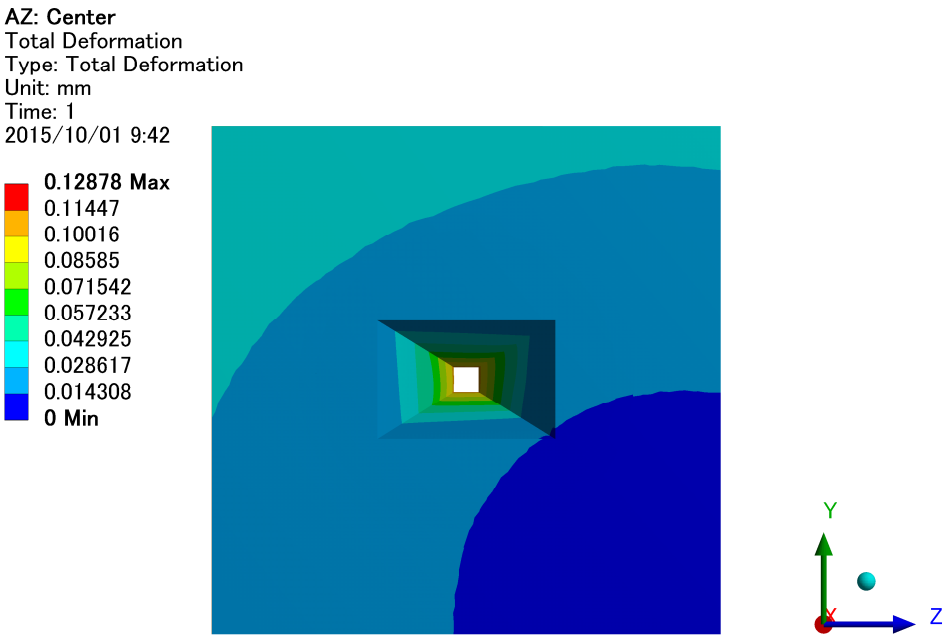

Fig. 4.2.1 Total Deformation

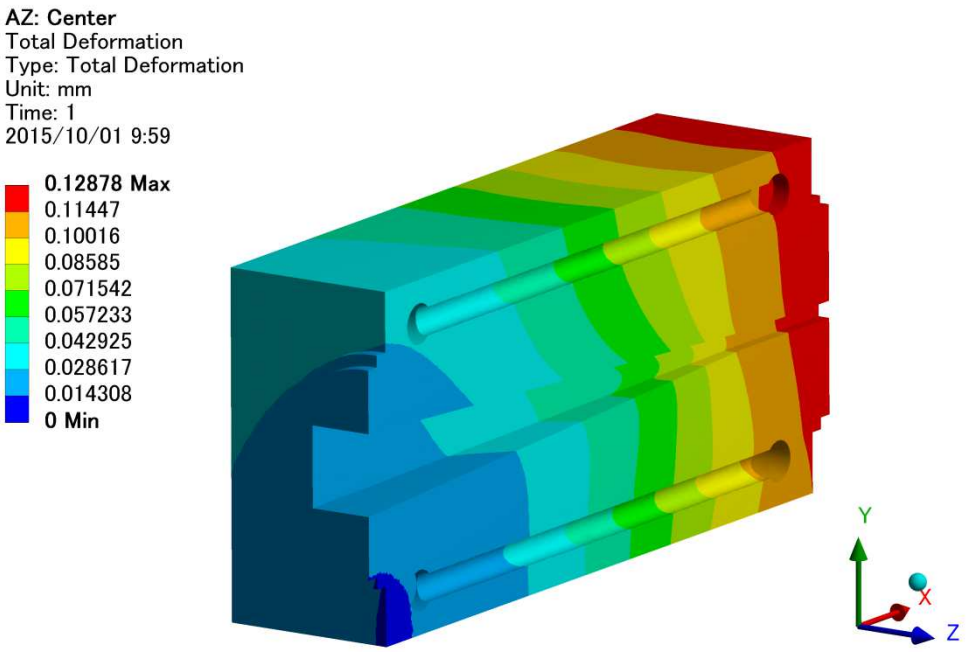

Fig. 4.2.2 Sectional view of Total Deformation

4.3 Stress profile

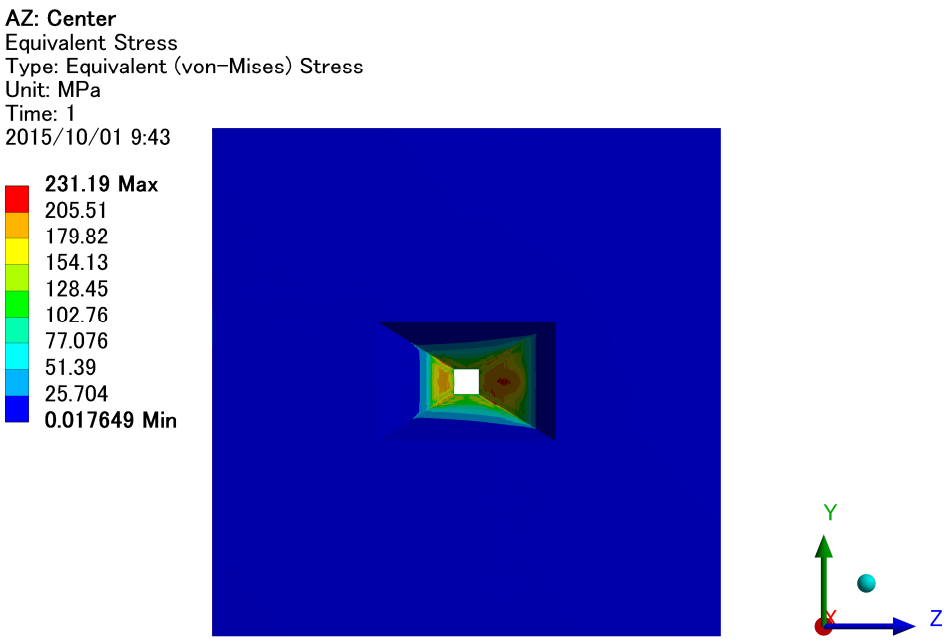

Fig. 4.3.1 Von Mises Stress

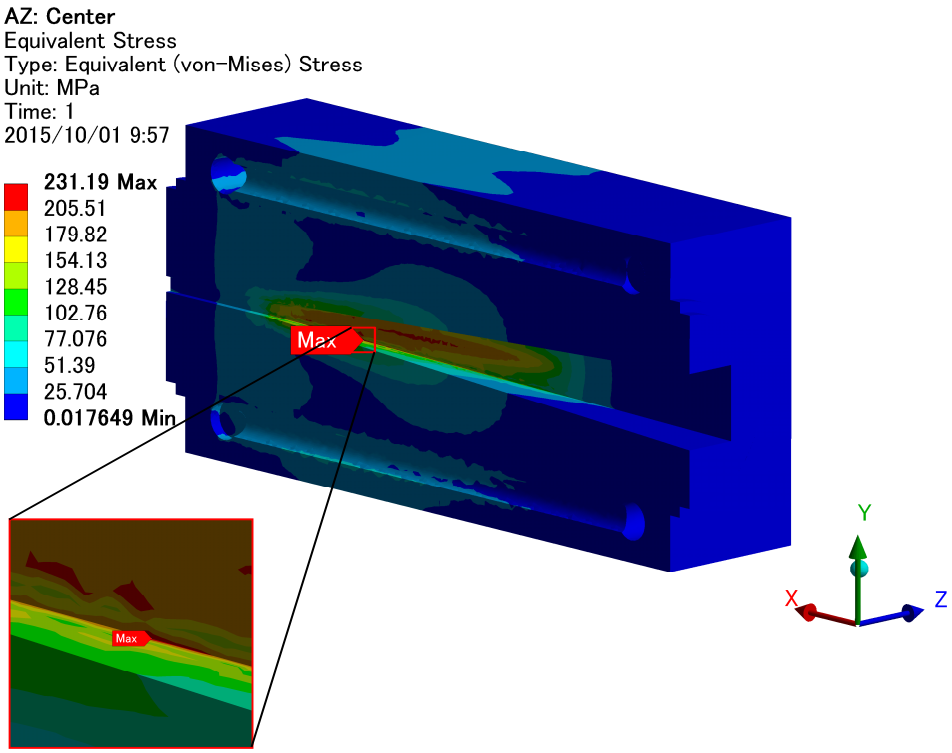

Fig. 4.3.2 Sectional view of Von Mises Stress

4.4 Elastic strain profile

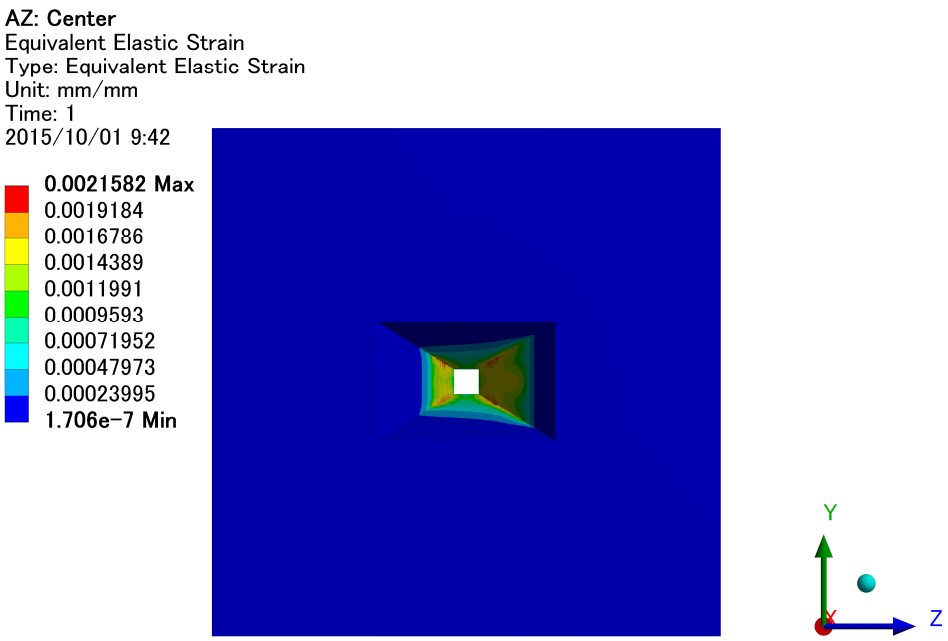

Fig. 4.4.1 Equivalent Elastic Strain

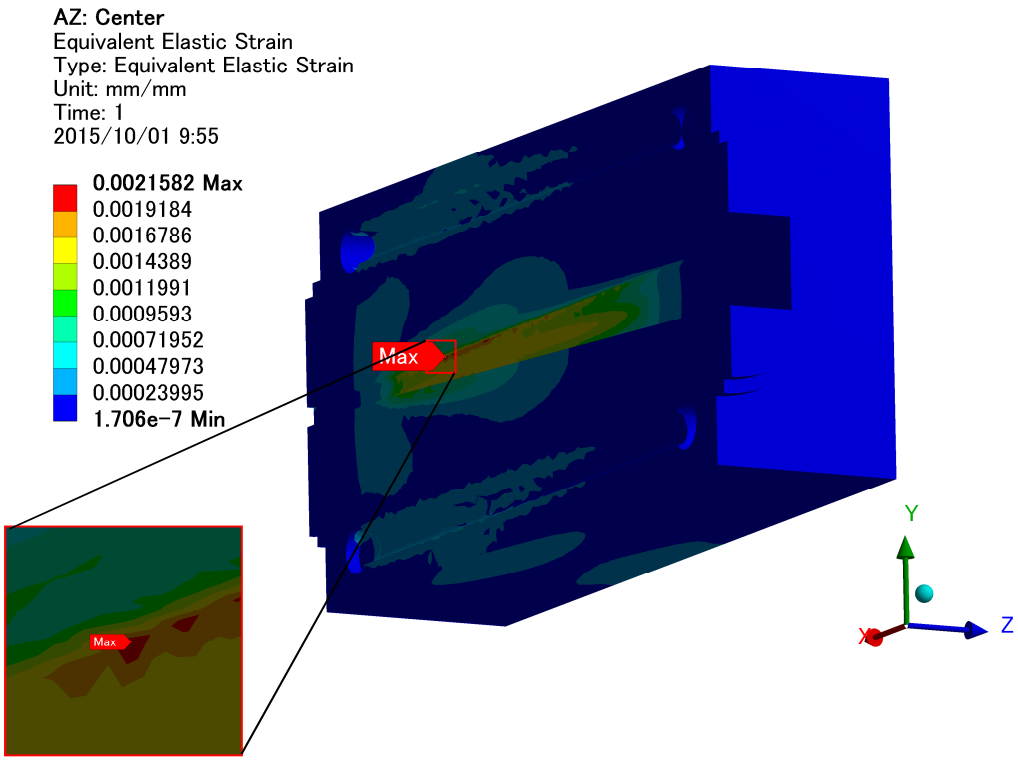

Fig. 4.4.2 Sectional view of Equivalent Elastic Strain

NSLS 2 FXI Fixed Mask

Thermo-Structural analysis
- In PPS-fan condition -

- Where power envelope is upper left edge of PPS Max Fan envelope

TOYAMA Co., Ltd

Date : Oct. 1, 2015

Created by : Tsubota

1. Scope

We have performed thermo-structural analysis of the Fixed Mask(FM) of NSLS 2 FXI beamline to evaluate the temperature, deformation, stress and strain profiles. In this report, we assumed the total absorbed power is 8870 W in PPS-fan condition. The calculation was done by using ANSYS 16.0 Mechanical.

The analysis conditions are listed in Table 1.1. These values are cited from the Technical Specification(NX-C-SPC-FXI-PDS-001). The more detail of the analysis conditions are written in Page 3.

Table 1.2 shows the analysis results. All these analysis results cleared the design criteria.(LT-C-XFD-SPC-COM-001).

	Analysis conditions	
Total Absorbed Power	**8870**	W
Distance from the source	**27.4**	m
Incident Beam	**H × V = 22.8 mm × 17.1 mm**	

Table 1.1 Analysis conditions

	Results	
Maximum Temperature	**154.2**	℃
Cooling pipe Temperature	**58.4**	℃
Surface Temperature	**54.0**	℃
Maximum Von Mises Stress	**253**	MPa
Maximum Equivalent Elastic Strain	**0.23**	%
Substrate material	**Glidcop**	

Table 1.2 Results Summary

2. Dimensional drawing

Please see the dimensional drawing of the FM in Fig. 2.1, Fig. 2.2, Fig. 2.3 and Fig. 2.4.
The analysis was done by using these simplified model

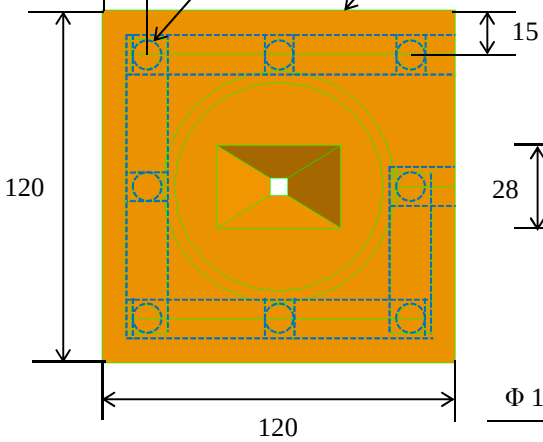

Fig. 2.1 Front view

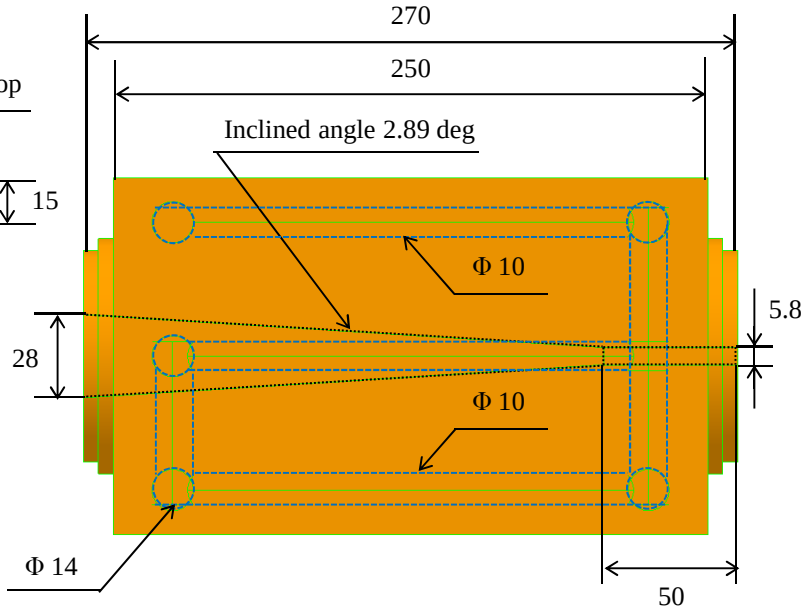

Fig. 2.2 Side view

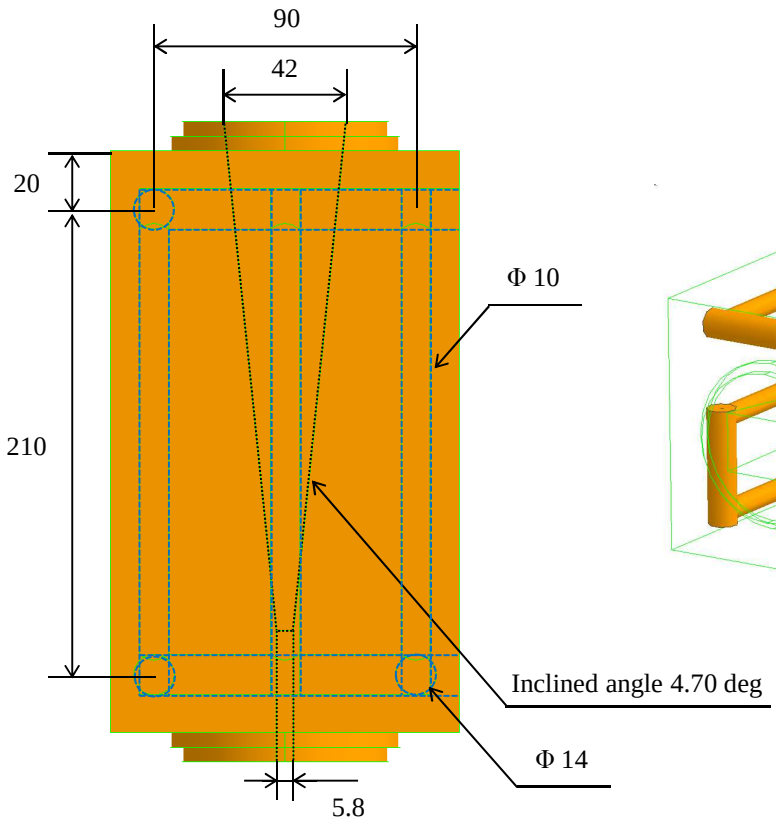

Fig. 2.3 Underside view

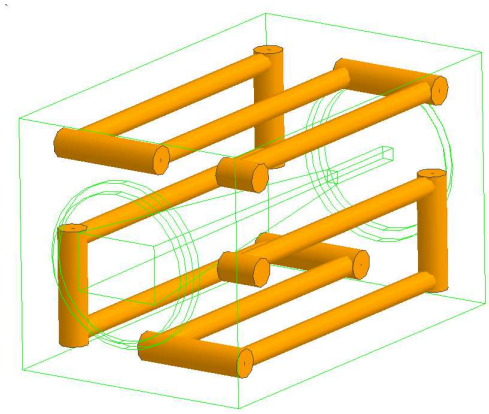

Fig. 2.4 Bird's eye view of cooling pipe

3. Boundary conditions

3.1 For thermal analysis

The green area in Fig. 3.1.1 shows the heat input area. The yellow surface in Fig. 3.1.2 shows the convection surface. Table 3.1 shows the boundary conditions for thermal analysis. We assumed the convection coefficient is enhanced by wire coil. The detail of power map applied to the fixed mask is shown in Page 5.

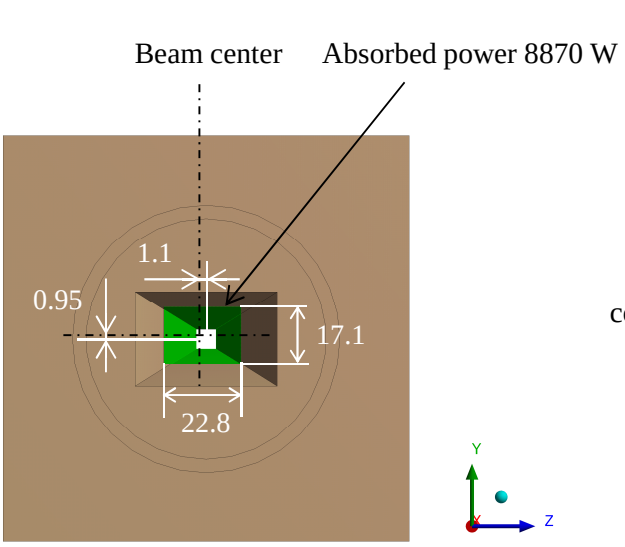

Fig. 3.1.1 Heat input area (Front view)

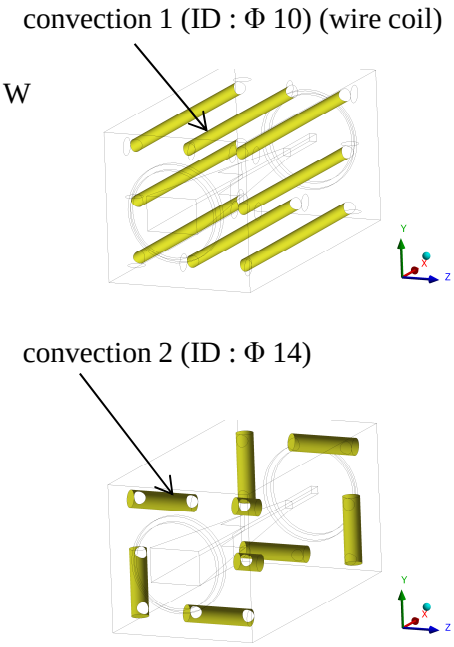

Fig. 3.1.2 convection surface

	Analysis Conditions		
Cooling Water temperature	**29.5**		℃
Total absorbed power	**8870**		W
Maximum heat flux	**5.54**		W/mm^2
Distance from the source	**27.4**		m
Beam size	**H × V = 22.8 mm × 17.1 mm**		
Pressure Loss	**0.035**		MPa
	Convection 1 (wire coil)	Convection 2	
Convection coefficient	**12000**	**3000**	W/m^2・K
Flow rate	**6.0**	**6.0**	L/min
Flow velocity	**1.27**	**0.65**	m/s
Pipe inner diameter	**10**	**14**	mm

Table 3.1 Analysis Conditions

3. Boundary conditions

3.2 For Static structural analysis

Fig. 3.2 shows the support points. All boundary conditions for static structural analysis is shown in Table 3.2.

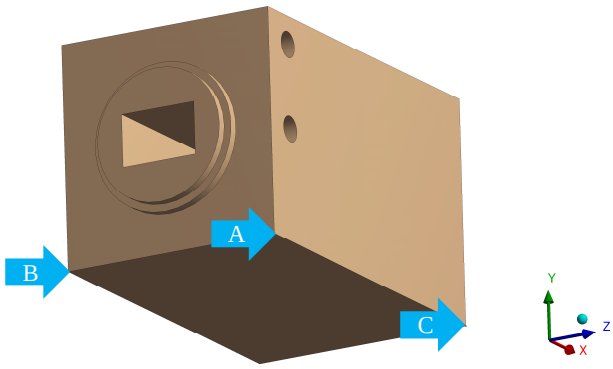

Fig. 3.2 Support Points

	Analysis Conditions	
Point A	**Fixed : X, Y, Z Axis**	
Point B	**Fixed : X, Y Axis**	**Free : Z Axis**
Point C	**Fixed : Y Axis**	**Free : X, Z Axis**
Reference temperature	**29.5**	℃

Table 3.2 Support boundary conditions

3.3 Mesh model

Fig. 3.3 shows the mesh model used for analysis.

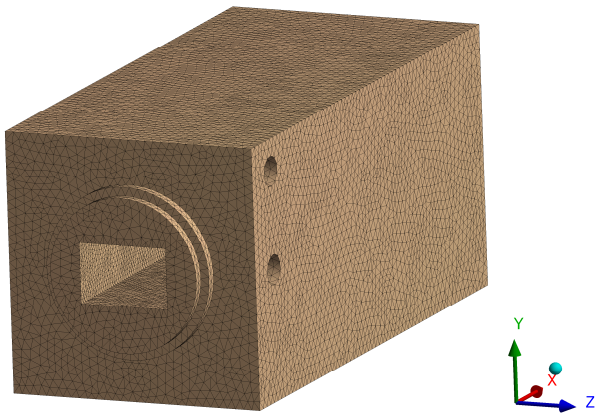

Fig. 3.3 Mesh model

3. Boundary conditions

3.4 Physical properties of materials

Table 3.4 shows the physical properties of materials used for analysis.

	Density	Young's modulus	Poisson's ratio	Thermal Expansion	Thermal Conductivity
Glidcop	8900 kg/m³	1.3E+11 Pa	0.326	1.66E-05 1/K	365 W/m･K

Table 3.4 Physical properties of materials

3.5 Power map calculation

The power map calculation was done by using *SPECTRA software. The Fig. 3.5.1 and Fig. 3.5.2 show the power map which applied for analysis. Table 3.5 show the heat balance sheet.

* T. Tanaka and H. Kitamura, J. Synchrotron Radiation 8 (2001) 1221.
Email : ztanaka@spring8.or.jp
URL : http://radiant.harima.riken.go.jp/spectra/index.html

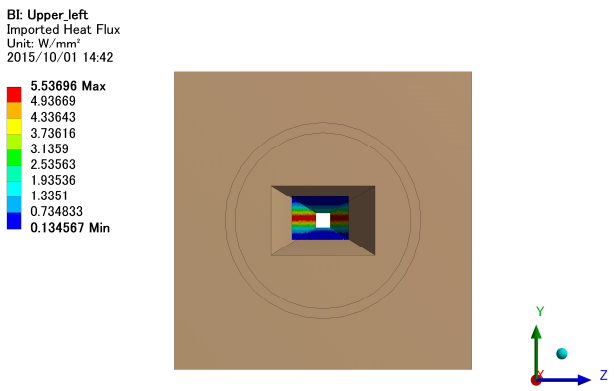

Fig. 3.5.1 Front view of power map

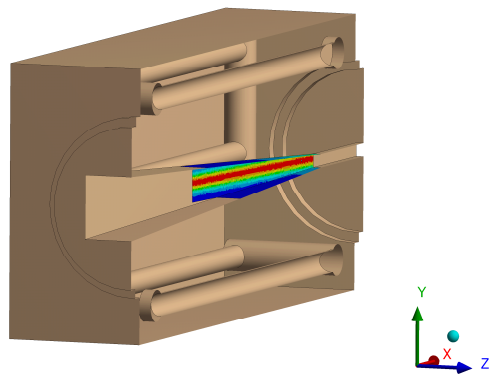

Fig. 3.5.2 Sectional view of power map

Total power calculation		
Total Power	**10683**	W
Total Absorbed power	**8870**	W
Total passing power	**1813**	W

Table 3.5 Heat balance sheet

4. Calculation results

4.1 Temperature profile

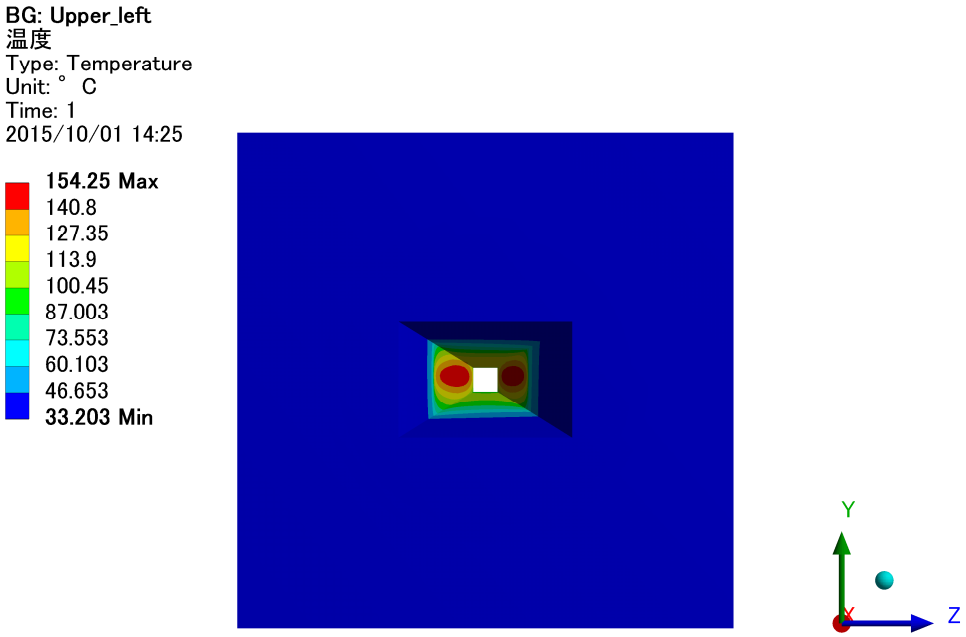

Fig. 4.1.1 Temperature profile

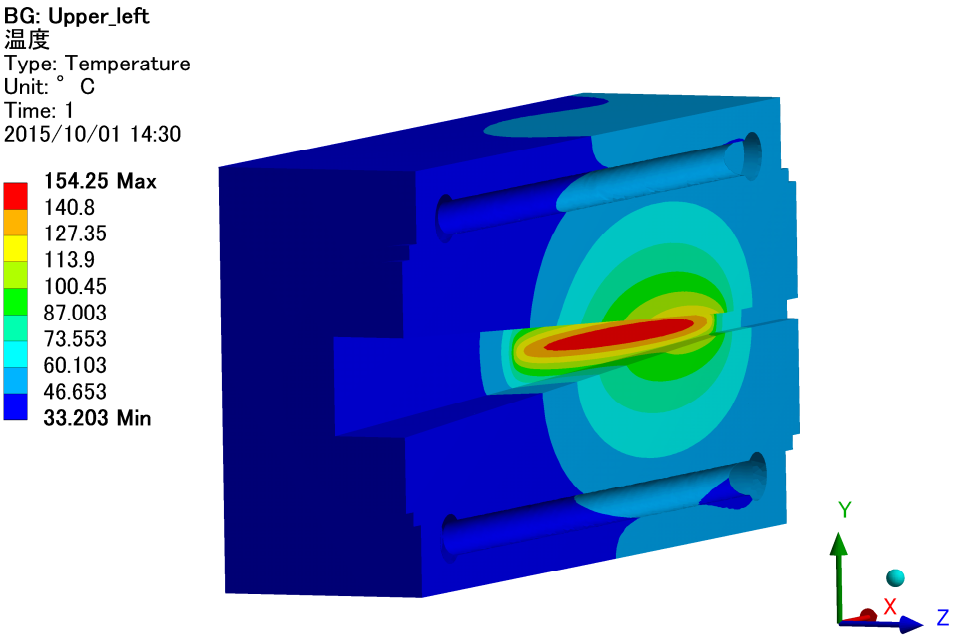

Fig. 4.1.2 Sectional view of temperature profile

4.1 Temperature profile

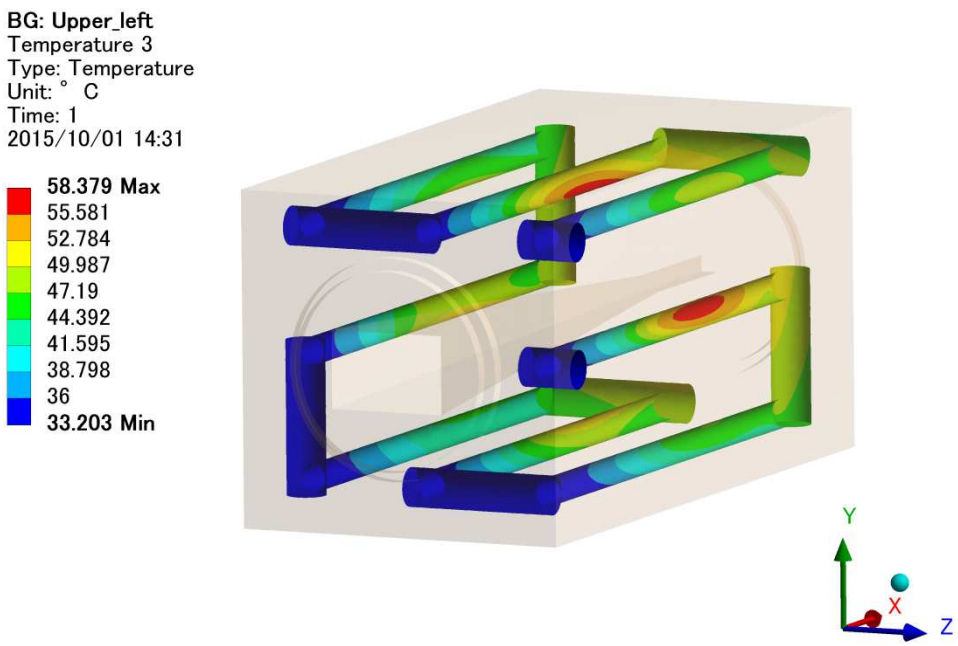

Fig. 4.1.3 Temperature profile of the cooling pipe

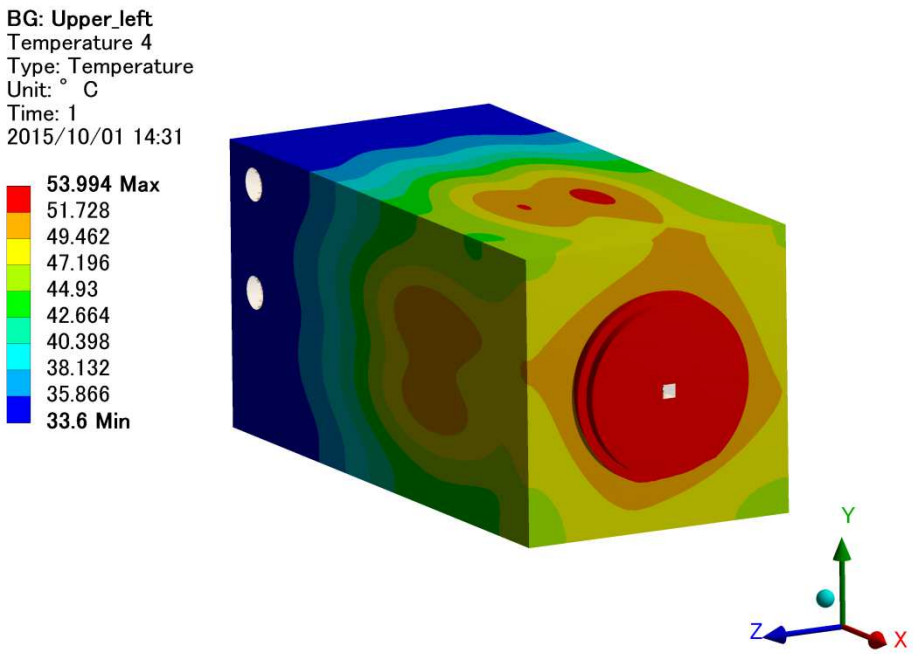

Fig. 4.1.4 Back view of surface temperature profile

4.2 Deformation profile

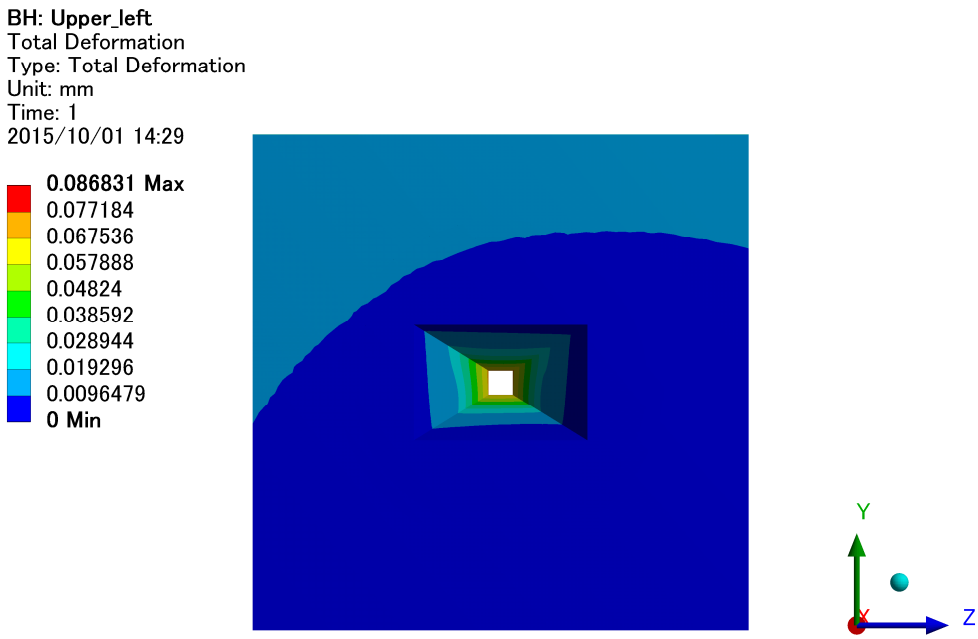

Fig. 4.2.1 Total Deformation

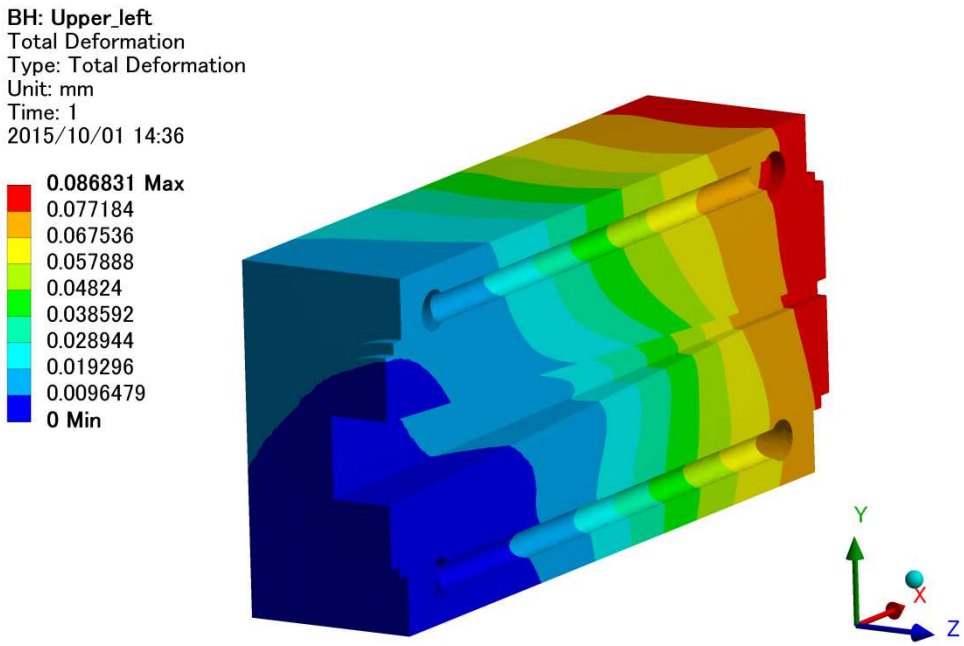

Fig. 4.2.2 Sectional view of Total Deformation

4.3 Stress profile

Fig. 4.3.1 Von Mises Stress

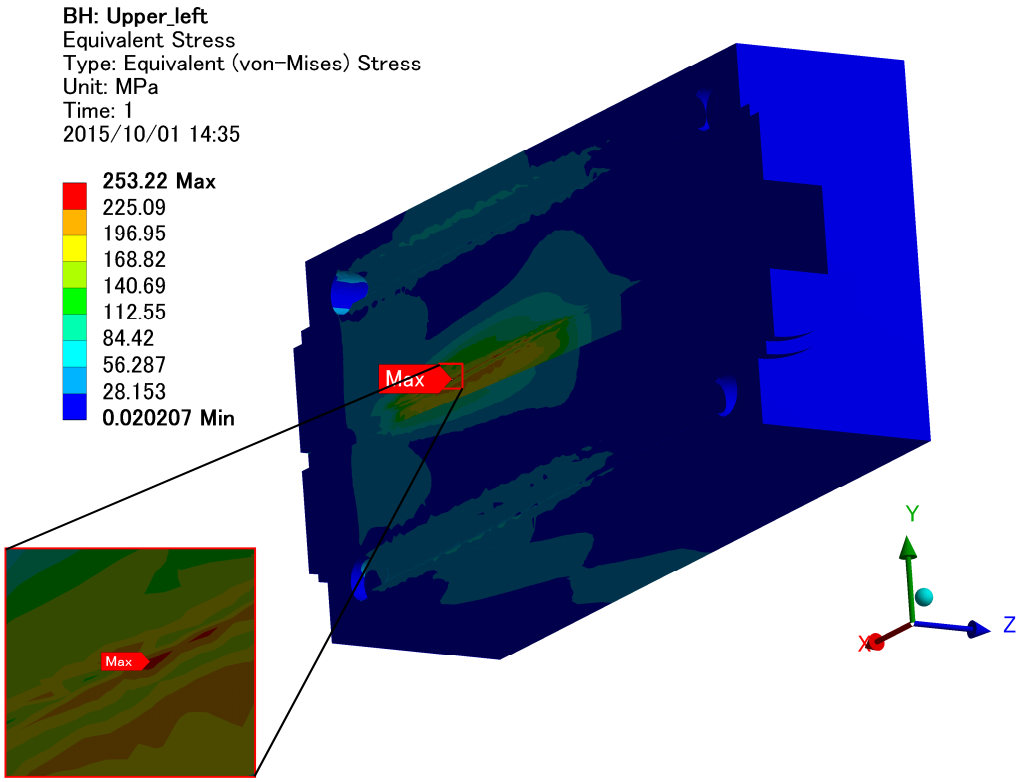

Fig. 4.3.2 Sectional view of Von Mises Stress

4.4 Elastic strain profile

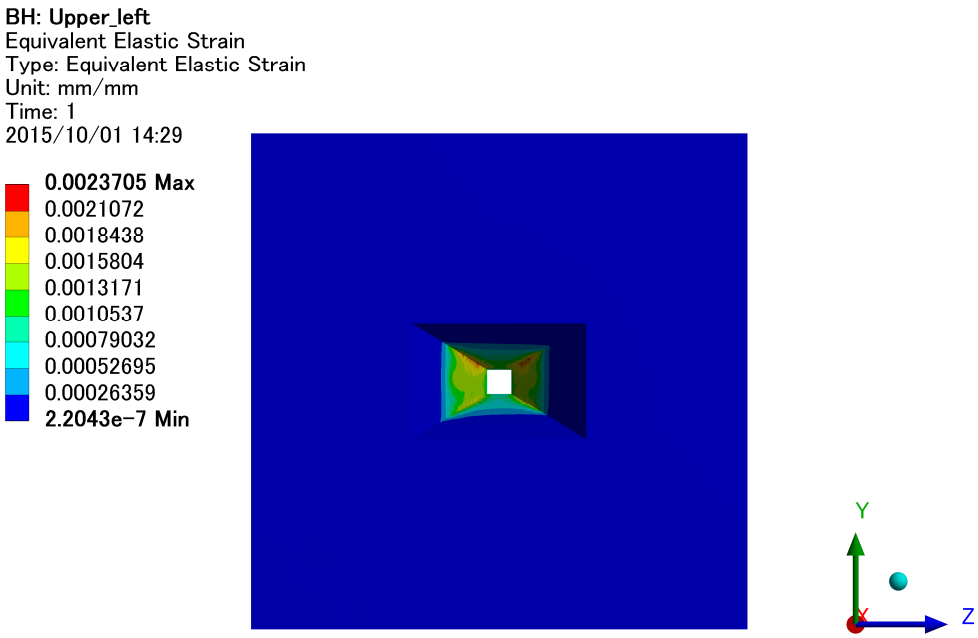

Fig. 4.4.1 Equivalent Elastic Strain

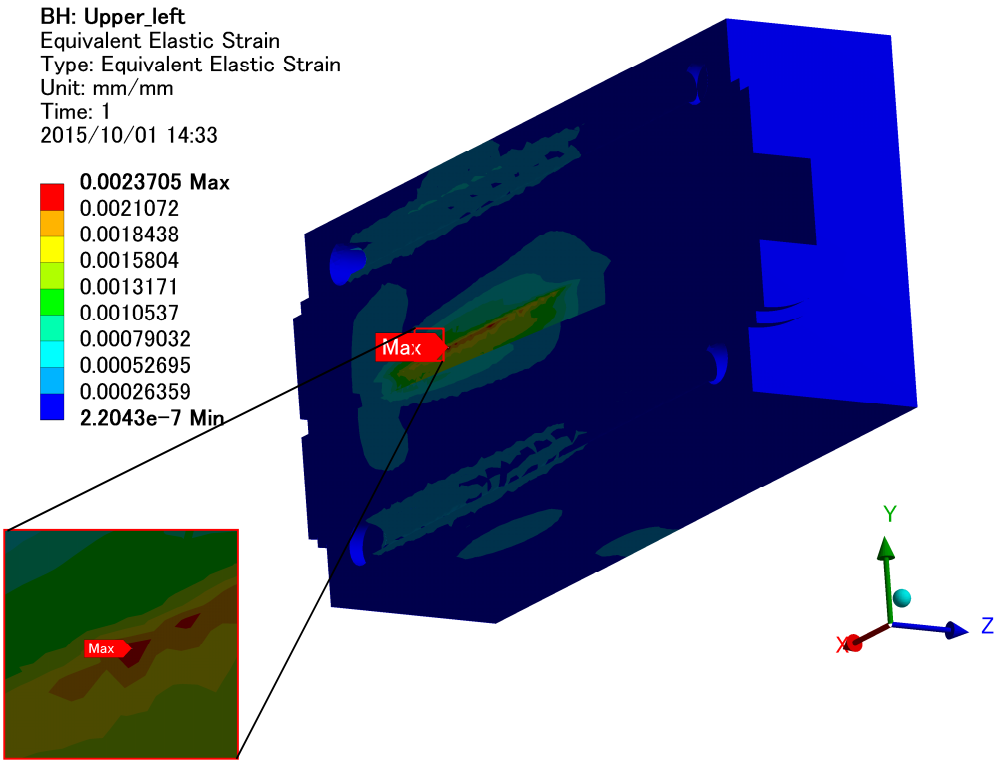

Fig. 4.4.2 Sectional view of Equivalent Elastic Strain

NSLS 2 FXI Fixed Mask

Thermo-Structural analysis
- In PPS-fan condition -

- Where power envelope is upper right edge of PPS Max Fan envelope

TOYAMA Co., Ltd

Date : Oct. 1, 2015

Created by : Tsubota

1. Scope

We have performed thermo-structural analysis of the Fixed Mask(FM) of NSLS 2 FXI beamline to evaluate the temperature, deformation, stress and strain profiles. In this report, we assumed the total absorbed power is 8870 W in PPS-fan condition. The calculation was done by using ANSYS 16.0 Mechanical.

The analysis conditions are listed in Table 1.1. These values are cited from the Technical Specification(NX-C-SPC-FXI-PDS-001). The more detail of the analysis conditions are written in Page 3.

Table 1.2 shows the analysis results. All these analysis results cleared the design criteria.(LT-C-XFD-SPC-COM-001).

	Analysis conditions	
Total Absorbed Power	**8870**	W
Distance from the source	**27.4**	m
Incident Beam	**H × V = 22.8 mm × 17.1 mm**	

Table 1.1 Analysis conditions

	Results	
Maximum Temperature	**145.5**	℃
Cooling pipe Temperature	**59.3**	℃
Surface Temperature	**54.1**	℃
Maximum Von Mises Stress	**218**	MPa
Maximum Equivalent Elastic Strain	**0.20**	%
Substrate material	**Glidcop**	

Table 1.2 Results Summary

2. Dimensional drawing

Please see the dimensional drawing of the FM in Fig. 2.1, Fig. 2.2, Fig. 2.3 and Fig. 2.4.
The analysis was done by using these simplified model

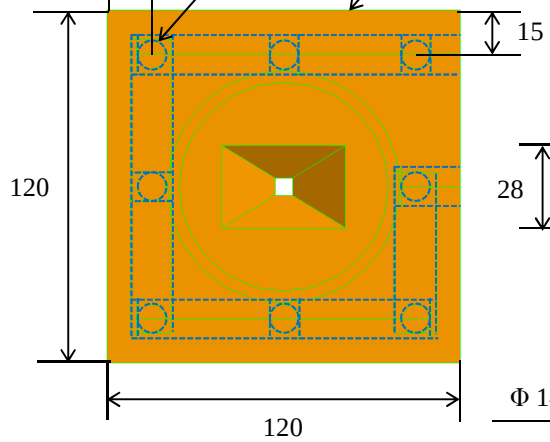

Fig. 2.1 Front view

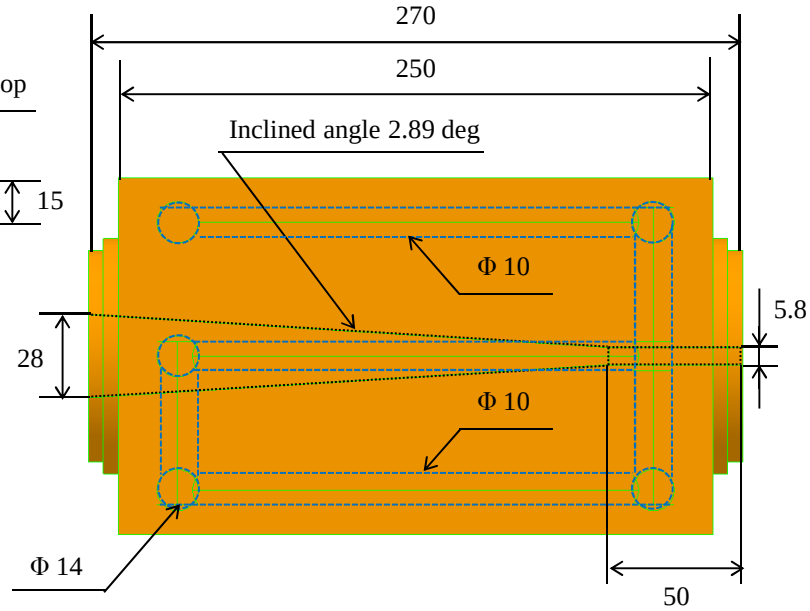

Fig. 2.2 Side view

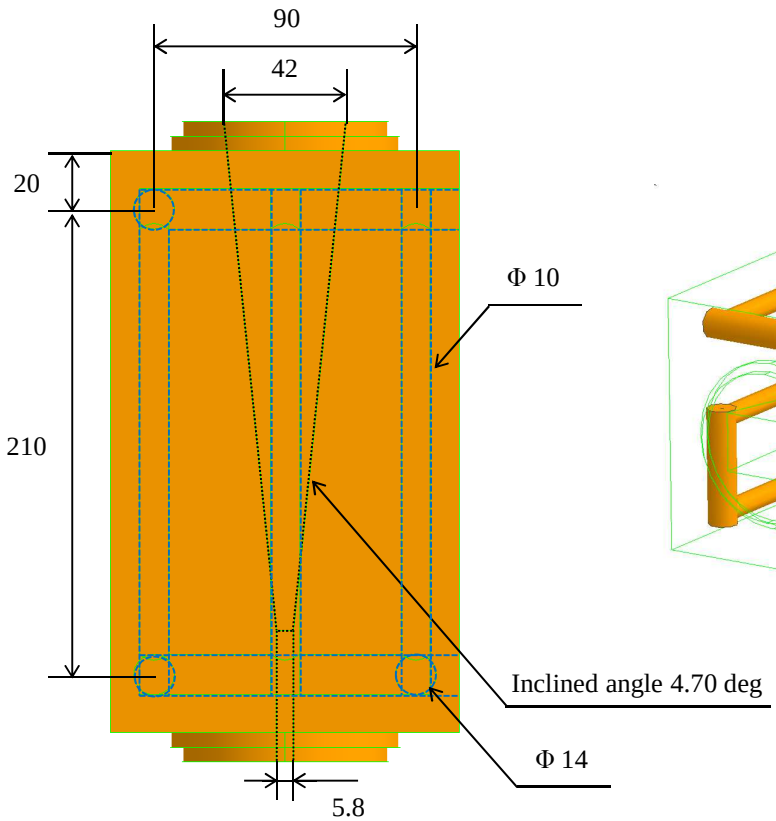

Fig. 2.3 Underside view

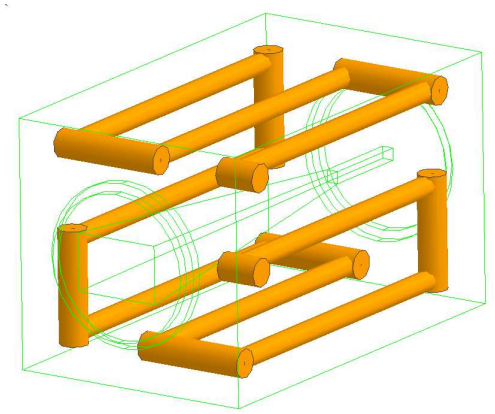

Fig. 2.4 Bird's eye view of cooling pipe

3. Boundary conditions

3.1 For thermal analysis

The green area in Fig. 3.1.1 shows the heat input area. The yellow surface in Fig. 3.1.2 shows the convection surface. Table 3.1 shows the boundary conditions for thermal analysis. We assumed the convection coefficient is enhanced by wire coil. The detail of power map applied to the fixed mask is shown in Page 5.

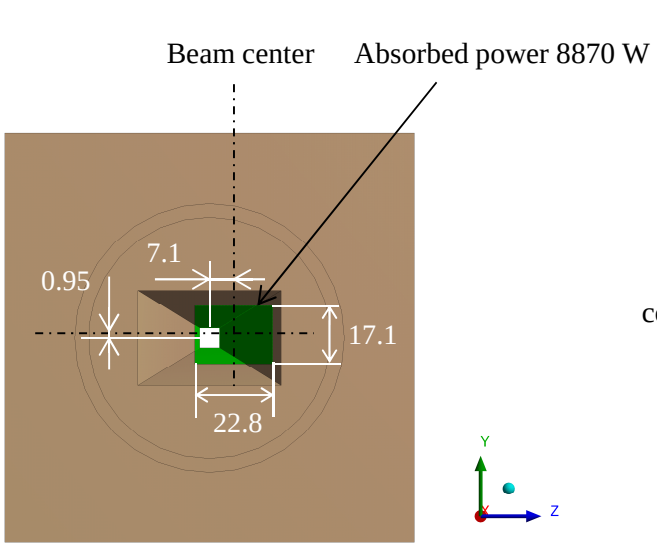

Fig. 3.1.1 Heat input area (Front view)

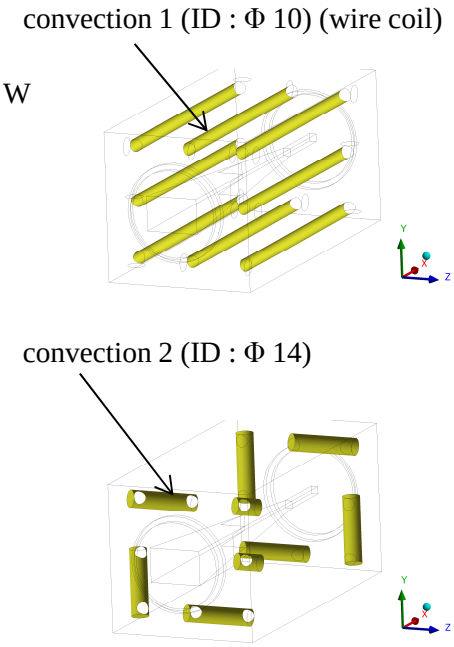

Fig. 3.1.2 convection surface

	Analysis Conditions		
Cooling Water temperature	**29.5**	℃	
Total absorbed power	**8870**	W	
Maximum heat flux	**5.54**	W/mm^2	
Distance from the source	**27.4**	m	
Beam size	**H × V = 22.8 mm × 17.1 mm**		
Pressure Loss	**0.035**	MPa	
	Convection 1 (wire coil)	Convection 2	
Convection coefficient	**12000**	**3000**	W/m^2・K
Flow rate	**6.0**	**6.0**	L/min
Flow velocity	**1.27**	**0.65**	m/s
Pipe inner diameter	**10**	**14**	mm

Table 3.1 Analysis Conditions

3. Boundary conditions

3.2 For Static structural analysis

Fig. 3.2 shows the support points. All boundary conditions for static structural analysis is shown in Table 3.2.

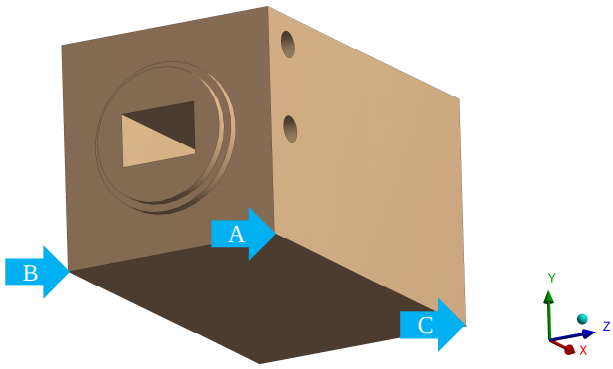

Fig. 3.2 Support Points

	Analysis Conditions	
Point A	**Fixed : X, Y, Z Axis**	
Point B	**Fixed : X, Y Axis**	**Free : Z Axis**
Point C	**Fixed : Y Axis**	**Free : X, Z Axis**
Reference temperature	**29.5**	℃

Table 3.2 Support boundary conditions

3.3 Mesh model

Fig. 3.3 shows the mesh model used for analysis.

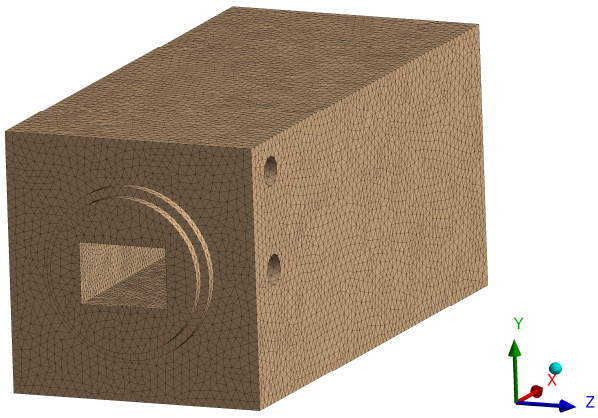

Fig. 3.3 Mesh model

3. Boundary conditions

3.4 Physical properties of materials

Table 3.4 shows the physical properties of materials used for analysis.

	Density	Young's modulus	Poisson's ratio	Thermal Expansion	Thermal Conductivity
Glidcop	8900 kg/m³	1.3E+11 Pa	0.326	1.66E-05 1/K	365 W/m･K

Table 3.4 Physical properties of materials

3.5 Power map calculation

The power map calculation was done by using *SPECTRA software. The Fig. 3.5.1 and Fig. 3.5.2 show the power map which applied for analysis. Table 3.5 show the heat balance sheet.

* T. Tanaka and H. Kitamura, J. Synchrotron Radiation 8 (2001) 1221.
Email : ztanaka@spring8.or.jp
URL : http://radiant.harima.riken.go.jp/spectra/index.html

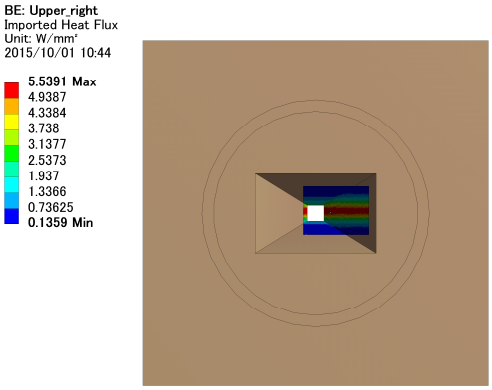

Fig. 3.5.1 Front view of power map

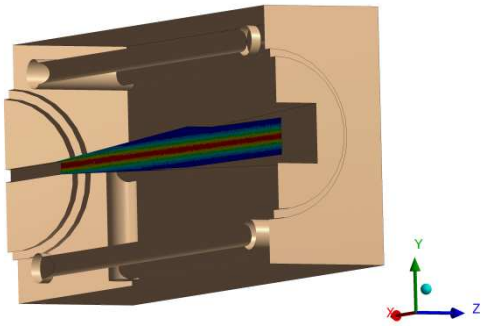

Fig. 3.5.2 Sectional view of power map

Total power calculation		
Total Power	**10683**	W
Total Absorbed power	**8870**	W
Total passing power	**1813**	W

Table 3.5 Heat balance sheet

4. Calculation results

4.1 Temperature profile

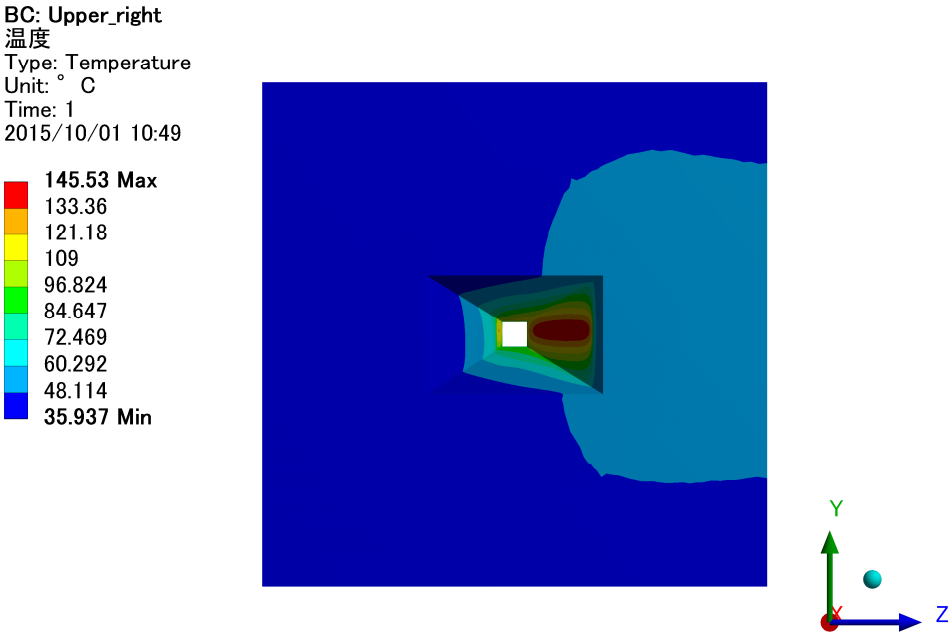

Fig. 4.1.1 Temperature profile

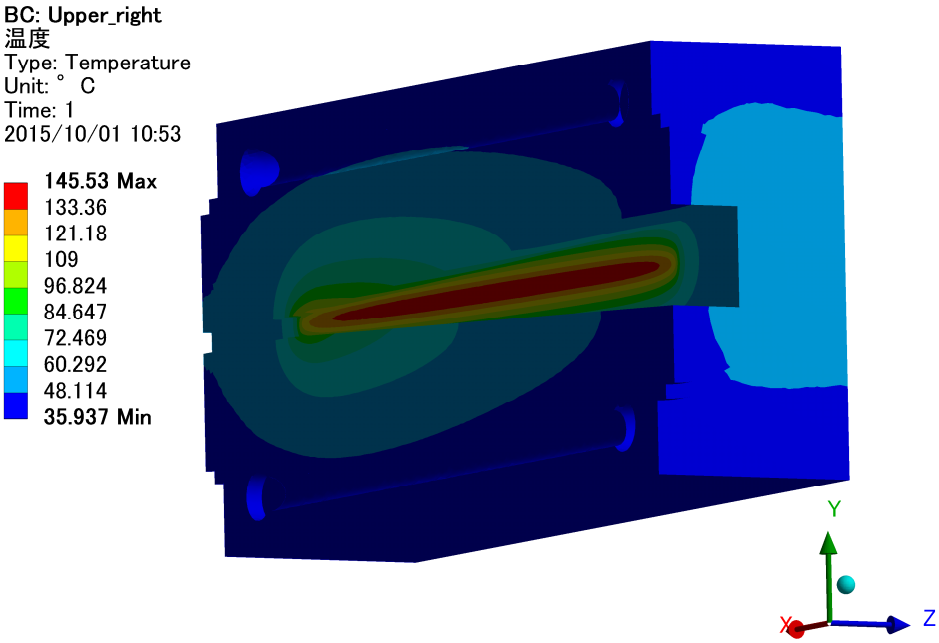

Fig. 4.1.2 Sectional view of temperature profile

4.1 Temperature profile

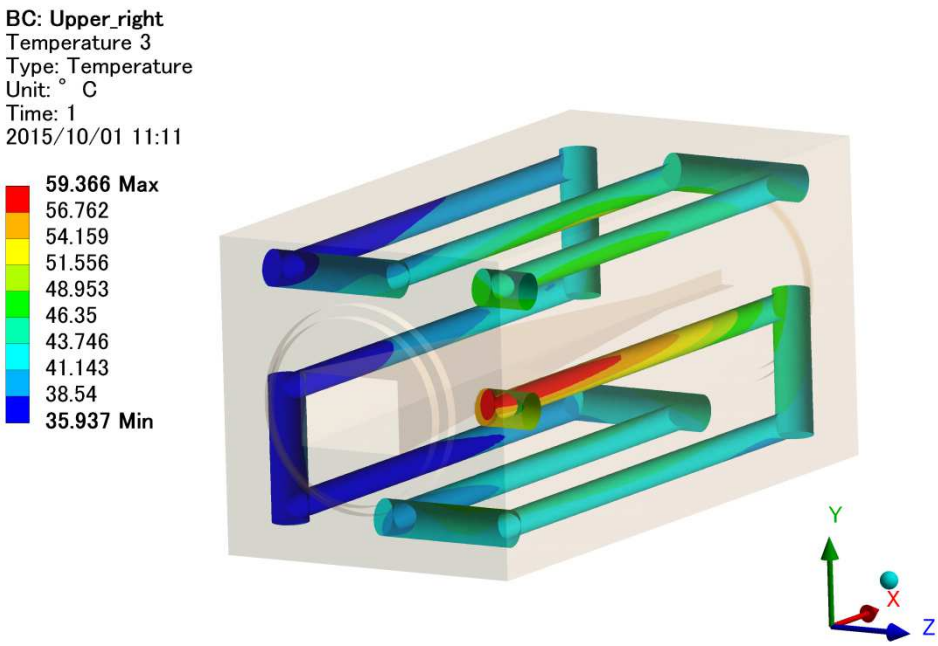

Fig. 4.1.3 Temperature profile of the cooling pipe

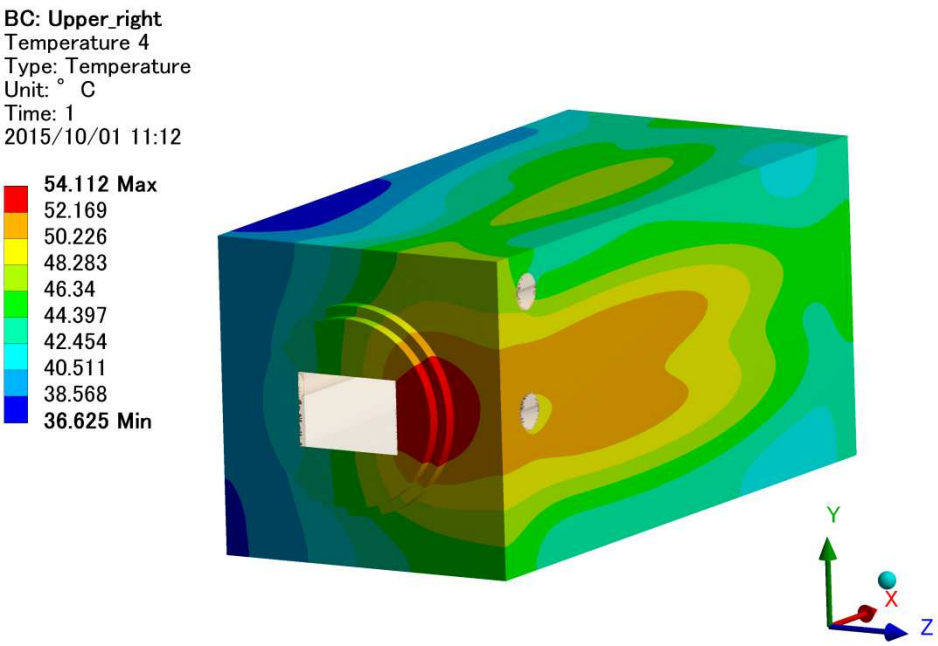

Fig. 4.1.4 Back view of surface temperature profile

4.2 Deformation profile

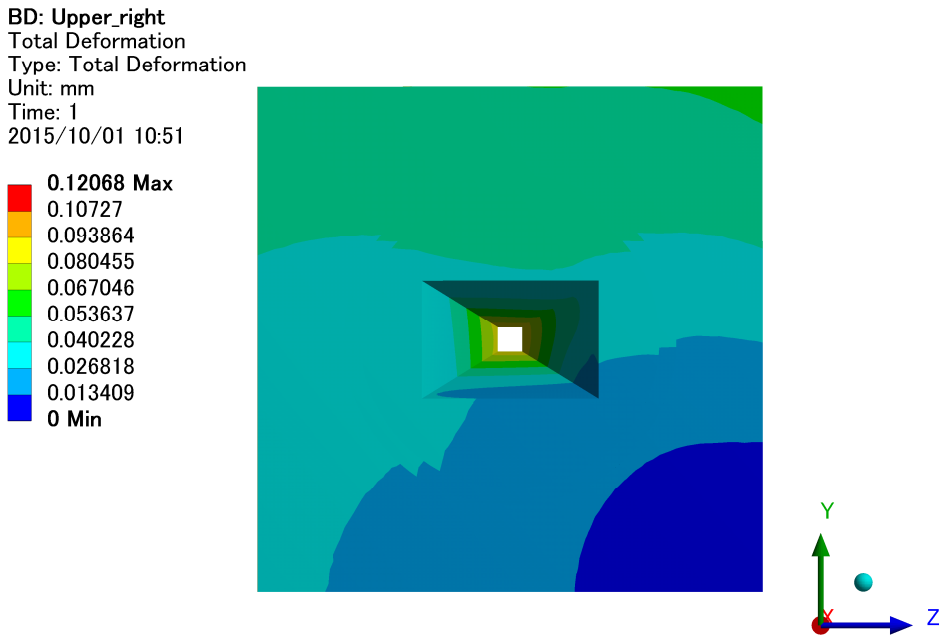

Fig. 4.2.1 Total Deformation

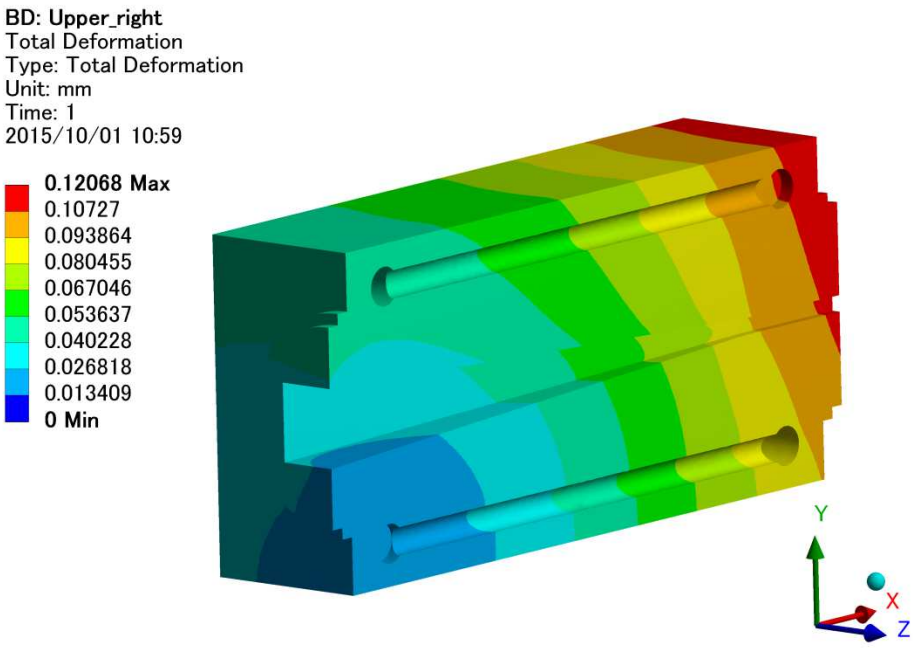

Fig. 4.2.2 Sectional view of Total Deformation

4.3 Stress profile

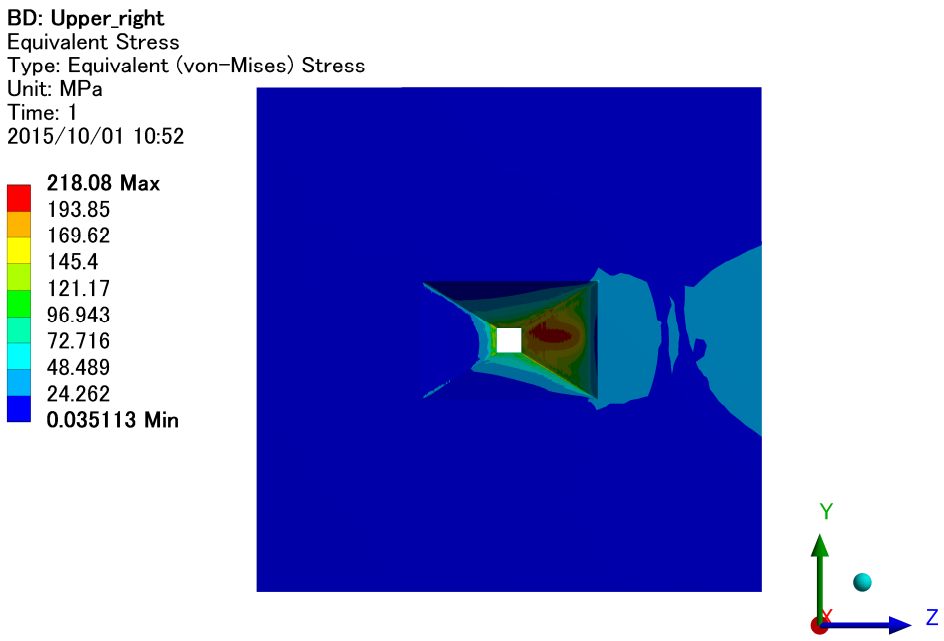

Fig. 4.3.1 Von Mises Stress

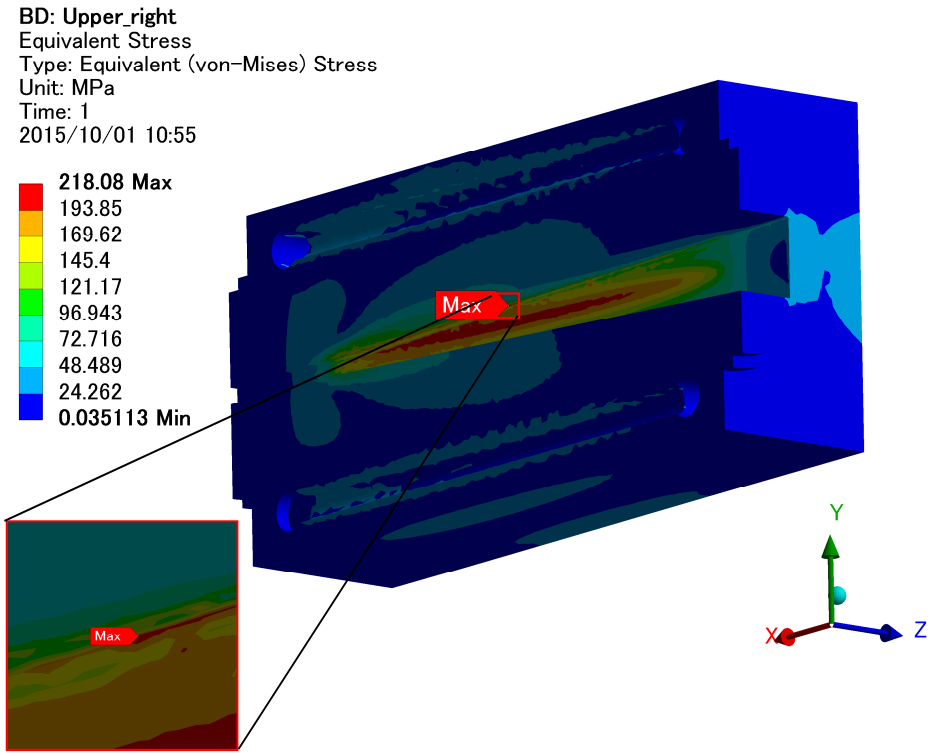

Fig. 4.3.2 Sectional view of Von Mises Stress

4.4 Elastic strain profile

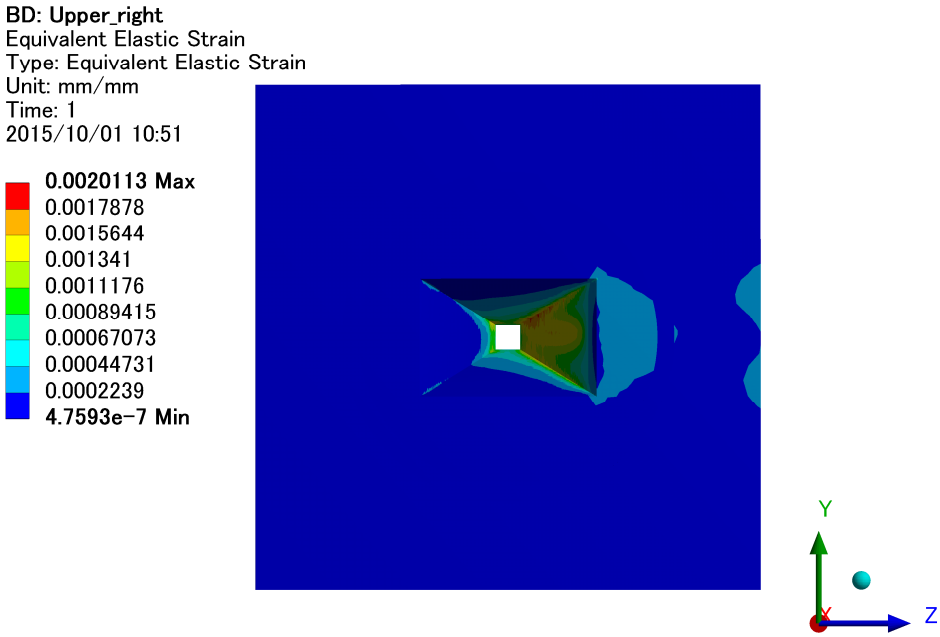

Fig. 4.4.1 Equivalent Elastic Strain

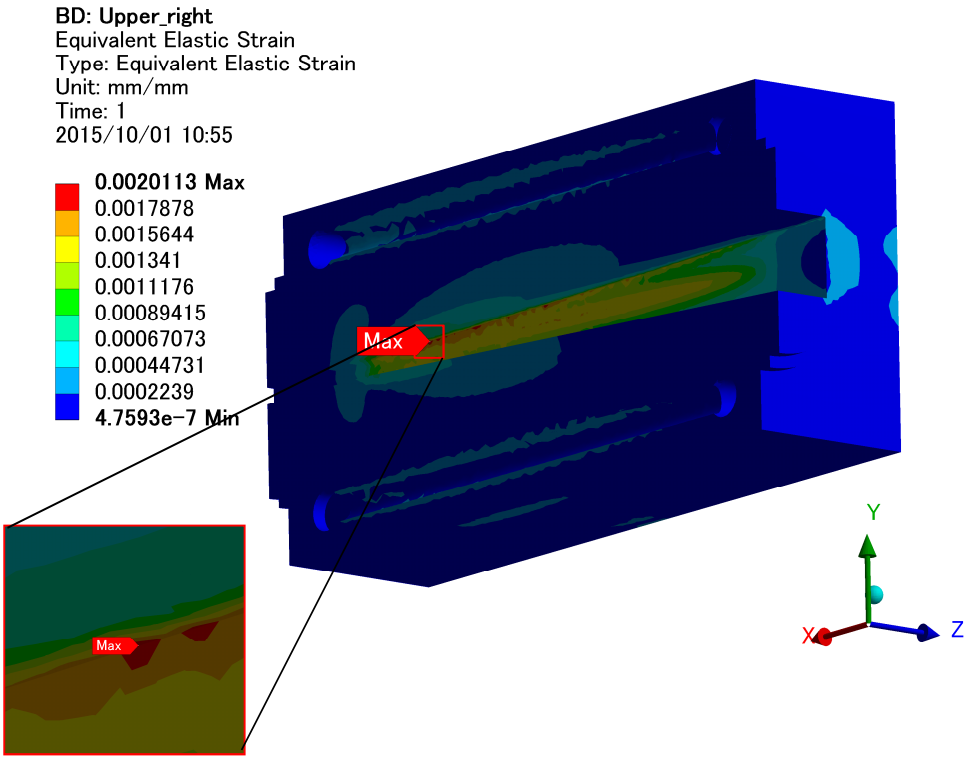

Fig. 4.4.2 Sectional view of Equivalent Elastic Strain

NSLS 2 FXI Collimating mirror

Thermo-Structural Analysis

- Thermal contact conductance 7500 W/m^2・K
- Synchrotron light irradiates the Si surface

TOYAMA Co., Ltd

Created by : Tsubota

Date : Nov. 9, 2015

1. Scope

We have performed the thermo-structural analysis of the collimating mirror of NSLS 2 FXI beamline to evaluate the mirror deformation and slope error. In this report, we have calculated the notch model. The analysis was done with using the FEA software ANSYS 16.0 Mechanical.

Table 1.1 shows the analysis model. We have analyzed current scenario(model 1) and upgrade scenario(model 2). The analysis results are summarized in Table 1.2. These analysis results show the slope errors for tangential direction is enough small.

	Analysis conditions	
Distance from the source	**29.5** m	
Coating material	**Si**	
	model 1	model 2
Beam size (H [mm] ×V [mm])	**6.2 × 1408**	**12.1 × 1408**
Total Absorbed Power	**1300** W	**2600** W

Table 1.1. Analysis models

		model 1		model 2	
Tangential Direction (LINE ①)	Deformation(⊿P-P)	**14.3**	μm	**30.7**	μm
	*Slope Error (RMS)	**0.32**	μrad	**0.69**	μrad
	Radius of curvature	**-16.2**	km	**-7.6**	km
Sagittal Direction (LINE ②)	Deformation(⊿P-P)	**0.088**	μm	**0.15**	μm
	Slope Error (RMS)	**12.2**	μrad	**21.9**	μrad
Substrate material : Si					

*Slope error (RMS) = Calculated from the best fit cylinder removed data.

Table 1.2. Analysis Summary

2. Dimensional drawing

Fig. 2.1, 2.2 and 2.3 show the dimensional drawing of the collimating mirror.

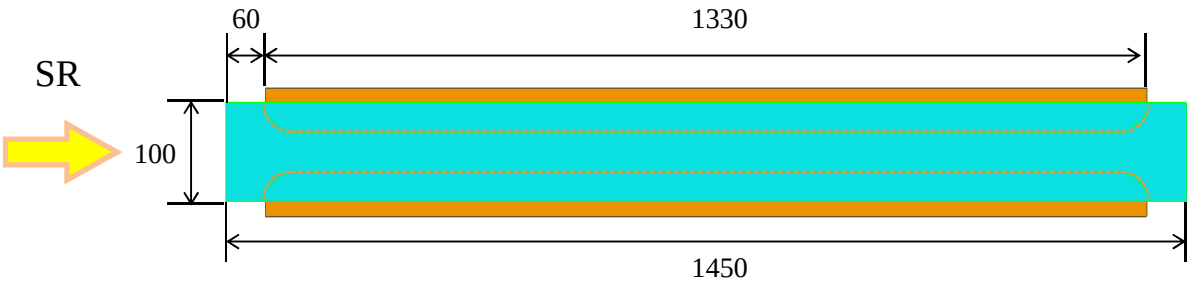

Fig. 2.1 Top view

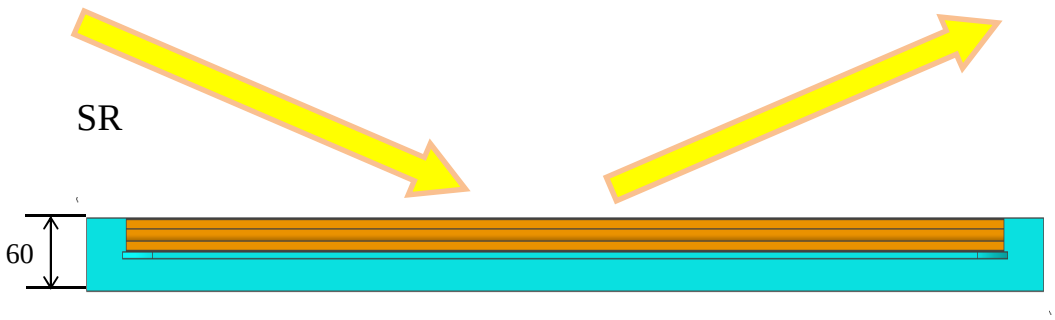

Fig. 2.2 Side view

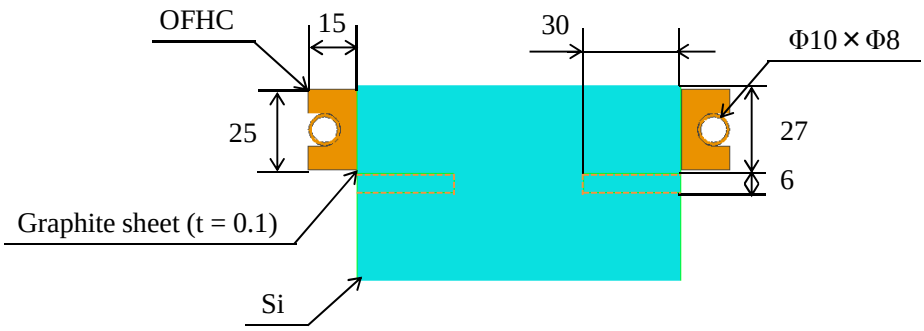

Fig. 2.3 Front view

3. Boundary conditions

3.1 For thermal analysis

Fig. 3.1.1 and Fig. 3.1.2 show heat flux profile and heat input area. The power map calculation was done by using SPECTRA software*. The yellow surface in Fig. 3.1.3 shows the convection surface. Table 3.1 shows the boundary conditions for thermal analysis. The detail of power map applied to the fixed mask is shown in Page 6.

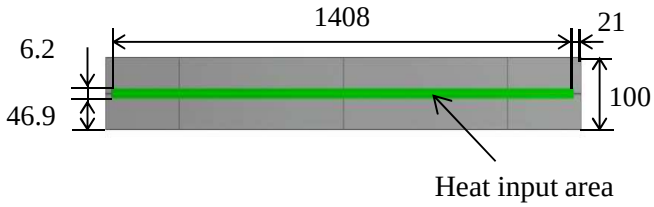

Fig. 3.1.1 Heat input area (model 1)

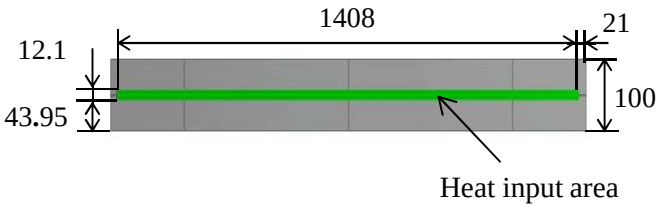

Fig. 3.1.2 Heat input area (model 2)

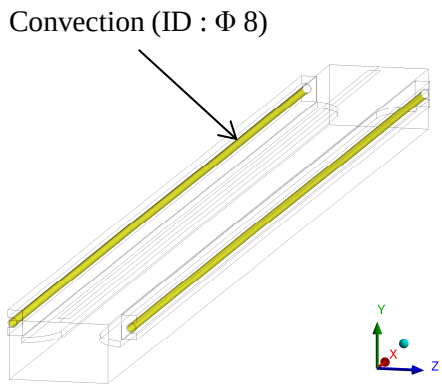

Fig. 3.1.3 convection surface

	Analysis Conditions	
Cooling Water temperature	**25.0**	℃
Distance from the source	**29.5**	m
Incident Angle	**4.4**	mrad
	model 1	model 2
Total absorbed power	**1300** W	**2600** W
Maximum heat flux	**0.197** W/mm^2	**0.197** W/mm^2
Footprint (H mm × V mm)	**6.2 × 1408**	**12.1 × 1408**
Convection coefficient	**9000**	W/m^2・K
Flow rate	**6.0**	L/min
Flow velocity	**2.0**	m/s
Pipe inner diameter	**8**	mm
Cooling water pressure loss	**0.035**	MPa
Thermal contact conductance between Si and OFHC	**7500**	W/m^2・K

Table 3.1 Analysis Conditions

3. Boundary conditions

3.2 For Static structural analysis

Fig. 3.2 shows the support boundary conditions. We assumed that the graphite sheet do not combine Si and OFHC, so the structural analysis was done by using Fig. 3.2 model. All boundary conditions for static structural analysis is shown in Table 3.2.

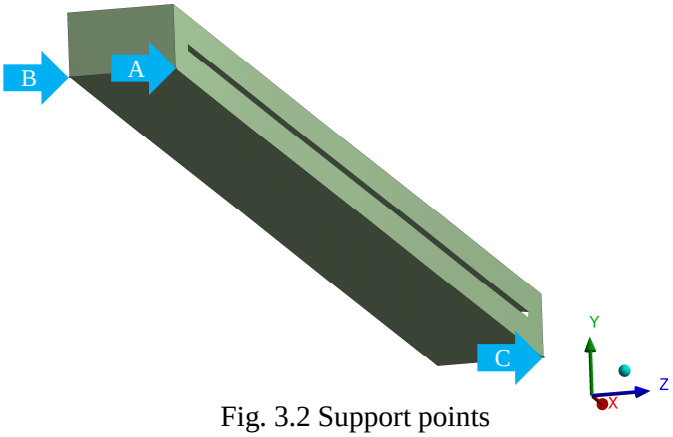

Fig. 3.2 Support points

	Analysis Conditions	
Point A	**Fixed : X, Y, Z Axis**	
Point B	**Fixed : X, Y Axis**	**Free : Z Axis**
Point C	**Fixed : Y Axis**	**Free : X, Z Axis**
Reference temperature	**25.0**	℃

Table. 3.2 Support boundary conditions

3.3 Mesh model

Fig. 3.3 shows the mesh model used for analysis.

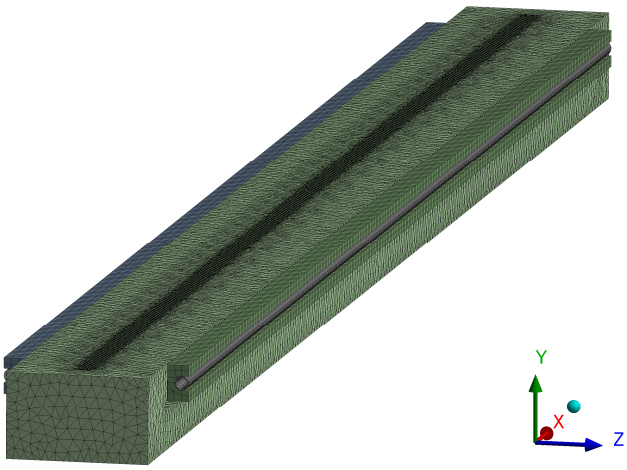

Fig. 3.3 Mesh model

3. Boundary conditions

3.4 Physical properties of materials

Table 3.4 shows the physical properties of materials used for analysis.

	Density	Young's modulus	Poisson's ratio	Thermal Expansion	Thermal Conductivity
Si	2330 kg/m³	1.65E+11 Pa	0.26	2.60E-06 1/K	148 W/m・K
OFHC	8940 kg/m³	1.18E+11 Pa	0.33	1.77E-05 1/K	391 W/m・K
Graphite sheet	850 kg/m³	1.08E+8 Pa	0.3	3.20E-05 1/K	*0.75W/m・K

・The thermal conductivity is adjusted to become the thermal contact conductance 7500 W/m²・K for the sheet thickness of 0.1 mm.

Table 3.4 Physical properties of materials

3.5 Schematic for the calculation lines

The Red lines in Fig. 3.5 show the calculation lines of surface slope(LINE ①-LINE ③).

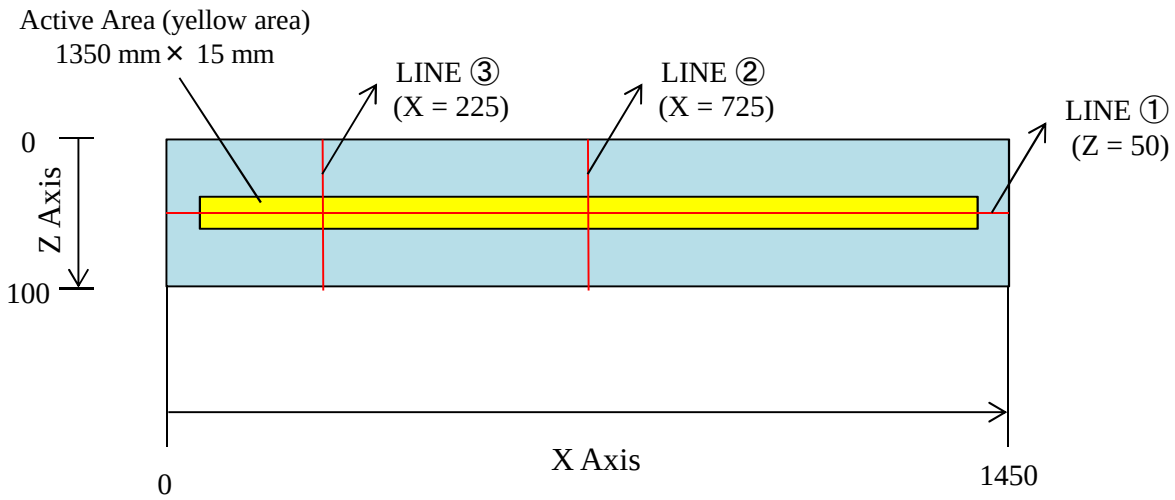

Fig. 3.5 Schematic for the calculation lines of surface slope

3. Boundary conditions

3.6 Power map calculation

The power map calculation was done by using *SPECTRA software. The Fig. 3.6.1 and Fig. 3.6.2 show the power map which applied for analysis. We assumed some of the synchrotron light is absorbed in collimating mirror. Table 3.6 show the heat balance sheet.

* T. Tanaka and H. Kitamura, J. Synchrotron Radiation 8 (2001) 1221.
Email : ztanaka@spring8.or.jp
URL : http://radiant.harima.riken.go.jp/spectra/index.html

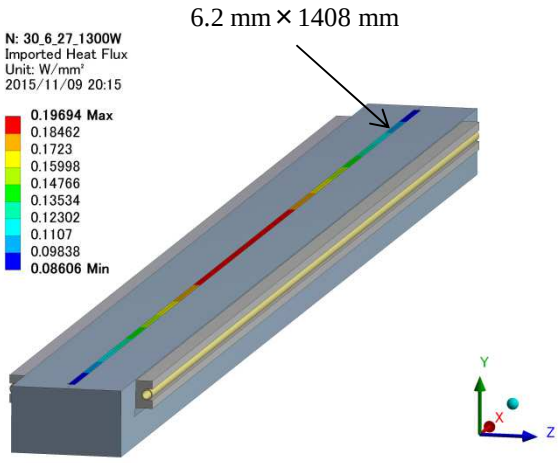

Fig. 3.6.1 The power map of model 1

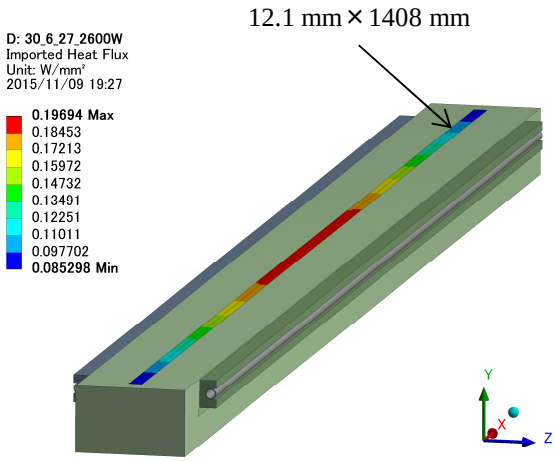

Fig. 3.6.2 The power map of model 2

Total power calculation	
Total absorbed power (model 1)	**1300** W
Total absorbed power (model 2)	**2600** W

Table 3.6 Heat balance sheet

4. Analysis results

4.1 model 1 (heat input : 1300 W)

4.1.1 Temperature profile

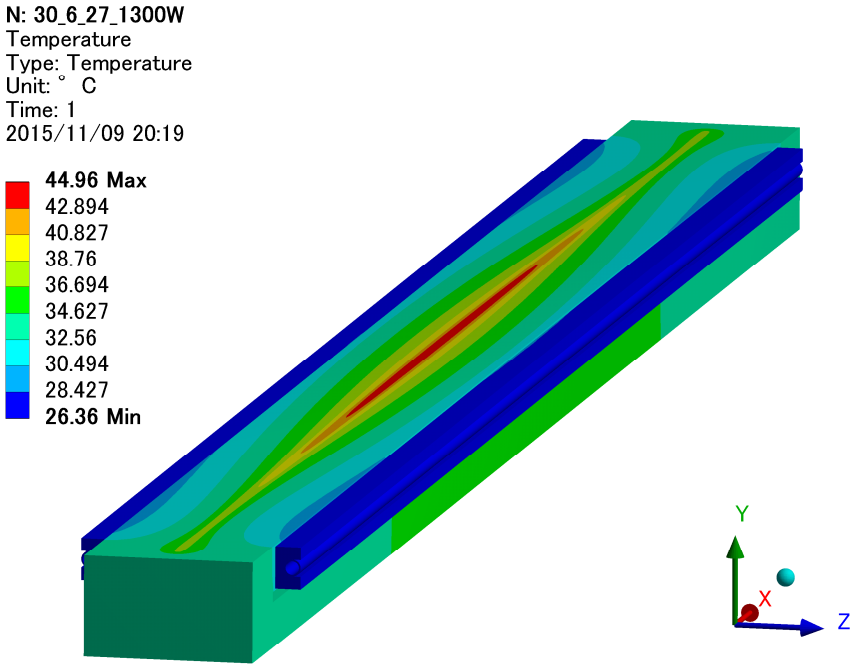

Fig. 4.1.1 (a) Temperature profile

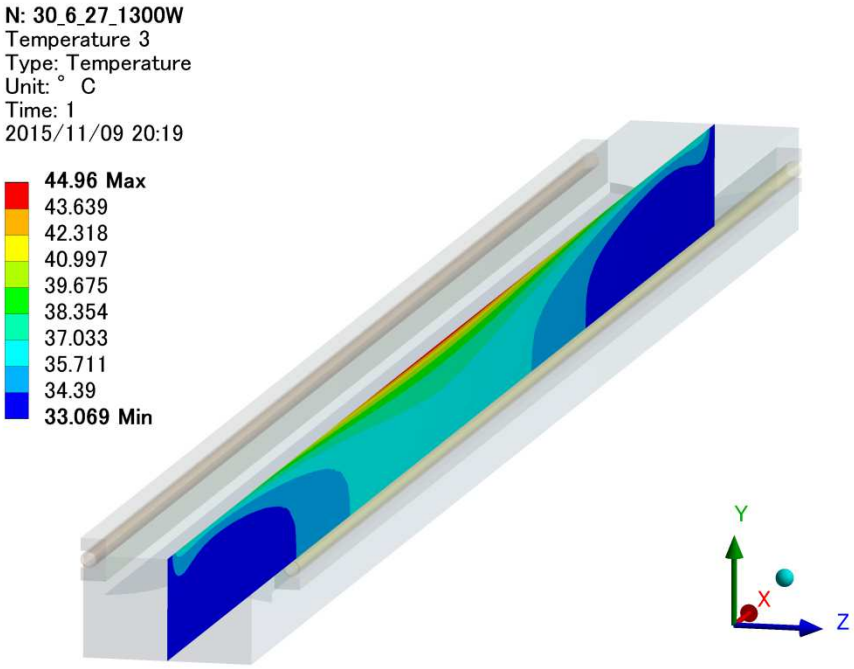

Fig. 4.1.1(b) Sectional view of Temperature profile

4.1.2 Deformation profile of model 1 for tangential direction

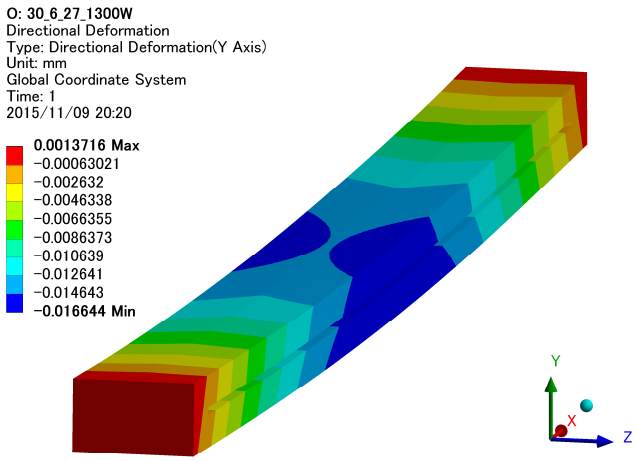

Fig. 4.1.2 (a) Directional deformation (Y Axis)

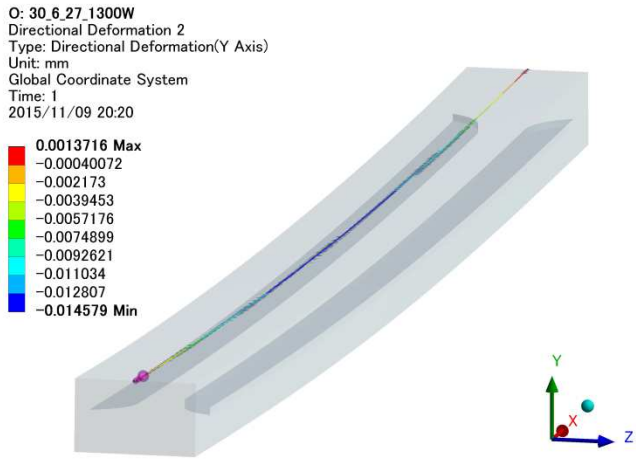

Fig. 4.1.2 (b) LINE ①(Y Axis)

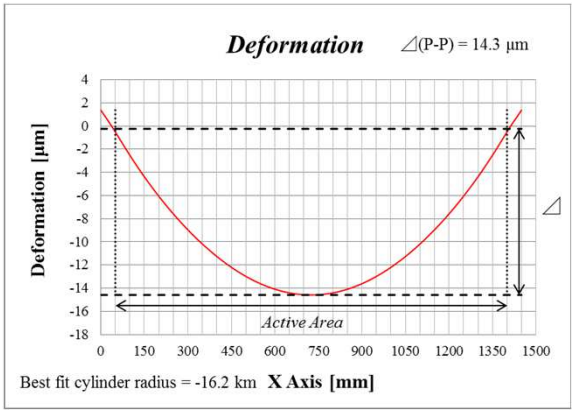

Fig. 4.1.2 (c) Deformation along LINE ①

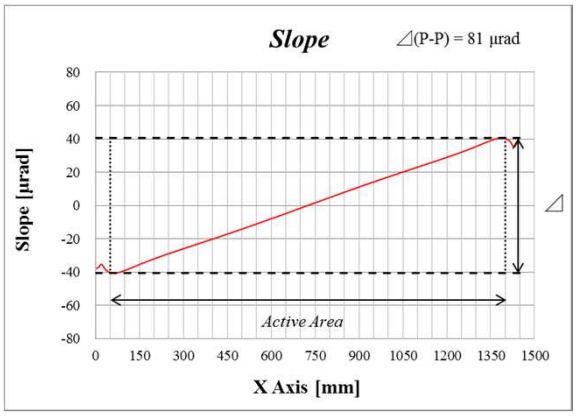

Fig. 4.1.2 (d) Slope along LINE ①

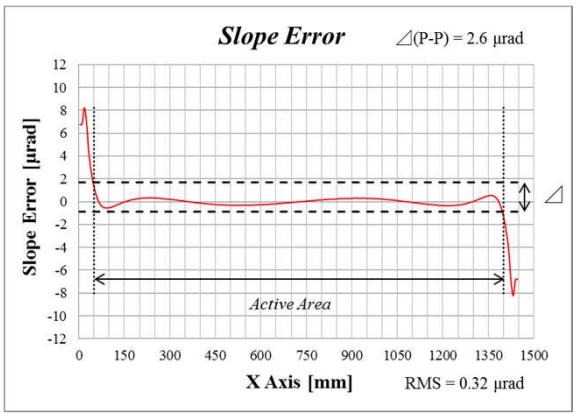

Fig. 4.1.2 (e) Slope error along LINE ①

4.1.3 Deformation profile of model 1 for Sagittal direction

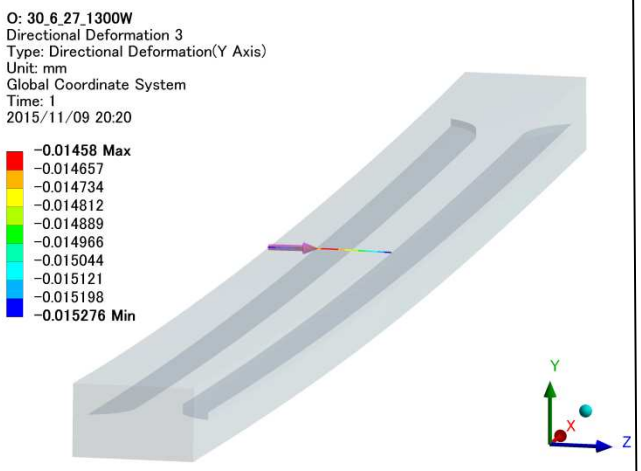

Fig. 4.1.3.1 (a) LINE ②(Y Axis)

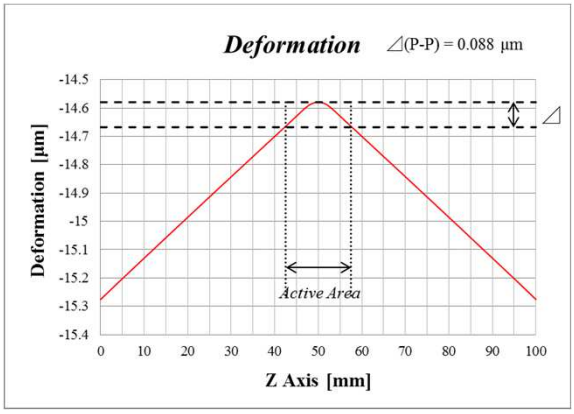

Fig. 4.1.3.1 (b) Deformation along LINE ②

Fig. 4.1.3.1 (c) Slope along LINE ②

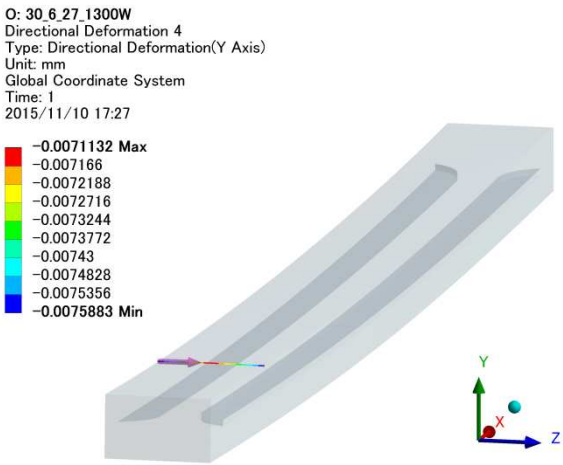

Fig. 4.1.3.2 (a) LINE ③(Y Axis)

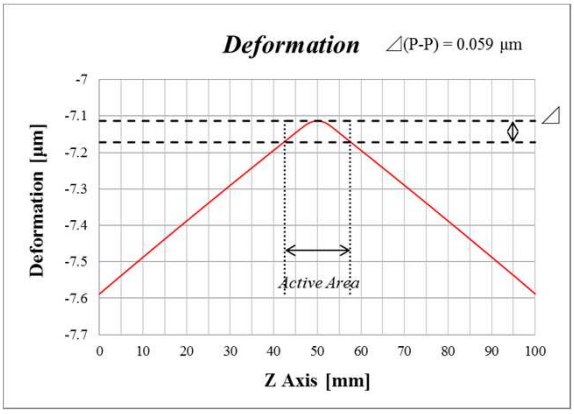

Fig. 4.1.3.2 (b) Deformation along LINE ③

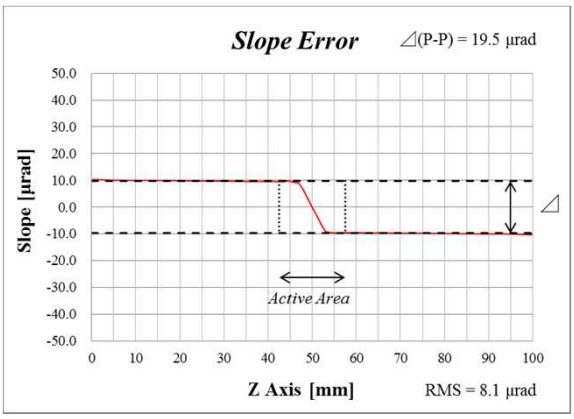

Fig. 4.1.3.2 (c) Slope along LINE ③

4.2 model 2 (heat input : 2600 W)

4.2.1 Temperature profile

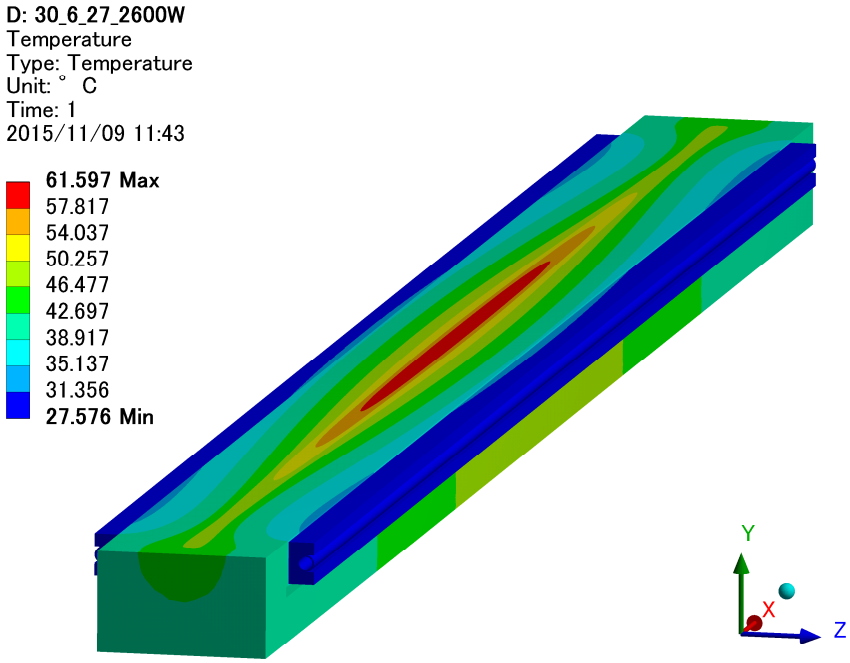

Fig. 4.2.1 (a) Temperature profile

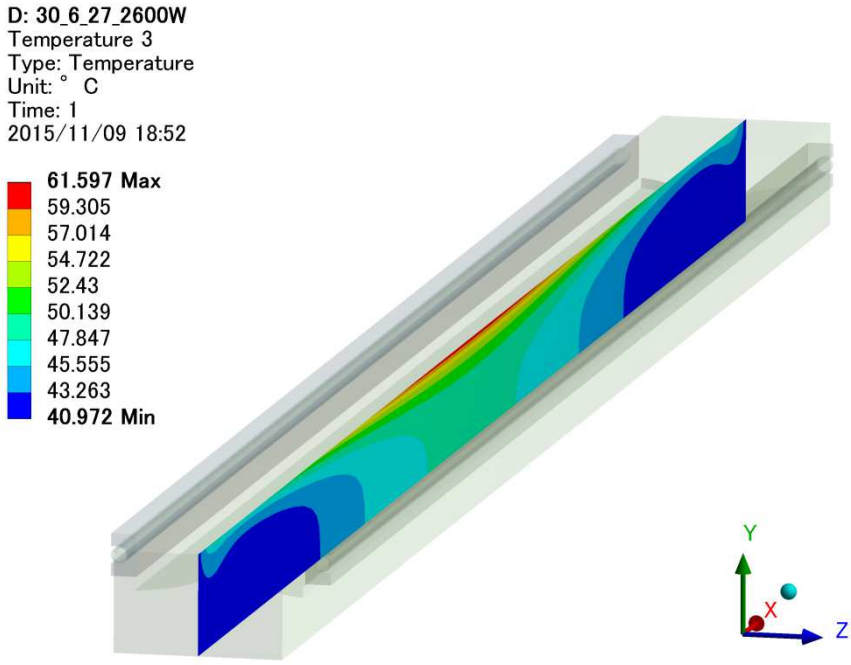

Fig. 4.2.1 (b) Sectional view of Temperature profile

4.2.2 Deformation profile of model 2 for Tangential direction

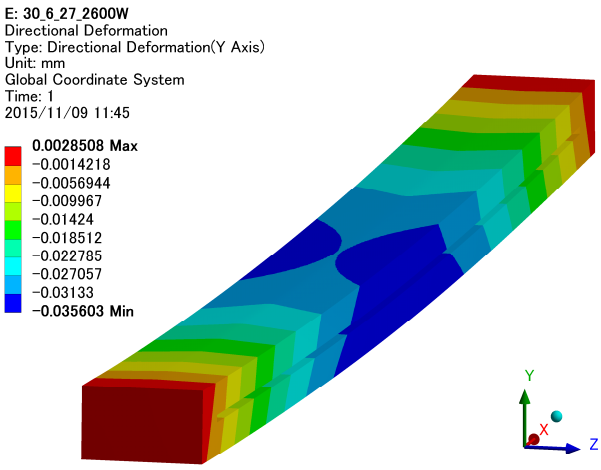

Fig. 4.2.2 (a) Directional deformation (Y Axis)

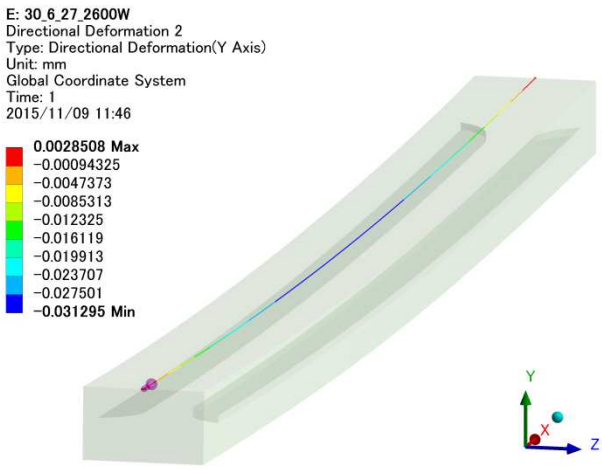

Fig. 4.2.2 (b) LINE ①(Y Axis)

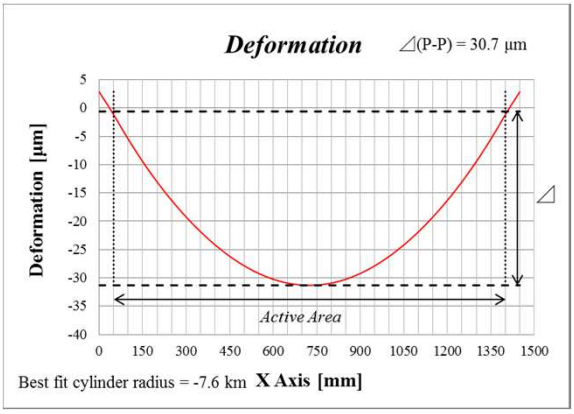

Fig. 4.2.2 (c) Deformation along LINE ①

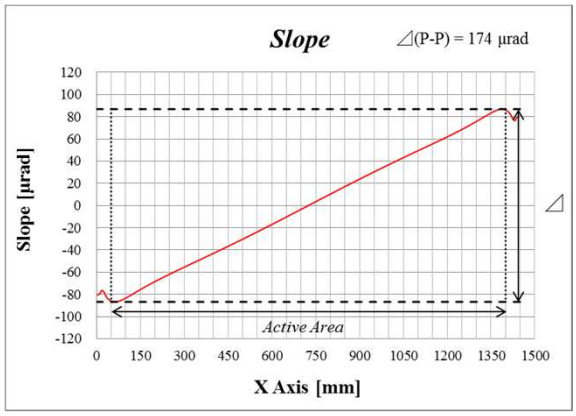

Fig. 4.2.2 (d) Slope along LINE ①

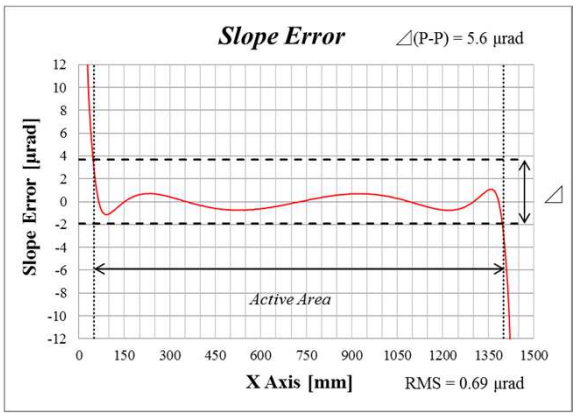

Fig. 4.2.2 (e) Slope error along LINE ①

4.2.3 Deformation profile of model 2 for Sagittal direction

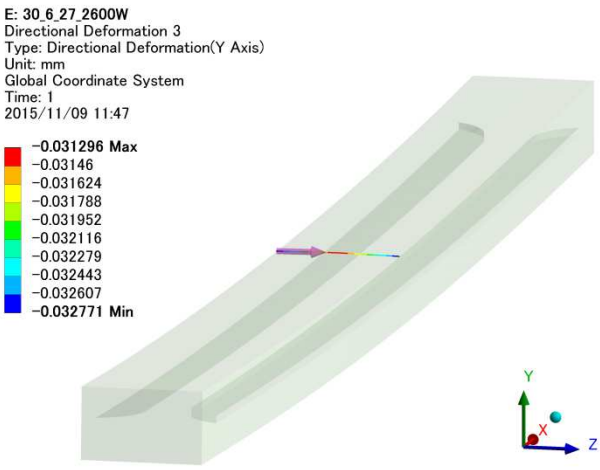

Fig. 4.2.3.1 (a) LINE ② (Y Axis)

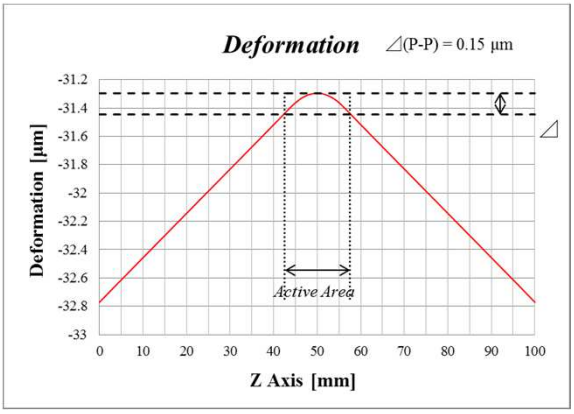

Fig. 4.2.3.1 (b) Deformation along LINE ②

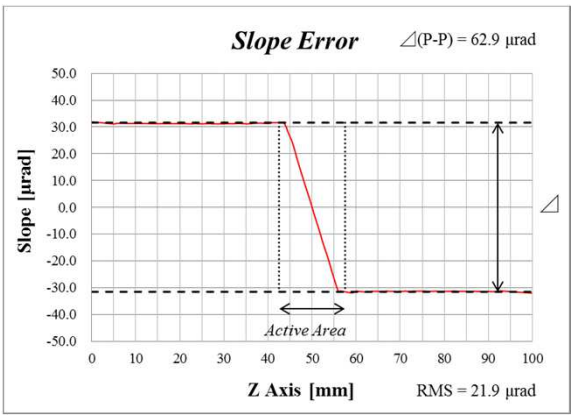

Fig. 4.2.3.1 (c) Slope along LINE ②

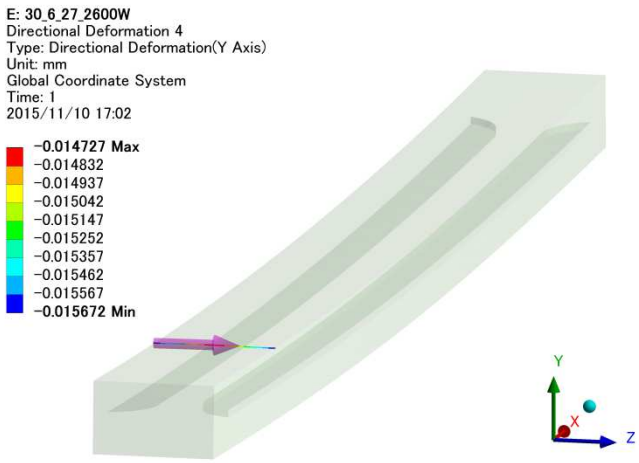

Fig. 4.2.3.2 (a) LINE ③(Y Axis)

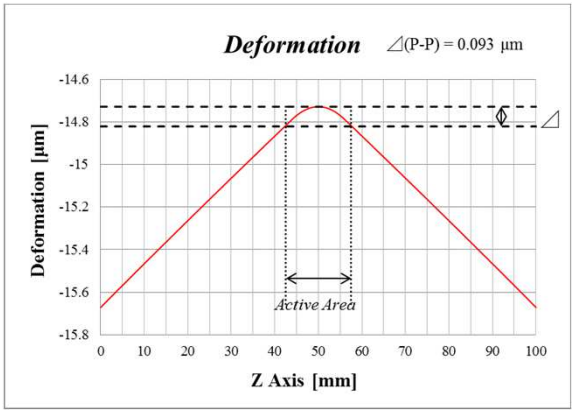

Fig. 4.2.3.2 (b) Deformation along LINE ③

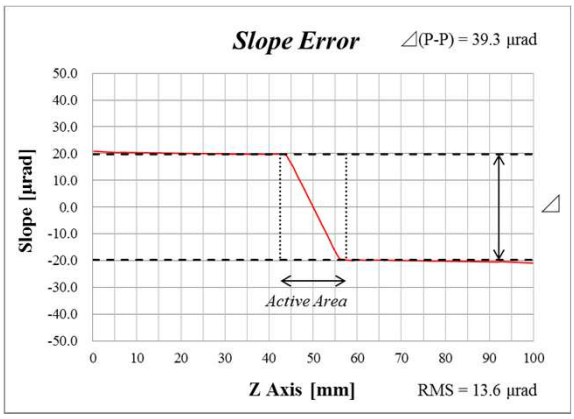

Fig. 4.2.3.2 (c) Slope along LINE ③

NSLS 2 FXI Collimating mirror

Thermo-Structural Analysis

- Thermal contact conductance 7500 W/m^2・K
- Synchrotron light irradiates the Cr surface

TOYAMA Co., Ltd

Created by : Tsubota

Date : Nov. 11, 2015

1. Scope

We have performed the thermo-structural analysis of the collimating mirror of NSLS 2 FXI beamline to evaluate the mirror deformation and slope error. In this report, we have calculated the notch model. The analysis was done with using the FEA software ANSYS 16.0 Mechanical.

Table 1.1 shows the analysis model. We have analyzed current scenario(model 1) and upgrade scenario(model 2). The analysis results are summarized in Table 1.2. These analysis results show the slope errors for tangential direction is enough small.

	Analysis conditions	
Distance from the source	**29.5** m	
Coating material	**Cr**	
	model 1	model 2
Beam size (H [mm] ×V [mm])	**6.2 × 1408**	**12.1 × 1408**
Total Absorbed Power	**992** W	**1936** W

Table 1.1. Analysis models

		model 1		model 2	
Tangential Direction (LINE ①)	Deformation(⊿P-P)	**7.4**	μm	**15.0**	μm
	*Slope Error (RMS)	**0.36**	μrad	**0.72**	μrad
	Radius of curvature	**-31.3**	km	**-15.4**	km
Sagittal Direction (LINE ②)	Deformation(⊿P-P)	**0.087**	μm	**0.15**	μm
	Slope Error (RMS)	**9.6**	μrad	**16.1**	μrad
Substrate material : Si					

*Slope error (RMS) = Calculated from the best fit cylinder removed data.

Table 1.2. Analysis Summary

2. Dimensional drawing

Fig. 2.1, 2.2 and 2.3 show the dimensional drawing of the collimating mirror.

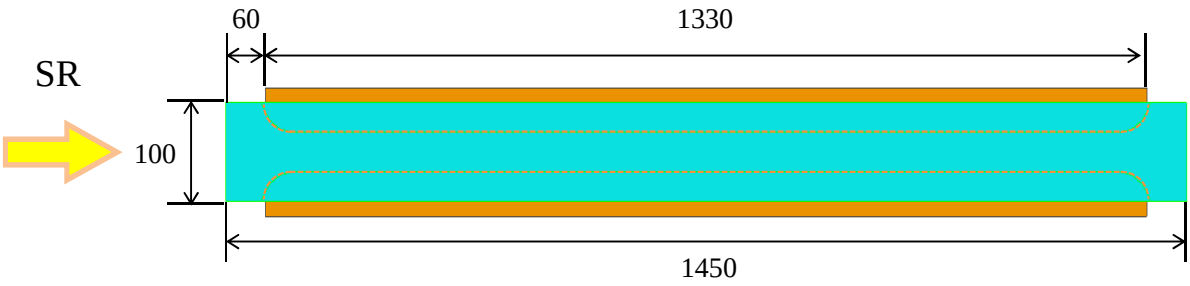

Fig. 2.1 Top view

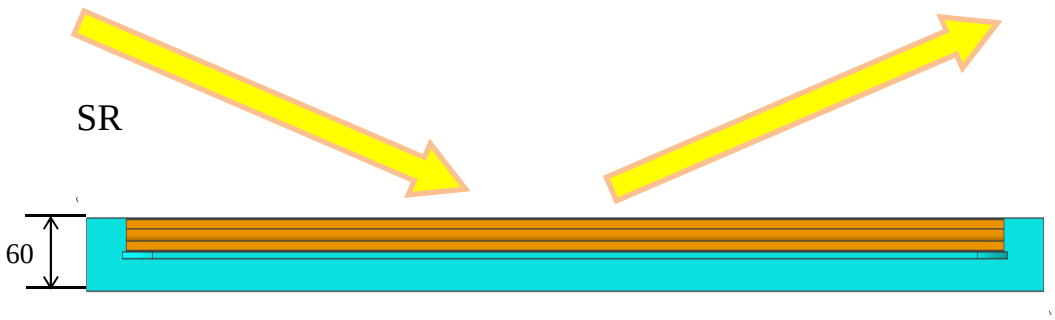

Fig. 2.2 Side view

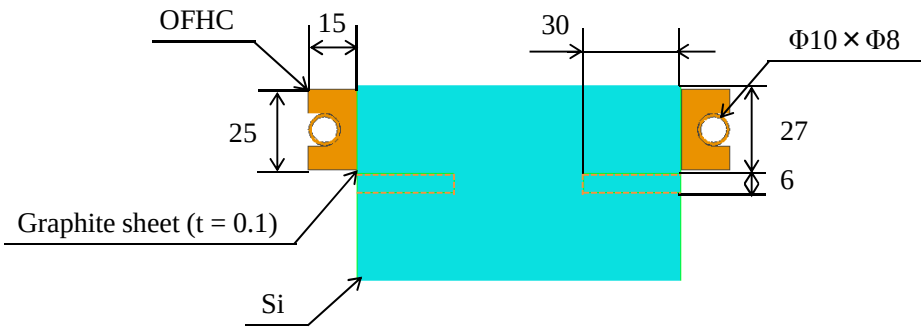

Fig. 2.3 Front view

3. Boundary conditions

3.1 For thermal analysis

Fig. 3.1.1 and Fig. 3.1.2 show heat flux profile and heat input area. The power map calculation was done by using SPECTRA software*. The yellow surface in Fig. 3.1.3 shows the convection surface. Table 3.1 shows the boundary conditions for thermal analysis. The detail of power map applied to the fixed mask is shown in Page 6.

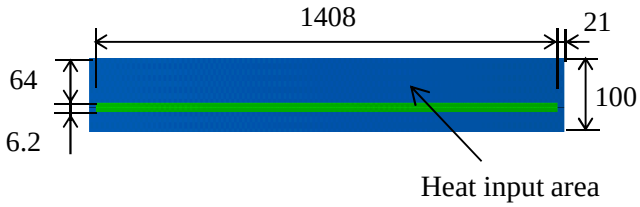

Fig. 3.1.1 Heat input area (model 1)

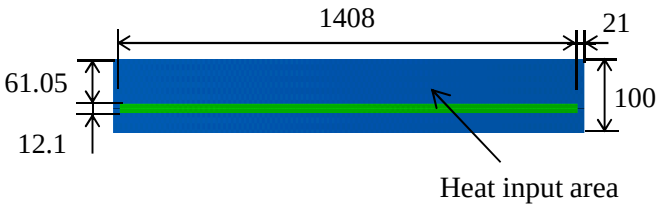

Fig. 3.1.2 Heat input area (model 2)

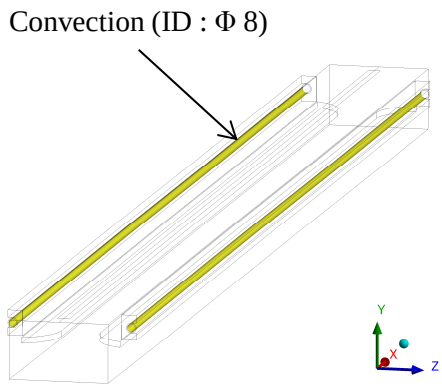

Fig. 3.1.3 convection surface

	Analysis Conditions	
Cooling Water temperature	**25.0**	℃
Distance from the source	**29.5**	m
Incident Angle	**4.4**	mrad
	model 1	model 2
Total absorbed power	**992** W	**1936** W
Maximum heat flux	**0.152** W/mm^2	**0.152** W/mm^2
Footprint (H mm × V mm)	**6.2 × 1408**	**12.1 × 1408**
Convection coefficient	**9000**	W/m^2・K
Flow rate	**6.0**	L/min
Flow velocity	**2.0**	m/s
Pipe inner diameter	**8**	mm
Cooling water pressure loss	**0.035**	MPa
Thermal contact conductance between Si and OFHC	**7500**	W/m^2・K

Table 3.1 Analysis Conditions

3. Boundary conditions

3.2 For Static structural analysis

Fig. 3.2 shows the support boundary conditions. We assumed that the graphite sheet do not combine Si and OFHC, so the structural analysis was done by using Fig. 3.2 model. All boundary conditions for static structural analysis is shown in Table 3.2.

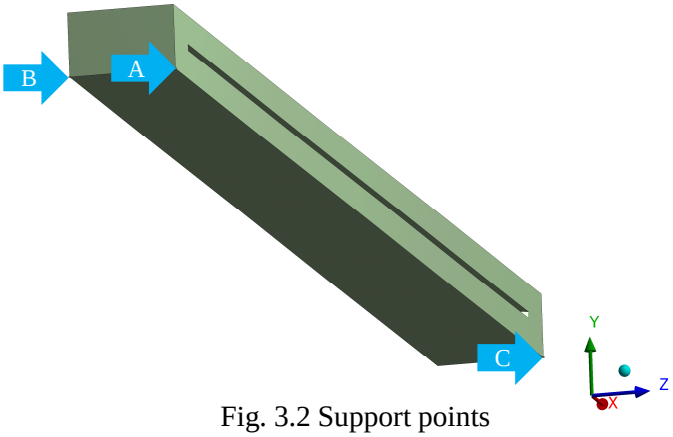

Fig. 3.2 Support points

	Analysis Conditions	
Point A	**Fixed : X, Y, Z Axis**	
Point B	**Fixed : X, Y Axis**	**Free : Z Axis**
Point C	**Fixed : Y Axis**	**Free : X, Z Axis**
Reference temperature	**25.0**	℃

Table. 3.2 Support boundary conditions

3.3 Mesh model

Fig. 3.3 shows the mesh model used for analysis.

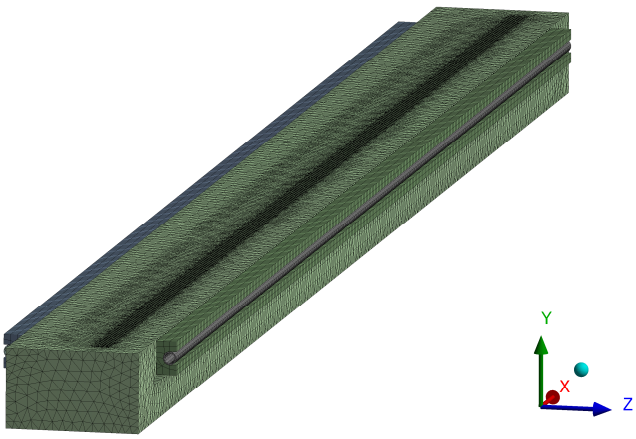

Fig. 3.3 Mesh model

3. Boundary conditions

3.4 Physical properties of materials

Table 3.4 shows the physical properties of materials used for analysis.

	Density	Young's modulus	Poisson's ratio	Thermal Expansion	Thermal Conductivity
Si	2330 kg/m³	1.65E+11 Pa	0.26	2.60E-06 1/K	148 W/m・K
OFHC	8940 kg/m³	1.18E+11 Pa	0.33	1.77E-05 1/K	391 W/m・K
Graphite sheet	850 kg/m³	1.08E+8 Pa	0.3	3.20E-05 1/K	*0.75W/m・K

・The thermal conductivity is adjusted to become the thermal contact conductance 7500 W/m²・K for the sheet thickness of 0.1 mm.

Table 3.4 Physical properties of materials

3.5 Schematic for the calculation lines

The Red lines in Fig. 3.5 show the calculation lines of surface slope(LINE ①-LINE ③).

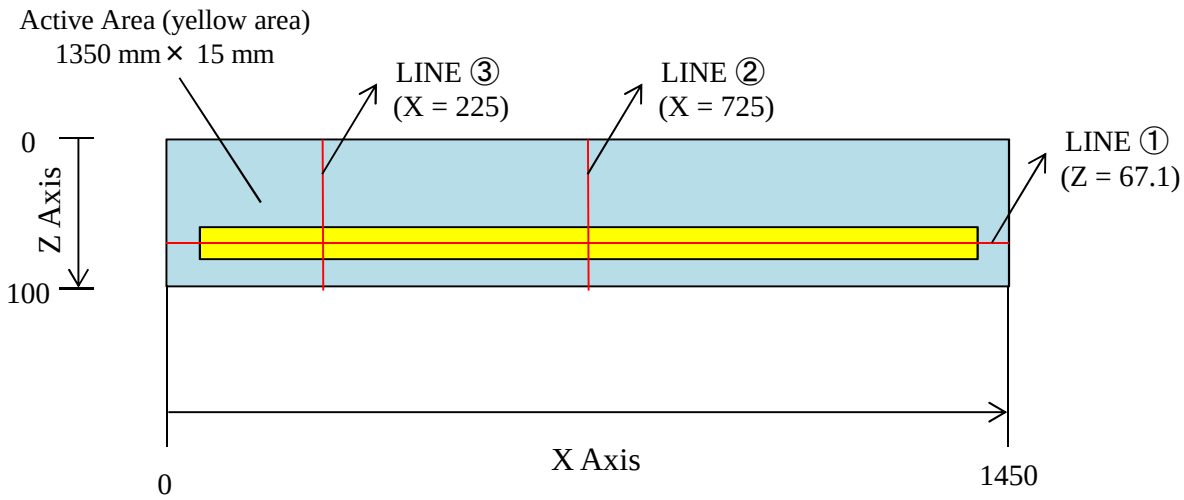

Fig. 3.5 Schematic for the calculation lines of surface slope

3. Boundary conditions

3.6 Power map calculation

The power map calculation was done by using *SPECTRA software. The Fig. 3.6.1 and Fig. 3.6.2 show the power map which applied for analysis. We assumed some of the synchrotron light is absorbed in collimating mirror. Table 3.6 show the heat balance sheet.

* T. Tanaka and H. Kitamura, J. Synchrotron Radiation 8 (2001) 1221.
Email : ztanaka@spring8.or.jp
URL : http://radiant.harima.riken.go.jp/spectra/index.html

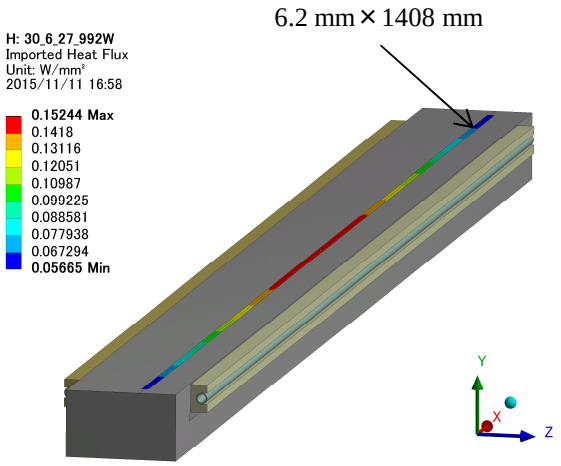

Fig. 3.6.1 The power map of model 1

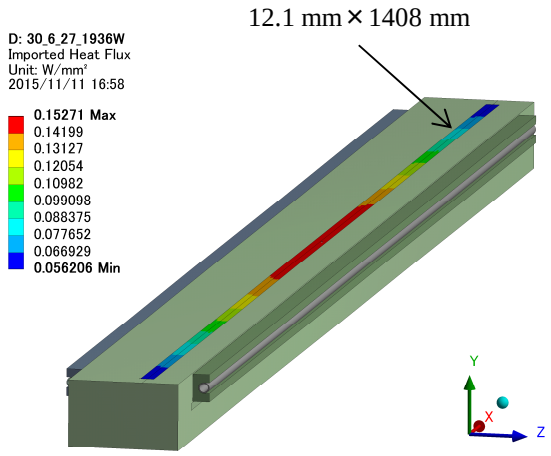

Fig. 3.6.2 The power map of model 2

Total power calculation		
Total absorbed power (model 1)	**992**	W
Total absorbed power (model 2)	**1936**	W

Table 3.6 Heat balance sheet

4. Analysis results

4.1 model 1 (heat input : 992 W)

4.1.1 Temperature profile

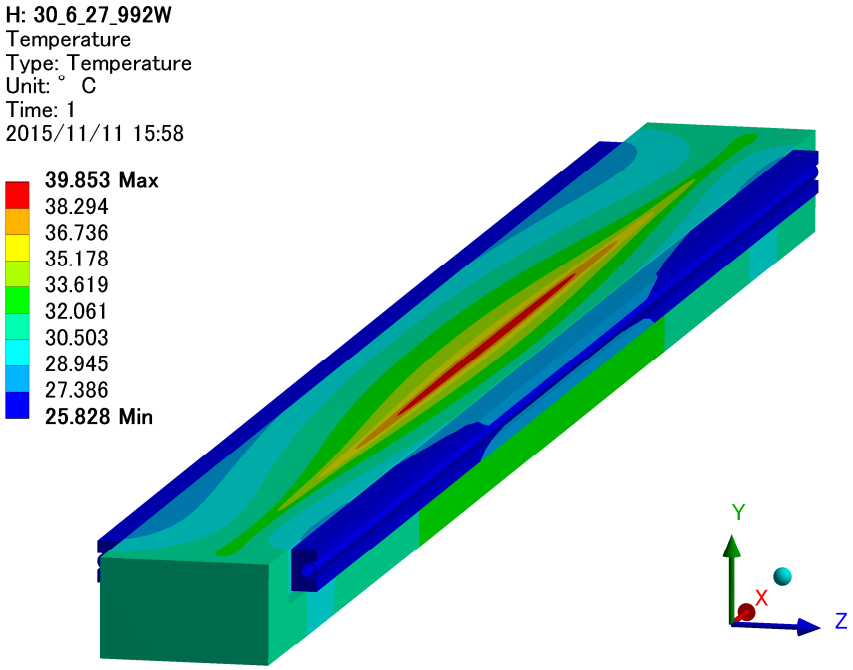

Fig. 4.1.1 (a) Temperature profile

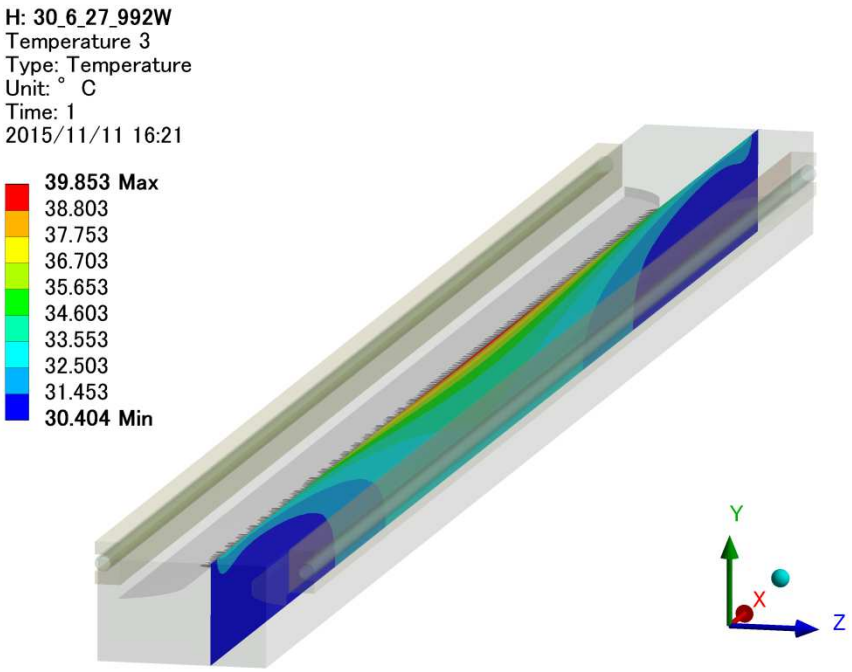

Fig. 4.1.1(b) Sectional view of Temperature profile

4.1.2 Deformation profile of model 1 for tangential direction

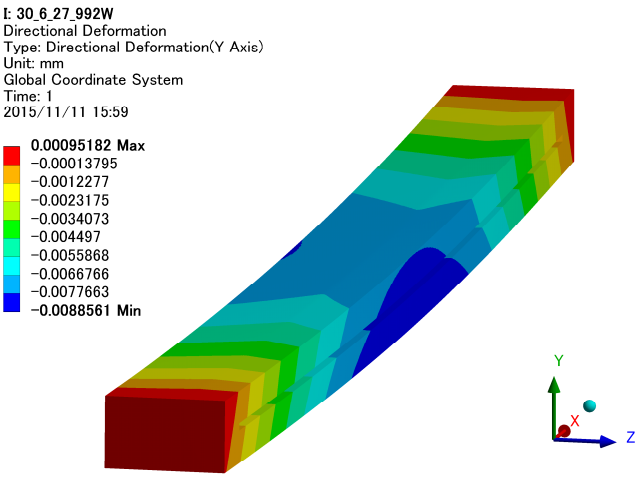

Fig. 4.1.2 (a) Directional deformation (Y Axis)

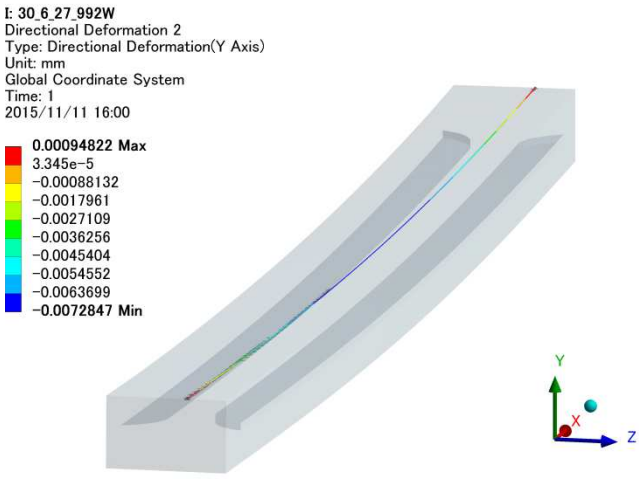

Fig. 4.1.2 (b) LINE ①(Y Axis)

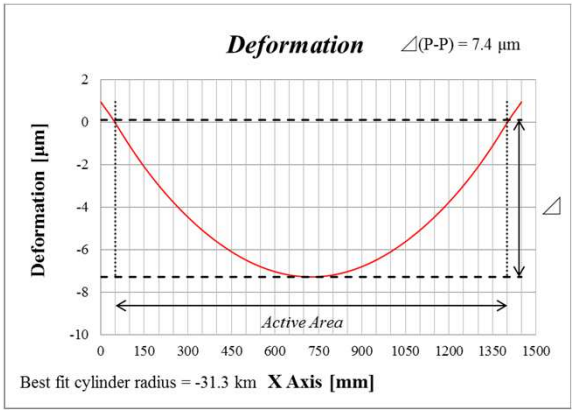

Fig. 4.1.2 (c) Deformation along LINE ①

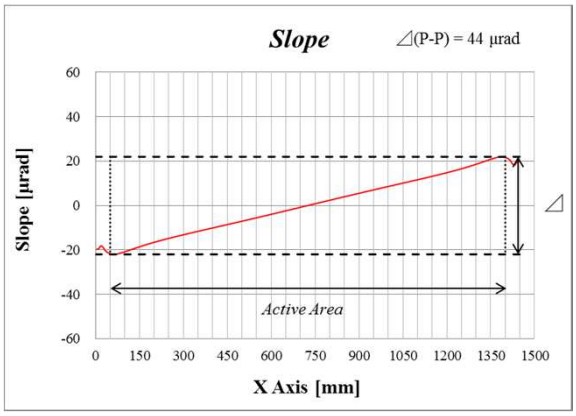

Fig. 4.1.2 (d) Slope along LINE ①

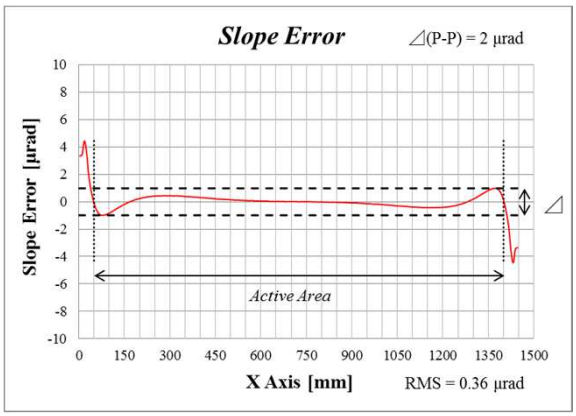

Fig. 4.1.2 (e) Slope error along LINE ①

4.1.3 Deformation profile of model 1 for Sagittal direction

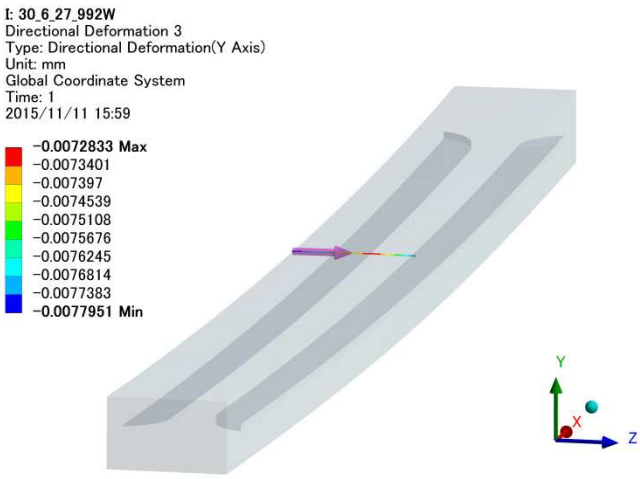

Fig. 4.1.3.1 (a) LINE ②(Y Axis)

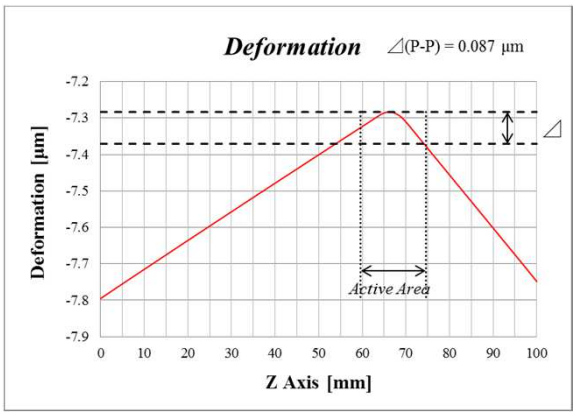

Fig. 4.1.3.1 (b) Deformation along LINE ②

Fig. 4.1.3.1 (c) Slope along LINE ②

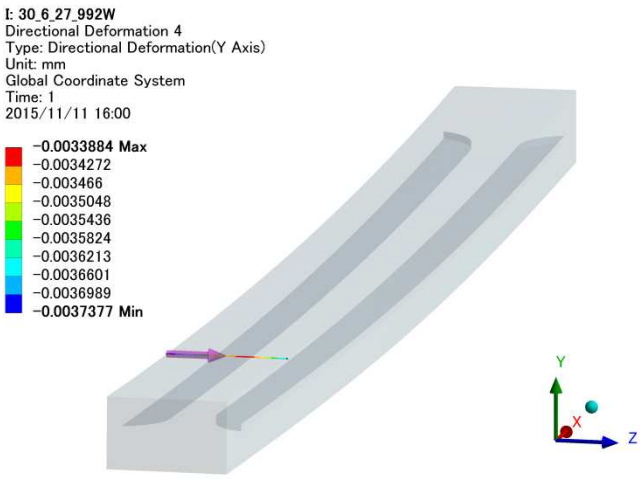

Fig. 4.1.3.2 (a) LINE ③(Y Axis)

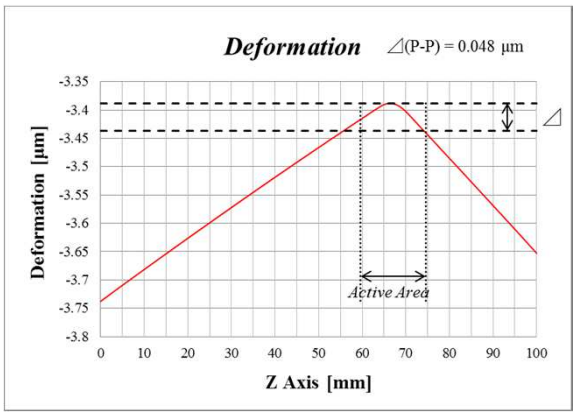

Fig. 4.1.3.2 (b) Deformation along LINE ③

Fig. 4.1.3.2 (c) Slope along LINE ③

4.2 model 2 (heat input : 1936 W)

4.2.1 Temperature profile

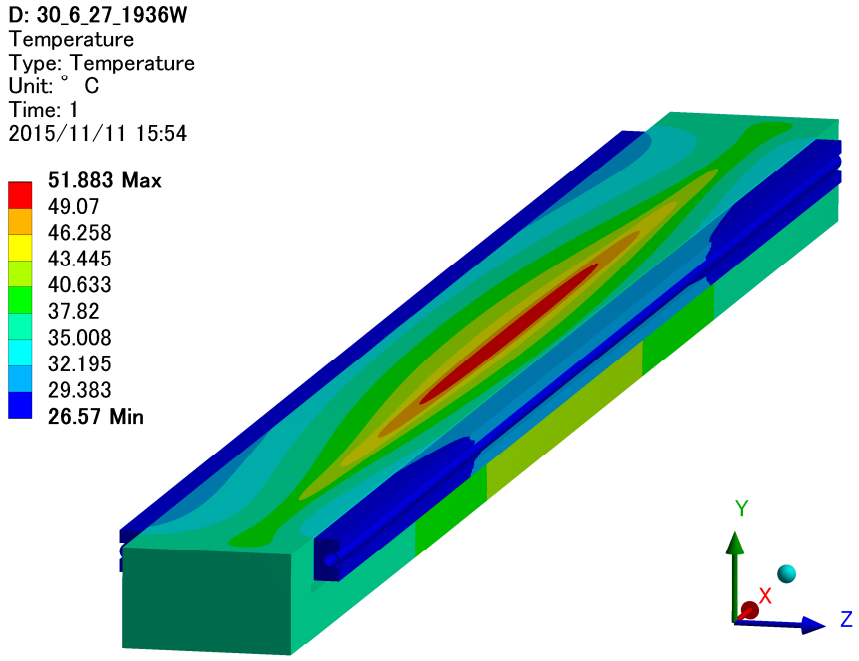

Fig. 4.2.1 (a) Temperature profile

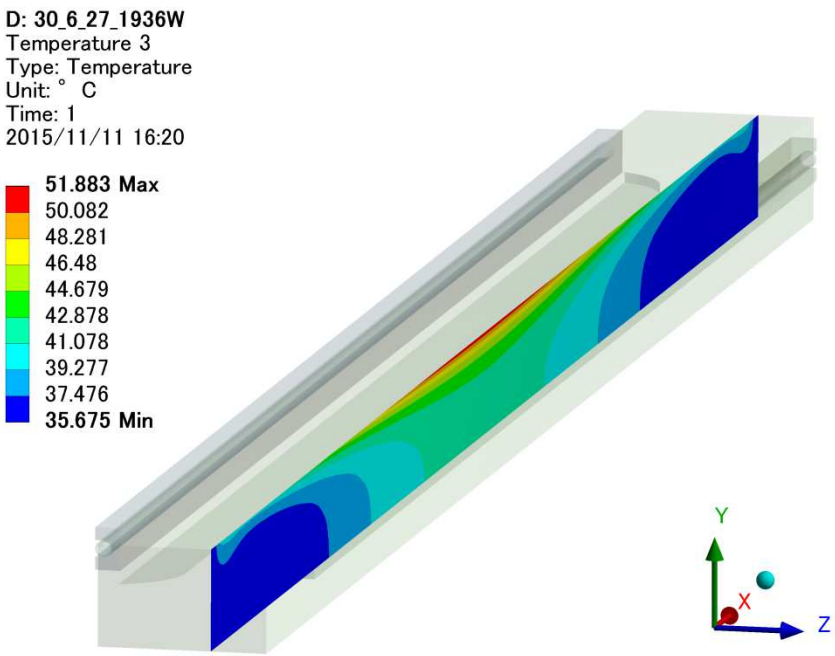

Fig. 4.2.1 (b) Sectional view of Temperature profile

4.2.2 Deformation profile of model 2 for Tangential direction

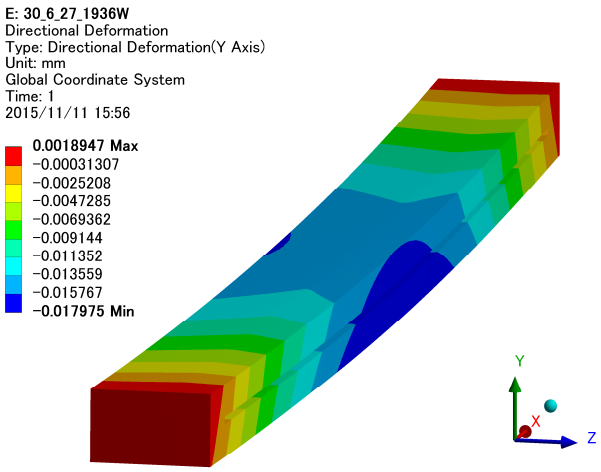

Fig. 4.2.2 (a) Directional deformation (Y Axis)

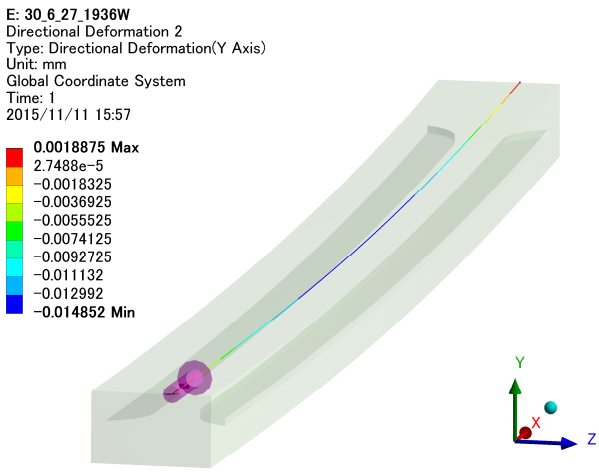

Fig. 4.2.2 (b) LINE ①(Y Axis)

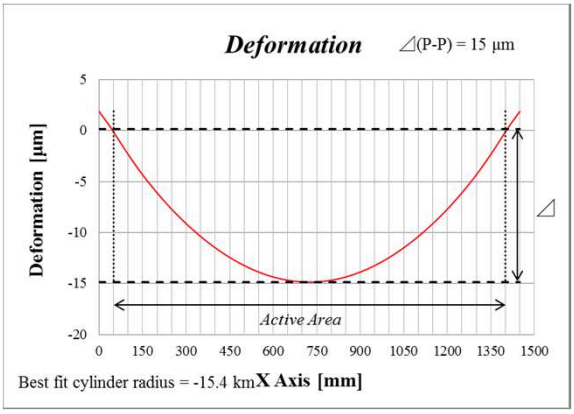

Fig. 4.2.2 (c) Deformation along LINE ①

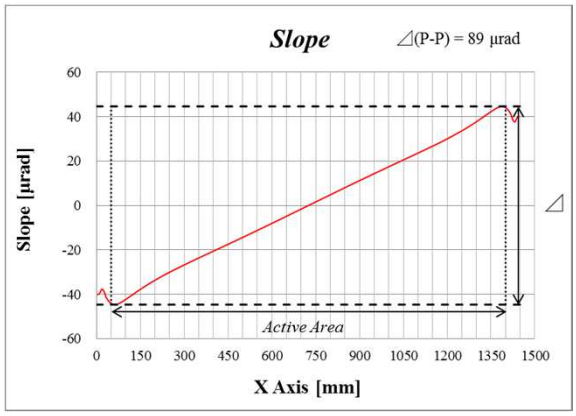

Fig. 4.2.2 (d) Slope along LINE ①

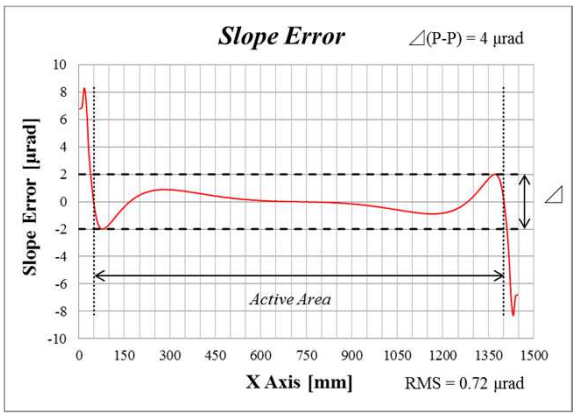

Fig. 4.2.2 (e) Slope error along LINE ①

4.2.3 Deformation profile of model 2 for Sagittal direction

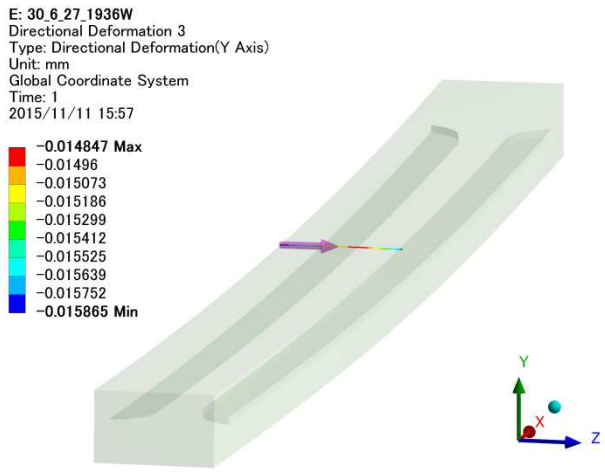

Fig. 4.2.3.1 (a) LINE ② (Y Axis)

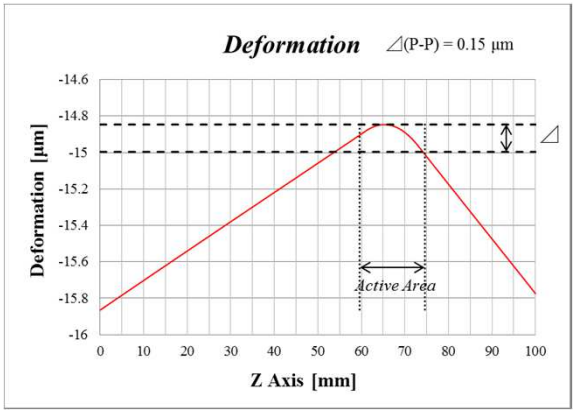

Fig. 4.2.3.1 (b) Deformation along LINE ②

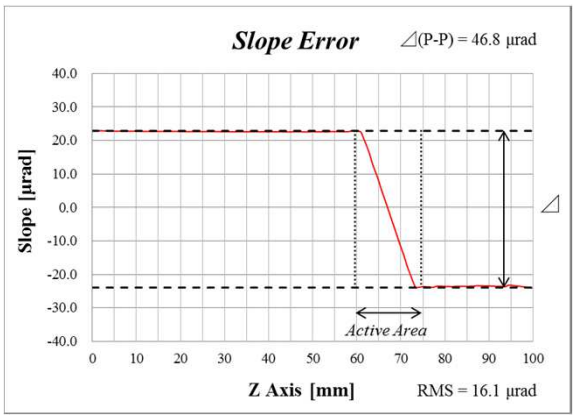

Fig. 4.2.3.1 (c) Slope along LINE ②

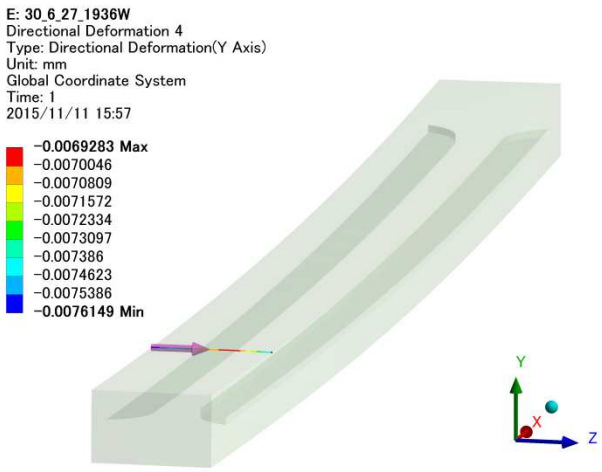

Fig. 4.2.3.2 (a) LINE ③(Y Axis)

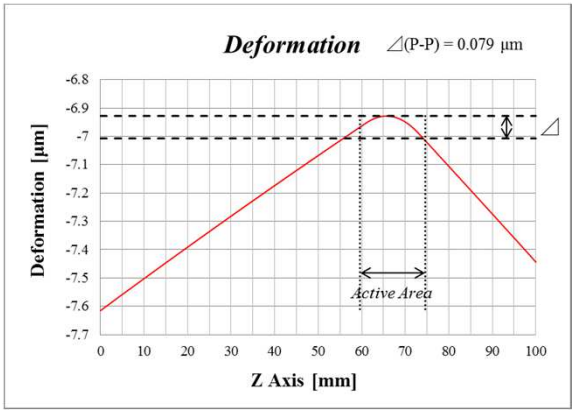

Fig. 4.2.3.2 (b) Deformation along LINE ③

Fig. 4.2.3.2 (c) Slope along LINE ③

NSLS 2 FXI Collimating Mirror

Pressure Vessel Structural analysis
- Vacuum and High inner pressure condition -

TOYAMA Co., Ltd

Date : Nov. 19, 2015

Created by : Hanashima

1. Scope

We have performed Pressure Vessel structural analysis of the Collimating mirror(CM) chamber of NSLS 2 FXI beamline to evaluate the deformation, stress and strain profiles. In this report, we assumed the High inner pressure is 15 psig when the vessel subject to back fill pressurization. The calculation was done by using ANSYS 16.0 Professional.

The analysis conditions are listed in Table 1.1. These values are cited from the Vacuum Consensus Guidelines (BNL-81715-2008-IR_Vacuum_Consensus_Guidelines_for_DOE_Labs). The more detail of the analysis conditions are written in Page 3 to 4.

Table 1.2 shows the analysis results. All these analysis results cleared the design criteria (BNL-81715-2008-IR).

	Vessel Pressure [Pa]		Gravity [m/s^2]
	Internal	External	
Vacuum condition	**0**	**101300**	**9.8**
High inner pressure condition	**103421 (15 psig)**	**0**	

Table 1.1 Analysis conditions

		Results	
Vacuum condition	Maximum deformation	**0.53**	mm
	Maximum Von Mises Stress	**68**	MPa
	Maximum Equivalent Elastic Strain	**0.03**	%
High inner pressure condition	Maximum deformation	**0.60**	mm
	Maximum Von Mises Stress	**72**	MPa
	Maximum Equivalent Elastic Strain	**0.04**	%
Substrate material		**SUS304L**	

Table 1.2 Results Summary

2. Dimensional drawing

Please see the dimensional drawing of the CM chamber in Fig. 2.1 and Fig. 2.2. The analysis was done by using these simplified model

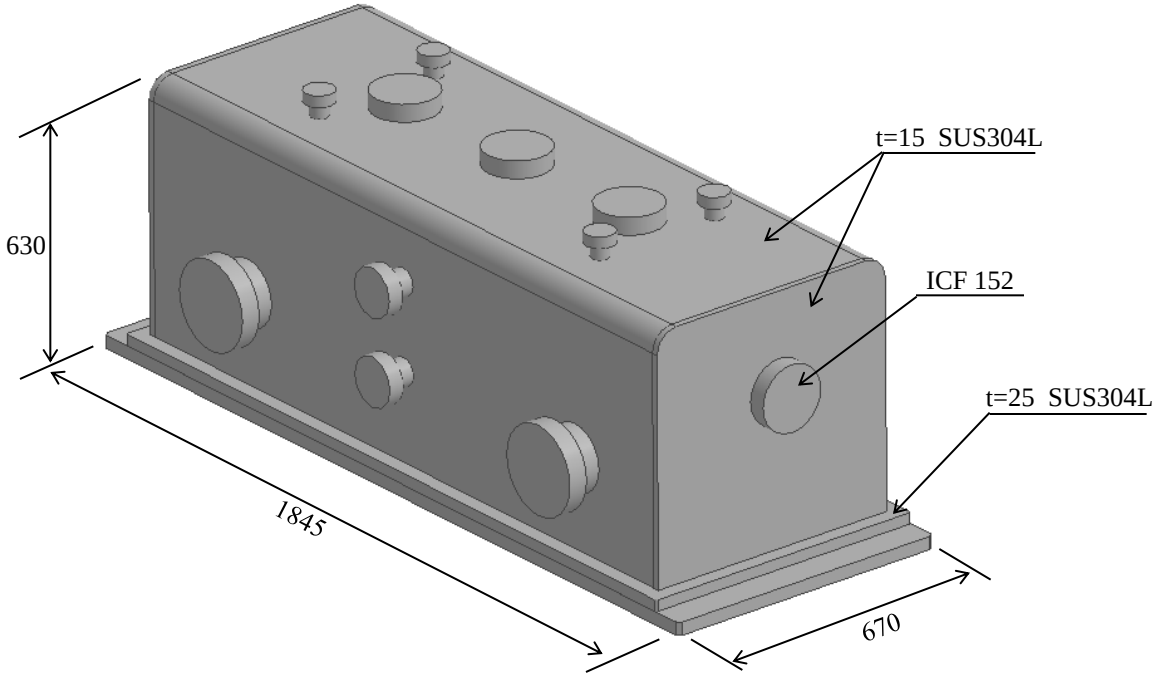

Fig. 2.1 Bird's eye view of chamber

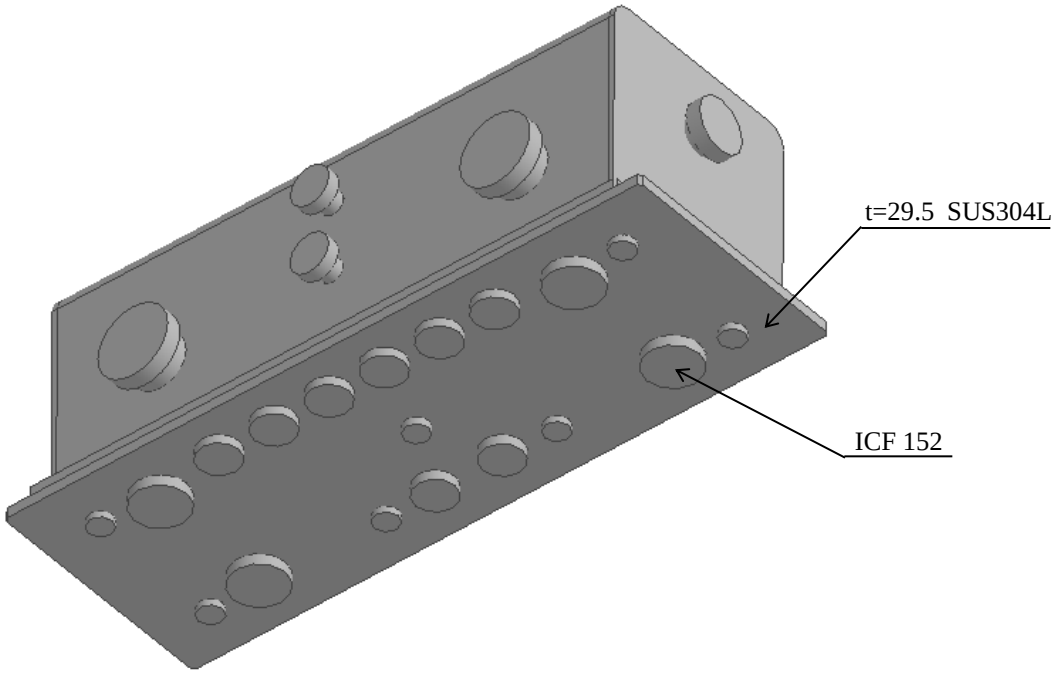

Fig. 2.2 Under view of chamber

3. Boundary conditions

3.1 For Static structural analysis

Fig. 3.1 shows the support points. All boundary conditions for static structural analysis is shown in Table 3.1.

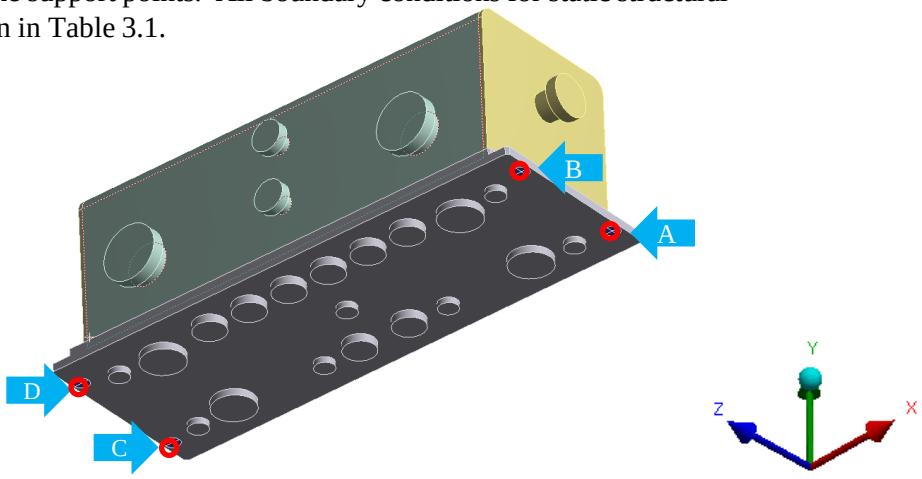

Fig. 3.2 Support Points

	Analysis Conditions
Surface A to D	**Fixed : X, Y, Z Axis**

Table 3.1 Support boundary conditions

3.2 Mesh model

Fig. 3.2 shows the mesh model used for analysis.

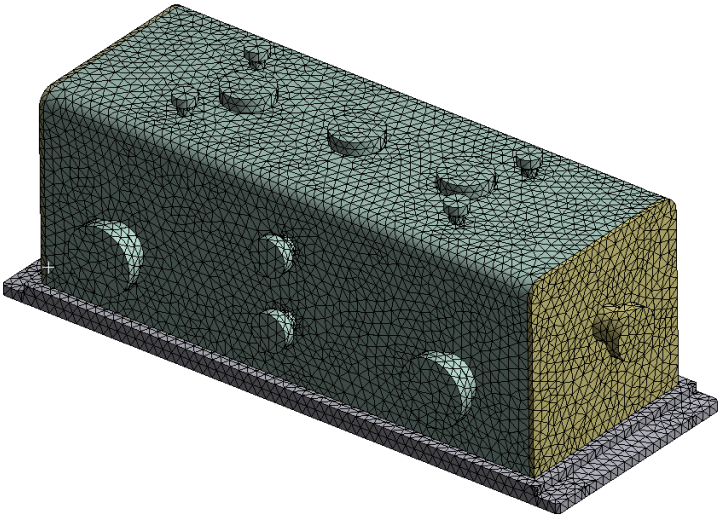

Fig. 3.2 Mesh model

3. Boundary conditions

3.3 Physical properties of materials

Table 3.3 shows the physical properties of materials used for analysis.

	Density	Young's modulus	Poisson's ratio
SUS304L	7930 kg/m³	1.93E+11 Pa	0.31

Table 3.4 Physical properties of materials

3.4 Pressure condition

The pressure condition s are as below.

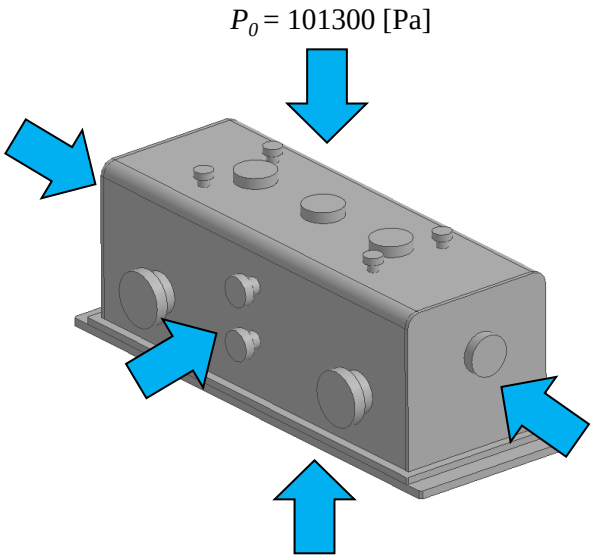

Fig. 3.5.1 Vacuum condition

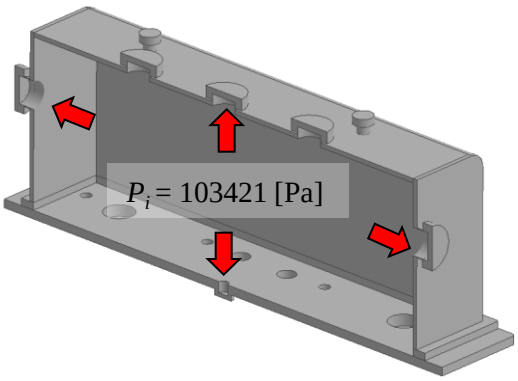

Fig. 3.5.2 High inner pressure condition

4. Calculation results

4.1 Deformation profile – Vacuum condition

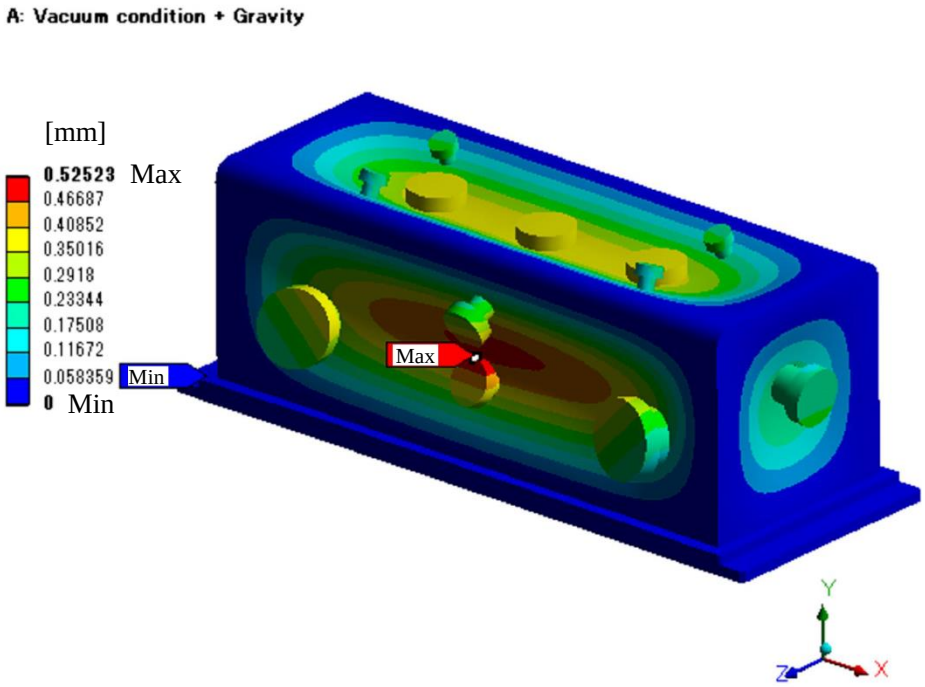

Fig. 4.1.1 Total deformation profile

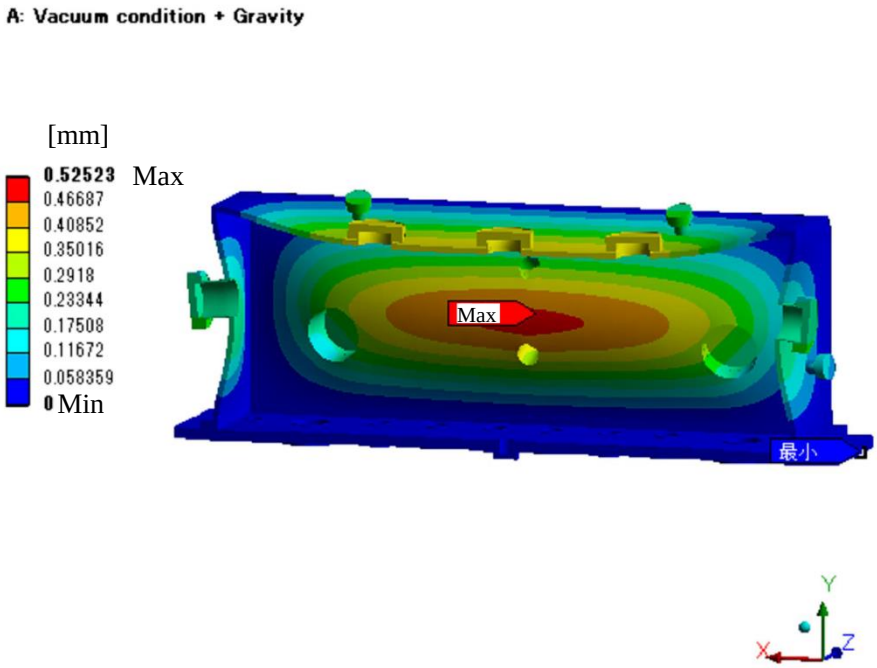

Fig. 4.1.2 Sectional view of total deformation profile

4.2 Stress profile – Vacuum condition

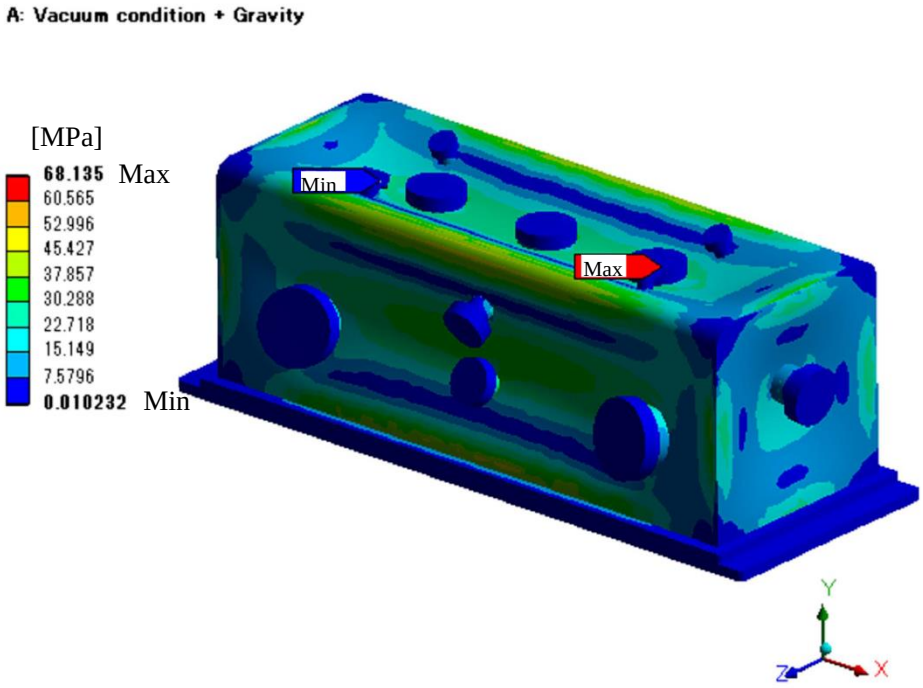

Fig. 4.2.1 Von Mises Stress profile

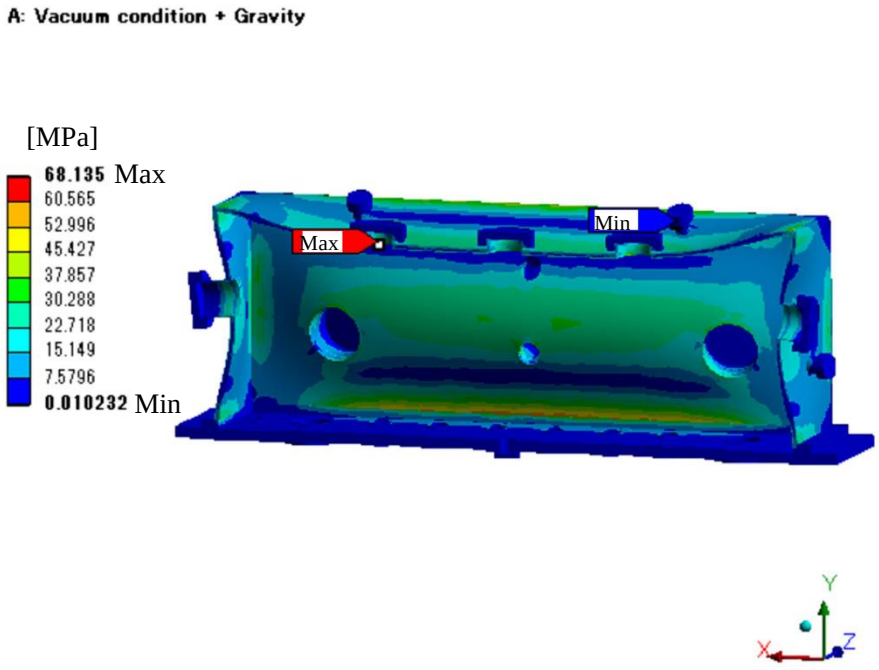

Fig. 4.2.2 Sectional view of Von Mises Stress profile

4.3 Elastic strain profile – Vacuum condition

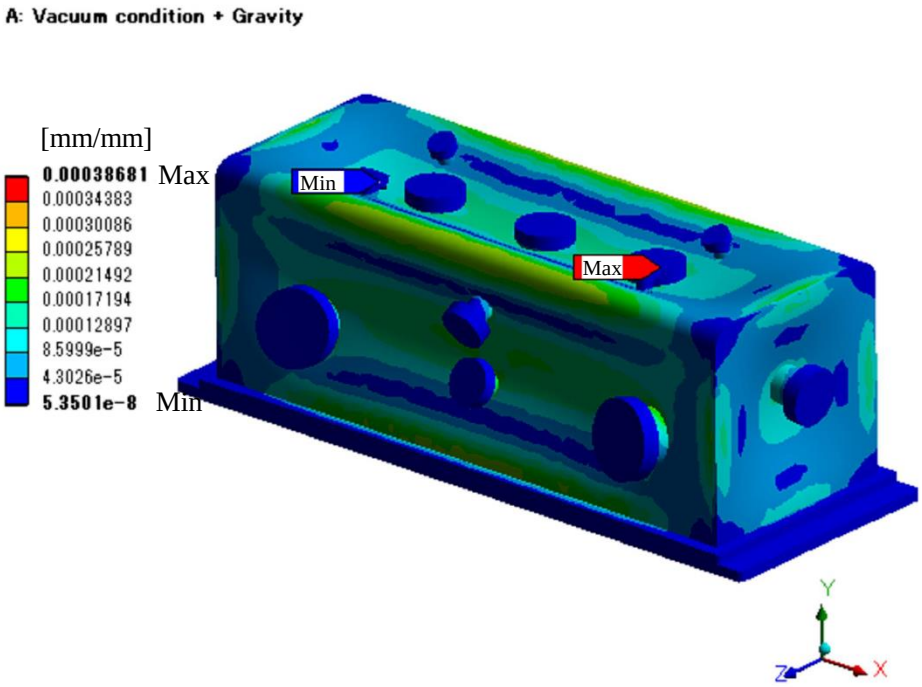

Fig. 4.3.1 Equivalent Elastic Strain profile

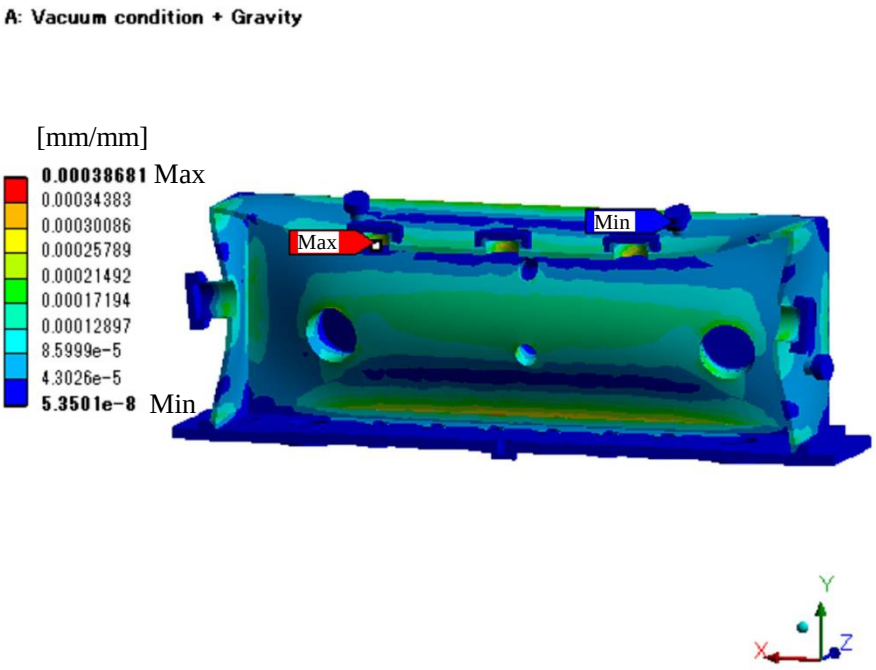

Fig. 4.3.2 Sectional view of Equivalent Elastic Strain profile

4. Calculation results

4.4 Deformation profile – High inner pressure condition

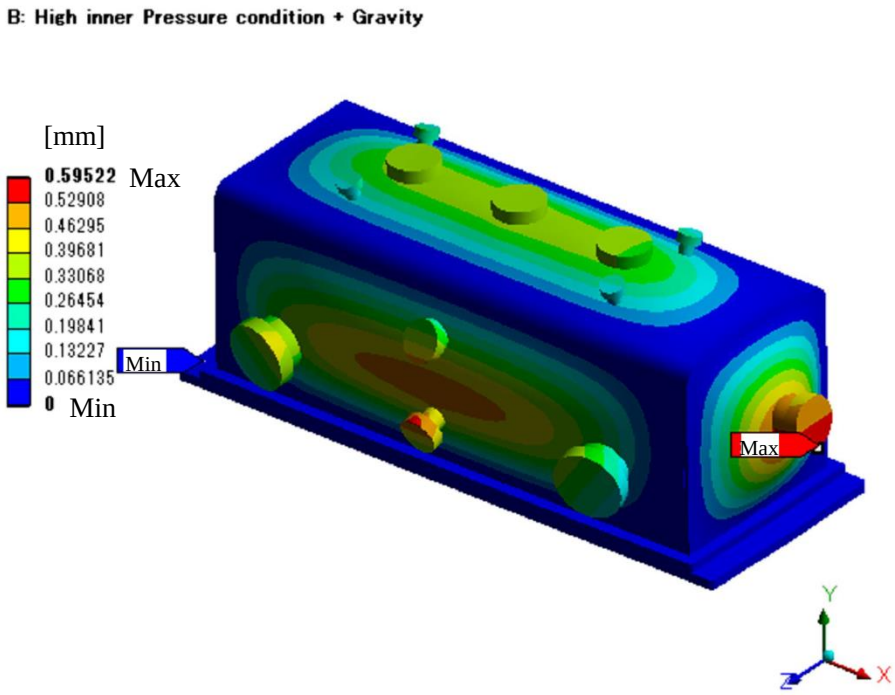

Fig. 4.4.1 Total deformation profile

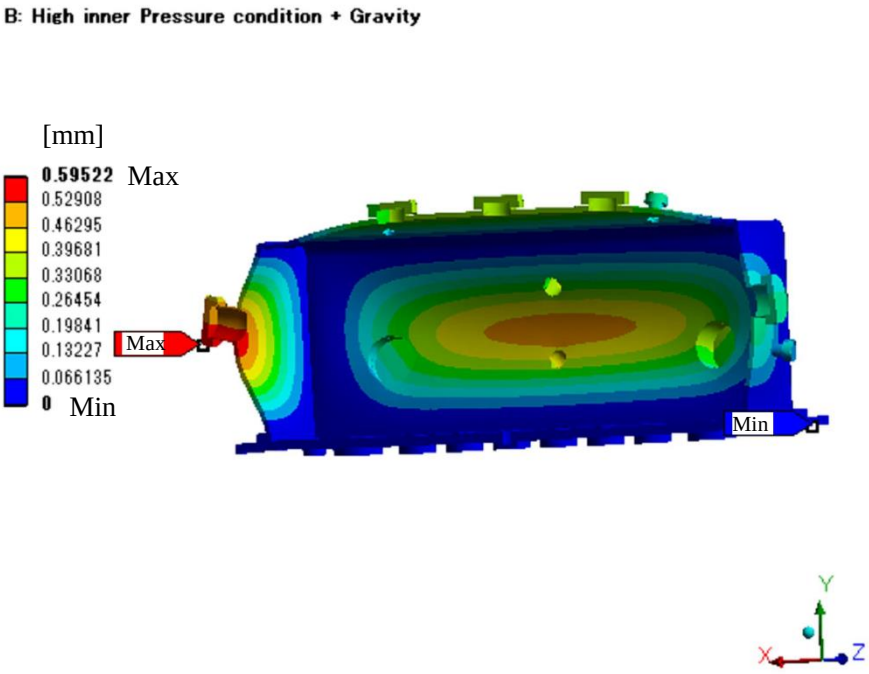

Fig. 4.4.2 Sectional view of total deformation profile

4.5 Stress profile – High inner pressure condition

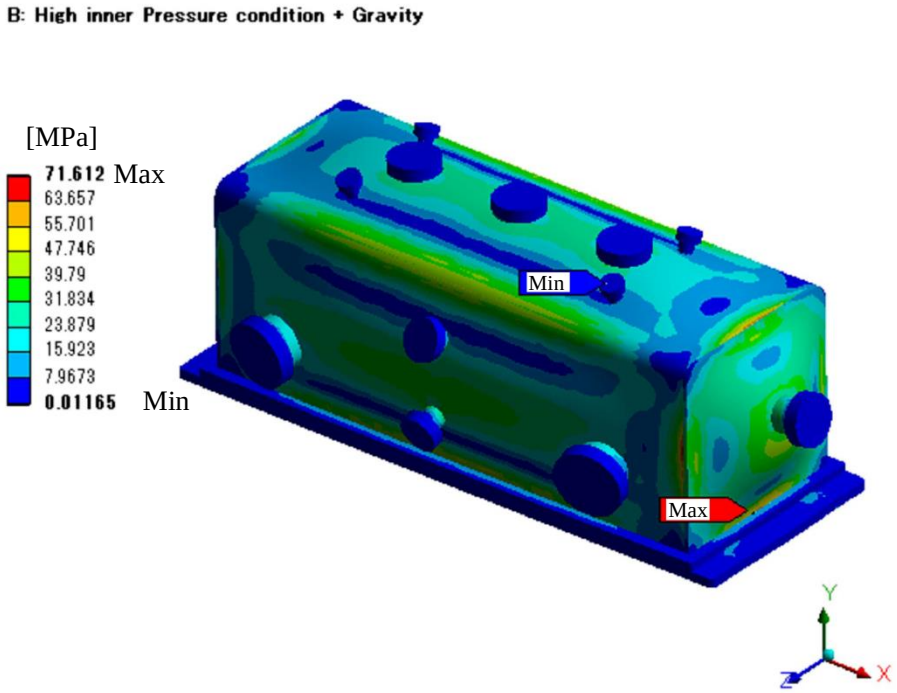

Fig. 4.5.1 Von Mises Stress profile

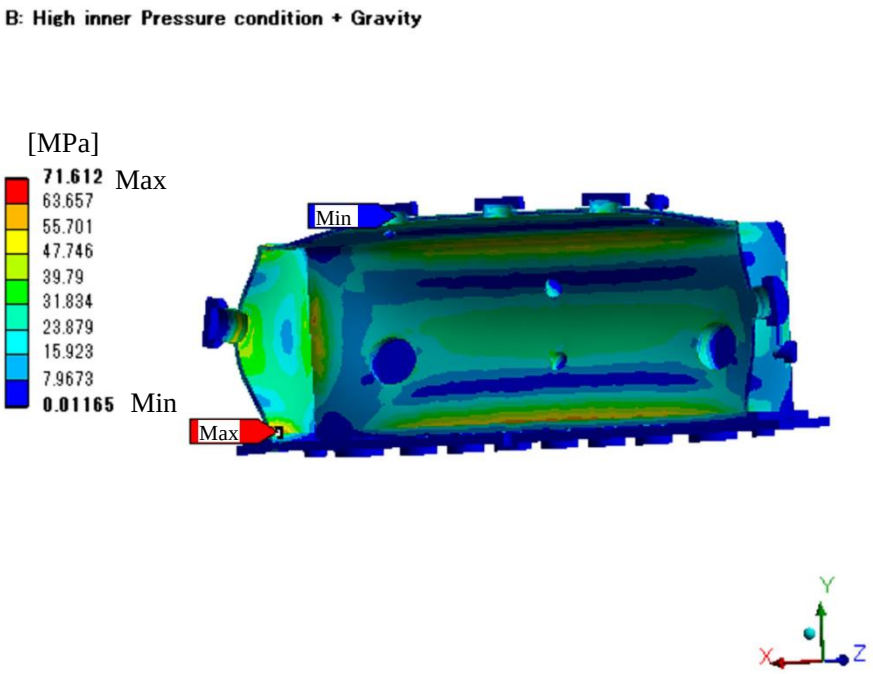

Fig. 4.5.2 Sectional view of Von Mises Stress profile

4.6 Elastic strain profile – High inner pressure

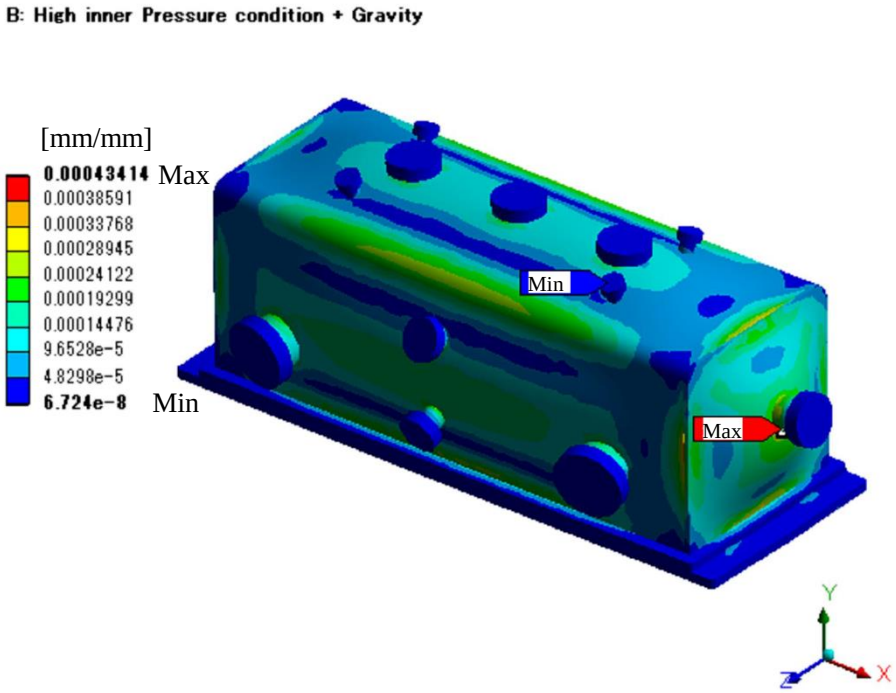

Fig. 4.6.1 Equivalent Elastic Strain profile

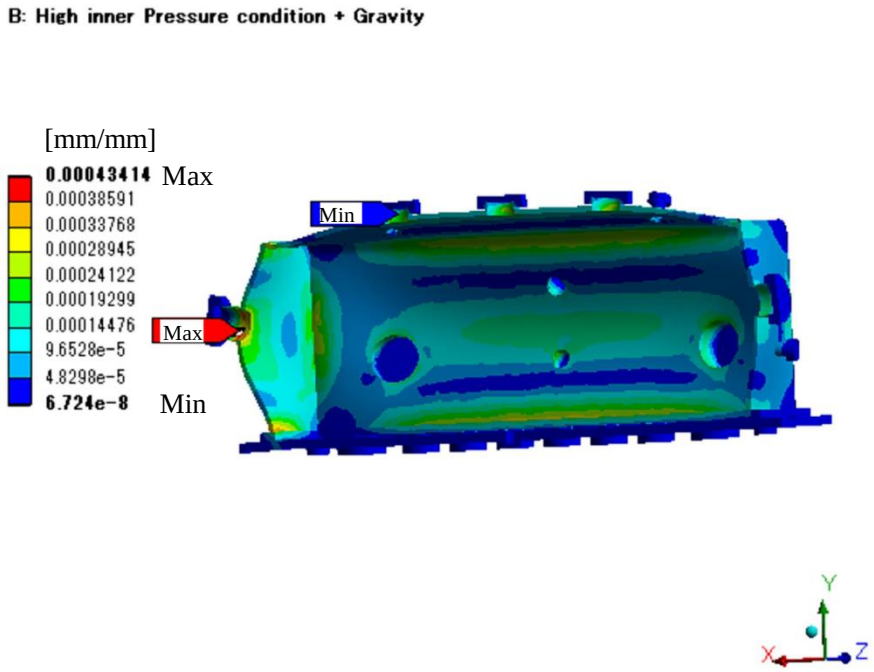

Fig. 4.6.2 Sectional view of Equivalent Elastic Strain profile

NSLS 2 FXI
Collimating mirror
Vibration Analysis

- Eigenvalue analysis

TOYAMA Co., Ltd
Created by : Tsubota
Date : Nov. 26, 2015

1. Scope

This document covers the vibration analysis of the Collimating mirror(CM) of FXI beamline at the NSLS 2 to evaluate the eigenvalue. The analysis was done with using Finite Element Analysis software ANSYS 16.0 Mechanical.
The analysis results are shown in Table 1. The analysis results show the first order eigenvalue exceeds 50Hz.

Mode Number	Frequency [Hz]
mode 1	**67.1**
mode 2	**98.4**
mode 3	**113.8**
mode 4	**116.1**
mode 5	**140.0**
mode 6	**142.3**

Table 1. Analysis results

2. The analysis model

Fig. 2.1 and Fig. 2.2 show the analysis model.

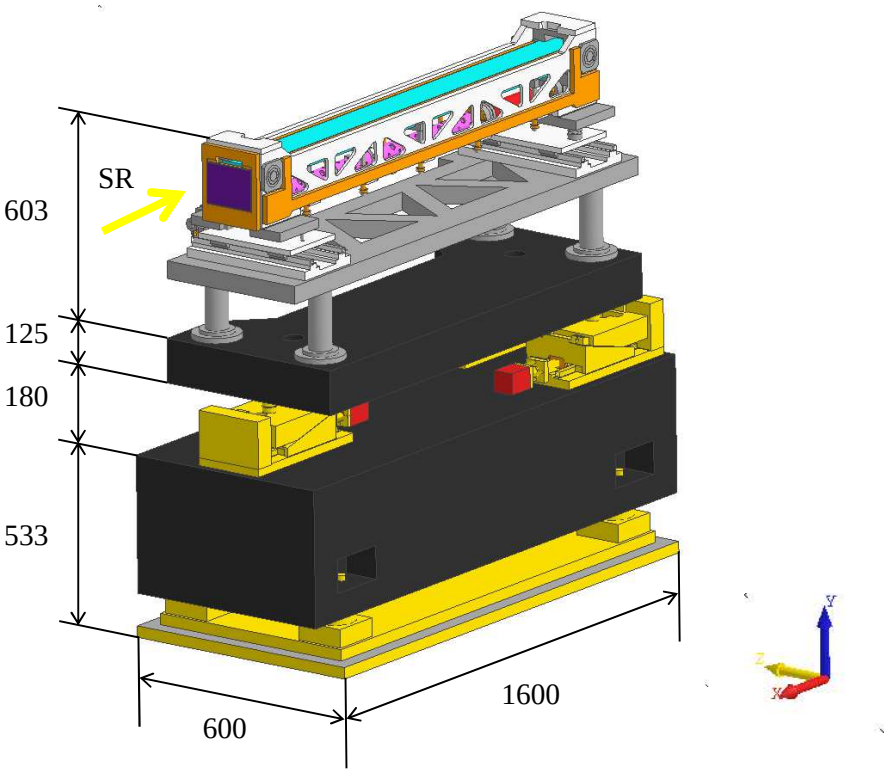

Fig. 2.1 Bird's eye view of CM

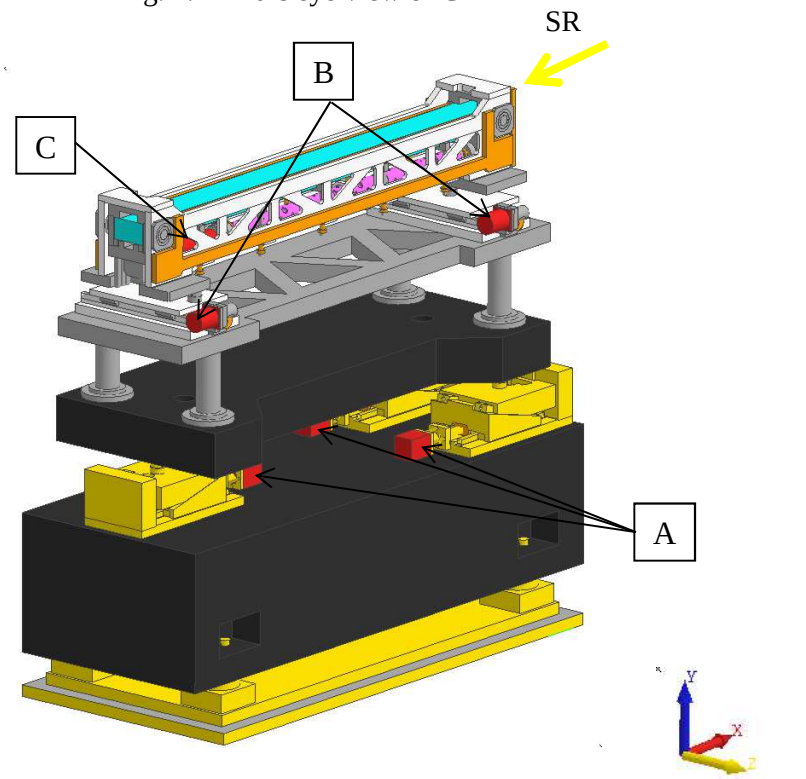

Fig. 2.2 Bird's eye view of CM (Opposite side)

3. Physical properties of materials

Material	Density [kg/m^3]	Young's modulus [GPa]	Poisson's ratio	Color
Granite ※1	3000	128	0.13	Black
SUS304	7930	193	0.31	Grey
Silicon	2330	165	0.26	Blue
Steel	7900	206	0.30	Yellow
Heavy alloy (HAC2)	17900	300	0.28	Purple
Super Invar	8150	136	0.35	Pink
Copper	8830	110	0.33	Orange
Motor	※2	193	0.31	Red
Aluminum	2690	71	0.33	White

Table 3.1 Physical Properties of materials

※1 Granite

The physical properties of granite is cited from the data sheet of sekigahara seisakujo.

※2 Motor

Table 3.2 show the each motor weight. The density of each motor in Fig 2.2 is adjusted to match these values.

Motor	A	B	C
Mass [kg]	0.45	1.0	2.0

Table 3.2 The weight of the motors

4. Analysis Conditions

Fig. 4.1 and Fig. 4.2 show the support boundary condition and mesh model used for analysis.

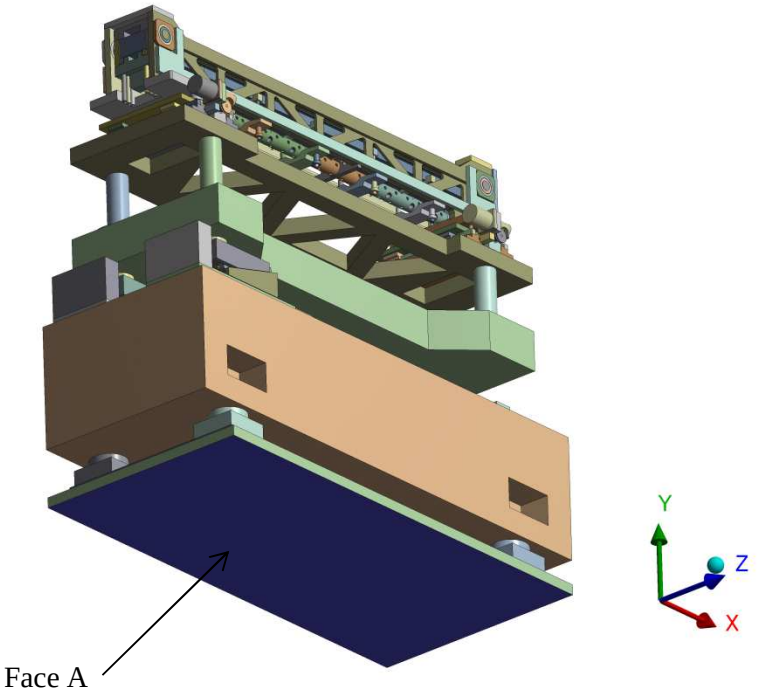

Face A (Fixed Support : X, Y, Z Fixed)

Fig. 4.1 Support boundary condition

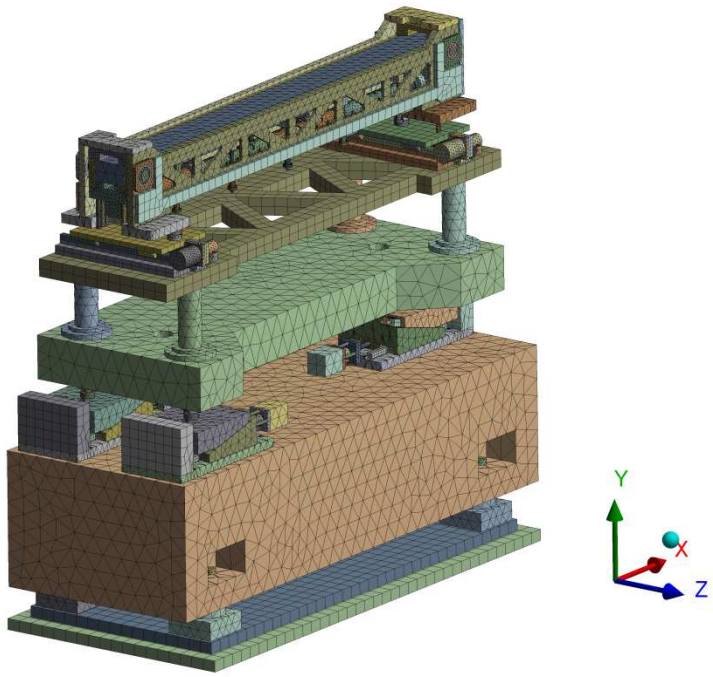

Fig. 4.2 Mesh model

5.1 Analysis Results Summary

Axis	Mode	Frequency [Hz]	Participation Factor	Participation Factor Ratio	Effective Mass	Cumulative Mass Fraction
X	1	67.1	-0.008	0.013	0.0000684	0.0002
	2	98.4	0.648	**1.000**	0.4199160	0.9903
	3	113.8	-0.033	0.051	0.0010837	0.9929
	4	116.1	-0.042	0.064	0.0017299	0.9969
	5	140.0	0.018	0.027	0.0003175	0.9977
	6	142.3	0.031	0.048	0.0009791	**1.0000**
Y	1	67.1	0.033	0.112	0.0010849	0.0096
	2	98.4	-0.022	0.075	0.0004917	0.0140
	3	113.8	-0.008	0.027	0.0000637	0.0145
	4	116.1	0.126	0.429	0.0159655	0.1558
	5	140.0	-0.092	0.312	0.0084433	0.2305
	6	142.3	0.295	**1.000**	0.0869522	**1.0000**
Z	1	67.1	0.616	**1.000**	0.3798290	0.8499
	2	98.4	0.020	0.033	0.0004173	0.8508
	3	113.8	0.049	0.079	0.0023701	0.8561
	4	116.1	-0.001	0.001	0.0000004	0.8561
	5	140.0	-0.238	0.386	0.0566629	0.9829
	6	142.3	-0.087	0.142	0.0076383	**1.0000**
ROT-X	1	67.1	**710.010**	**1.000**	**504120.0000000**	0.8848
	2	98.4	21.656	0.031	468.9640000	0.8857
	3	113.8	**64.709**	0.091	4187.2700000	0.8930
	4	116.1	0.435	0.001	0.1891180	0.8930
	5	140.0	**-234.660**	0.330	**55064.1000000**	0.9896
	6	142.3	-76.798	0.108	5897.9800000	**1.0000**
ROT-Y	1	67.1	-104.860	0.425	10994.8000000	0.0954
	2	98.4	6.299	0.026	39.6828000	0.0958
	3	113.8	**197.830**	0.802	**39135.1000000**	0.4354
	4	116.1	13.574	0.055	184.2620000	0.4370
	5	140.0	**-246.710**	**1.000**	**60864.2000000**	0.9652
	6	142.3	-63.360	0.257	4014.4900000	**1.0000**
ROT-Z	1	67.1	9.050	0.012	81.9088000	0.0001
	2	98.4	**-751.560**	**1.000**	**564849.0000000**	0.9958
	3	113.8	36.184	0.048	1309.3200000	0.9981
	4	116.1	19.232	0.026	369.8610000	0.9987
	5	140.0	-14.816	0.020	219.5090000	0.9991
	6	142.3	-22.316	0.030	498.0250000	**1.0000**

Table 5.1 Results Summary

5.2. Analysis Results

5.2.1 Mode_1 : Eigenvalue = 67.1 Hz

Fig. 5.2.1 shows the total deformation of mode 1. The analysis results value written in Fig. 5.2.1 indicate a relative value, so it has no physical meaning. Table 5.2.1 shows the detail of the vibration analysis results. Participation Factor and Effective Mass for each axis are shown in Table 5.2.1.

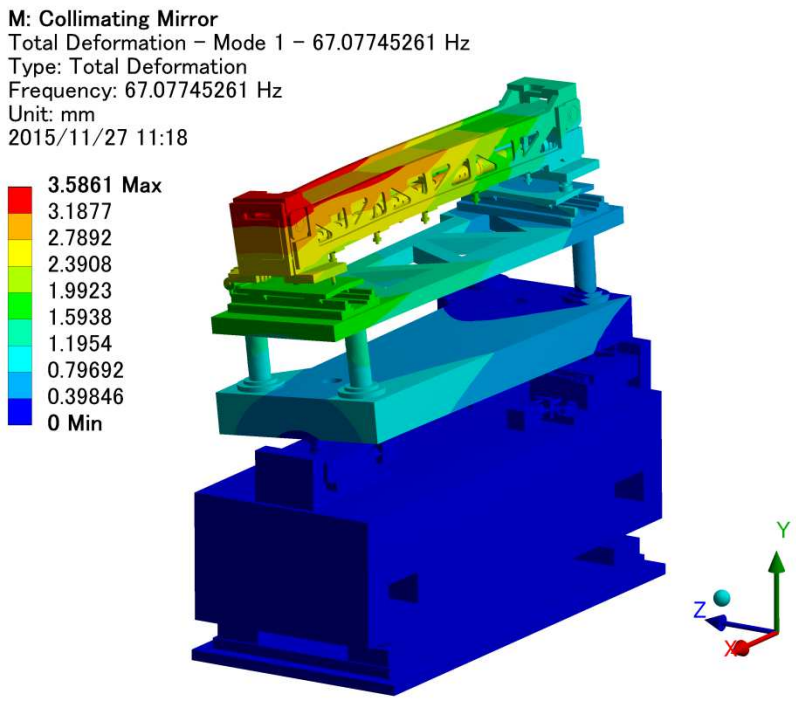

Fig. 5.2.1 Total deformation of mode 1

Axis	Participation Factor	Participation Factor Ratio	Effective Mass
X	-0.008	0.013	0.0000684
Y	0.033	0.112	0.0010849
Z	0.616	**1.000**	0.3798290
ROT-X	**710.010**	**1.000**	**504120.0000000**
ROT-Y	-104.860	0.425	10994.8000000
ROT-Z	9.050	0.012	81.9088000

Table 5.2.1 Detail of the mode 1

5.2.2 Mode_2 : Eigenvalue = 98.4 Hz

Fig. 5.2.2 shows the total deformation of mode 2. The analysis results value written in Fig. 5.2.2 indicate a relative value, so it has no physical meaning. Table 5.2.2 shows the detail of the vibration analysis results. Participation Factor and Effective Mass for each axis are shown in Table 5.2.2.

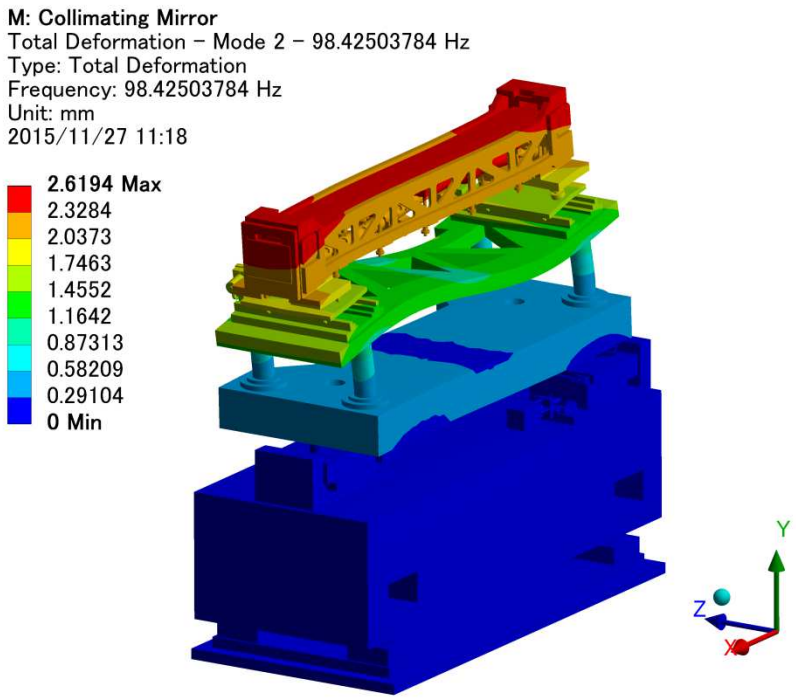

Fig. 5.2.2 Total deformation of mode 2

Axis	Participation Factor	Participation Factor Ratio	Effective Mass
X	0.648	**1.000**	0.4199160
Y	-0.022	0.075	0.0004917
Z	0.020	0.033	0.0004173
ROT-X	21.656	0.031	468.9640000
ROT-Y	6.299	0.026	39.6828000
ROT-Z	**-751.560**	**1.000**	**564849.0000000**

Table 5.2.2 Detail of the mode 2

5.2.3 Mode_3 : Eigenvalue = 113.8 Hz

Fig. 5.2.3 shows the total deformation of mode 3. The analysis results value written in Fig. 5.2.3 indicate a relative value, so it has no physical meaning. Table 5.2.3 shows the detail of the vibration analysis results. Participation Factor and Effective Mass for each axis are shown in Table 5.2.3.

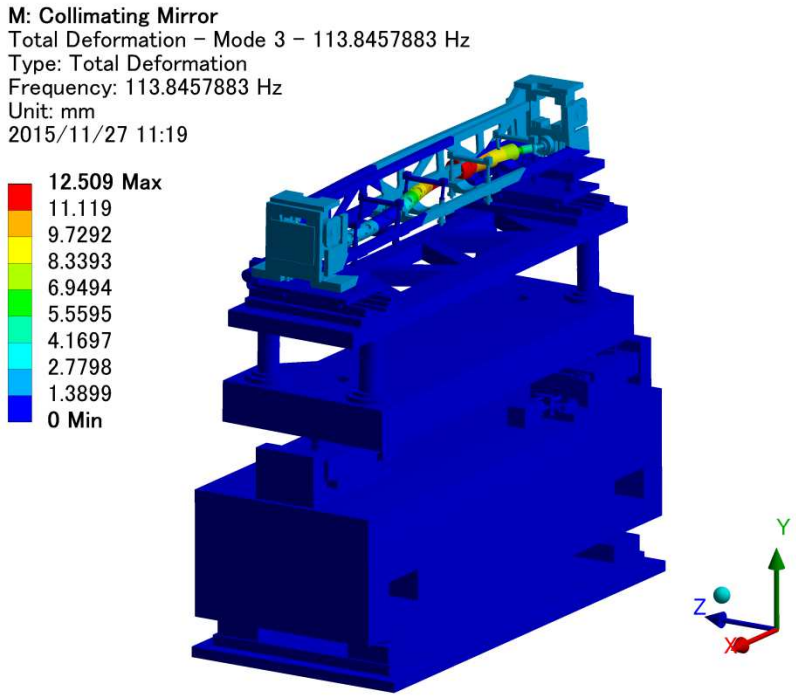

Fig. 5.2.3 Total deformation of mode 3

Axis	Participation Factor	Participation Factor Ratio	Effective Mass
X	-0.033	0.051	0.0010837
Y	-0.008	0.027	0.0000637
Z	0.049	0.079	0.0023701
ROT-X	**64.709**	0.091	4187.2700000
ROT-Y	**197.830**	0.802	**39135.1000000**
ROT-Z	36.184	0.048	1309.3200000

Table 5.2.3 Detail of the mode 3

5.2.4 Mode_4 : Eigenvalue = 116.1 Hz

Fig. 5.2.4 shows the total deformation of mode 4. The analysis results value written in Fig. 5.2.4 indicate a relative value, so it has no physical meaning. Table 5.2.4 shows the detail of the vibration analysis results. Participation Factor and Effective Mass for each axis are shown in Table 5.2.4.

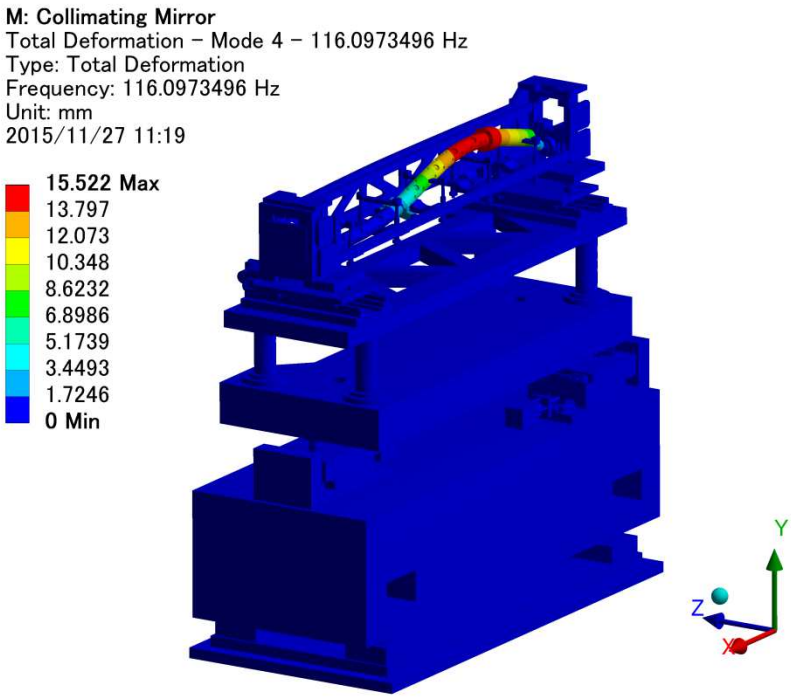

Fig. 5.2.4 Total deformation of mode 4

Axis	Participation Factor	Participation Factor Ratio	Effective Mass
X	-0.042	0.064	0.0017299
Y	0.126	0.429	0.0159655
Z	-0.001	0.001	0.0000004
ROT-X	0.435	0.001	0.1891180
ROT-Y	13.574	0.055	184.2620000
ROT-Z	19.232	0.026	369.8610000

Table 5.2.4 Detail of the mode 4

5.2.5 Mode_5 : Eigenvalue = 140.0 Hz

Fig. 5.2.5 shows the total deformation of mode 5. The analysis results value written in Fig. 5.2.5 indicate a relative value, so it has no physical meaning. Table 5.2.5 shows the detail of the vibration analysis results. Participation Factor and Effective Mass for each axis are shown in Table 5.2.5.

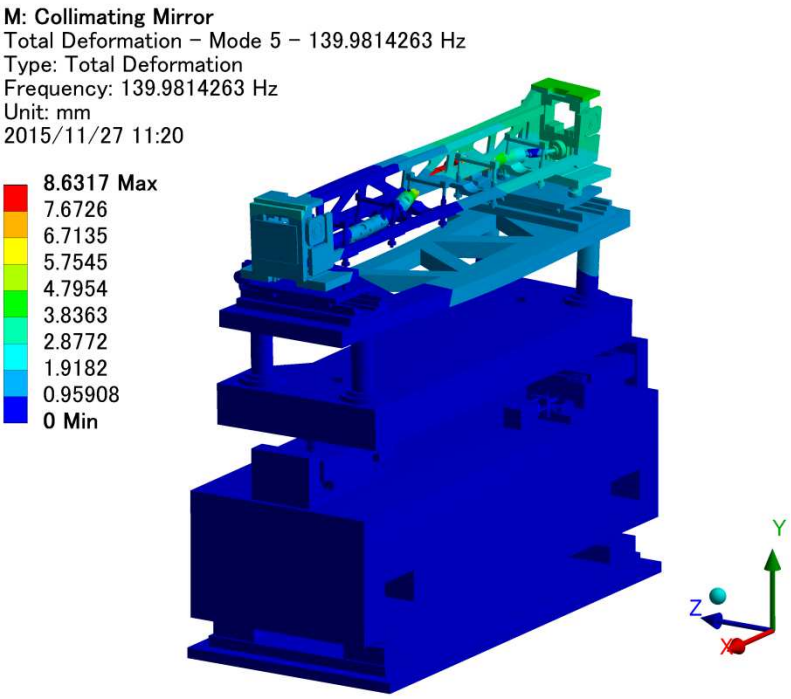

Fig. 5.2.5 Total deformation of mode 5

Axis	Participation Factor	Participation Factor Ratio	Effective Mass
X	0.018	0.027	0.0003175
Y	-0.092	0.312	0.0084433
Z	-0.238	0.386	0.0566629
ROT-X	**-234.660**	0.330	**55064.1000000**
ROT-Y	**-246.710**	**1.000**	**60864.2000000**
ROT-Z	-14.816	0.020	219.5090000

Table 5.2.5 Detail of the mode 5

5.2.6 Mode_6 : Eigenvalue = 142.3 Hz

Fig. 5.2.6 shows the total deformation of mode 6. The analysis results value written in Fig. 5.2.6 indicate a relative value, so it has no physical meaning. Table 5.2.6 shows the detail of the vibration analysis results. Participation Factor and Effective Mass for each axis are shown in Table 5.2.6.

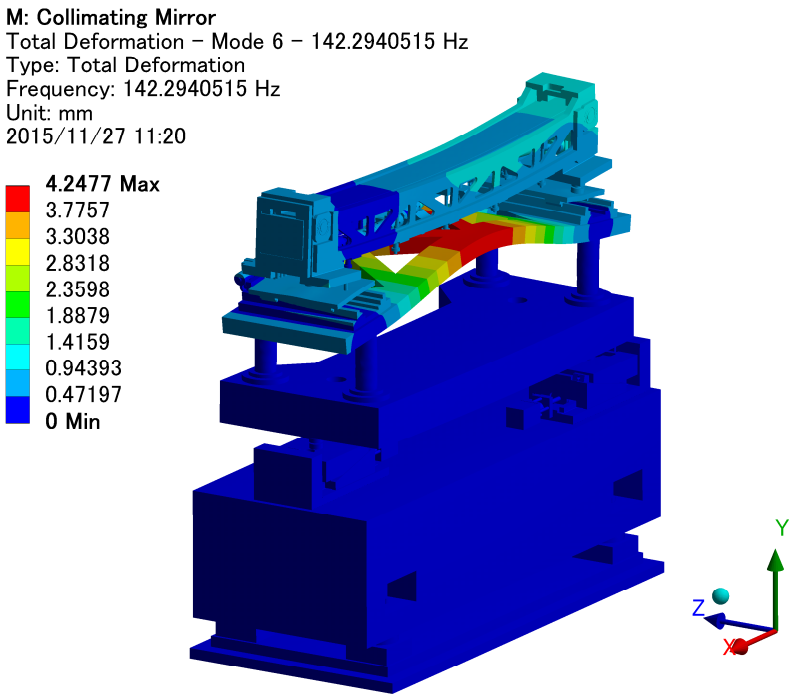

Fig. 5.2.6 Total deformation of mode 6

Axis	Participation Factor	Participation Factor Ratio	Effective Mass
X	0.031	0.048	0.0009791
Y	0.295	**1.000**	0.0869522
Z	-0.087	0.142	0.0076383
ROT-X	-76.798	0.108	5897.9800000
ROT-Y	-63.360	0.257	4014.4900000
ROT-Z	-22.316	0.030	498.0250000

Table 5.2.6 Detail of the mode 6

NSLS 2 FXI WPFS

Thermo-Structural analysis for current scenario

TOYAMA Co., Ltd
Date : Dec. 3, 2015
Created by : Tsubota

➢ CVD diamond 0.3 mm

1. Scope

We have performed thermo-structural analysis of the White and Pink beam Fluorescent Screen(WPFS) of NSLS 2 FXI beamline to evaluate the temperature, deformation, stress and strain profiles. In this report, we have assumed the situation that the white beam of current scenario irradiates the WPFS. The calculation was done by using ANSYS 16.0 Mechanical.

The analysis conditions are listed in Table 1.1. These values are cited from the Technical Specification(NX-C-SPC-FXI-PDS-001). The more detail of the analysis conditions are written in Page 3.

Table 1.2 shows the analysis results.

	Analysis conditions	
Total Absorbed Power in CVD diamond	**444**	W
Total Absorbed Power in Graphite filter	**235**	W
Distance from the source	**31.9**	m
Incident Beam	**H × V = 0.21** mrad × **0.21** mrad	

Table 1.1 Analysis conditions

	Results	
Maximum Temperature	**498**	℃
Cooling pipe Temperature	**125**	℃
Von Mises Stress (CVD diamond)	**582**	MPa
Equivalent Elastic Strain (CVD diamond)	**0.0055**	%
Substrate material	**CVD diamond (25 × 55 × 0.5)**	

* Tensile strength 1100 MPa : CVD-diamond catalogue data by Diamond Materials

Table 1.2 Results Summary

2. Dimensional drawing

Please see the dimensional drawing of the WPFS. The analysis was done by using these simplified model

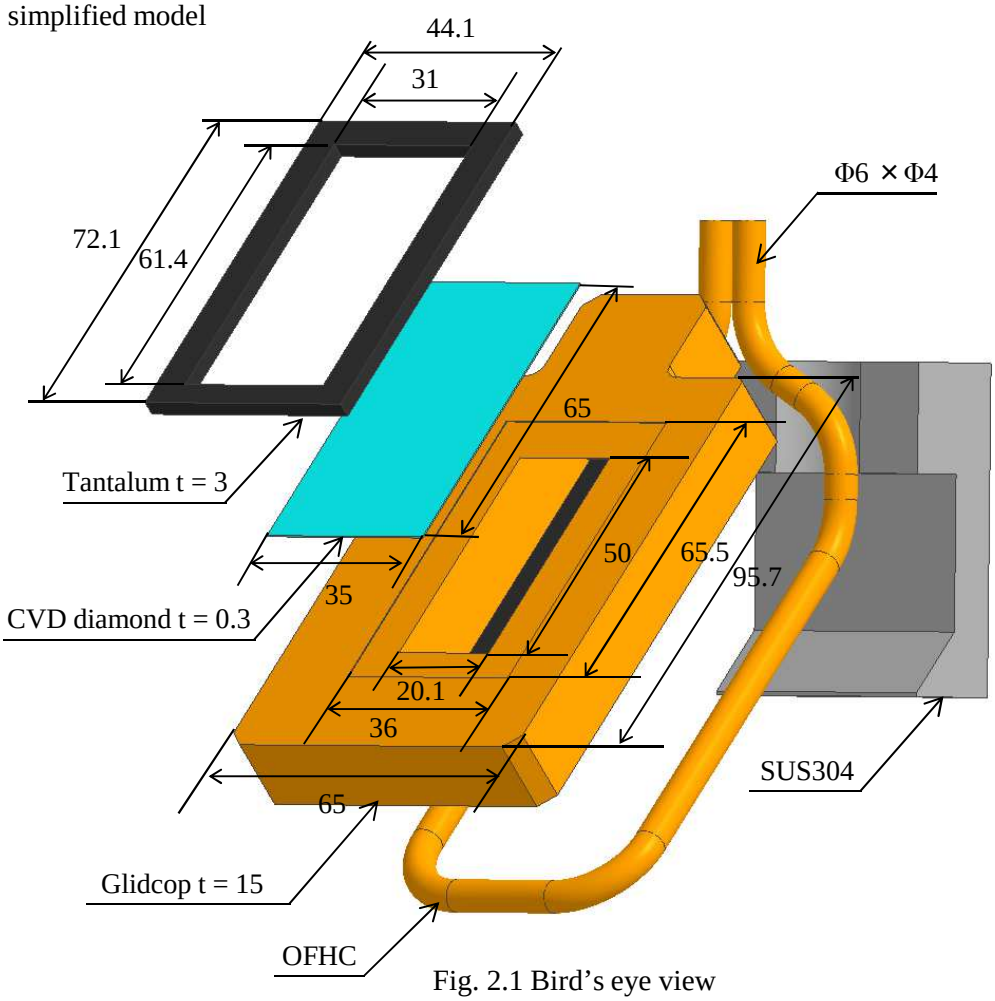

Fig. 2.1 Bird's eye view

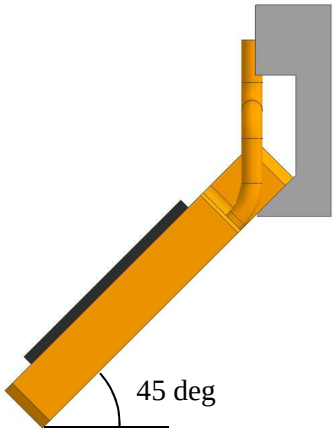

Fig. 2.2 Side view of WPFS

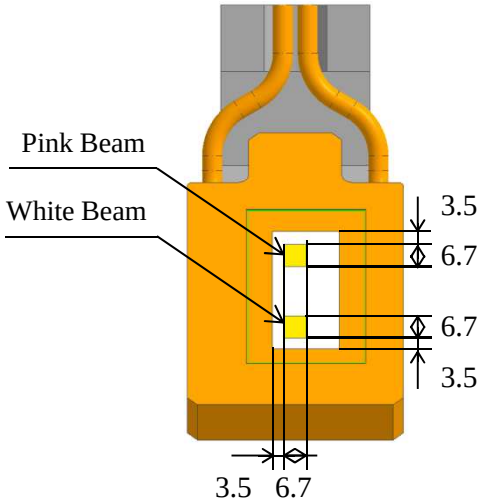

Fig. 2.3 Front view of WPFS

3. Boundary conditions

3.1 For thermal analysis

The green area in Fig. 3.1.1 shows the heat input position. We assumed all the white beam irradiate the WPFS. The yellow surface in Fig. 3.1.2 shows the convection surface. Table 3.1 show the boundary conditions for thermal analysis. We assumed that the thermal contact conductance is enhanced by inserting Ag sheet between Glidcop and CVD diamond.

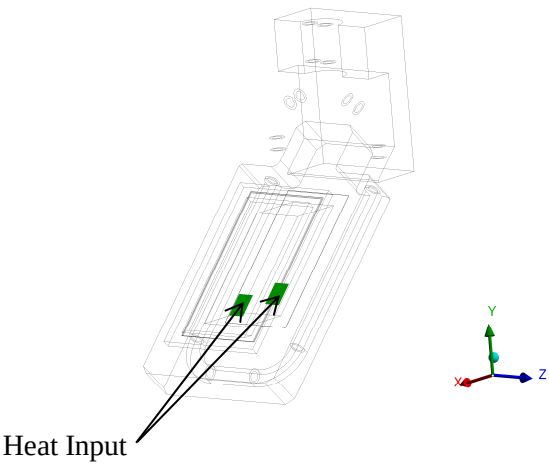

Fig. 3.1.1 Heat input area

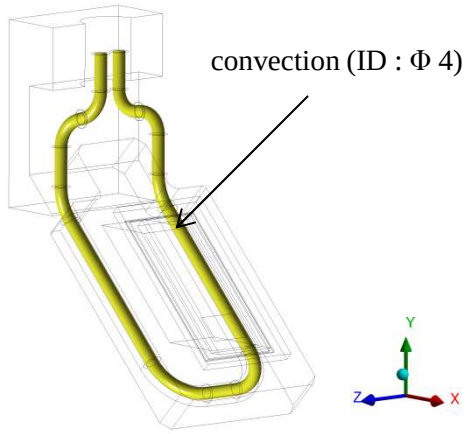

Fig. 3.1.2 convection surface

	Analysis Conditions	
Cooling Water temperature	**29.5**	℃
Absorbed power (CVD diamond)	**792**	W
Maximum heat flux	**13.3**	W/mm^2
Inclined angle	**45**	degrees
Distance from the source	**31.9**	m
Incident Beam	**H × V = 0.21 mrad × 0.21 mrad**	
Convection coefficient	**10000**	W/m^2・K
Flow rate	**1.5**	L/min
Flow velocity	**2.0**	m/s
Pipe inner diameter	**4**	mm
Pressure Loss	**0.051**	MPa
Thermal contact conductance between Glidcop and CVD diamond	**10000**	W/m^2・K

Table 3.1 Analysis Conditions

3. Boundary conditions

3.2 For Static structural analysis

Fig. 3.2 shows the support boundary conditions. The static analysis was done by using CVD diamond only. All boundary conditions for static structural analysis is shown in Table 3.2.

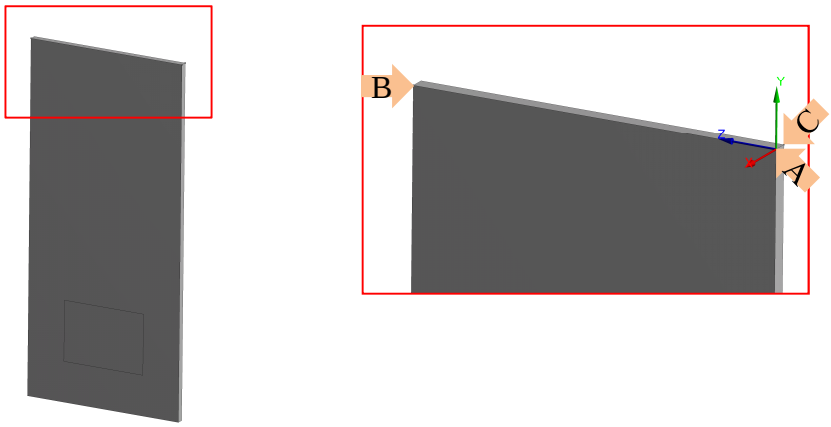

Fig. 3.2 Support Points

	Analysis Conditions	
Point A	**Fixed : X, Y, Z Axis**	
Point B	**Fixed : X, Y Axis**	**Free : Z Axis**
Point C	**Fixed : Y Axis**	**Free : X, Z Axis**
Reference temperature	**57.2**	℃

* The reference temperature was defined from the minimum temperature of CVD diamond.

Table.3.2 Support boundary conditions

3.3 Mesh model

Fig. 3.3 shows the mesh model used for analysis.

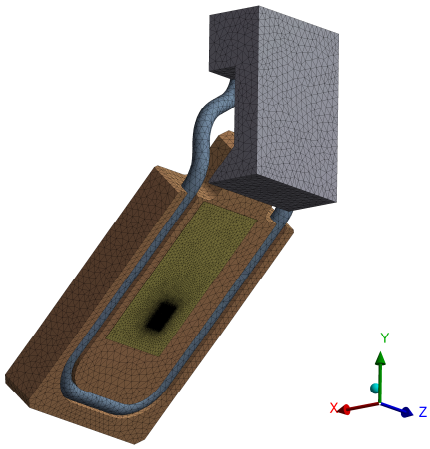

Fig. 3.3 Mesh model

3. Boundary conditions

3.4 Physical properties of materials

Table 3.4 shows the physical properties of materials used for analysis.

	Density [kg/m^3]	Young's modulus [Pa]	Poisson's ratio	Thermal Expansion [1/K]	Thermal Conductivity [W/m・K]	Tensile Strength [MPa]
OFHC	8940	1.18E+11	0.34	1.65E-05	389	-
CVD diamond	3515	1.05E+12	0.1	Fig. 3.4	Fig. 3.4	1100
Graphite sheet	850	1.08E+8	0.3	9.3E-07	700	-
Tantalum	16690	1.86E+11	0.34	6.3 E-06	57.5	-
SUS304	7930	1.93E+11	0.31	1.55E-05	15.3	-

Table 3.4 Physical properties of materials

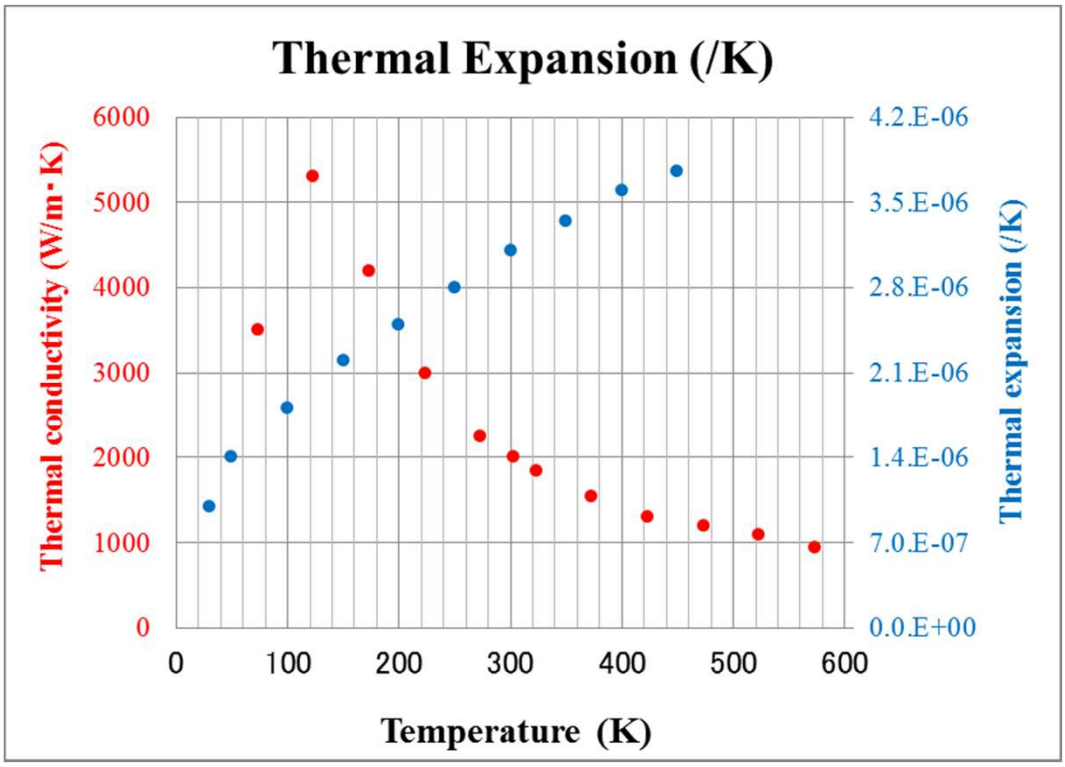

Fig 3.4 Thermal conductivity and thermal expansion of CVD diamond

3. Boundary conditions

3.5 Power map calculation

The power map calculation was done by using SPECTRA* software. The Fig. 3.5 shows the power map which applied for analysis. We assumed some of the synchrotron light is absorbed in WPFS. Table 3.5 shows the heat balance sheet.

* : T. Tanaka and H. Kitamura, J. Synchrotron Radiation 8 (2001) 1221.
Email : ztanaka@spring8.or.jp
URL : http://radiant.harima.riken.go.jp/spectra/index.html

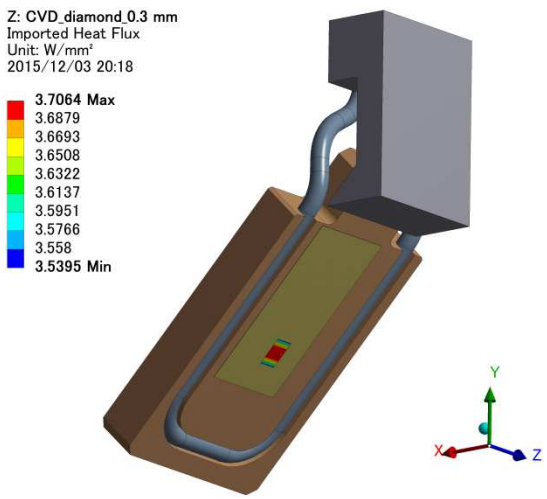

Fig. 3.5.1 Power profile for the graphite sheet

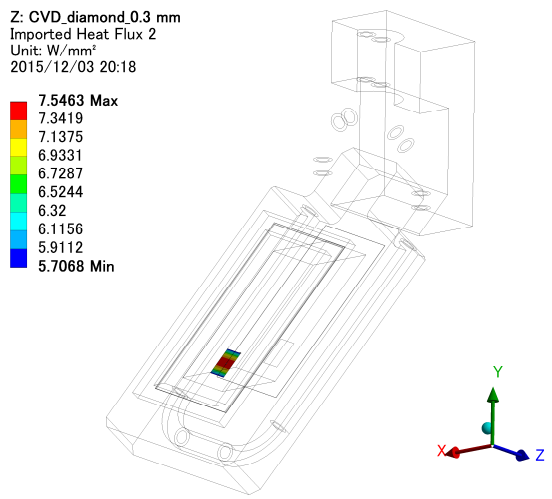

Fig. 3.5.2 Power profile for the CVD diamond

Total power calculation		
Total power	**1906**	W
Absorbed power in CVD diamond	**444**	W
Absorbed power in Graphite sheet	**235**	W

Table 3.5 Heat balance sheet

4. Calculation results

4.1 Temperature profile

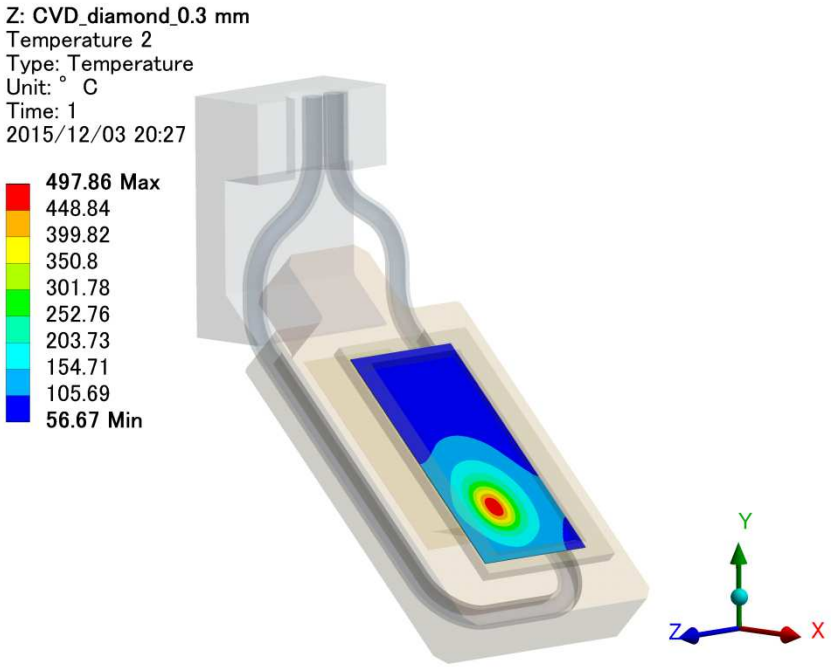

Fig. 4.1.1 Temperature profile of diamond

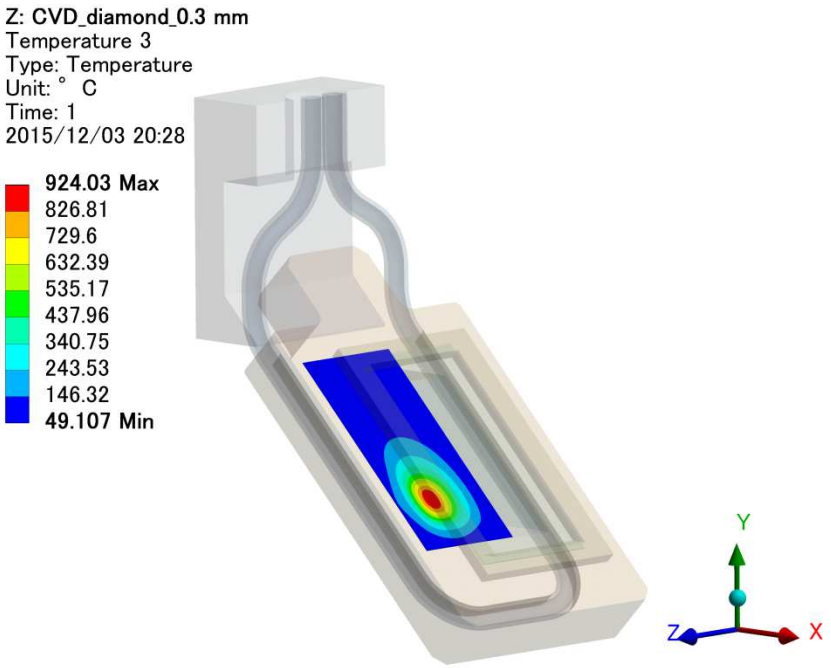

Fig. 4.1.2 Temperature profile of Graphite sheet

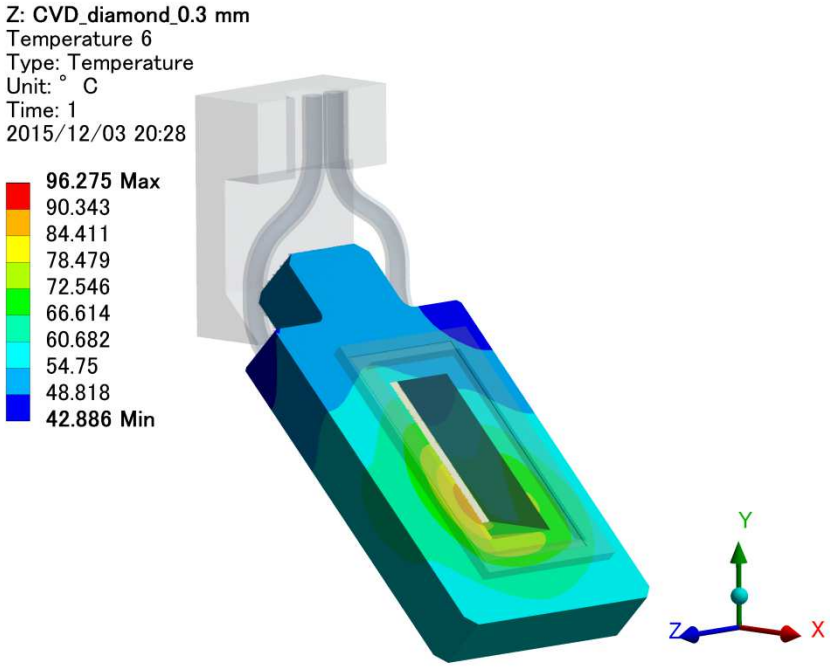

Fig. 4.1.3 Temperature profile of Glidcop

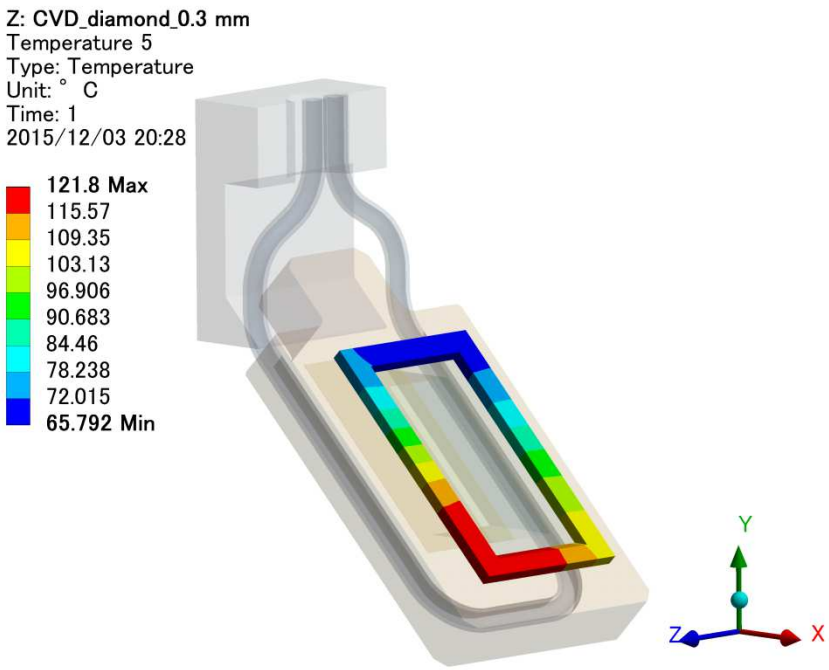

Fig. 4.1.4 Temperature profile of Tantalum

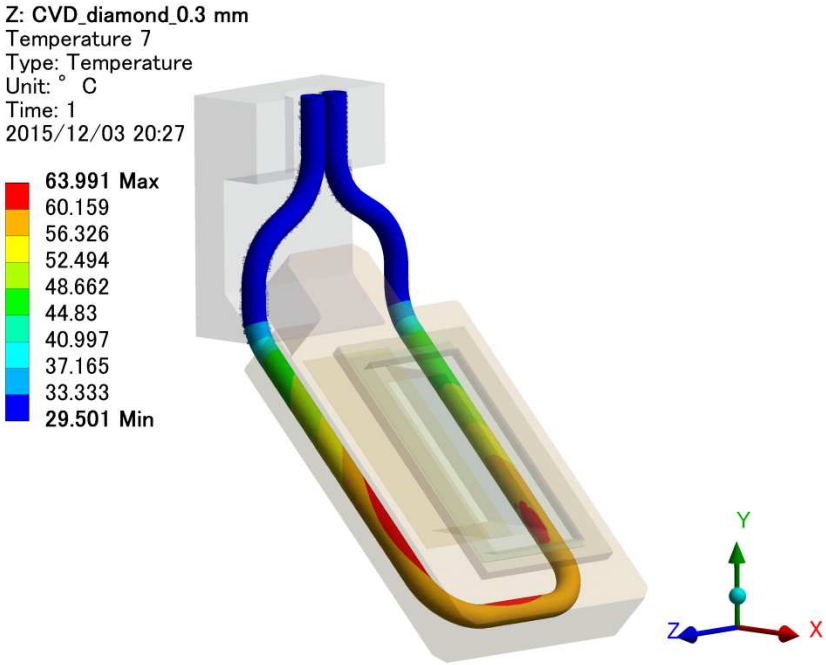

Fig. 4.1.5 Temperature profile of cooling pipe

4.2 Deformation profile

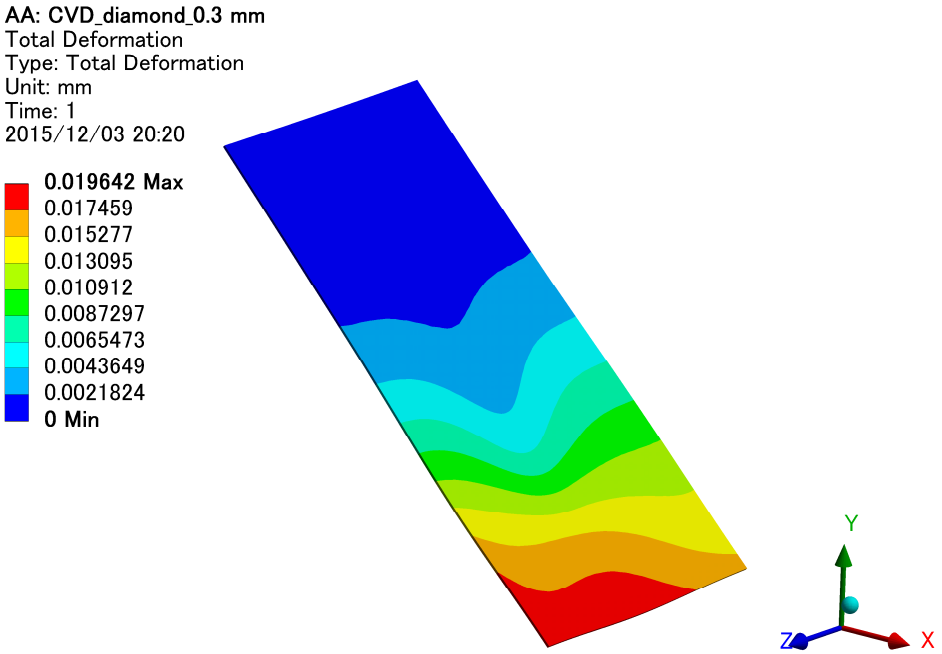

Fig. 4.2.1 Total Deformation

4.3 Stress profile

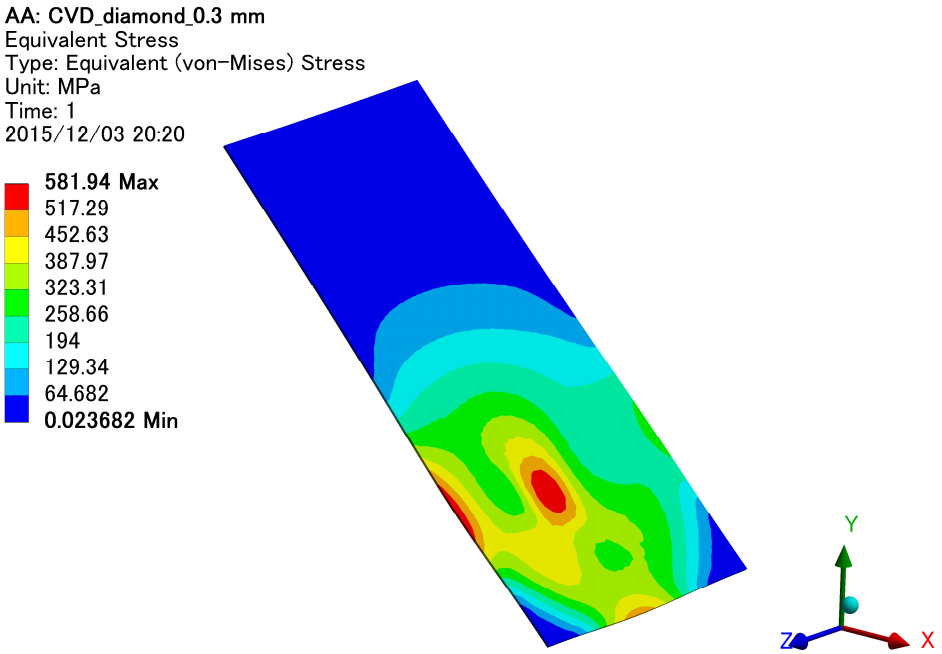

Fig. 4.3.1 Von Mises Stress of CVD diamond

4.4 Elastic strain profile

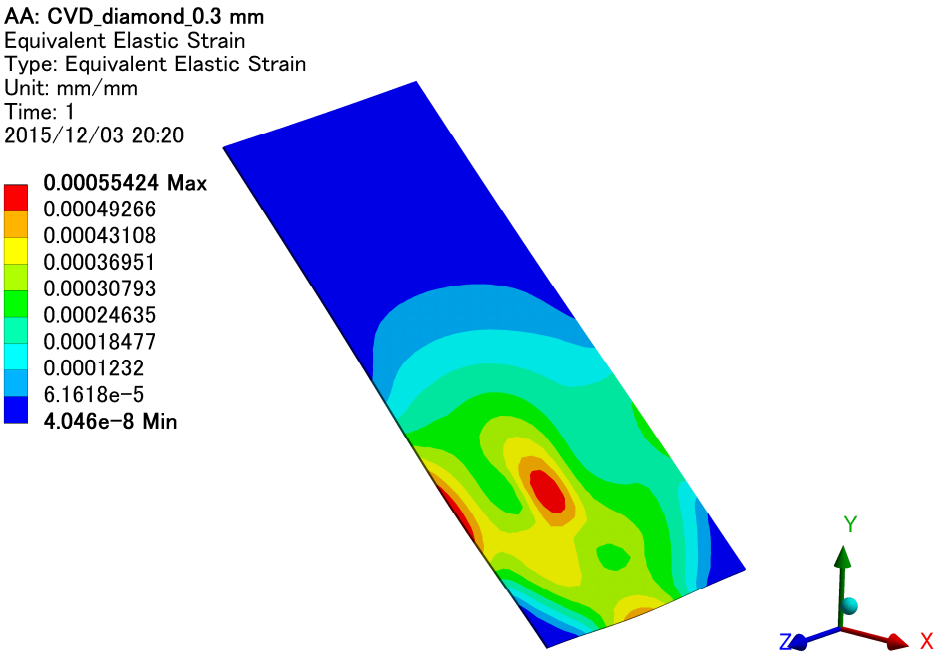

Fig. 4.4.1 Equivalent Elastic Strain of CVD diamond

NSLS 2 FXI WPFS

Pressure Vessel Structural analysis
- Vacuum and High inner pressure condition -

TOYAMA Co., Ltd

Date : Nov. 19, 2015

Created by : Hanashima

1. Scope

We have performed Pressure Vessel structural analysis of the White and Pink beam Fluorescent Screen(WPFS) chamber of NSLS 2 FXI beamline to evaluate the deformation, stress and strain profiles. In this report, we assumed the High inner pressure is 15 psig when the vessel subject to back fill pressurization. The calculation was done by using ANSYS 16.0 Professional.

The analysis conditions are listed in Table 1.1. These values are cited from the Vacuum Consensus Guidelines (BNL-81715-2008-IR_Vacuum_Consensus_Guidelines_for_DOE_Labs). The more detail of the analysis conditions are written in Page 3 to 4.

Table 1.2 shows the analysis results. All these analysis results cleared the design criteria (BNL-81715-2008-IR).

	Vessel Pressure [Pa]		Gravity [m/s^2]
	Internal	External	
Vacuum condition	**0**	**101300**	**9.8**
High inner pressure condition	**103421 (15 psig)**	**0**	

Table 1.1 Analysis conditions

		Results	
Vacuum condition	Maximum deformation	**0.005**	mm
	Maximum Von Mises Stress	**10**	MPa
	Maximum Equivalent Elastic Strain	**0.005**	%
High inner pressure condition	Maximum deformation	**0.005**	mm
	Maximum Von Mises Stress	**10**	MPa
	Maximum Equivalent Elastic Strain	**0.005**	%
Substrate material		**SUS304L**	

Table 1.2 Results Summary

2. Dimensional drawing

Please see the dimensional drawing of the WPFS chamber in Fig. 2.1 and Fig. 2.2. The analysis was done by using these simplified model

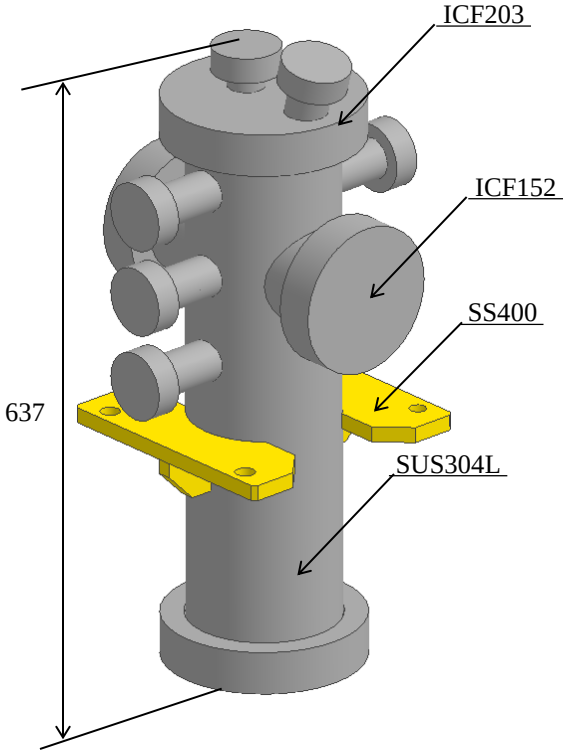

Fig. 2.1 Bird's eye view of chamber

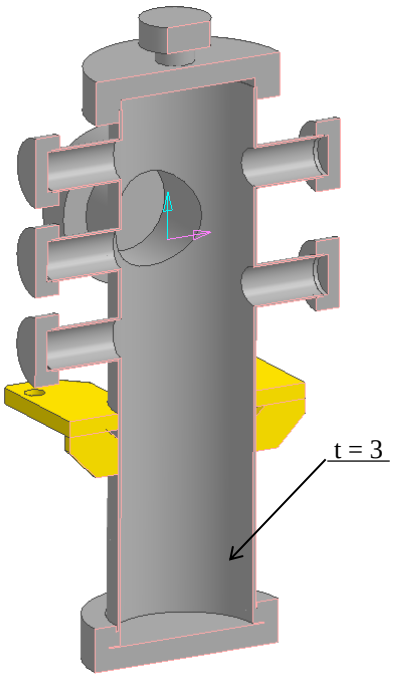

Fig. 2.2 Sectional view of chamber

3. Boundary conditions

3.1 For Static structural analysis

Fig. 3.1 shows the support points. All boundary conditions for static structural analysis is shown in Table 3.1.

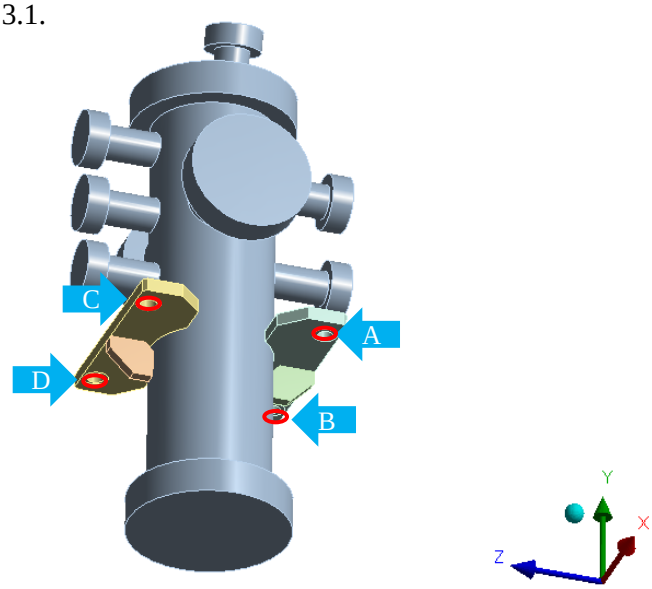

Fig. 3.2 Support Points

	Analysis Conditions
Surface A to D	**Fixed : X, Y, Z Axis**

Table 3.1 Support boundary conditions

3.2 Mesh model

Fig. 3.2 shows the mesh model used for analysis.

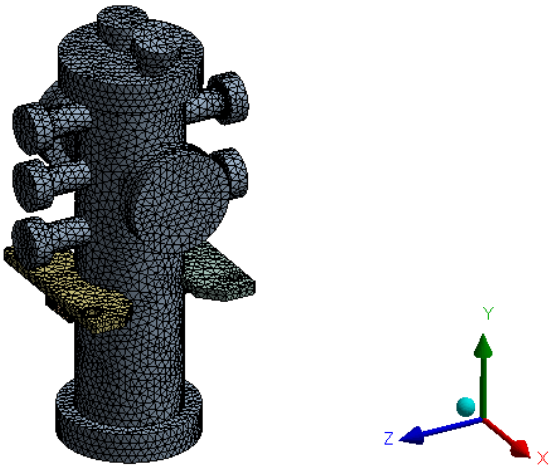

Fig. 3.2 Mesh model

3. Boundary conditions

3.3 Physical properties of materials

Table 3.3 shows the physical properties of materials used for analysis.

	Density	Young's modulus	Poisson's ratio
SUS304L	7930 kg/m³	1.93E+11 Pa	0.31
SS400	7900 kg/m³	2.06E+11 Pa	0.30

Table 3.4 Physical properties of materials

3.4 Pressure condition

The pressure conditions are as below.

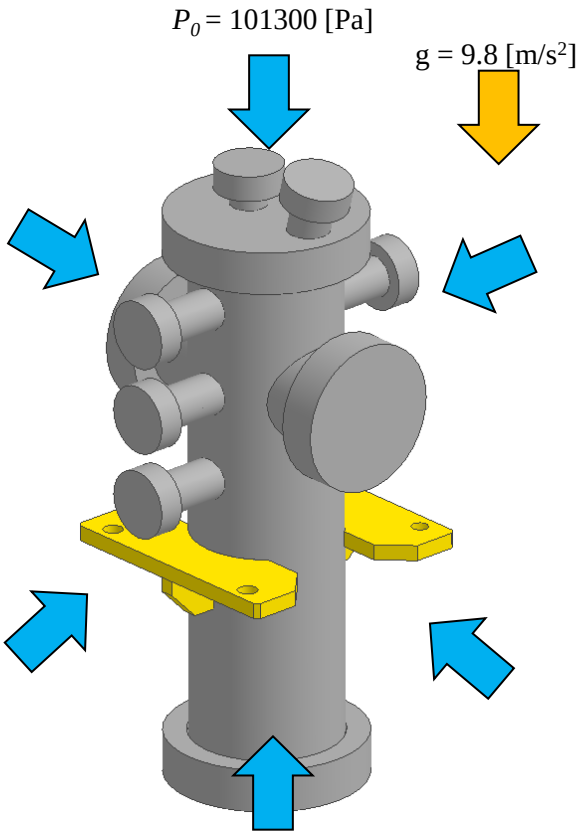

Fig. 3.5.1 Vacuum condition

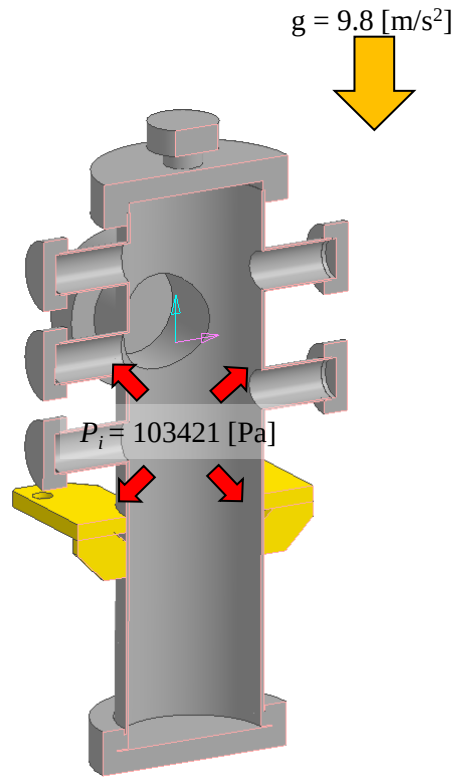

Fig. 3.5.2 High inner pressure condition

4. Calculation results

4.1 Deformation profile – Vacuum condition

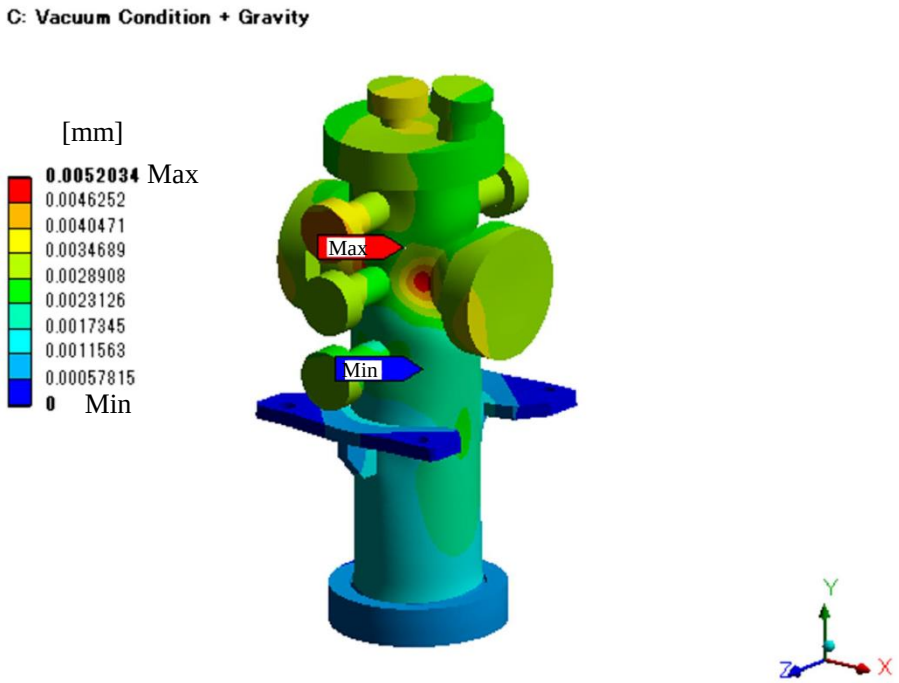

Fig. 4.1.1 Total deformation profile

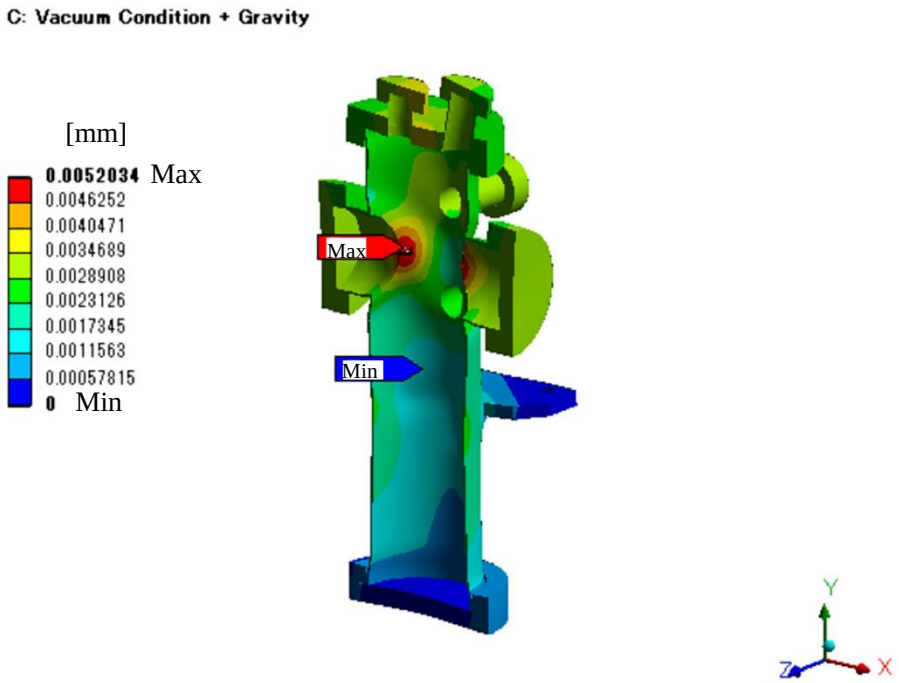

Fig. 4.1.2 Sectional view of total deformation profile

4.2 Stress profile – Vacuum condition

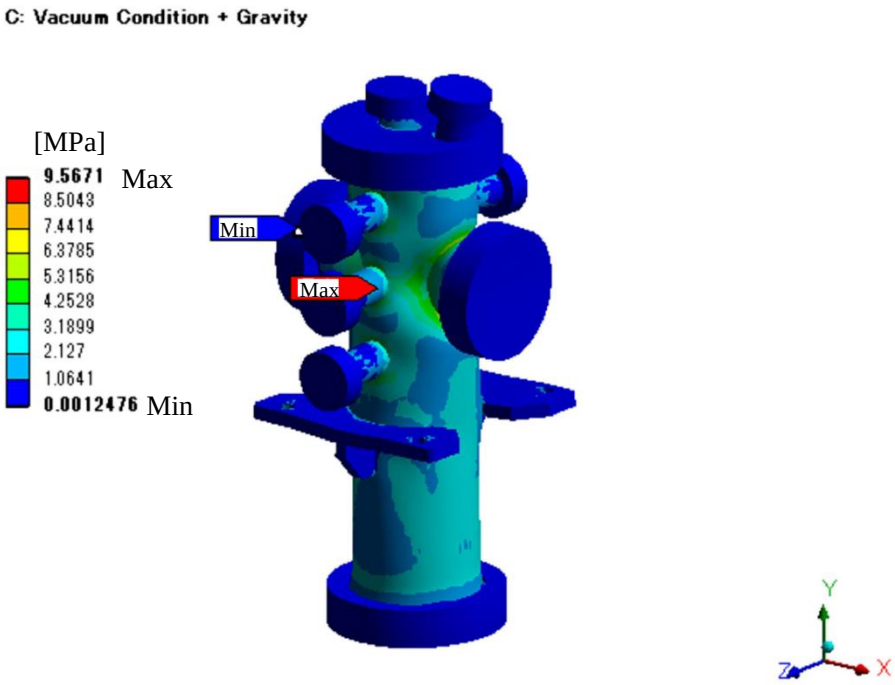

Fig. 4.2.1 Von Mises Stress profile

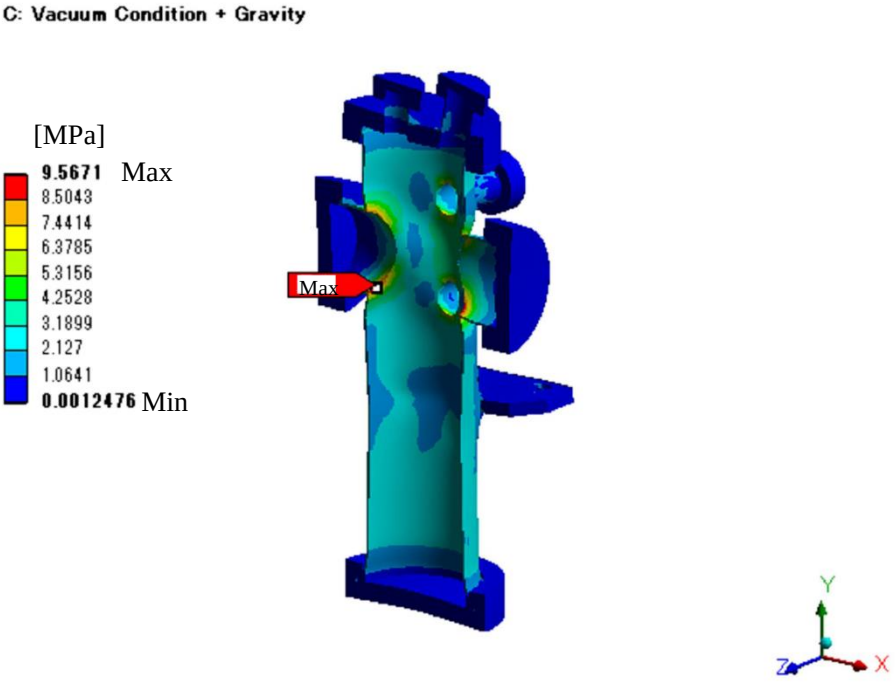

Fig. 4.2.2 Sectional view of Von Mises Stress profile

4.3 Elastic strain profile – Vacuum condition

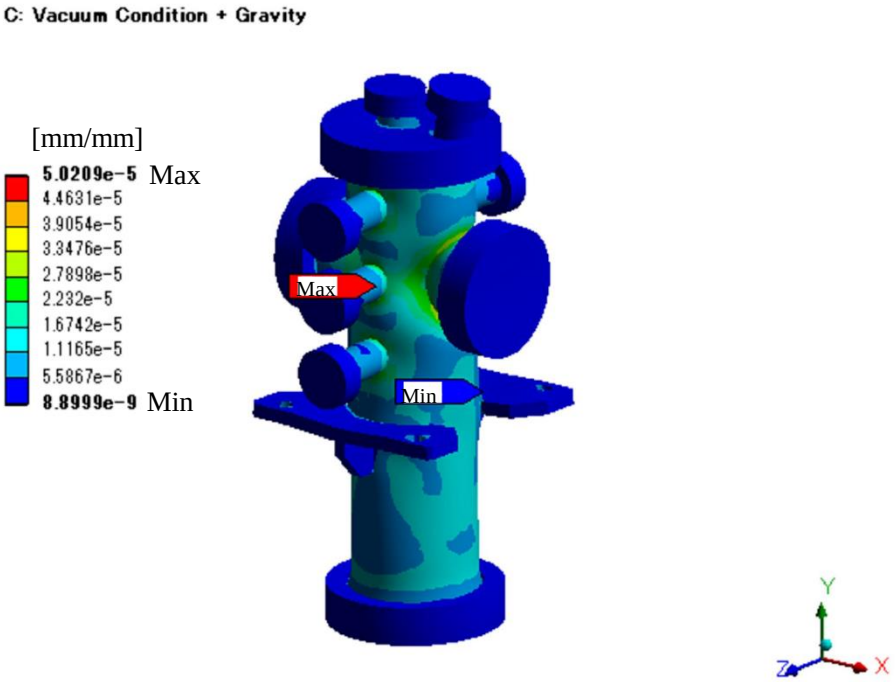

Fig. 4.3.1 Equivalent Elastic Strain profile

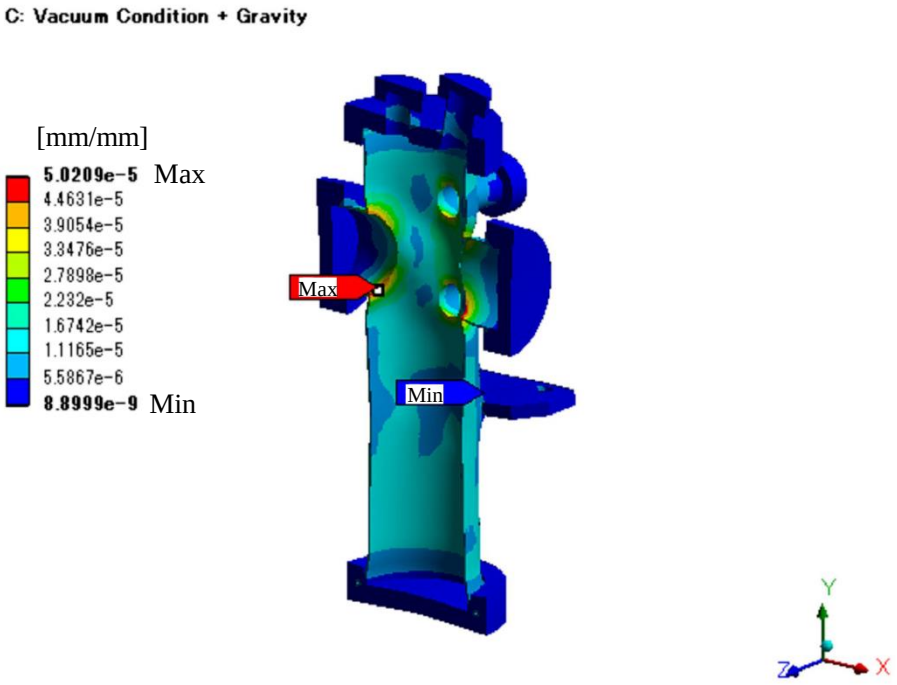

Fig. 4.3.2 Sectional view of Equivalent Elastic Strain profile

4. Calculation results

4.4 Deformation profile – High inner pressure condition

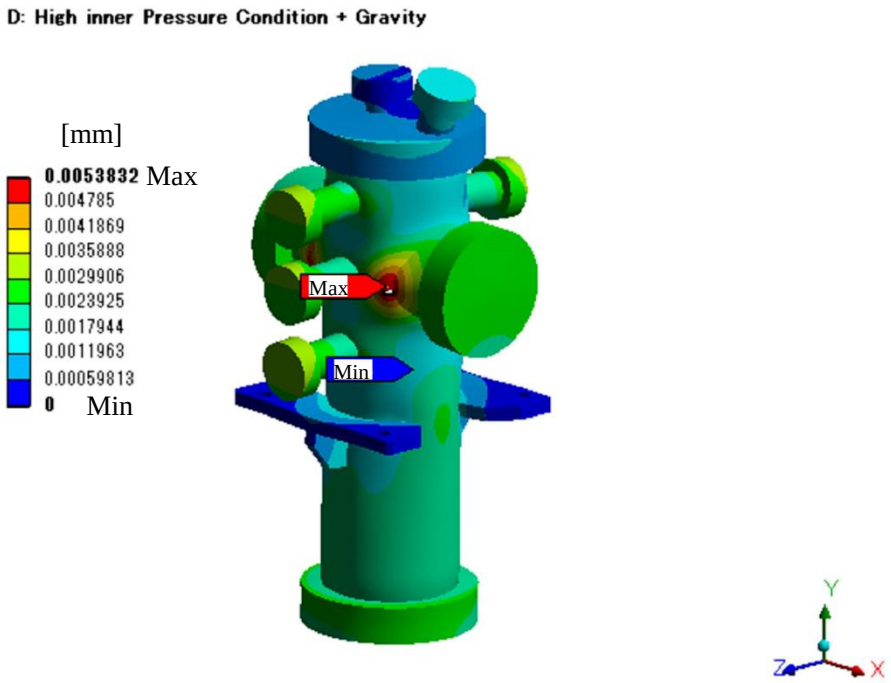

Fig. 4.4.1 Total deformation profile

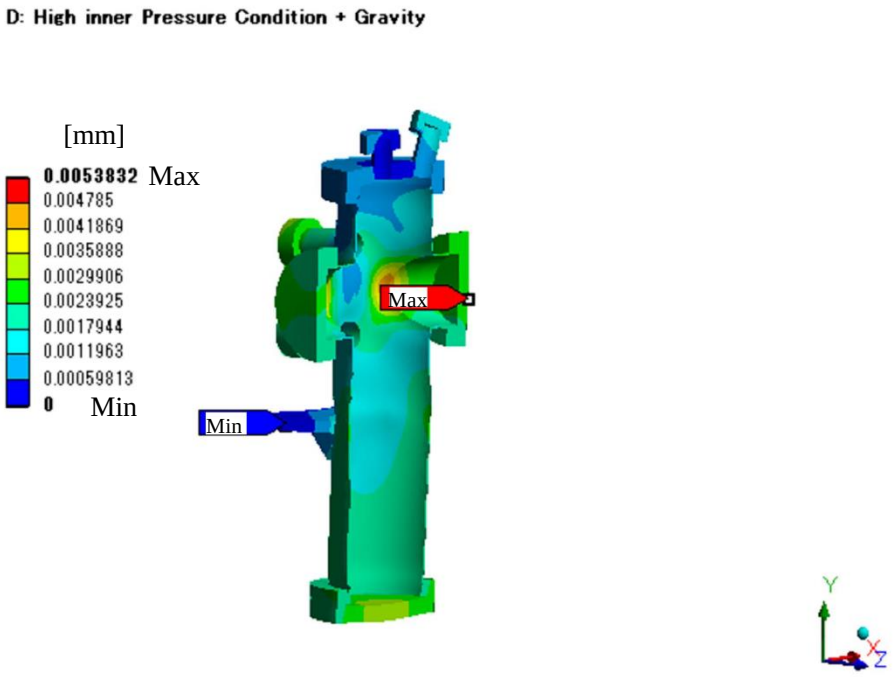

Fig. 4.4.2 Sectional view of total deformation profile

4.5 Stress profile – High inner pressure condition

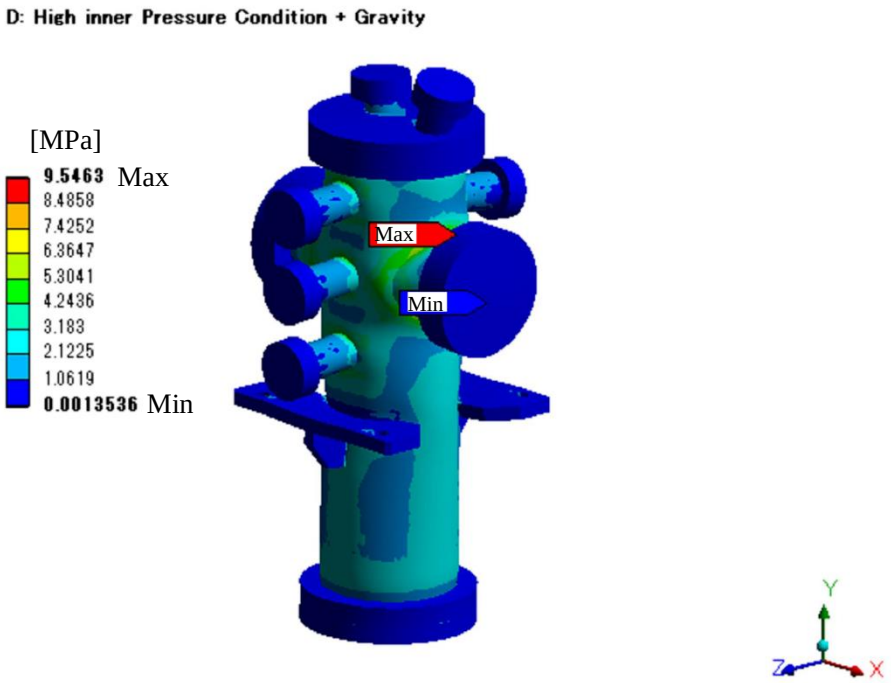

Fig. 4.5.1 Von Mises Stress profile

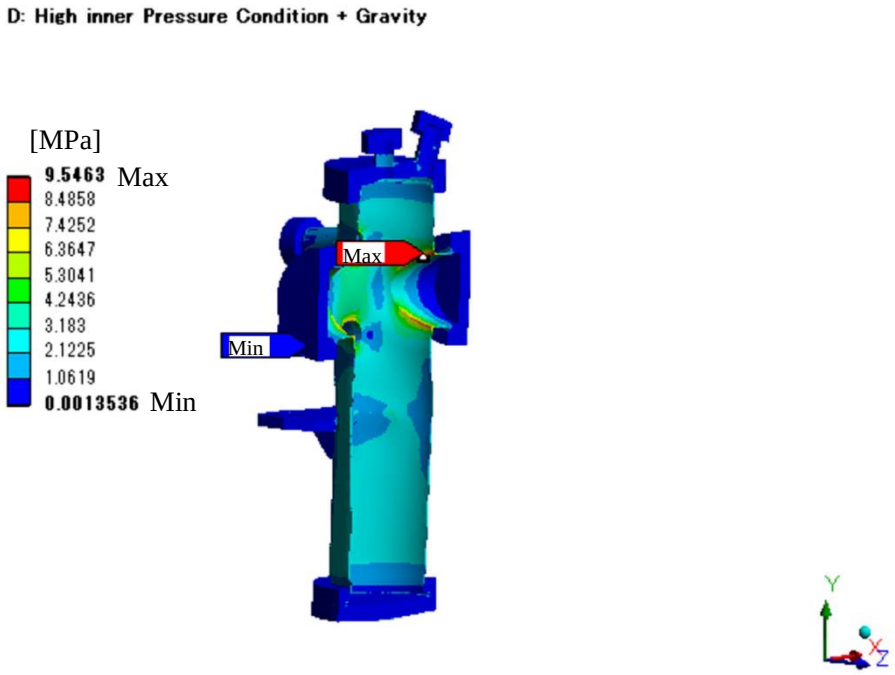

Fig. 4.5.2 Sectional view of Von Mises Stress profile

4.6 Elastic strain profile – High inner pressure

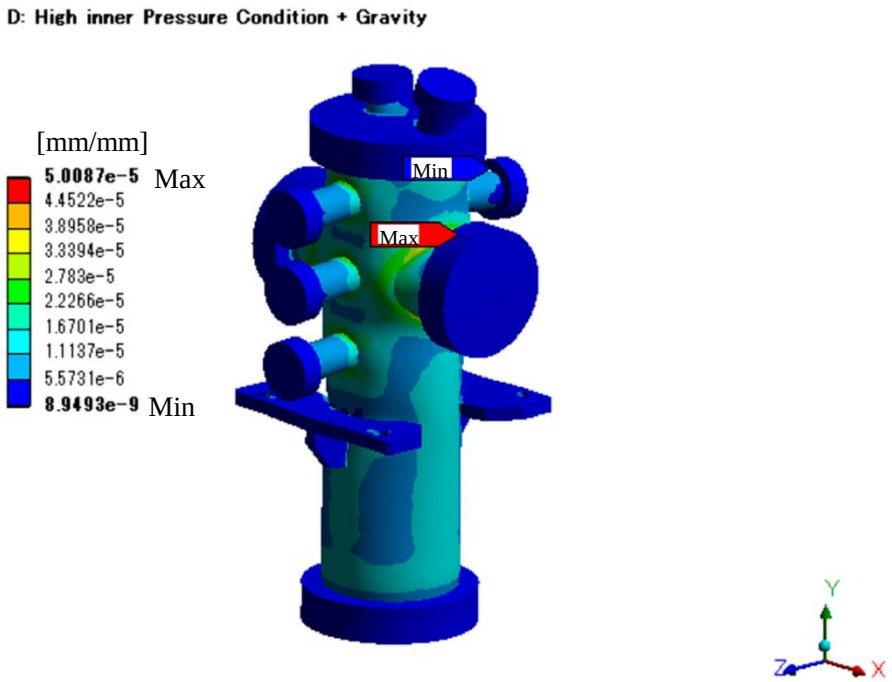

Fig. 4.6.1 Equivalent Elastic Strain profile

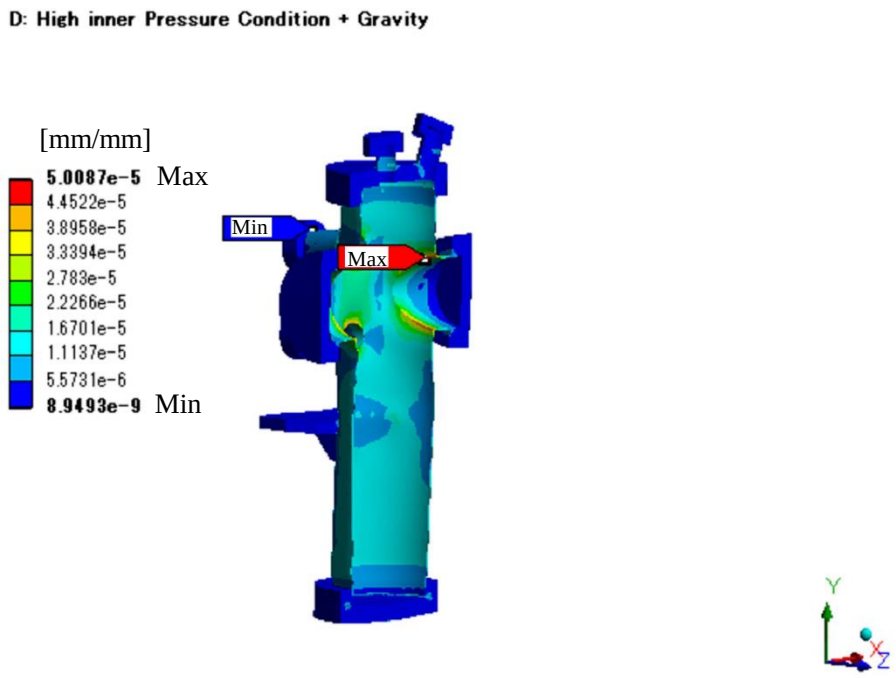

Fig. 4.6.2 Sectional view of Equivalent Elastic Strain profile

NSLS 2 FXI WBS and PBS

Thermo-Structural analysis

- Assuming the synchrotron light pass through the collimating mirror.

TOYAMA Co., Ltd

Date : Oct. 1, 2015

Created by : Tsubota

1. Scope

We have performed thermo-structural analysis of the white beam stop(WBS) and pink beam stop(PBS) of NSLS 2 FXI beamline to evaluate the temperature, deformation, stress and strain profiles. In this report, we assumed the situation that the synchrotron light passed through the collimating mirror and irradiate to the WBS and PBS. The calculation was done by using ANSYS 16.0 Mechanical.

The analysis conditions are listed in Table 1.1. These values are cited from the Technical Specification(NX-C-SPC-FXI-PDS-001). The more detail of the analysis conditions are written in Page 3.

Table 1.2 shows the analysis results. All these analysis results cleared the design criteria(LT-C-XFD-SPC-COM-001).

	Analysis conditions
Total Absorbed Power	**3719** W
Distance from the source	**32.4** m
Beam size	H × V = **13.28** mm × **6.804** mm

Table 1.1 Analysis conditions

	Results
Maximum Temperature	**191.4** ℃
Cooling pipe Temperature	**71.3** ℃
Surface Temperature	**55.4** ℃
Maximum Von Mises Stress	**254** MPa
Maximum Equivalent Elastic Strain	**0.23** %
Substrate material	**Glidcop**

Table 1.2 Results Summary

2. Dimensional drawing

Please see the dimensional drawing of the WBS and PBS in Fig. 2.1, Fig. 2.2 ,Fig. 2.3 and Fig. 2.4. The analysis was done by using these simplified model

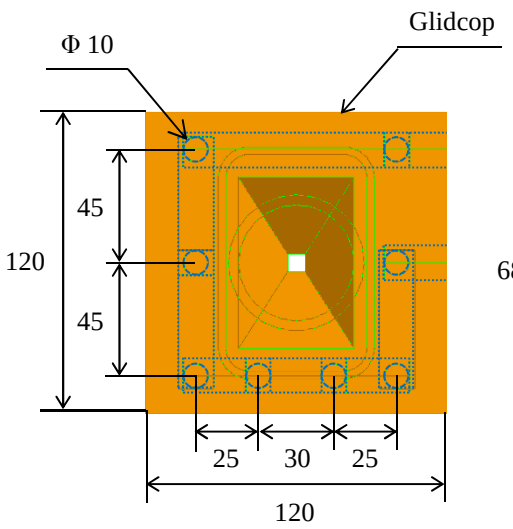

Fig. 2.1 Front view

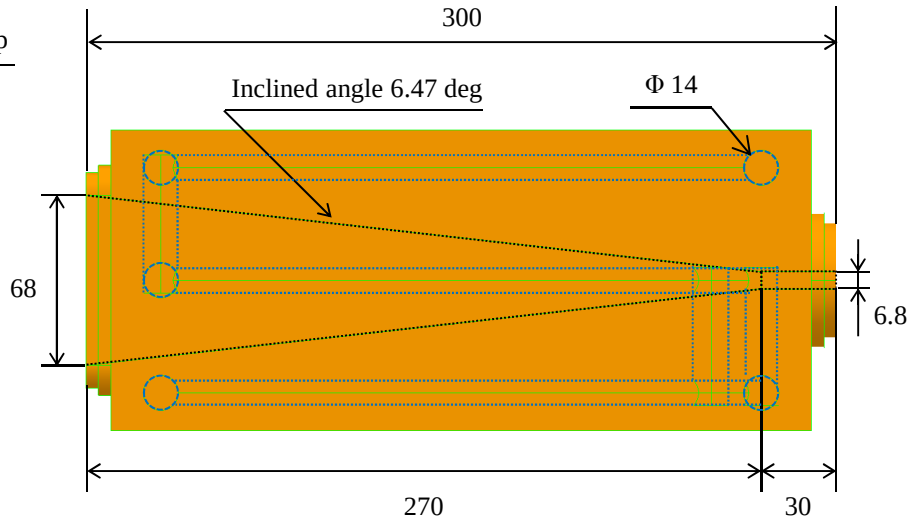

Fig. 2.2 Side view

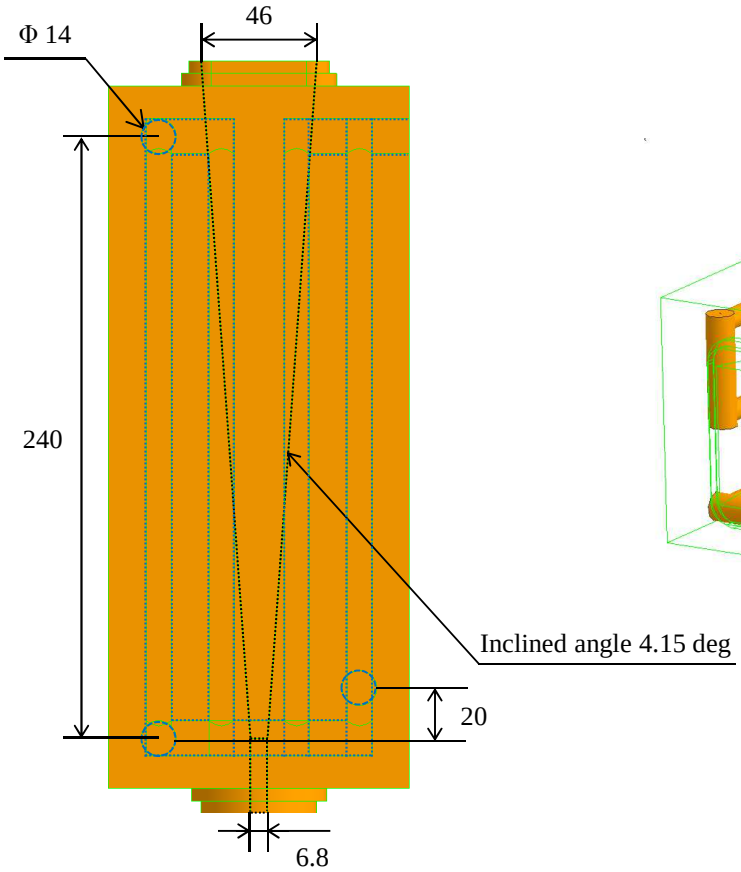

Fig. 2.3 Back view

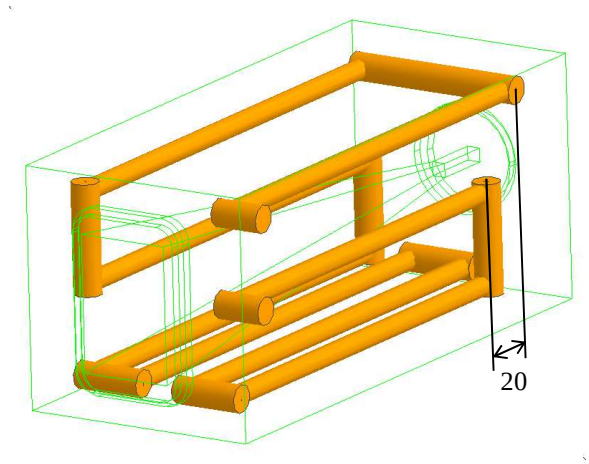

Fig. 2.4 Bird's eye view

3. Boundary conditions

3.1 For thermal analysis

The green area in Fig. 3.1.1 shows the heat input position. We assumed all the white beam irradiate to the WBS and PBS. The yellow surface in Fig. 3.1.2 shows the convection surface. Table 3.1 shows the boundary conditions for thermal analysis. We assumed the convection coefficient is enhanced by wire coil.

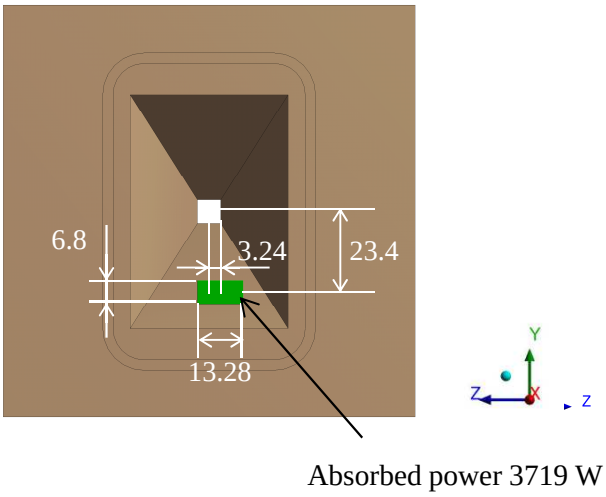

Fig. 3.1.1 Heat input area (Front view)

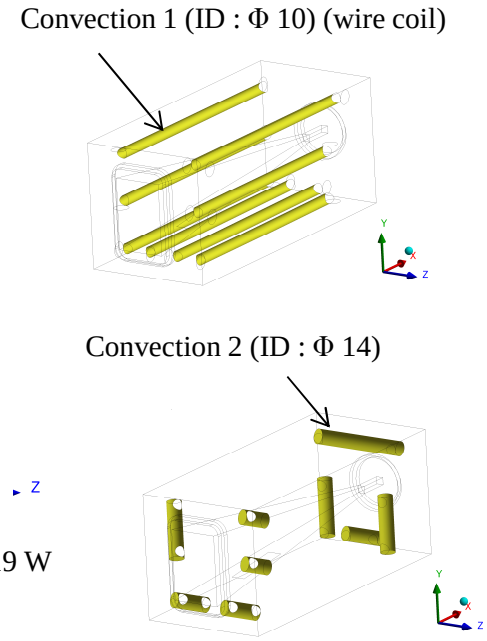

Fig. 3.1.2 convection surface

	Analysis Conditions		
Cooling Water temperature	**29.5**	℃	
Total absorbed power	**3719**	W	
Maximum heat flux	**5.62**	W/mm^2	
Distance from the source	**32.4**	m	
Beam size	H × V = **13.28** mm × **6.804** mm		
Pressure Loss	**0.040**	MPa	
	Convection 1 (wire coil)	Convection 2	
Convection coefficient	**12000**	**3000**	W/m^2・K
Flow rate	**6.0**	**6.0**	L/min
Flow velocity	**1.27**	**0.65**	m/s
Pipe inner diameter	**10**	**14**	mm

Table 3.1 Analysis Conditions

3. Boundary conditions

3.2 For Static structural analysis

Fig. 3.2 shows the support points. All boundary conditions for static structural analysis is shown in Table 3.2.

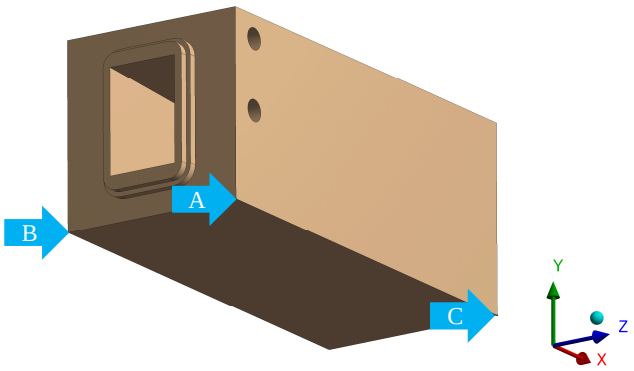

Fig. 3.2 Support Points

	Analysis Conditions	
Point A	**Fixed : X, Y, Z Axis**	
Point B	**Fixed : X, Y Axis**	**Free : Z Axis**
Point C	**Fixed : Y Axis**	**Free : X, Z Axis**
Reference temperature	**29.5**	℃

Table 3.2 Support boundary conditions

3.3 Mesh model

Fig. 3.3 shows the mesh model used for analysis.

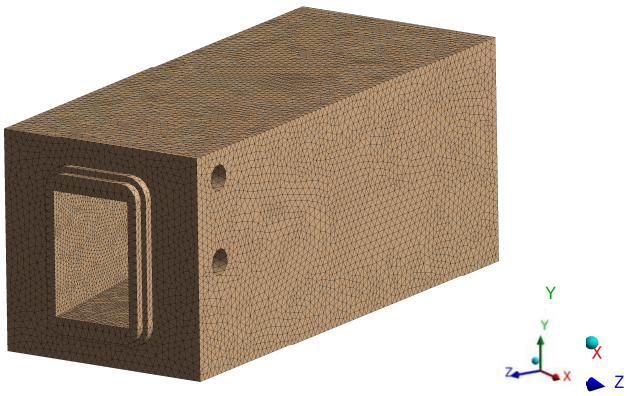

Fig. 3.3 Mesh model

3. Boundary conditions

3.4 Physical properties of materials

Table 3.4 shows the physical properties of materials used for analysis.

	Density	Young's modulus	Poisson's ratio	Thermal Expansion	Thermal Conductivity
Glidcop	8900 kg/m³	1.3E+11 Pa	0.326	1.66E-05 1/K	365 W/m･K

Table 3.4 Physical properties of materials

3.5 Power map calculation

The power map calculation was done by using *SPECTRA software. The Fig. 3.5.1 and Fig. 3.5.2 show the power map which applied for analysis. Table 3.5 show the heat balance sheet.

* T. Tanaka and H. Kitamura, J. Synchrotron Radiation 8 (2001) 1221.
Email : ztanaka@spring8.or.jp
URL : http://radiant.harima.riken.go.jp/spectra/index.html

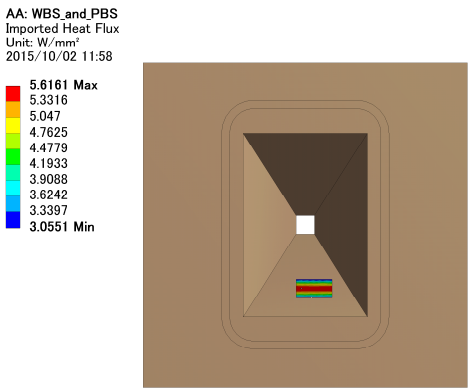

Fig. 3.5.1 Front view of power map

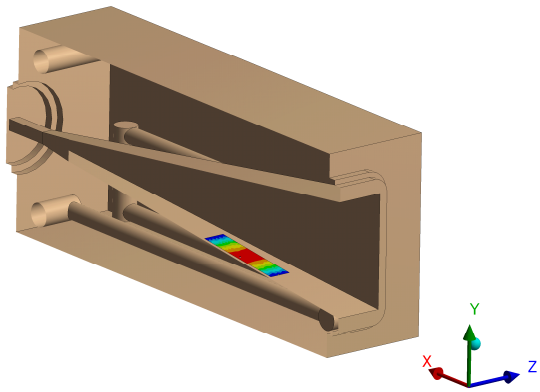

Fig. 3.5.2 Sectional view of power map

Total power calculation		
Total power	**3719**	W
Total absorbed power	**3719**	W
Total passing power	**0**	W

Table 3.5 Heat balance sheet

4. Calculation results

4.1 Temperature profile

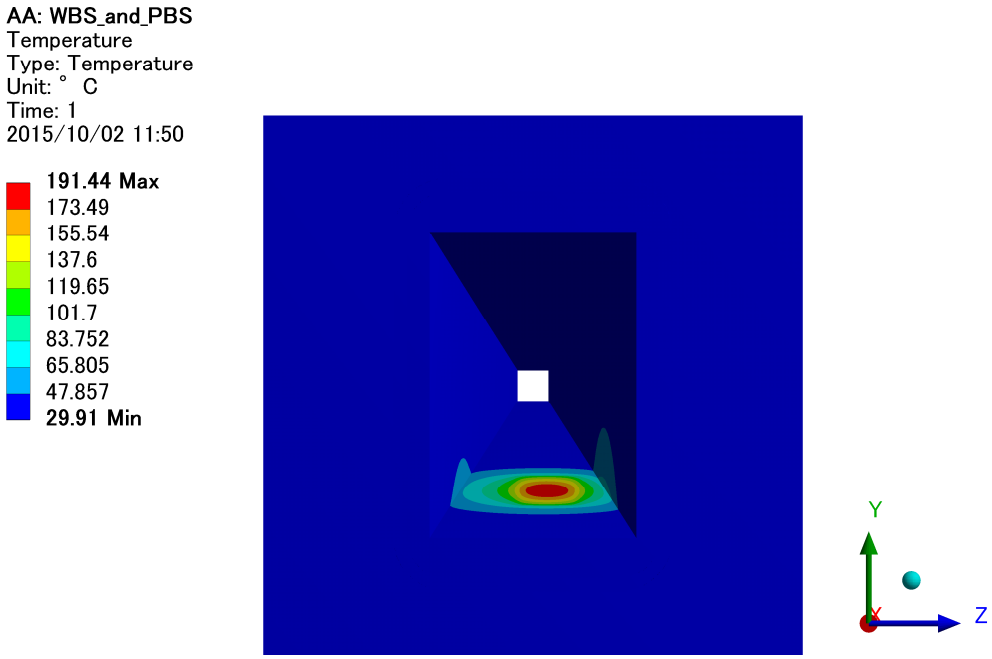

Fig. 4.1.1 Temperature profile

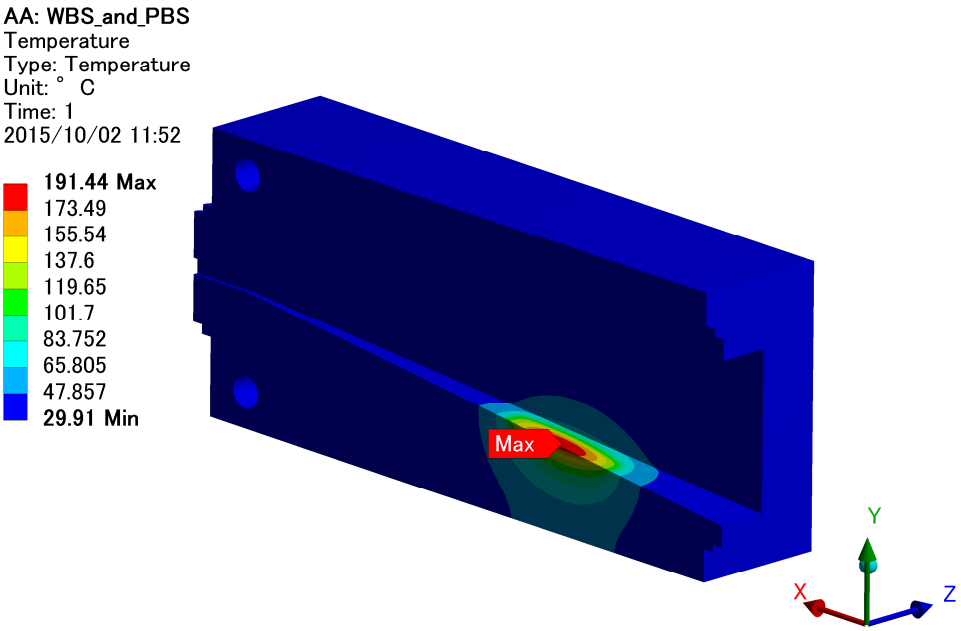

Fig. 4.1.2 Sectional view of temperature profile

4.1 Temperature profile

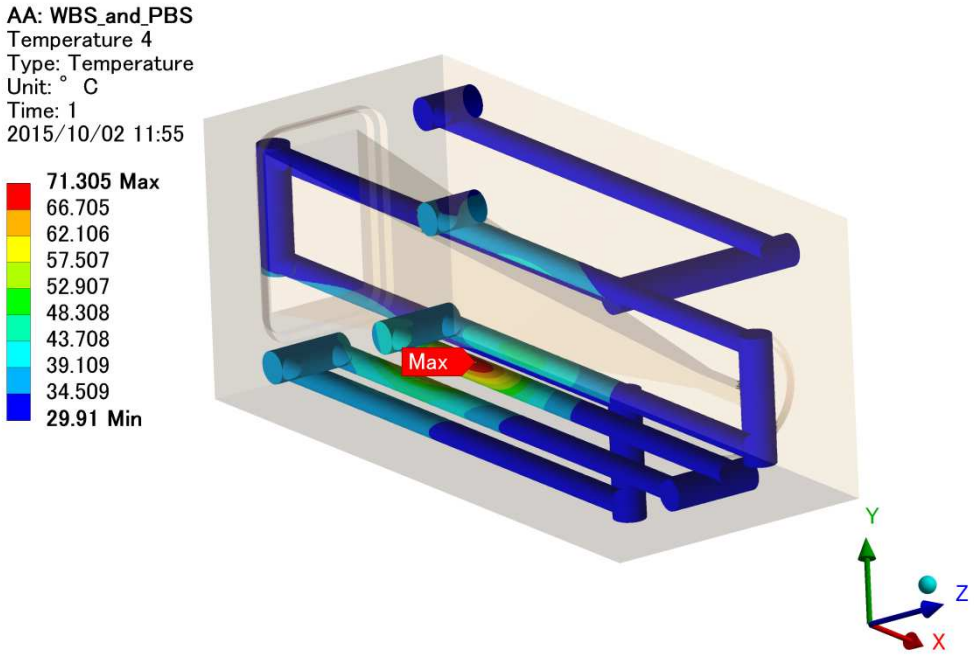

Fig. 4.1.3 Temperature profile of the cooling pipe

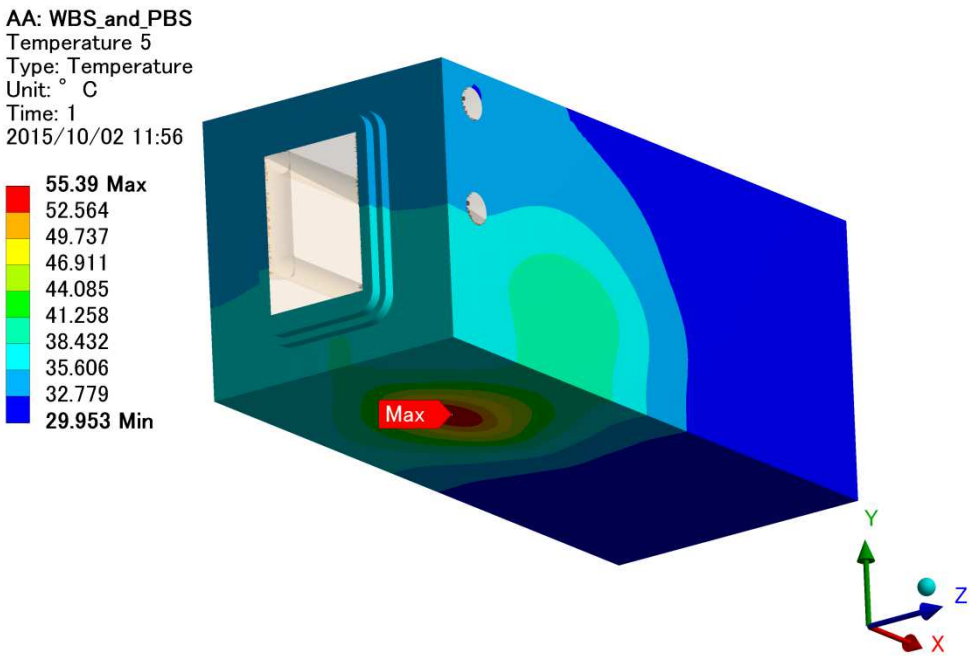

Fig. 4.1.4 Temperature profile of the surface

4.2 Deformation profile

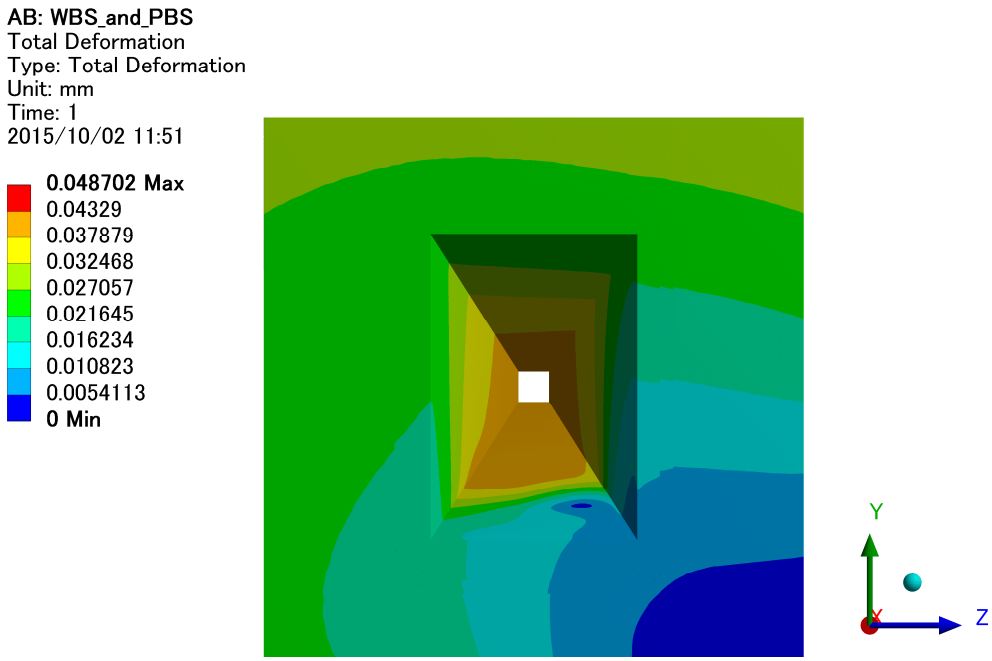

Fig. 4.2.1 Total Deformation

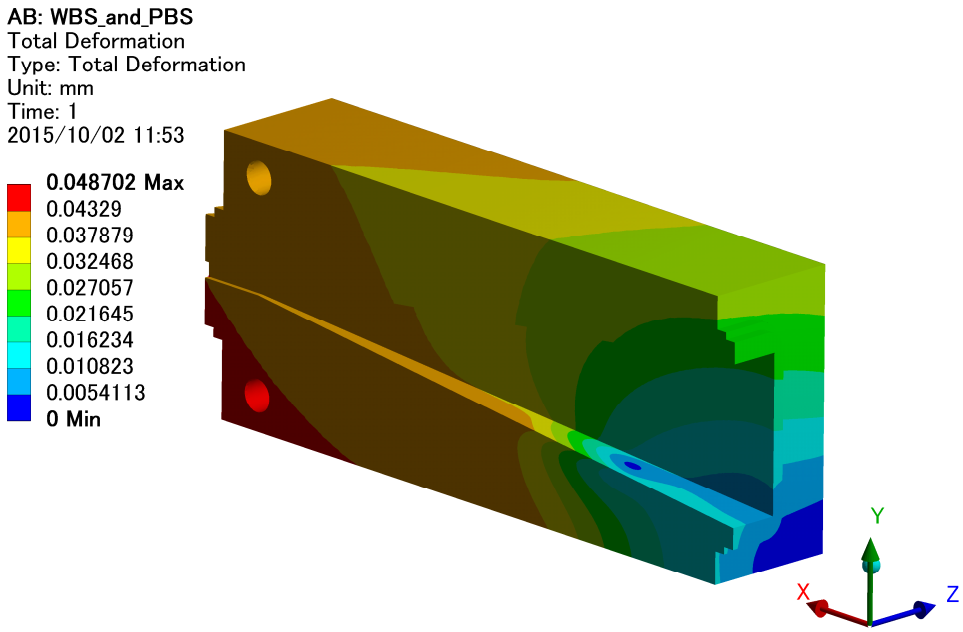

Fig. 4.2.2 Sectional view of Total Deformation

4.3 Stress profile

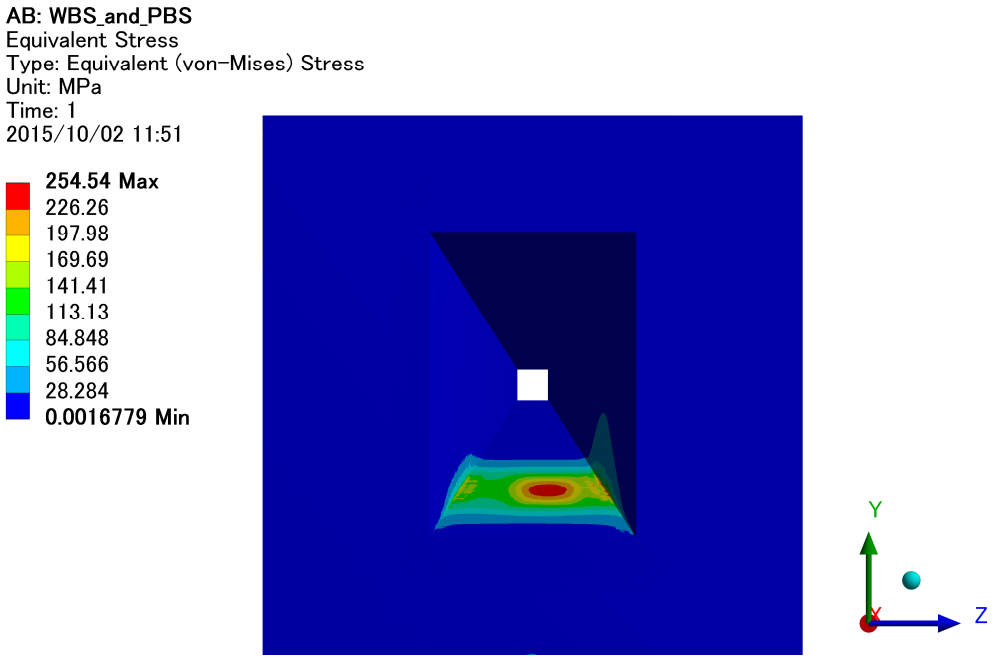

Fig. 4.3.1 Von Mises Stress

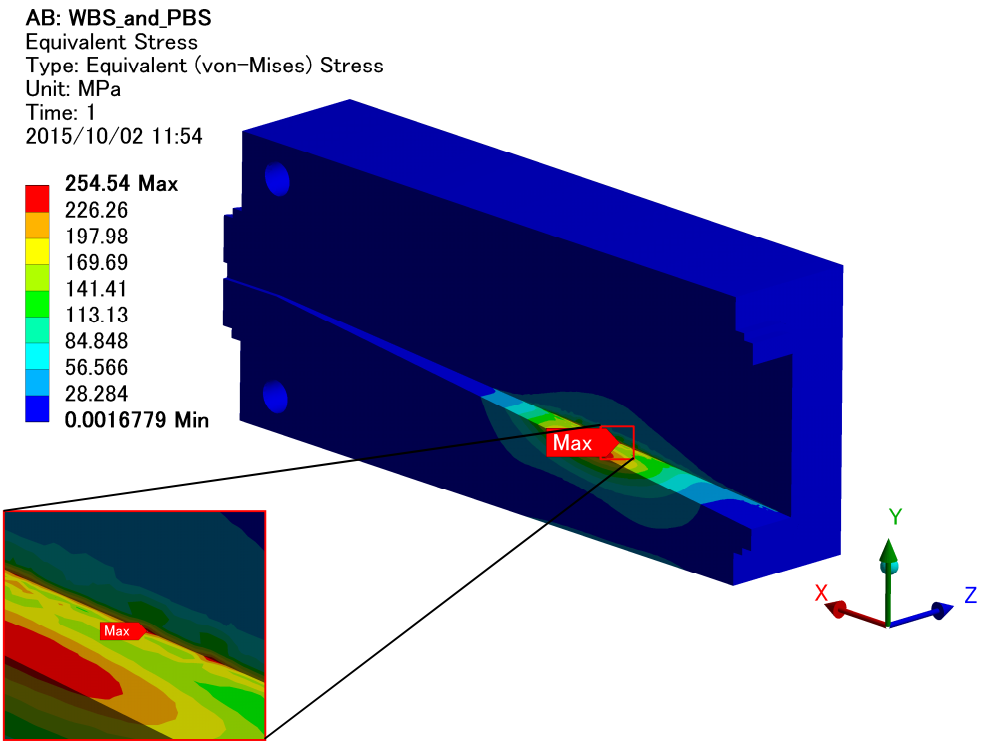

Fig. 4.3.2 Sectional view of Von Mises Stress

4.4 Elastic strain profile

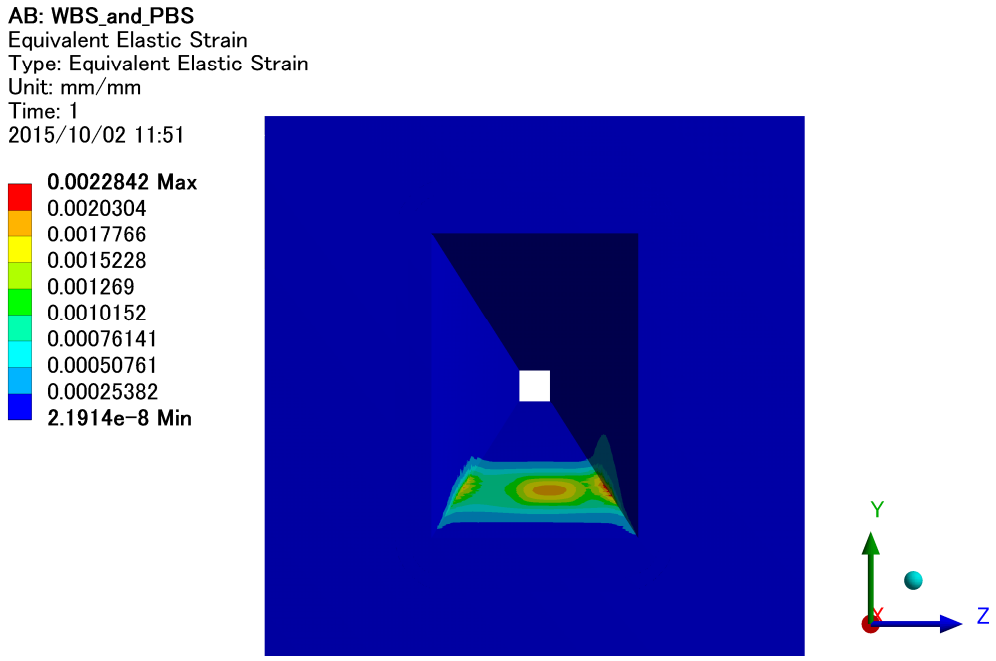

Fig. 4.4.1 Equivalent Elastic Strain

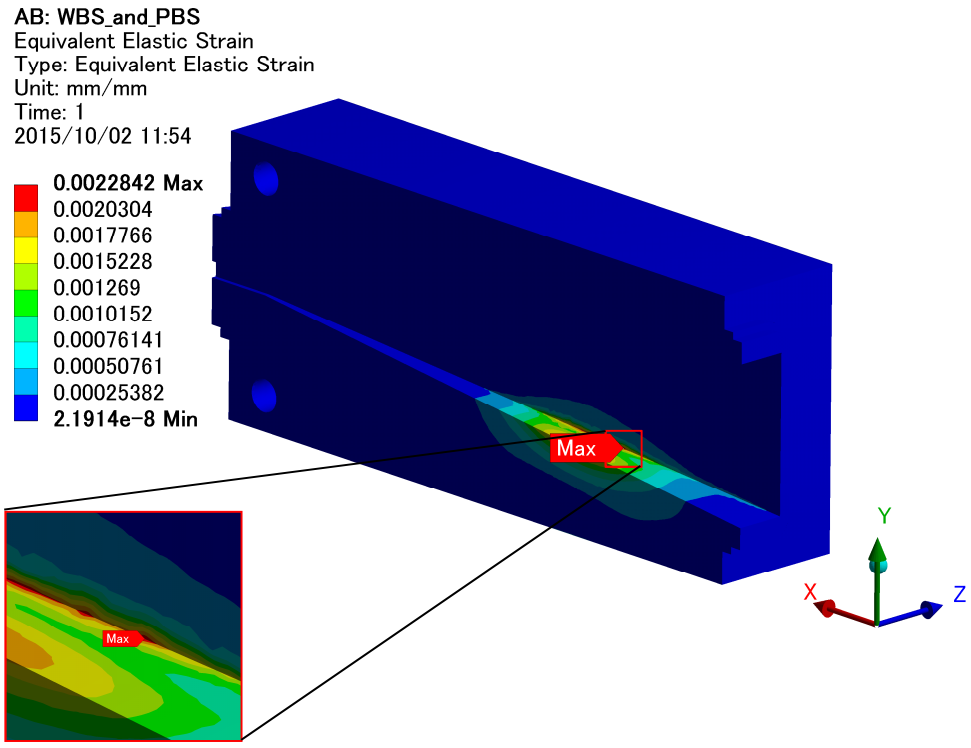

Fig. 4.4.2 Sectional view of Equivalent Elastic Strain

NSLS 2 FXI WBS and PBS

Thermo-Structural analysis

- We assumed some of the synchrotron light is absorbed in collimating mirror.
- The synchrotron light misaligned condition.

TOYAMA Co., Ltd

Date : Oct. 5, 2015

Created by : Tsubota

1. Scope

We have performed thermo-structural analysis of the white beam stop(WBS) and pink beam stop(PBS) of NSLS 2 FXI beamline to evaluate the temperature, deformation, stress and strain profiles. In this report, we assumed the situation that the some of the synchrotron light is absorbed in the collimating mirror and irradiate to the WBS and PBS. The calculation was done by using ANSYS 16.0 Mechanical.

The analysis conditions are listed in Table 1.1. These values are cited from the Technical Specification(NX-C-SPC-FXI-PDS-001). The more detail of the analysis conditions are written in Page 3.

Table 1.2 shows the analysis results. All these analysis results cleared the design criteria(LT-C-XFD-SPC-COM-001).

	Analysis conditions
Total Absorbed Power	**1866** W
Distance from the source	**32.4** m
Beam size	H × V = **13.28** mm × **6.804** mm

Table 1.1. Analysis conditions

	Results
Maximum Temperature	**91.4** ℃
Cooling pipe Temperature	**41.7** ℃
Surface Temperature	**41.7** ℃
Maximum Von Mises Stress	**146** MPa
Maximum Equivalent Elastic Strain	**0.13** %
Substrate material	**Glidcop**

Table 1.2. Results Summary

2. Dimensional drawing

Please see the dimensional drawing of the WBS and PBS in Fig. 2.1, Fig. 2.2 ,Fig. 2.3 and Fig. 2.4. The analysis was done by using these simplified model

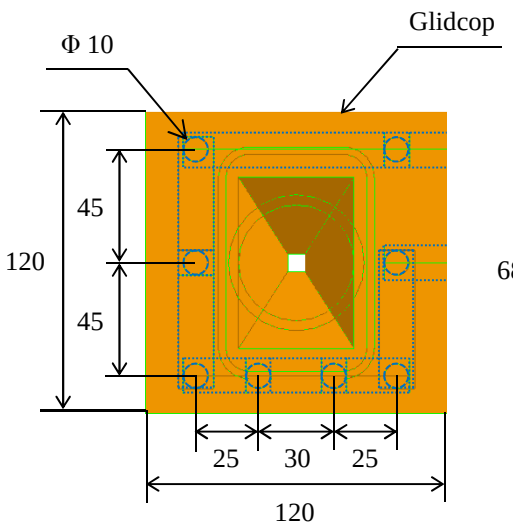

Fig. 2.1 Front view

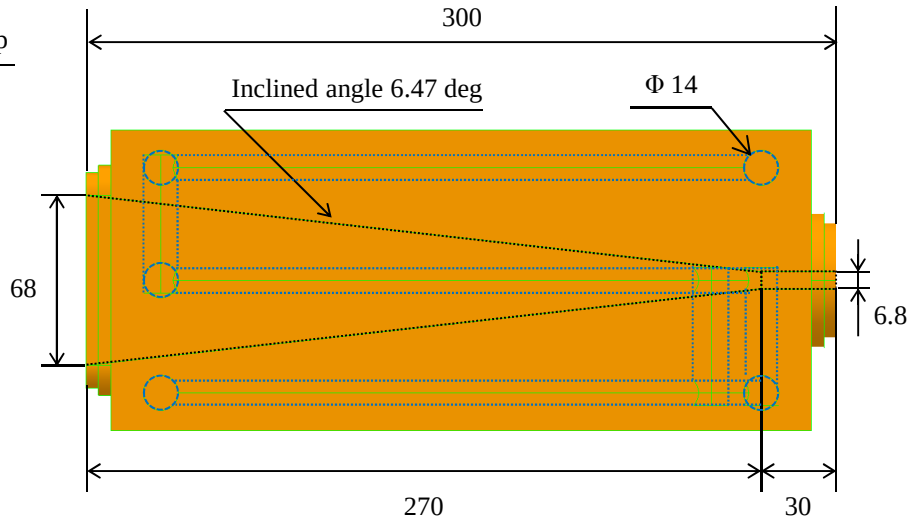

Fig. 2.2 Side view

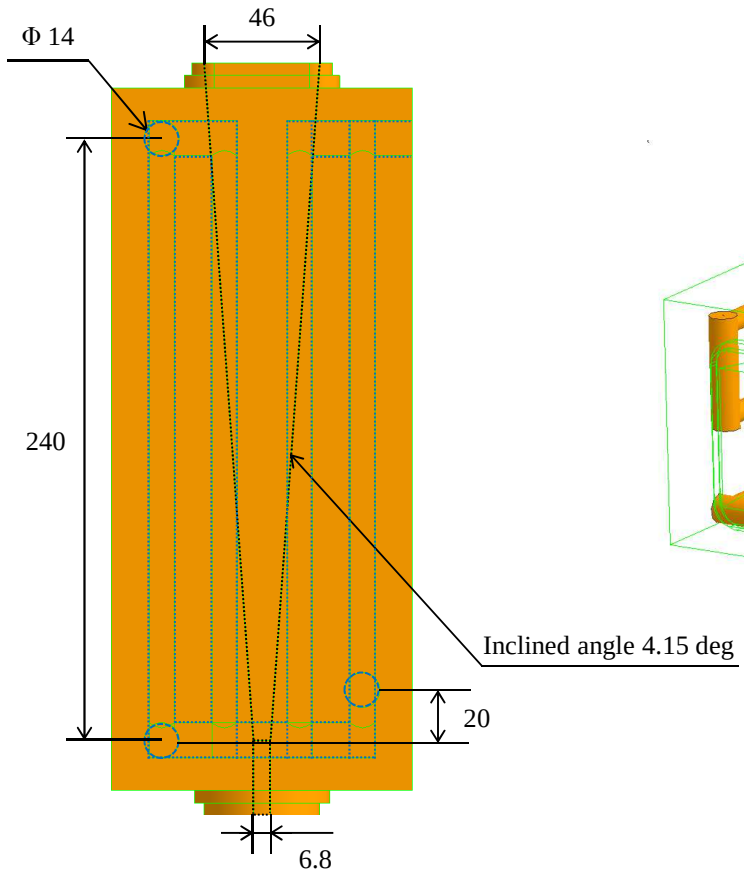

Fig. 2.3 Back view

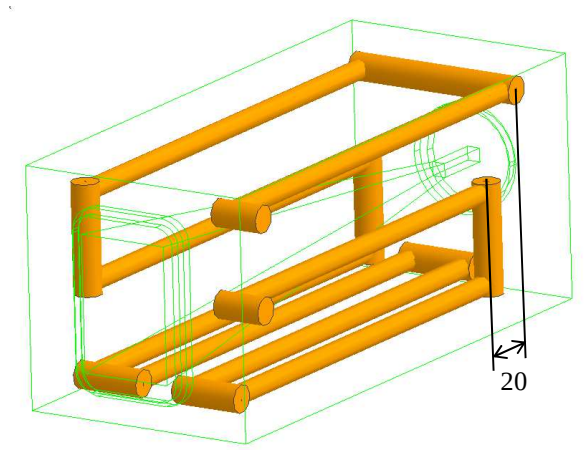

Fig. 2.4 Bird's eye view

3. Boundary conditions

3.1 For thermal analysis

The green area in Fig. 3.1.1 shows the heat input position. We assumed all the white beam irradiate to the WBS and PBS. The yellow surface in Fig. 3.1.2 shows the convection surface. Table 3.1 shows the boundary conditions for thermal analysis. We assumed the convection coefficient is enhanced by wire coil. The detail of power map applied to the fixed mask is shown in Page 5.

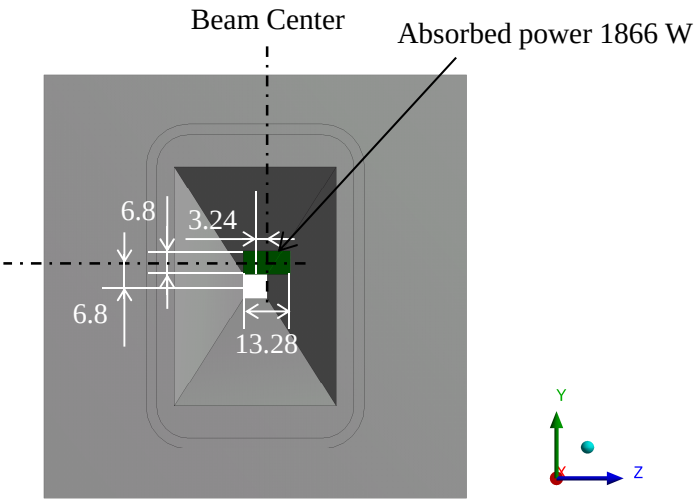

Fig. 3.1.1 Heat input area (Front view)

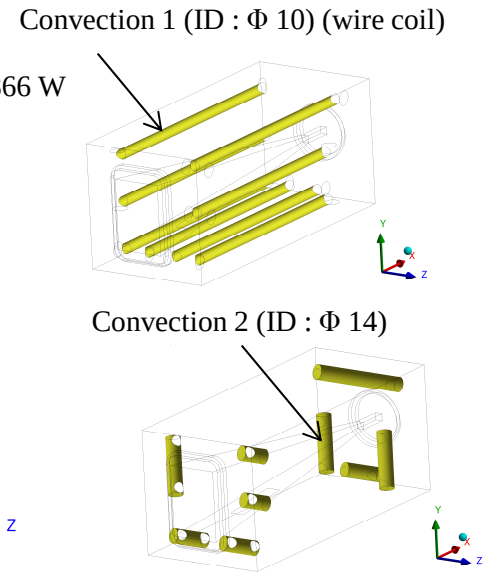

Fig. 3.1.2 convection surface

	Analysis Conditions		
Cooling Water temperature	**29.5**	℃	
Total absorbed power	**1866**	W	
Maximum heat flux	**2.49**	W/mm^2	
Distance from the source	**32.4**	m	
Beam size	H × V = **13.28** mm × **6.804** mm		
Pressure Loss	**0.040**	MPa	
	Convection 1 (wire coil)	Convection 2	
Convection coefficient	**12000**	**3000**	W/m^2・K
Flow rate	**6.0**	**6.0**	L/min
Flow velocity	**1.27**	**0.65**	m/s
Pipe inner diameter	**10**	**14**	mm

Table 3.1 Analysis Conditions

3. Boundary conditions

3.2 For Static structural analysis

Fig. 3.2 shows the support points. All boundary conditions for static structural analysis is shown in Table 3.2.

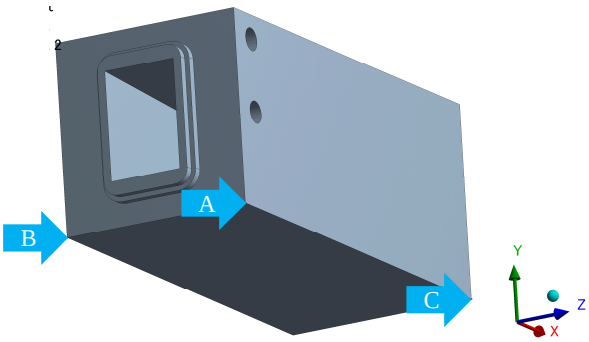

Fig. 3.2 Support Points

	Analysis Conditions	
Point A	**Fixed : X, Y, Z Axis**	
Point B	**Fixed : X, Y Axis**	**Free : Z Axis**
Point C	**Fixed : Y Axis**	**Free : X, Z Axis**
Reference temperature	**29.5**	℃

Table 3.2 Support boundary conditions

3.3 Mesh model

Fig. 3.3 shows the mesh model used for analysis.

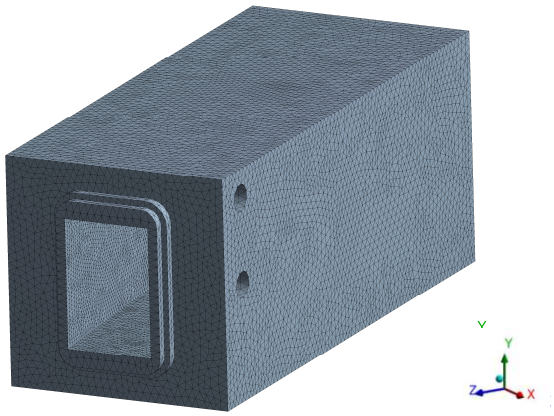

Fig. 3.3 Mesh model

3. Boundary conditions

3.4 Physical properties of materials

Table 3.4 shows the physical properties of materials used for analysis.

	Density	Young's modulus	Poisson's ratio	Thermal Expansion	Thermal Conductivity
Glidcop	8900 kg/m³	1.3E+11 Pa	0.326	1.66E-05 1/K	365 W/m･K

Table 3.4 Physical properties of materials

3.5 Power map calculation

The power map calculation was done by using *SPECTRA software. The Fig. 3.5.1 and Fig. 3.5.2 show the power map which applied for analysis. We assumed some of the synchrotron light is absorbed in collimating mirror. Table 3.5 show the heat balance sheet.

* T. Tanaka and H. Kitamura, J. Synchrotron Radiation 8 (2001) 1221.
Email : ztanaka@spring8.or.jp
URL : http://radiant.harima.riken.go.jp/spectra/index.html

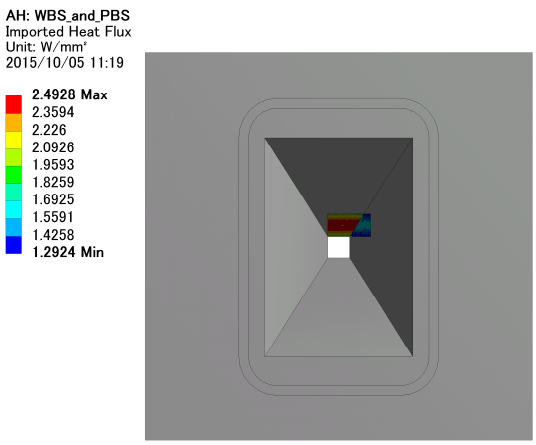

Fig. 3.5.1 Front view of power map

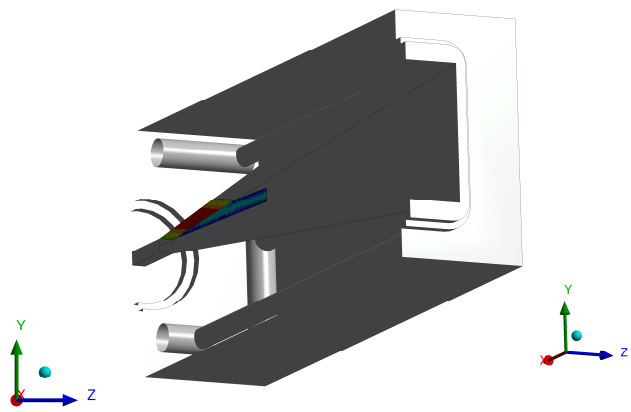

Fig. 3.5.2 Sectional view of power map

Total power calculation		
Total power	**1866**	W
Total absorbed power	**1866**	W
Total passing power	**0**	W

Table 3.5 Heat balance sheet

4. Calculation results

4.1 Temperature profile

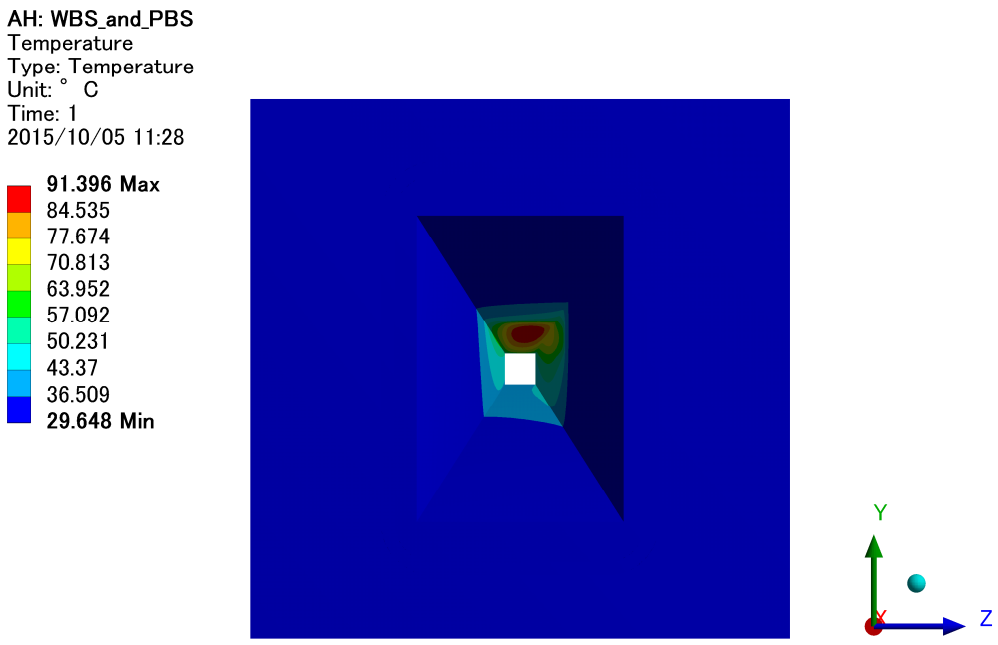

Fig. 4.1.1 Temperature profile

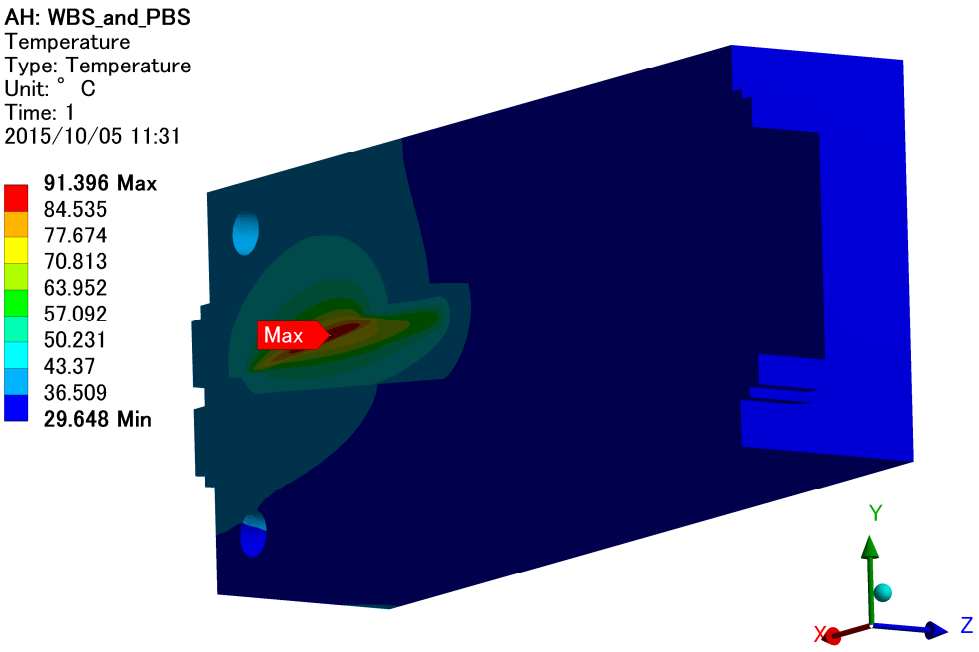

Fig. 4.1.2 Sectional view of temperature profile

4.1 Temperature profile

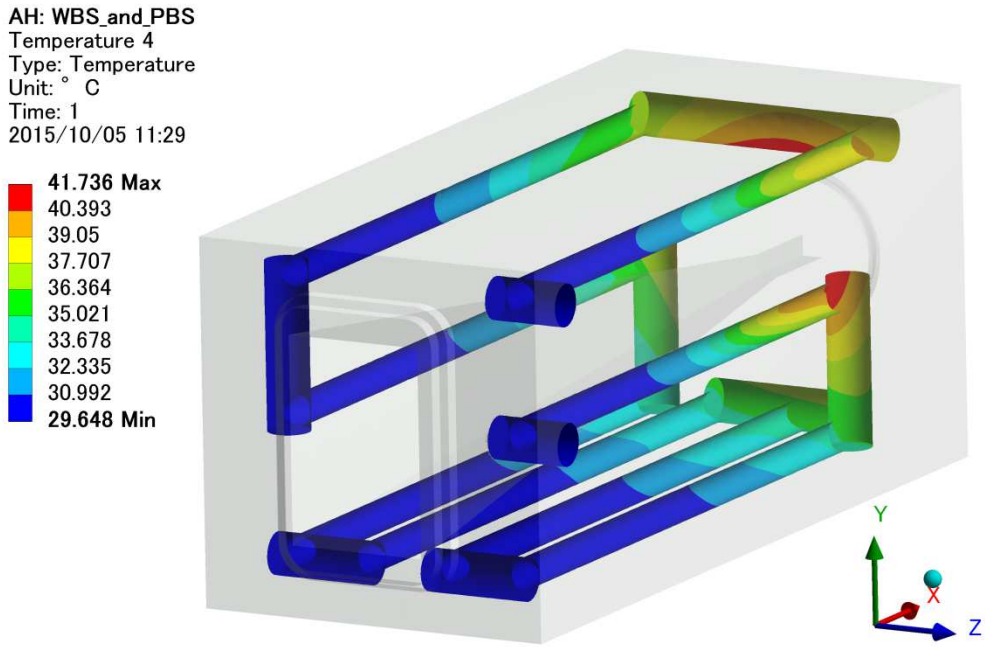

Fig. 4.1.3 Temperature profile of the cooling pipe

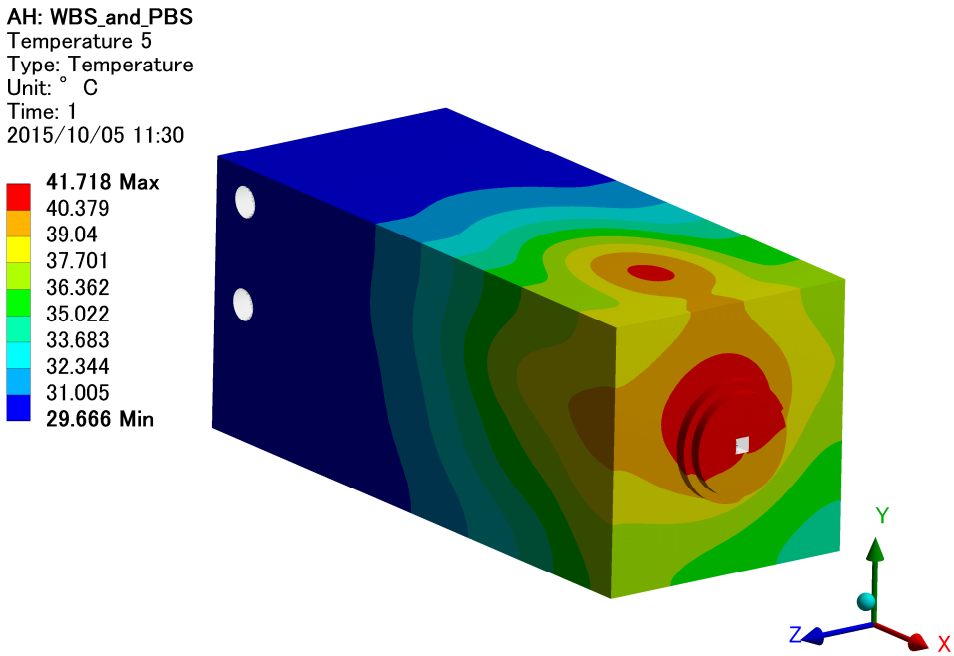

Fig. 4.1.4 Temperature profile of the surface

4.2 Deformation profile

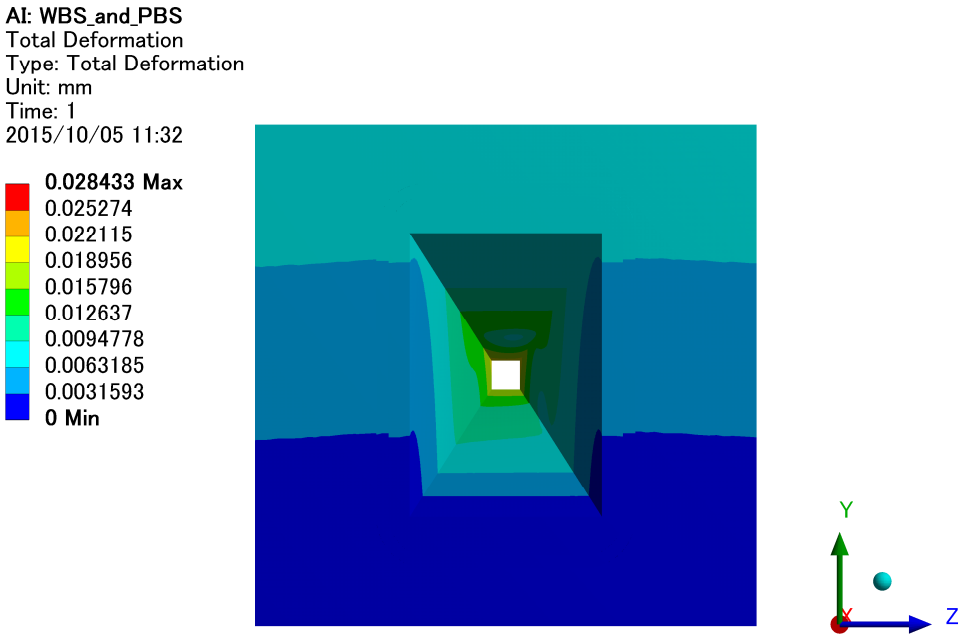

Fig. 4.2.1 Total Deformation

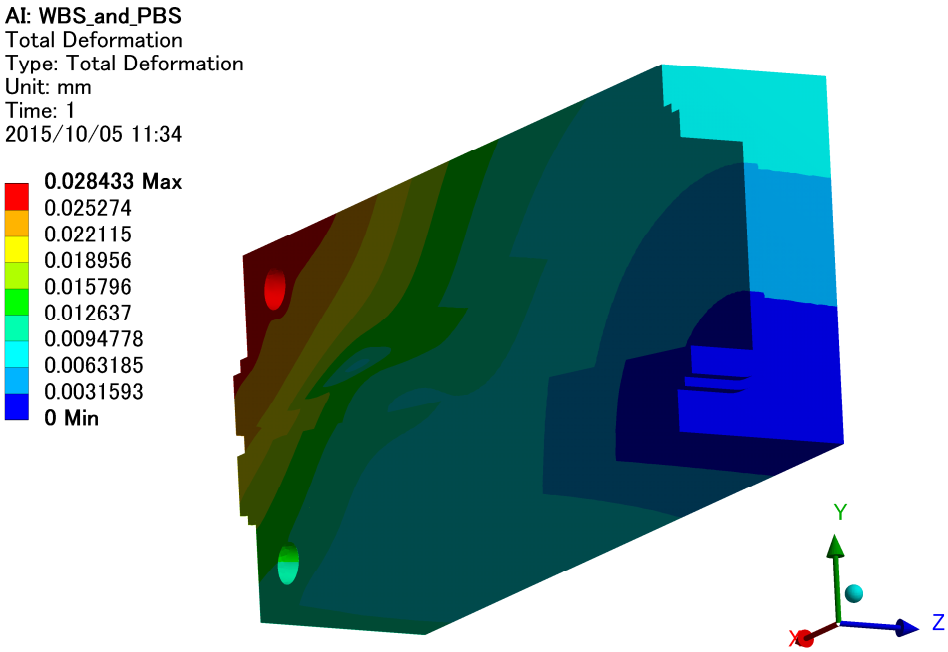

Fig. 4.2.2 Sectional view of Total Deformation

4.3 Stress profile

Fig. 4.3.1 Von Mises Stress

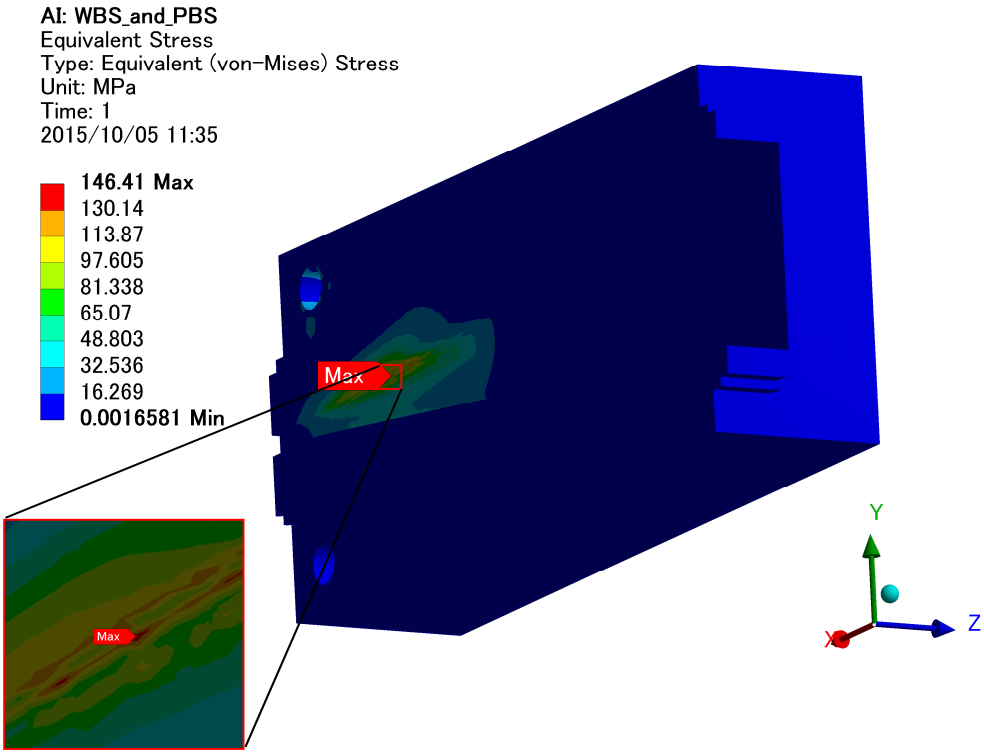

Fig. 4.3.2 Sectional view of Von Mises Stress

4.4 Elastic strain profile

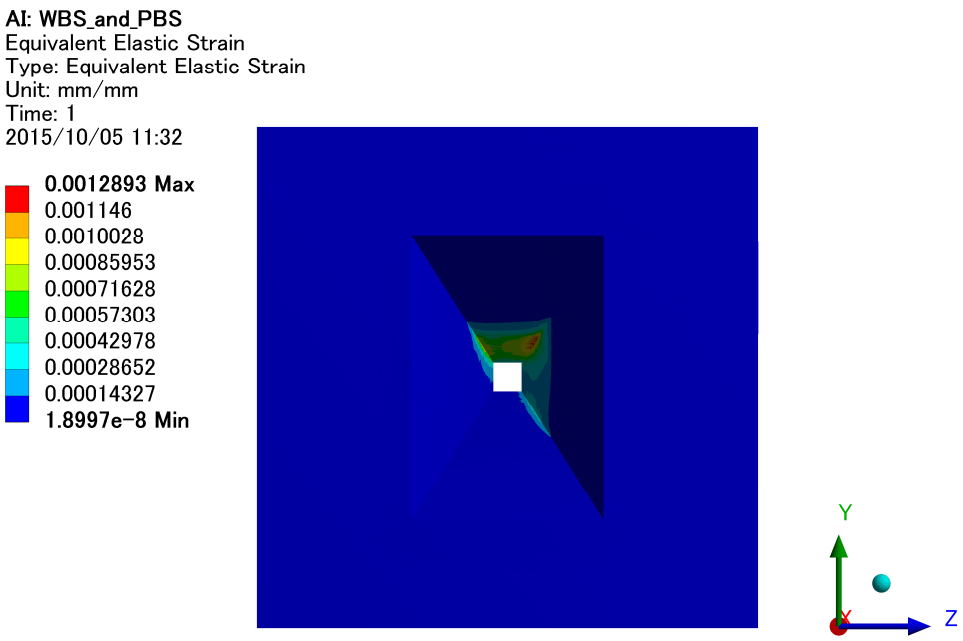

Fig. 4.4.1 Equivalent Elastic Strain

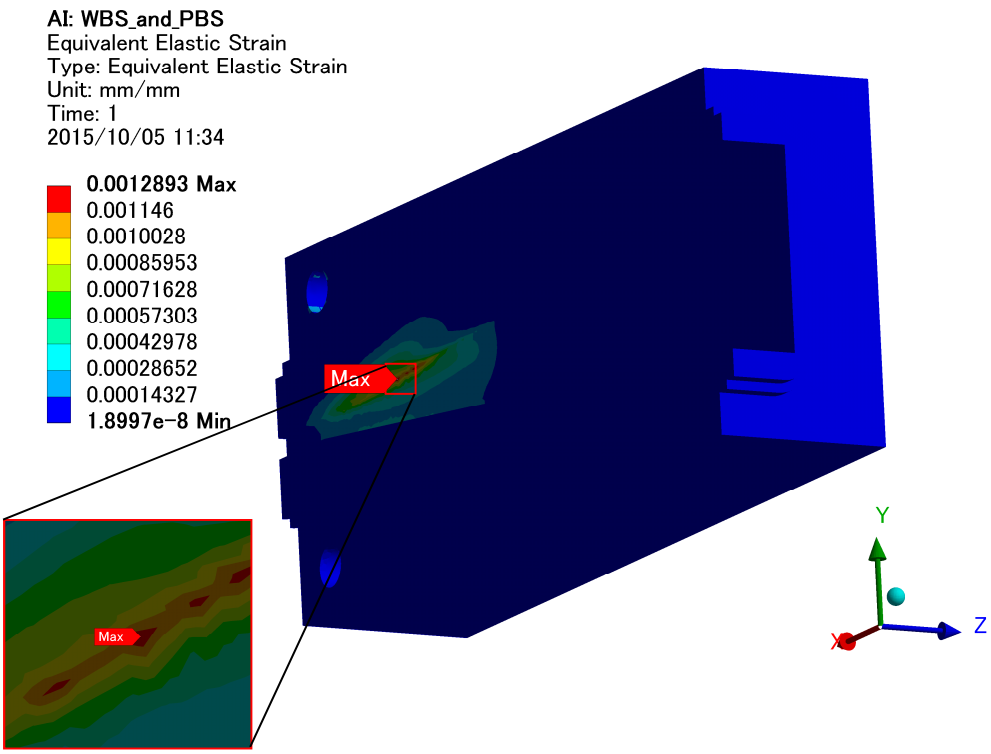

Fig. 4.4.2 Sectional view of Equivalent Elastic Strain

NSLS 2 FXI Pink Beam Slit

Thermo-Structural analysis

TOYAMA Co., Ltd

Date : Nov. 7, 2015

Created by : Tsubota

1. Scope

We have performed thermo-structural analysis of the pink beam slit of NSLS 2 FXI beamline to evaluate the temperature, deformation, stress and strain profiles. In this report, we have calculated the situation that the largest heat load irradiates the heavy alloy blade. The calculation was done by using ANSYS 16.0 Mechanical.

The analysis conditions are listed in Table 1.1. These values are cited from the Technical Specification(NX-C-SPC-FXI-PDS-001). The more detail of the analysis conditions are written in Page 3.

Table 1.2 shows the analysis results.

	Analysis conditions
Total Absorbed Power	**956** W
Distance from the source	**33.4** m
Incident Beam	**H × V = 0.21 mrad × 0.21 mrad**

Table 1.1 Analysis conditions

	Results
Maximum Temperature	**763** ℃
Cooling pipe Temperature	**113** ℃
Maximum Von Mises Stress	**221** MPa
Maximum Equivalent Elastic Strain	**0.073** %
Substrate material	**Heavy alloy (HAC2)**

Table 1.2 Results Summary

2. Dimensional drawing

Please see the dimensional drawing of the pink beam slit of Fig. 2.1, Fig. 2.2 and Fig. 2.3. Fig. 2.4 show the magnified view of the heavy alloy slit. The analysis was done by using these simplified model

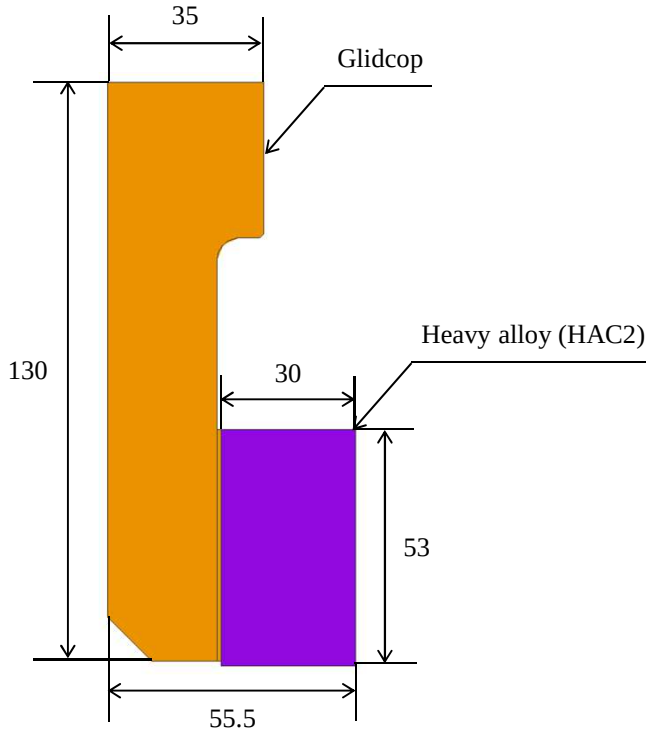

Fig. 2.1 Front view

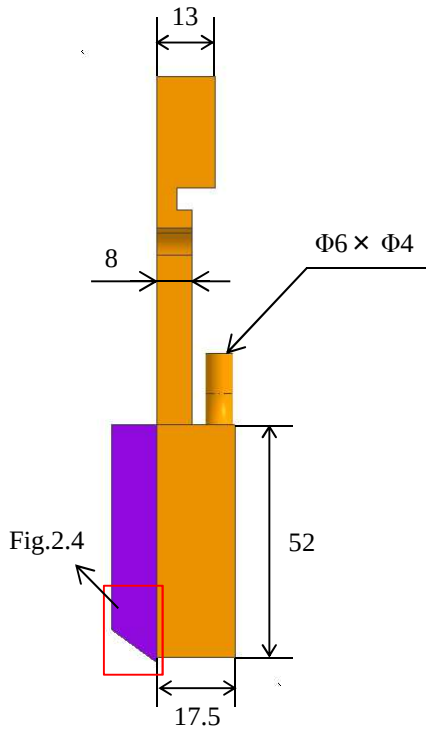

Fig. 2.2 Side view

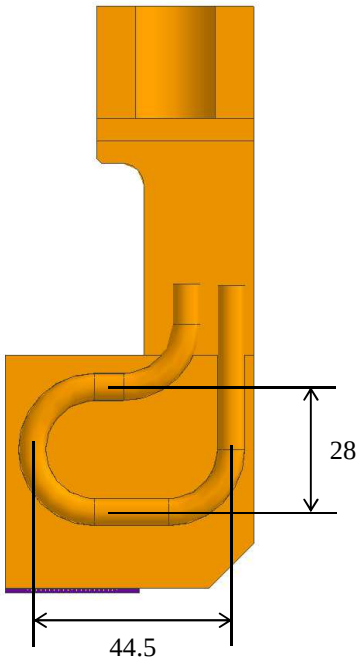

Fig. 2.3 Back view

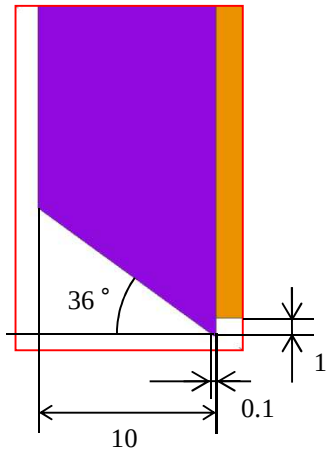

Fig. 2.4 Magnified view

3. Boundary conditions

3.1 For thermal analysis

The green area in Fig. 3.1.1 shows the heat input position. We assumed all the pink beam irradiate the center of the one heavy alloy slit. The detail of power map is shown in Page 5. The yellow surface in Fig. 3.1.2 shows the convection surface. Table 3.1 shows the boundary conditions for thermal analysis. Since we plan to insert Ag sheet between glidcop and heavy alloy, the calculation was done by assuming the enhanced thermal contact conductance.

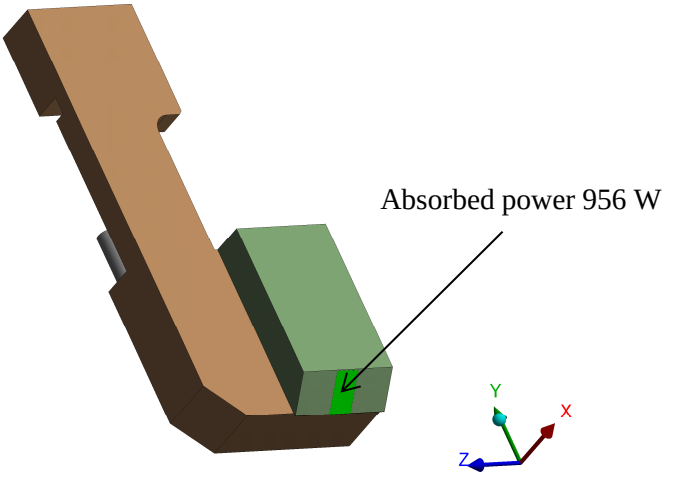

Fig. 3.1.1 Heat input area

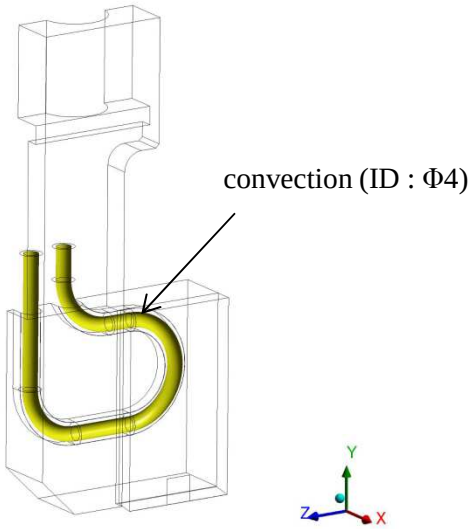

Fig. 3.1.2 convection surface

	Analysis Conditions	
Cooling Water temperature	**29.5**	℃
Total absorbed power	**956**	W
Maximum heat flux	**12.7**	W/mm^2
Distance from the source	**33.4**	m
Beam Size	**H × V = 7.014 mm × 7.014 mm**	
Convection coefficient	**10000**	W/m^2・K
Flow rate	**1.5**	L/min
Flow velocity	**2.0**	m/s
Pipe inner diameter	**4**	mm
Pressure Loss	**0.019**	MPa
Thermal contact conductance between Glidcop and heavy alloy	**10000**	W/m^2・K

Table 3.1 Analysis Conditions

3. Boundary conditions

3.2 For Static structural analysis

Fig. 3.2 shows the support boundary conditions. All boundary conditions for static structural analysis is shown in Table 3.2.

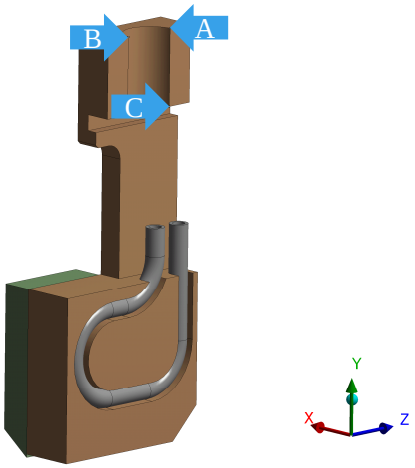

	Analysis Conditions	
Point A	**Fixed : X, Y, Z Axis**	
Point B	**Fixed : X, Y Axis**	**Free : Z Axis**
Point C	**Fixed : X Axis**	**Free : Y, Z Axis**
Reference temperature	**29.5**	℃

Table 3.2 Support boundary conditions

3.3 Mesh model

Fig. 3.3 shows the mesh model used for analysis.

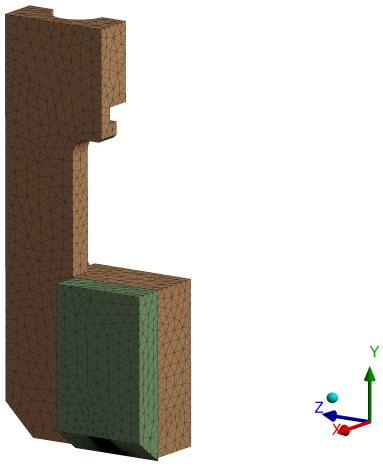

Fig. 3.3 Mesh model

3. Boundary conditions

3.4 Physical properties of materials

Table 3.4 shows the physical properties of materials used for analysis.

	Density [kg/m^3]	Young's modulus [Pa]	Poisson's ratio	Thermal Expansion [1/K] (27 ℃)	Thermal Conductivity [W/m・K] (27 ℃)	Yield Stress [MPa]
Glidcop	8900	1.3E+11	0.326	1.66E-05	365	358
OFHC	8940	1.18E+11	0.34	1.65E-05	389	-
Heavy alloy (HAC2)	17900	3.0E+11	0.28	5.50E-06	120	600

Table 3.4 Physical properties of materials

3.5 Power map calculation

The power map calculation was done by using SPECTRA * software. The Fig. 3.5 shows the power map which applied for analysis. We assumed the synchrotron light is absorbed in PBSL. Table 3.5 shows the heat balance sheet.

* : T. Tanaka and H. Kitamura, J. Synchrotron Radiation 8 (2001) 1221.
Email : ztanaka@spring8.or.jp
URL : http://radiant.harima.riken.go.jp/spectra/index.html

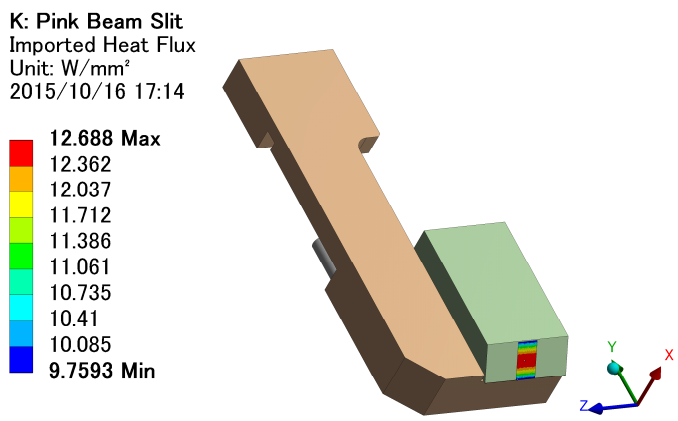

Fig. 3.5 Front view of power map

Total power calculation		
Total power	**956**	W
Irradiation power to heavy alloy	**956**	W
Irradiation power to Glidcop	**0**	W

Table 3.5 Heat balance sheet

4. Calculation results

4.1 Temperature profile

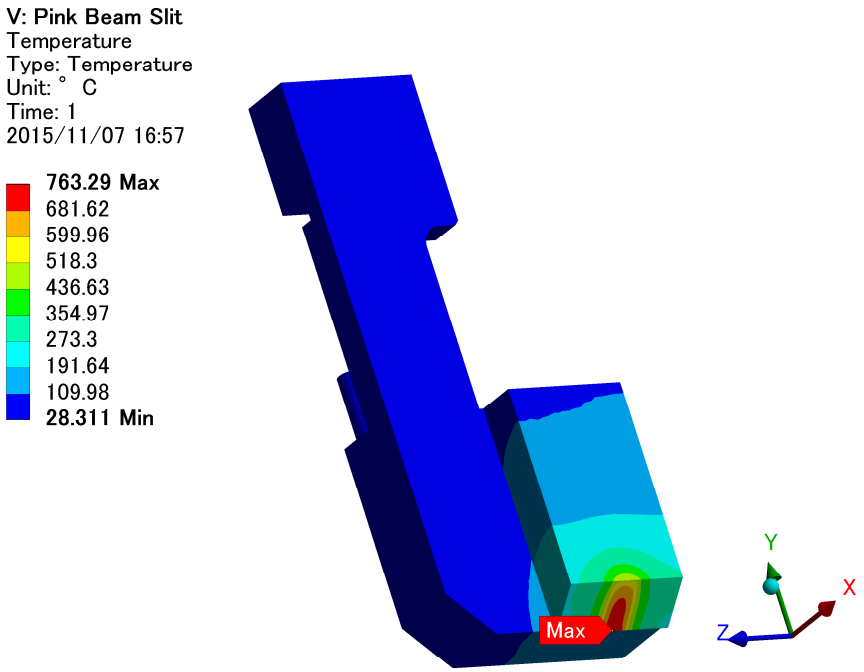

Fig. 4.1.1 Temperature profile

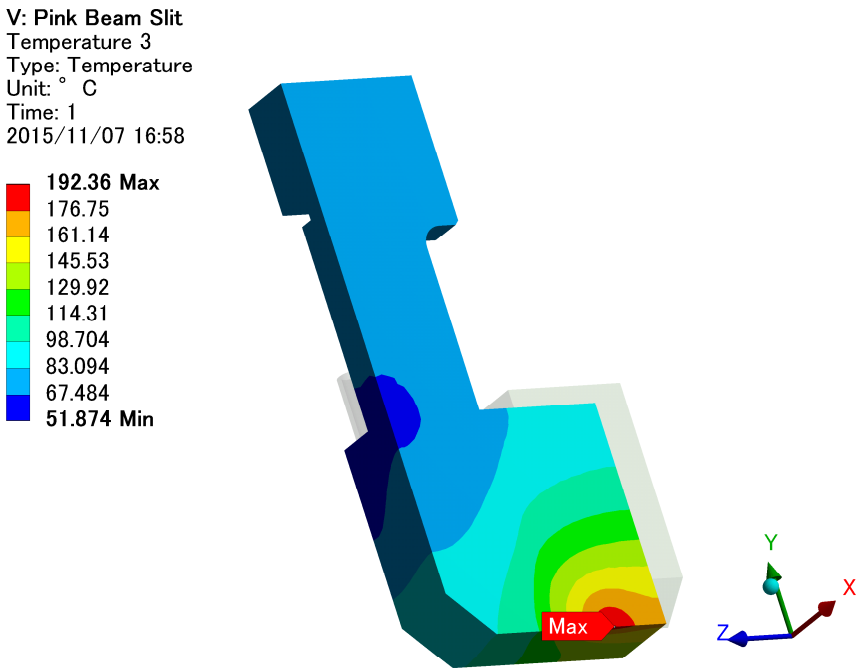

Fig. 4.1.2 Temperature profile of the Glidcop

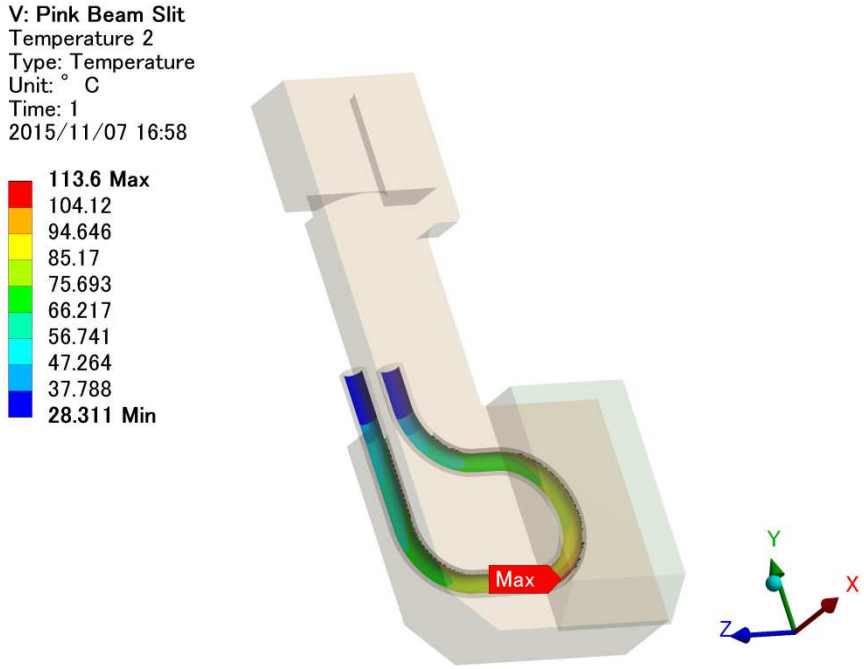

Fig. 4.1.3 Temperature profile of the cooling pipe

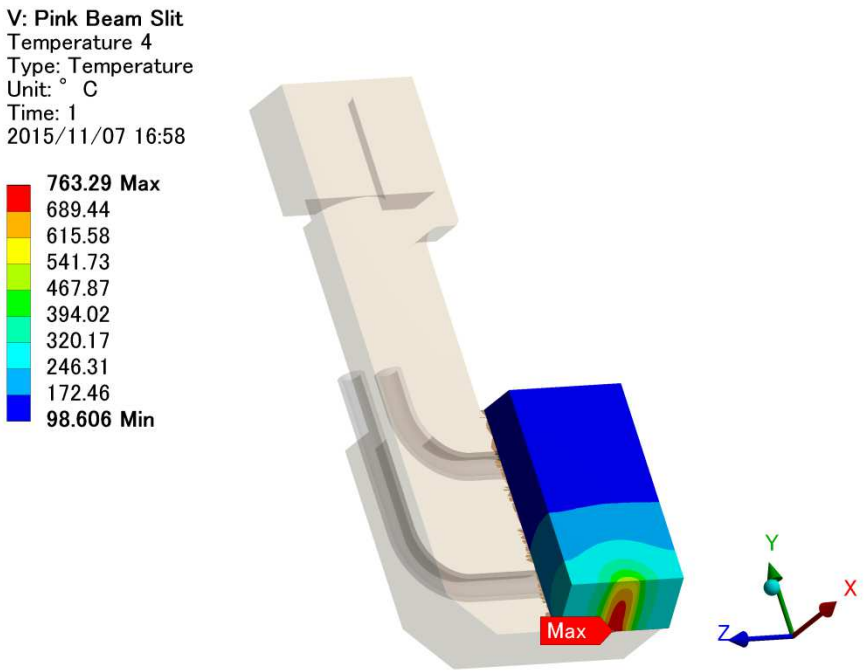

Fig. 4.1.4 Temperature profile of the Heavy alloy

4.2 Deformation profile

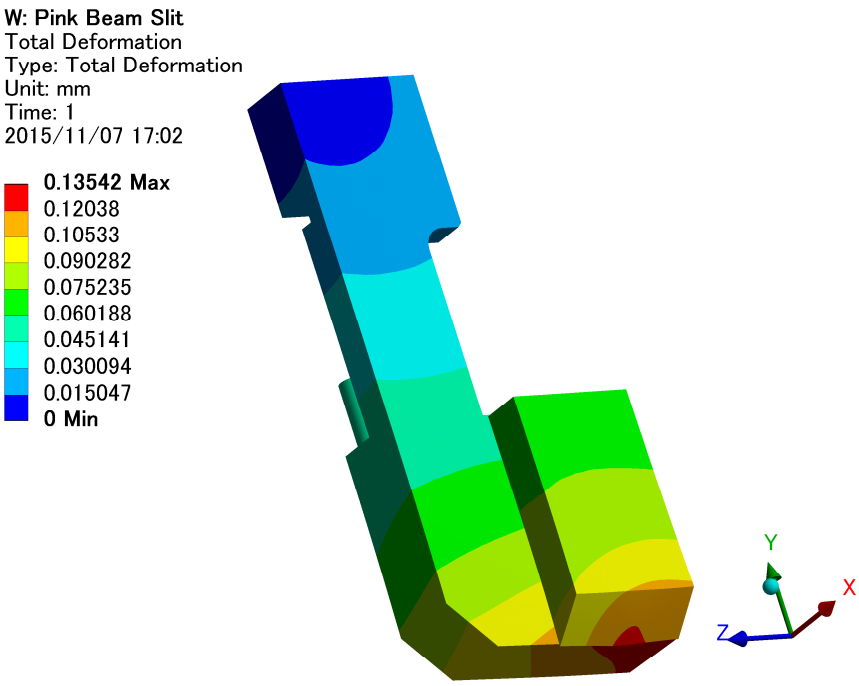

Fig. 4.2.1 Total deformation

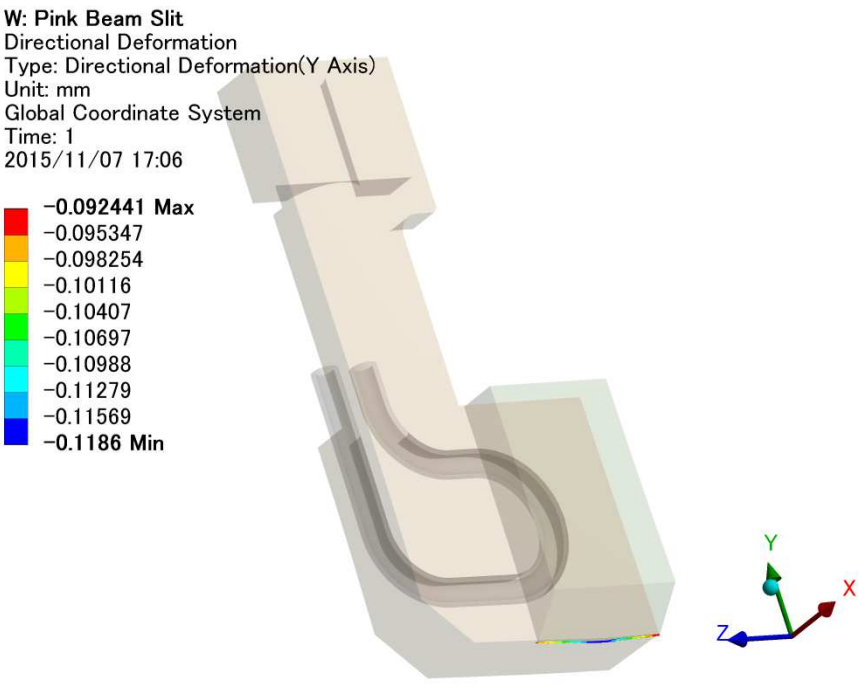

Fig. 4.2.2 Slit edge of directional deformation (Y Axis)

4.3 Stress profile

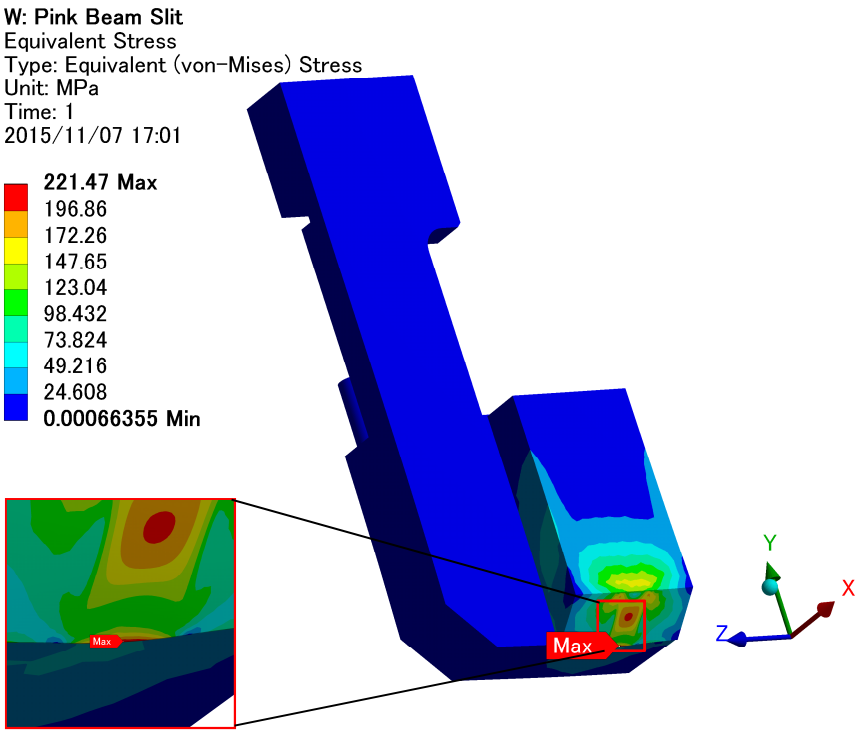

Fig. 4.3 Von Mises Stress

4.4 Elastic strain profile

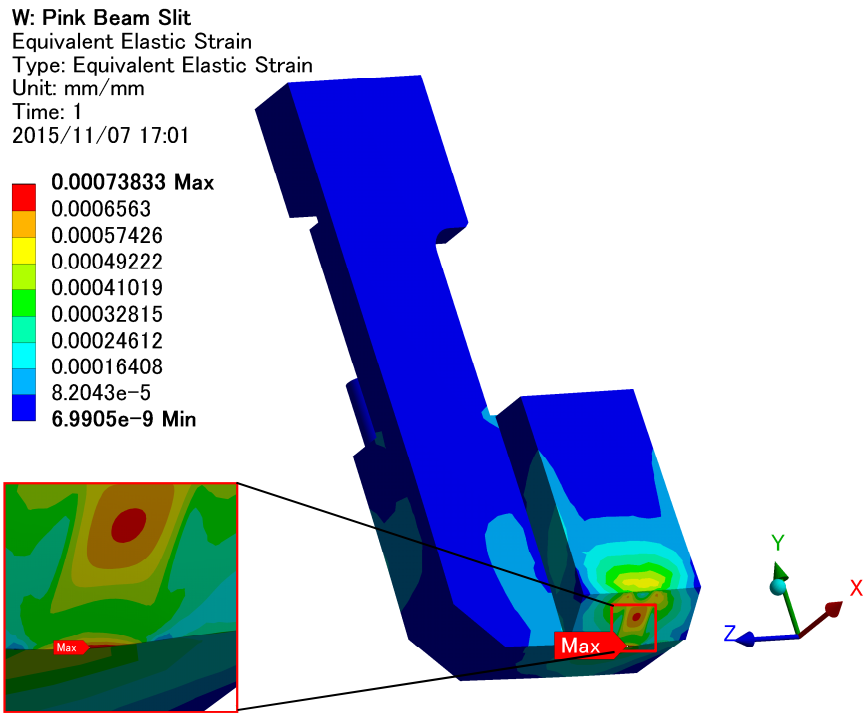

Fig. 4.4 Equivalent Elastic Strain

NSLS 2 FXI PBSL

Pressure Vessel Structural analysis
- Vacuum and High inner pressure condition -

TOYAMA Co., Ltd

Date : Nov. 19, 2015

Created by : Hanashima

1. Scope

We have performed Pressure Vessel structural analysis of the Pink Beam Slits(PBSL) chamber of NSLS 2 FXI beamline to evaluate the deformation, stress and strain profiles. In this report, we assumed the High inner pressure is 15 psig when the vessel subject to back fill pressurization. The calculation was done by using ANSYS 16.0 Professional.

The analysis conditions are listed in Table 1.1. These values are cited from the Vacuum Consensus Guidelines (BNL-81715-2008-IR_Vacuum_Consensus_Guidelines_for_DOE_Labs). The more detail of the analysis conditions are written in Page 3 to 4.

Table 1.2 shows the analysis results. All these analysis results cleared the design criteria (BNL-81715-2008-IR).

	Vessel Pressure [Pa]		Gravity [m/s^2]
	Internal	External	
Vacuum condition	**0**	**101300**	**9.8**
High inner pressure condition	**103421 (15 psig)**	**0**	

Table 1.1 Analysis conditions

		Results	
Vacuum condition	Maximum deformation	**0.04**	mm
	Maximum Von Mises Stress	**22**	MPa
	Maximum Equivalent Elastic Strain	**0.01**	%
High inner pressure condition	Maximum deformation	**0.03**	mm
	Maximum Von Mises Stress	**21**	MPa
	Maximum Equivalent Elastic Strain	**0.01**	%
Substrate material		**SUS304L**	

Table 1.2 Results Summary

2. Dimensional drawing

Please see the dimensional drawing of the PBSL chamber in Fig. 2.1 and Fig. 2.2. The analysis was done by using these simplified model

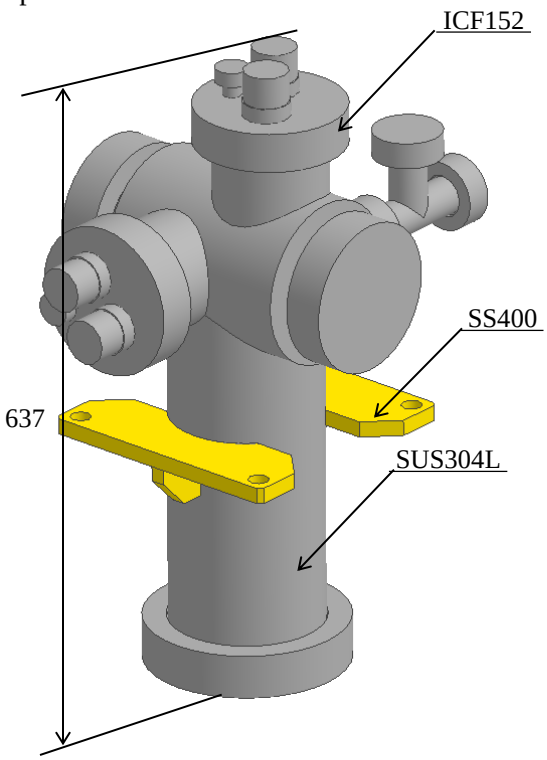

Fig. 2.1 Bird's eye view of chamber

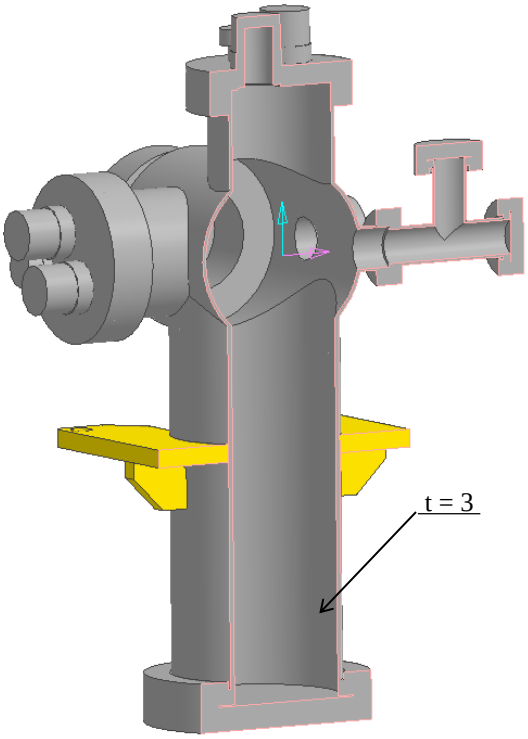

Fig. 2.2 Sectional view of chamber

3. Boundary conditions

3.1 For Static structural analysis

Fig. 3.1 shows the support points. All boundary conditions for static structural analysis is shown in Table 3.1.

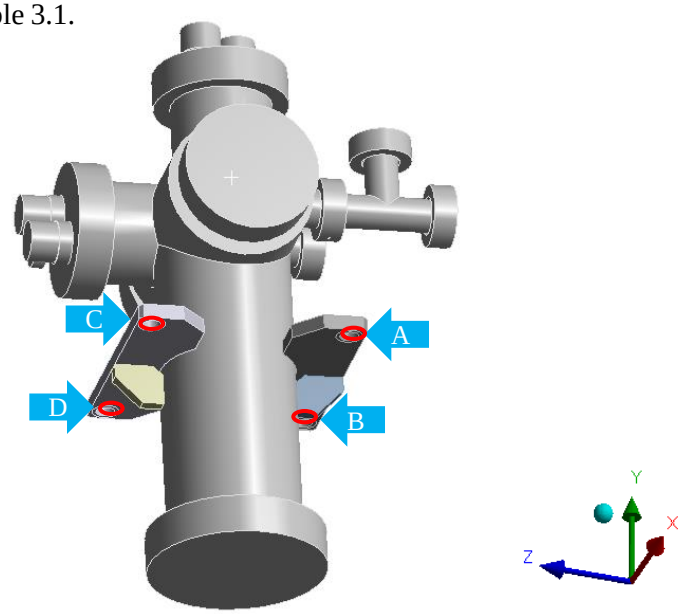

Fig. 3.2 Support Points

	Analysis Conditions
Surface A to D	**Fixed : X, Y, Z Axis**

Table 3.1 Support boundary conditions

3.2 Mesh model

Fig. 3.2 shows the mesh model used for analysis.

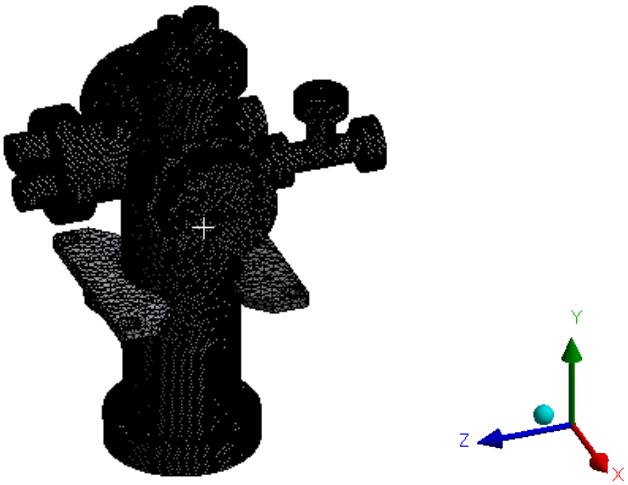

Fig. 3.2 Mesh model

3. Boundary conditions

3.3 Physical properties of materials

Table 3.3 shows the physical properties of materials used for analysis.

	Density	Young's modulus	Poisson's ratio
SUS304L	7930 kg/m³	1.93E+11 Pa	0.31
SS400	7900 kg/m³	2.06E+11 Pa	0.30

Table 3.4 Physical properties of materials

3.4 Pressure condition

The pressure conditions are as below.

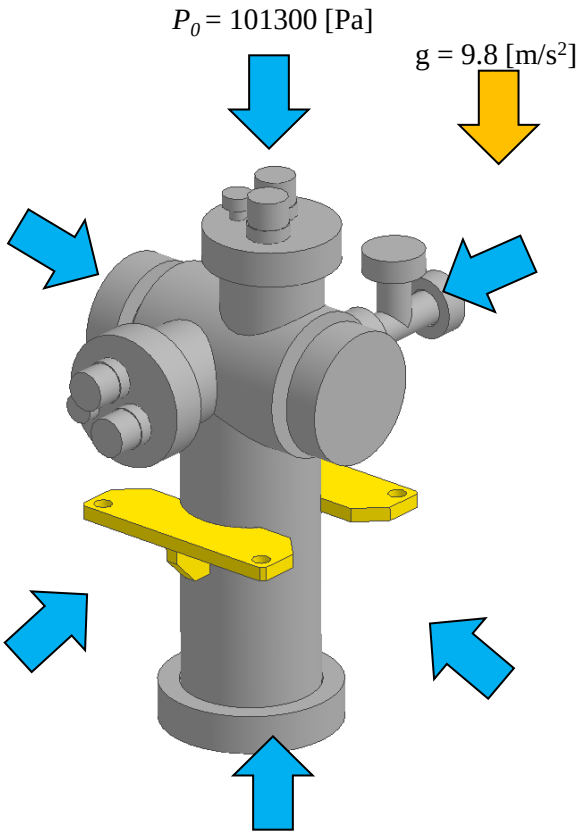

Fig. 3.5.1 Vacuum condition

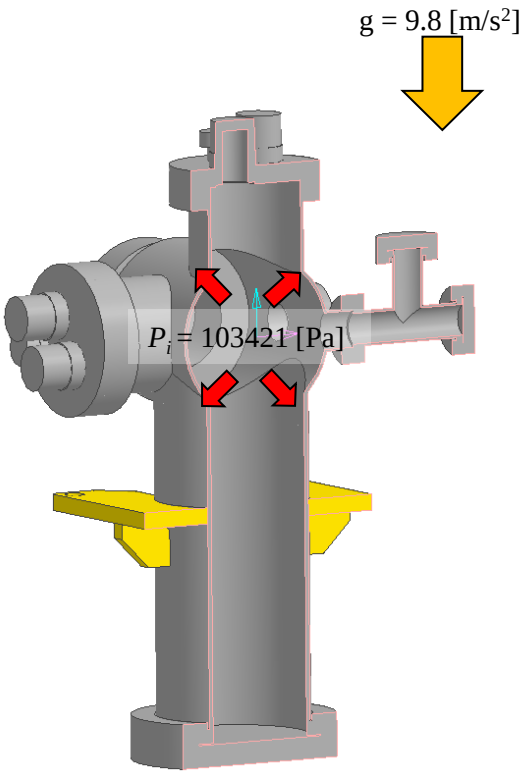

Fig. 3.5.2 High inner pressure condition

4. Calculation results

4.1 Deformation profile – Vacuum condition

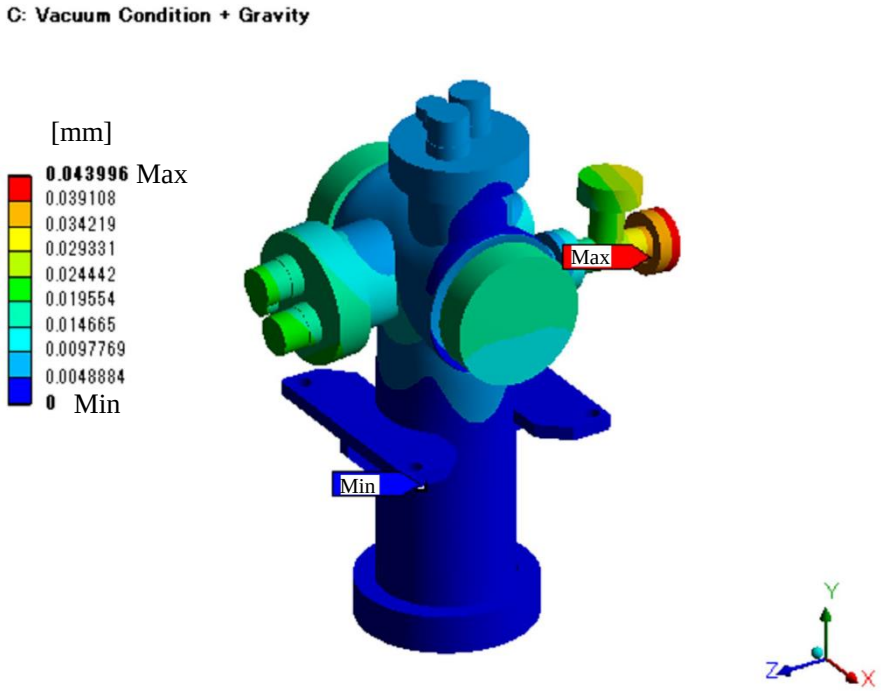

Fig. 4.1.1 Total deformation profile

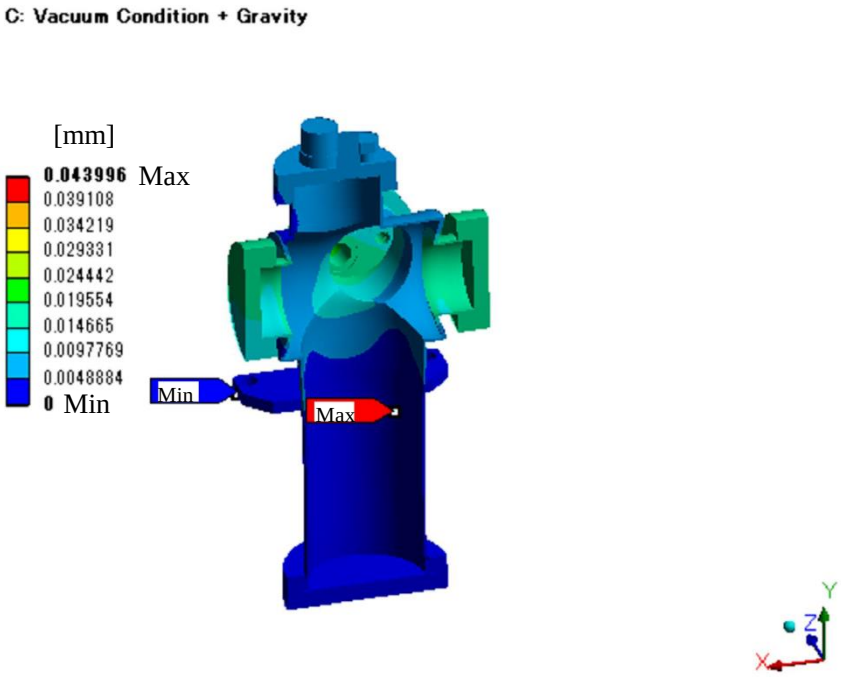

Fig. 4.1.2 Sectional view of total deformation profile

4.2 Stress profile – Vacuum condition

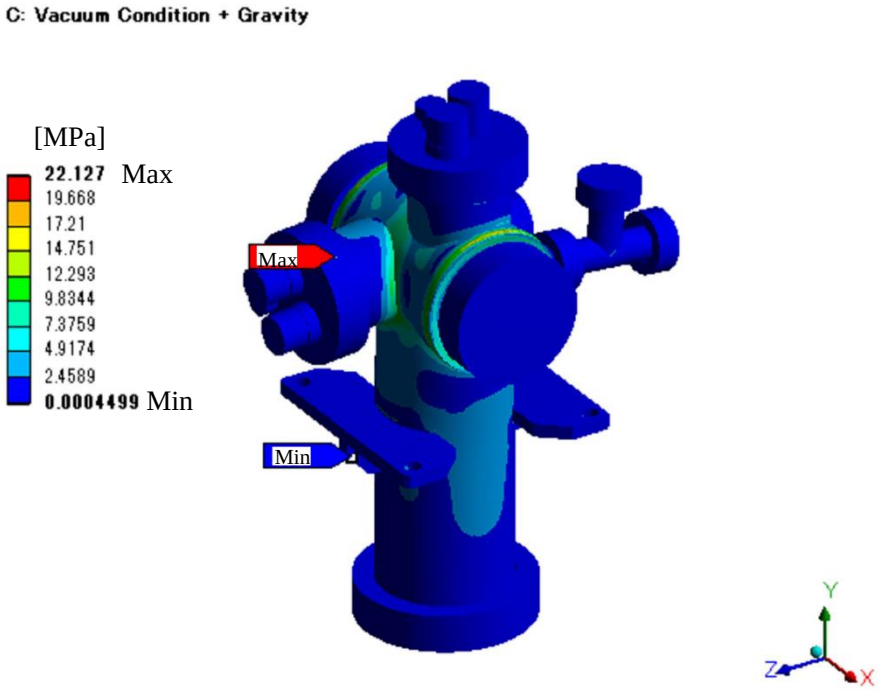

Fig. 4.2.1 Von Mises Stress profile

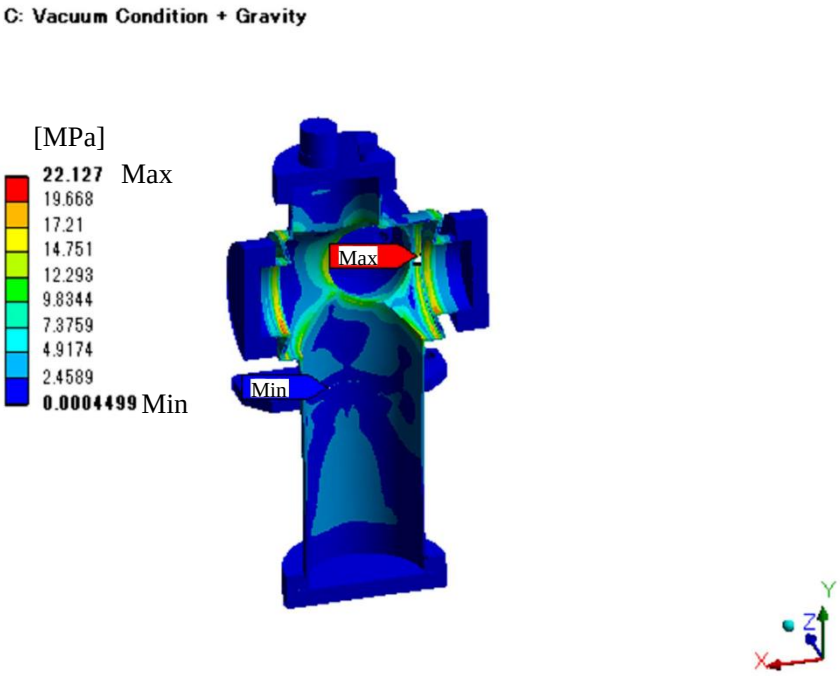

Fig. 4.2.2 Sectional view of Von Mises Stress profile

4.3 Elastic strain profile – Vacuum condition

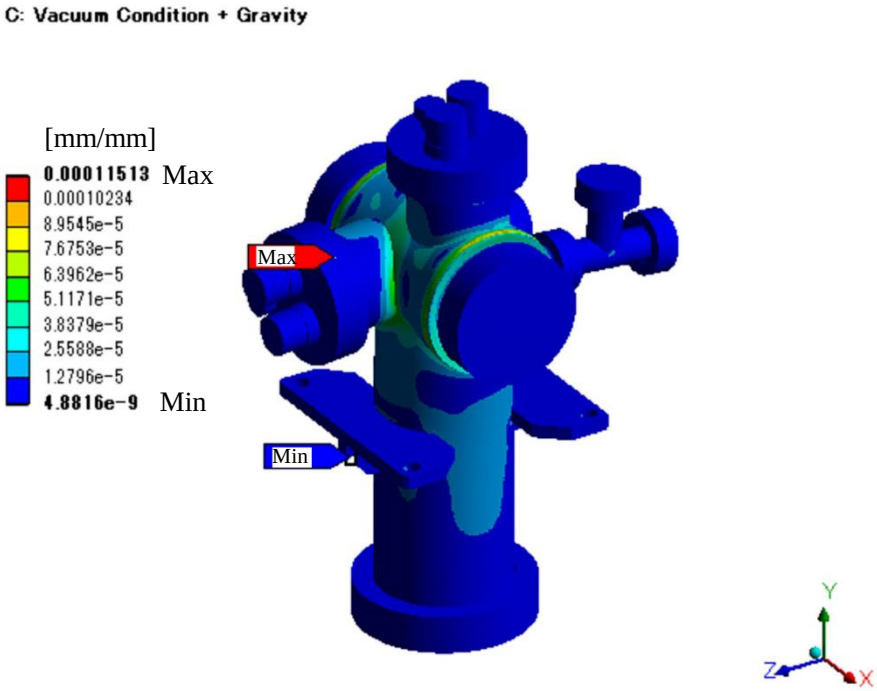

Fig. 4.3.1 Equivalent Elastic Strain profile

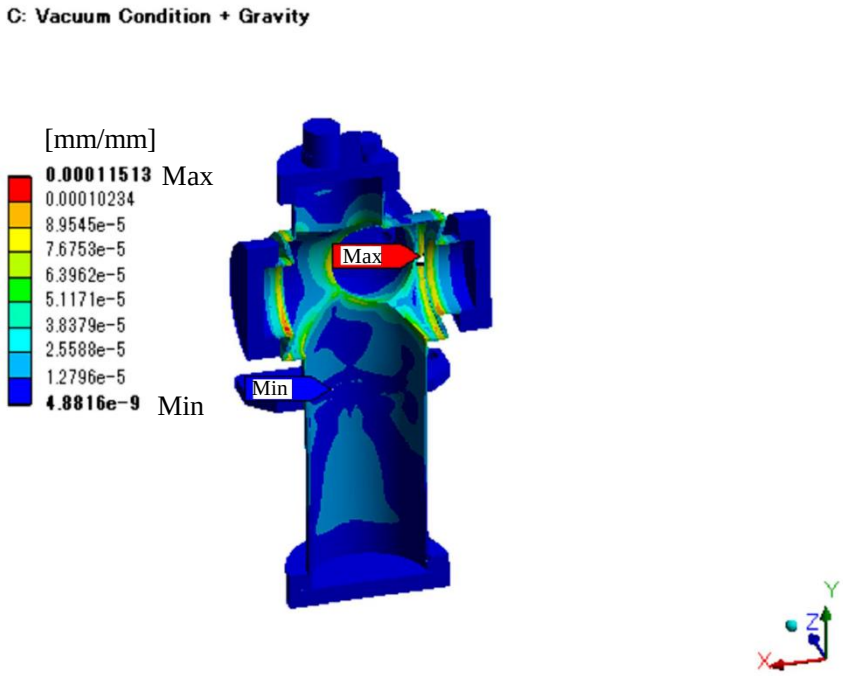

Fig. 4.3.2 Sectional view of Equivalent Elastic Strain profile

4. Calculation results

4.4 Deformation profile – High inner pressure condition

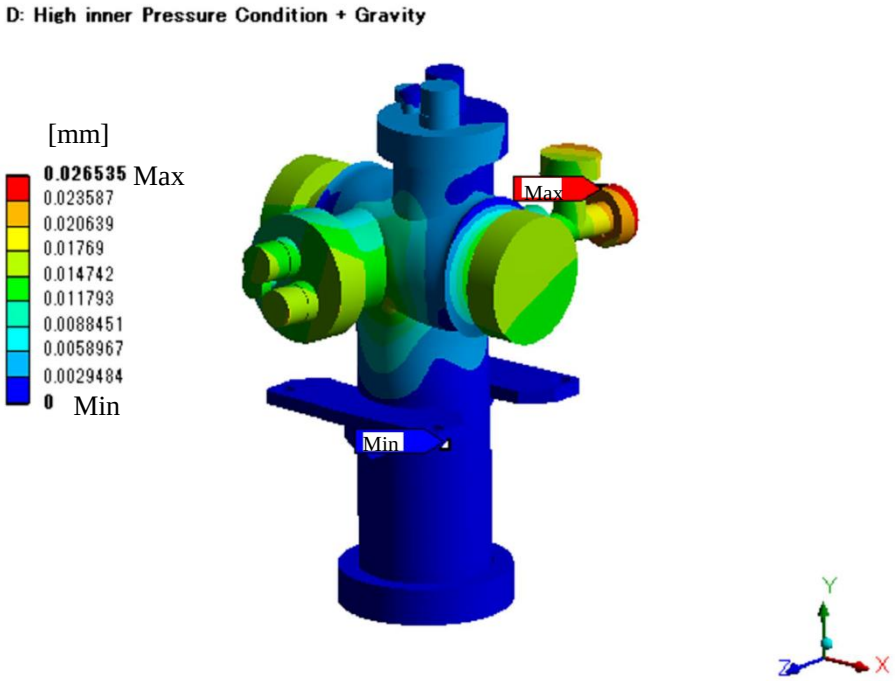

Fig. 4.4.1 Total deformation profile

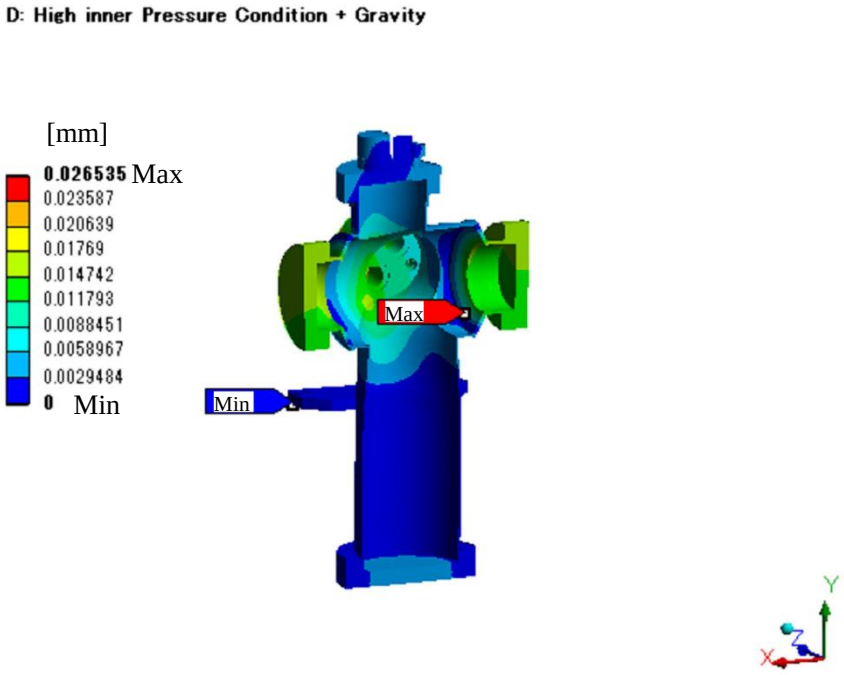

Fig. 4.4.2 Sectional view of total deformation profile

4.5 Stress profile – High inner pressure condition

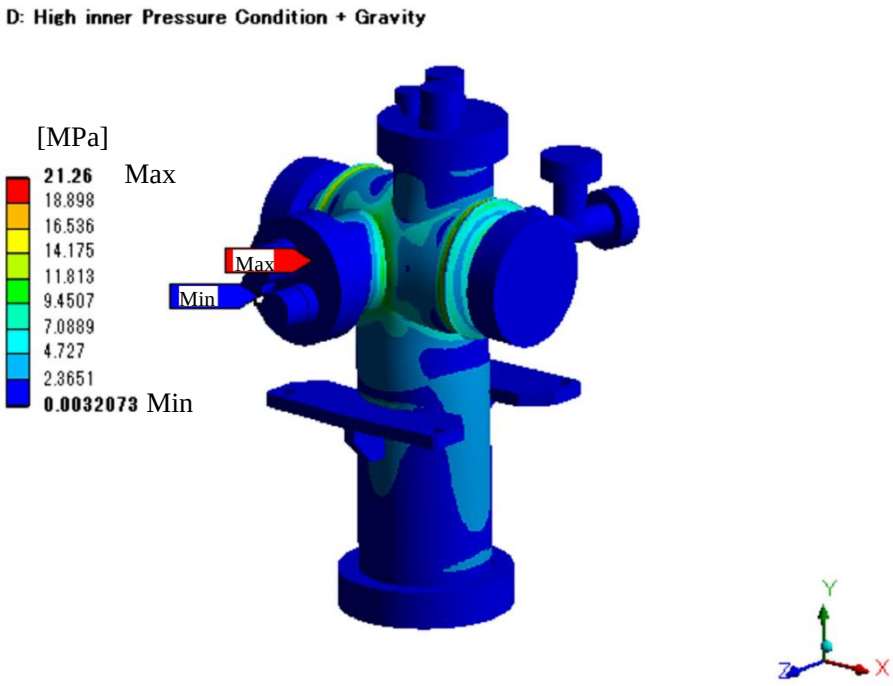

Fig. 4.5.1 Von Mises Stress profile

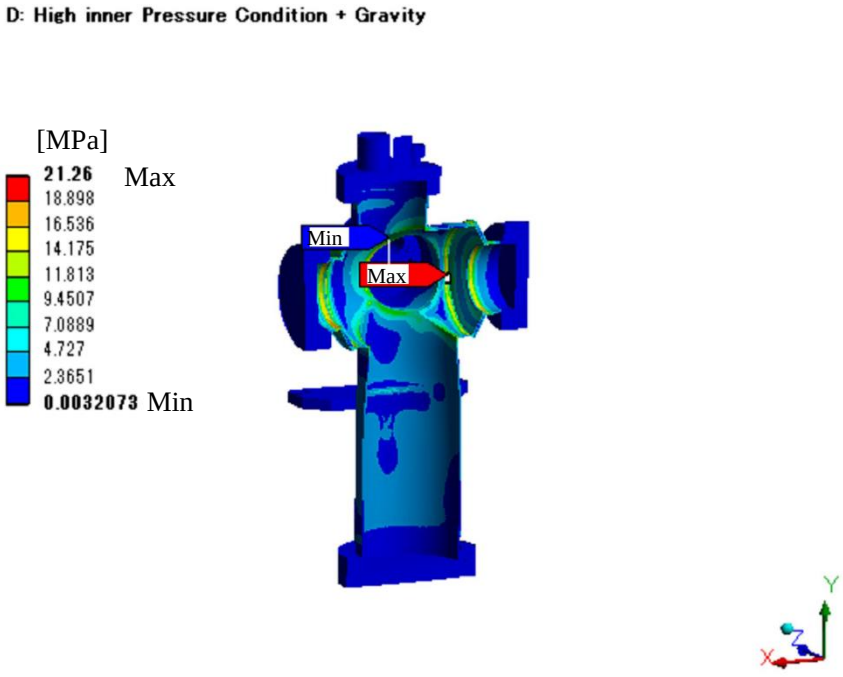

Fig. 4.5.2 Sectional view of Von Mises Stress profile

4.6 Elastic strain profile – High inner pressure

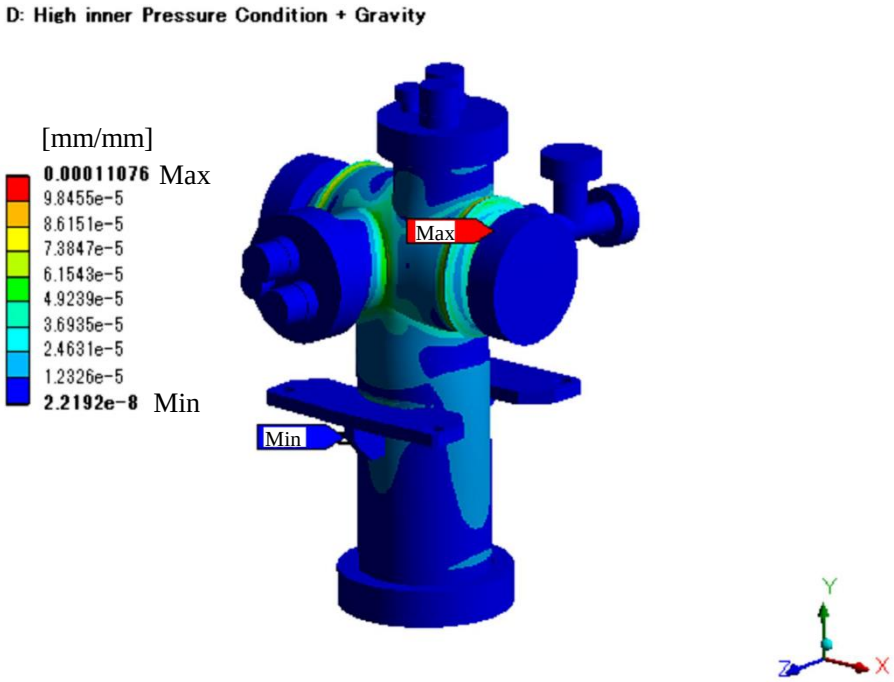

Fig. 4.6.1 Equivalent Elastic Strain profile

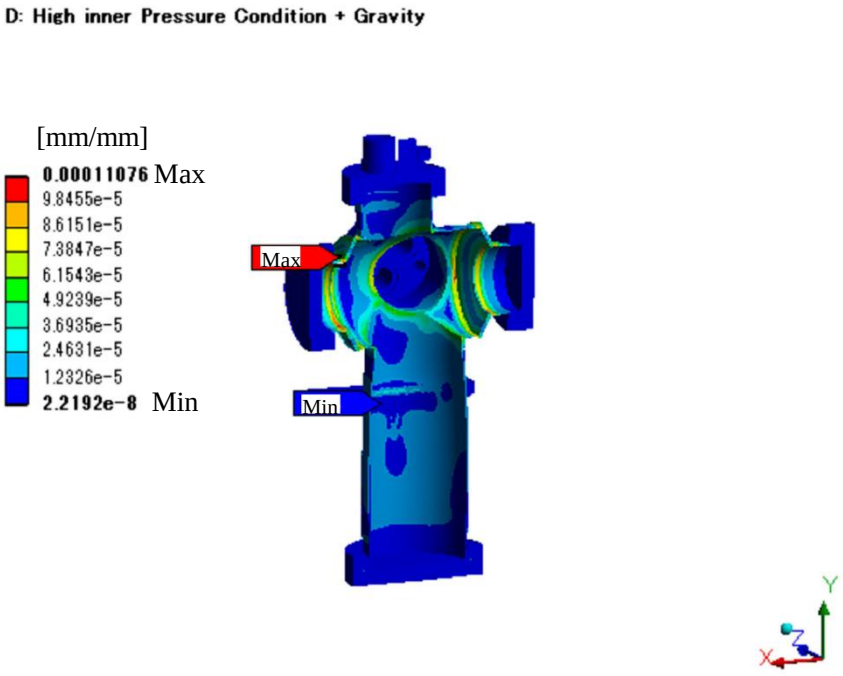

Fig. 4.6.2 Sectional view of Equivalent Elastic Strain profile

NSLS 2 FXI
Double Crystal Monochromator

Thermo-Structural analysis

- Reference temperature is adopted from minimum temperature of Si crystal.
- Structural analysis was done by using single Si crystal.
- Wire coil is inserted to enhance the convection coefficient.
- The edge of Si crystal is tapered.

TOYAMA Co., Ltd

Date : Nov. 24, 2015

Created by : Tsubota

1. Scope

We have performed thermo-structural analysis of the double crystal monochromator(DCM) of NSLS 2 FXI beamline to evaluate the temperature, deformation and slope error. In this report, we have analyzed thermal contact conductance(TCC) 7500 W/m^2・K condition. The analysis was done by using ANSYS 16.0 Mechanical.

The analysis conditions are listed in Table 1. These values are cited from the Technical Specification(NX-C-SPC-FXI-PDS-001). The more detail of the analysis conditions are written in Page 3.

Table 2 shows the analysis results. All these results clear the design criteria(LT-C-XFD-SPC-COM-001).

	Analysis conditions	
Incident photon energy	**4**	keV
Total Absorbed Power	**412**	W
Foot print	**H × V = 7.2 mm × 14.57 mm**	
Thermal contact conductance (Si – OFHC)	**7500**	W/m^2・K
Reference temperature	**85.7**	K

Table 1. Analysis conditions

	Analysis resutls	
Maximum Temperature	**110.7**	K
Slope Error in tangential direction (⊿P-P)	**10**	μrad
Slope Error in sagittal direction (⊿P-P)	**8.2**	μrad
Substrate material	**Si crystal**	

Table 2. Results Summary

2. Dimensional drawing

Please see the dimensional drawing of the first crystal of DCM in Fig. 2.1, Fig.2.2 and Fig. 2.3. The analysis was done by using these simplified model

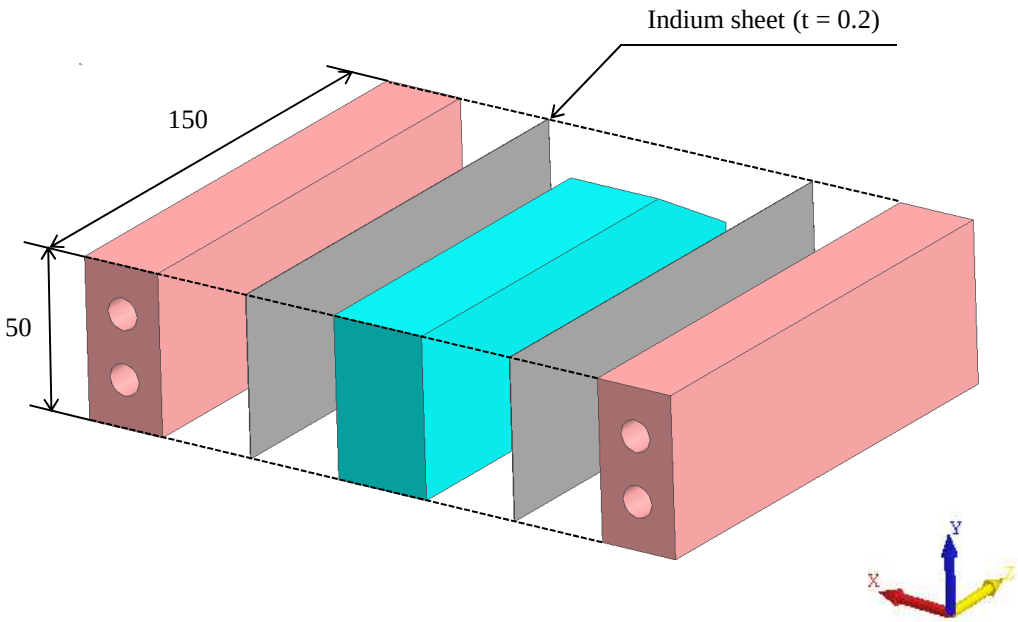

Fig. 2.1 Exploded view

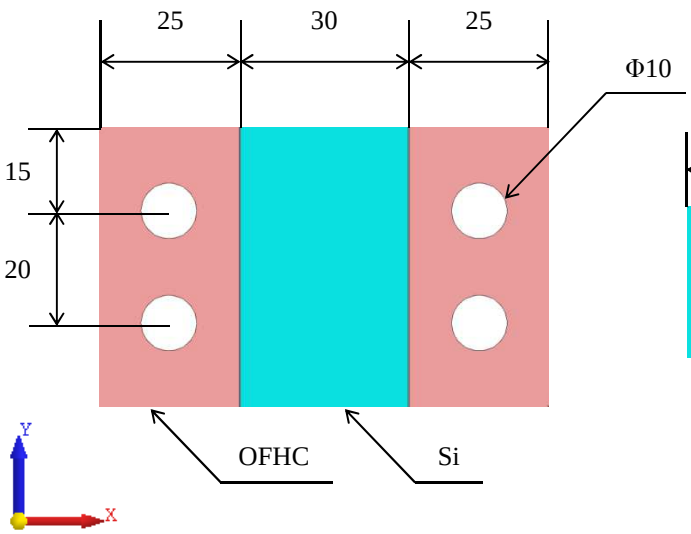

Fig. 2.2 Front view

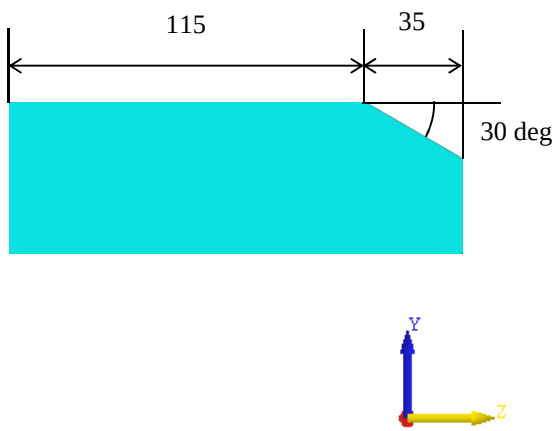

Fig. 2.3 Crystal configuration (side view)

3. Boundary conditions

3.1 For thermal analysis

3.1.1 Analysis conditions

The green area in Fig. 3.1.1.1 shows the heat input area. Detail of the heat input power map and penetration depth are shown in page 4. The yellow surface in Fig. 3.1.1.2 shows the convection surface. Table 3.1.1 shows the boundary conditions for thermal analysis. We assumed the thermal contact conductance is enhanced by inserting the indium sheet. And we assumed the convection coefficient is enhanced by inserting the wire coil.

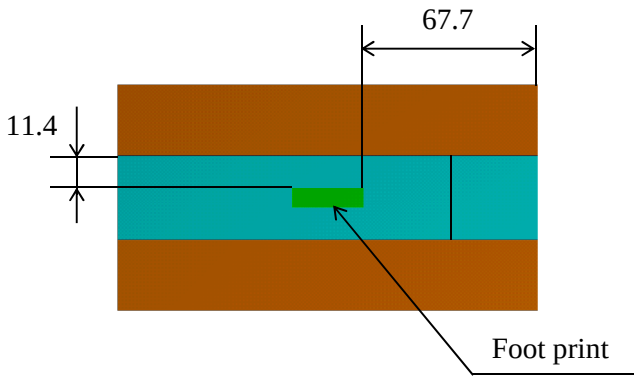

Fig. 3.1.1.1 Heat input area (Top view)

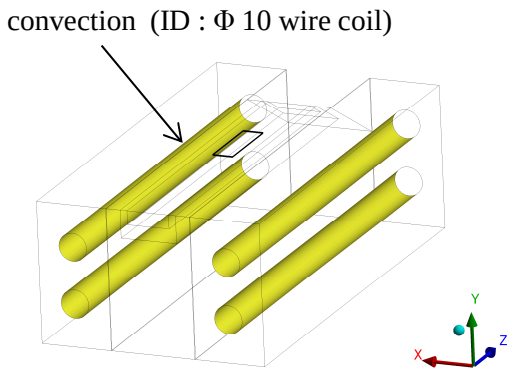

Fig. 3.1.1.2 convection surface

	Analysis Conditions	
Liquid nitrogen temperature	**80**	K
Total absorbed power	**412**	W
Maximum heat flux	**3.86**	W/mm^2
Distance from the source	**34.3**	m
Inclined angle	**29.625**	degrees
Foot print	**H × V = 7.2 mm × 14.57 mm**	
Convection coefficient	**9000**	W/m^2・K
Pipe inner diameter	**10**	mm
Flow rate	**9.4**	L/min
Flow velocity	**2.0**	m/s
Thermal contact conductance between Si and OFHC	**7500**	W/m^2・K

Table 3.1.1 Analysis Conditions

3.1.2 Heat input calculation for thermal analysis

Fig. 3.1.2.1 shows the schematic diagram of the synchrotron light penetration into the Si crystal. Table 3.1.2 shows the absorbed power list used for analysis. These calculation was done by using the SPECTRA software*. Fig. 3.1.2.2 shows the power map at the penetration depth 0-0.05 mm.

* T. Tanaka and H. Kitamura, J. Synchrotron Radiation 8 (2001) 1221.
Email : ztanaka@spring8.or.jp
URL : http://radiant.harima.riken.go.jp/spectra/index.html

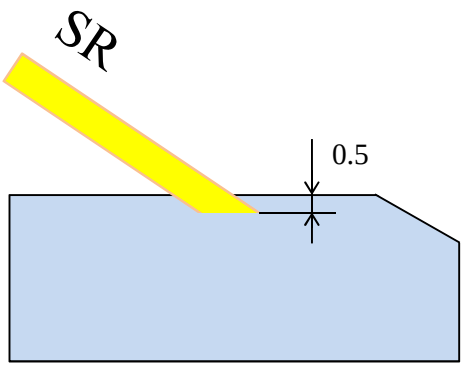

Fig. 3.1.2.1 Schematic diagram

Penetration depth (mm)	Absorbed power (W)
0 - 0.05	**397.722**
0.05 - 0.10	**12.651**
0.10 - 0.15	**1.130**
0.15 - 0.20	**0.289**
0.20 - 0.25	**0.108**
0.25 - 0.30	**0.049**
0.30 - 0.35	**0.025**
0.35 - 0.40	**0.014**
0.40 - 0.45	**0.008**
0.45 - 0.50	**0.004**

Table 3.1.2 Absorbed Power

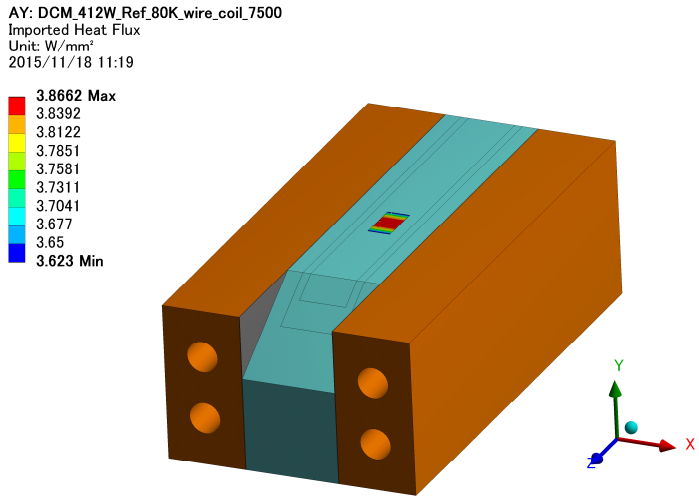

Fig. 3.1.2.2 Power map at penetration depth 0-0.05 mm

3.2 For Static structural analysis

Fig. 3.2 shows the support boundary conditions. The analysis was done by using single Si crystal. All boundary conditions for static structural analysis is shown in Table 3.2.

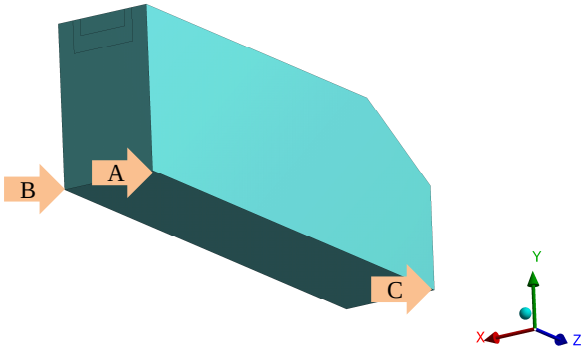

Fig. 3.2 Support points

	Analysis Conditions	
Point A	**Fixed : X, Y, Z Axis**	
Point B	**Fixed : Y, Z Axis**	**Free : X Axis**
Point C	**Fixed : Y Axis**	**Free : X, Z Axis**
Reference temperature	**85.7 K**	

* The reference temperature was defined from the minimum temperature of Si crystal.

Table 3.2 Support boundary conditions

3.3 Mesh model

Fig. 3.3 shows the mesh model used for analysis.

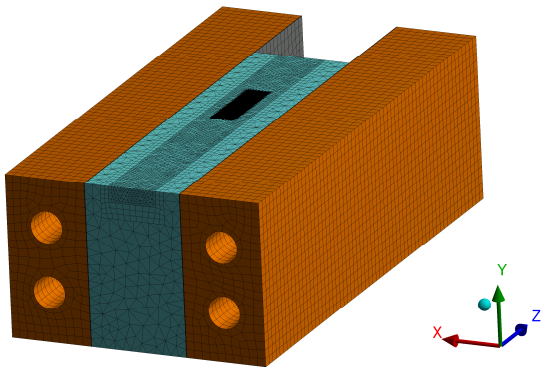

Fig. 3.3 Mesh model

3.4 Physical properties of materials

Table 3.4 shows the physical properties of materials used for analysis.

	Density	Young's modulus	Poisson's ratio	Thermal Expansion	Thermal Conductivity
Si	2330 kg/m³	1.65E+11 Pa	0.26	Fig. 3.4.1	Fig. 3.4.1
OFHC	8940 kg/m³	1.18E+11 Pa	0.34	Fig. 3.4.2	Fig. 3.4.2
Indium	7310 kg/m³	1.08E+10 Pa	0.30	2.54E-05 /K	*

* The thermal conductivity is adjusted to become each model thermal contact conductance.

Table 3.4 Physical properties of materials

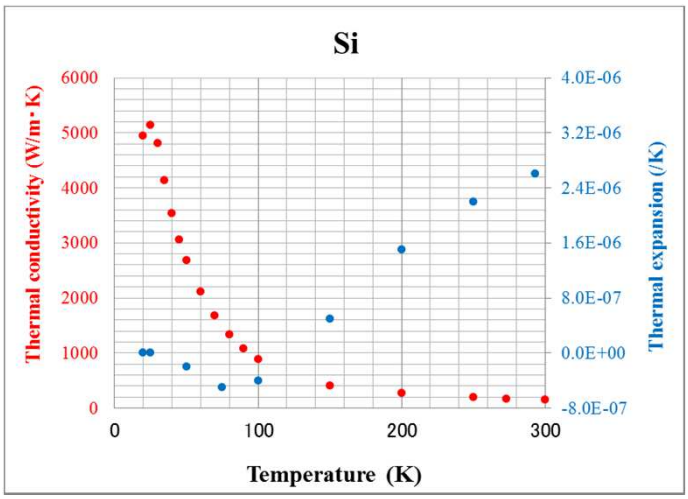

Fig 3.4.1 Thermal conductivity and thermal expansion

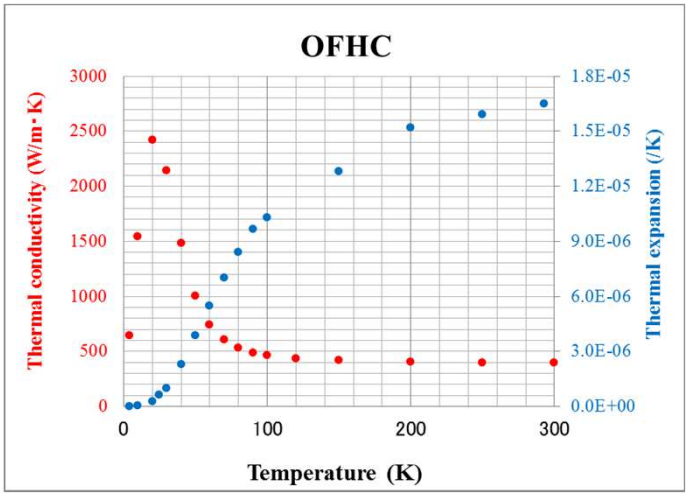

Fig 3.4.2 Thermal conductivity and thermal expansion

3.5 Schematic for the calculation lines

The Red lines in Fig. 3.5 show the calculation lines of surface slope(LINE ①, ②). The LINE ① is tangential direction, and the LINE ② is sagittal direction.

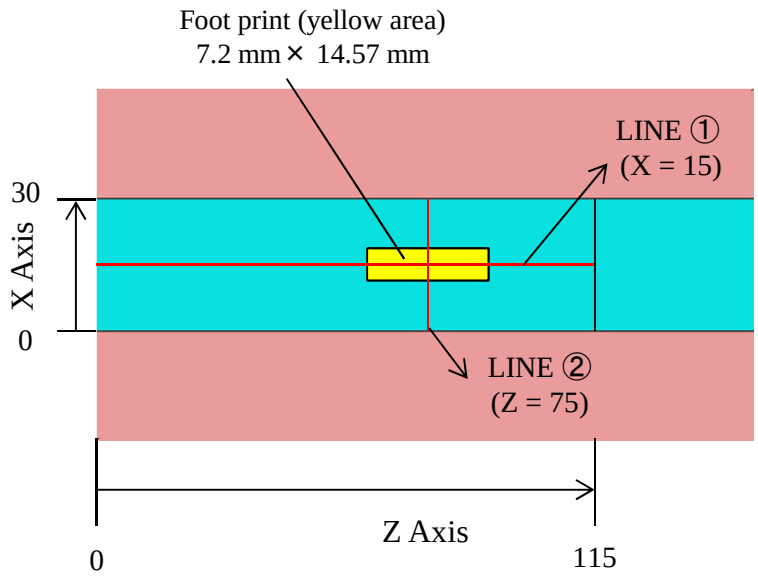

Fig. 3.5 Schematic for the calculation lines of surface slope

4. Calculation results (TCC_7500 W/m^2・K)

4.1 Temperature profile

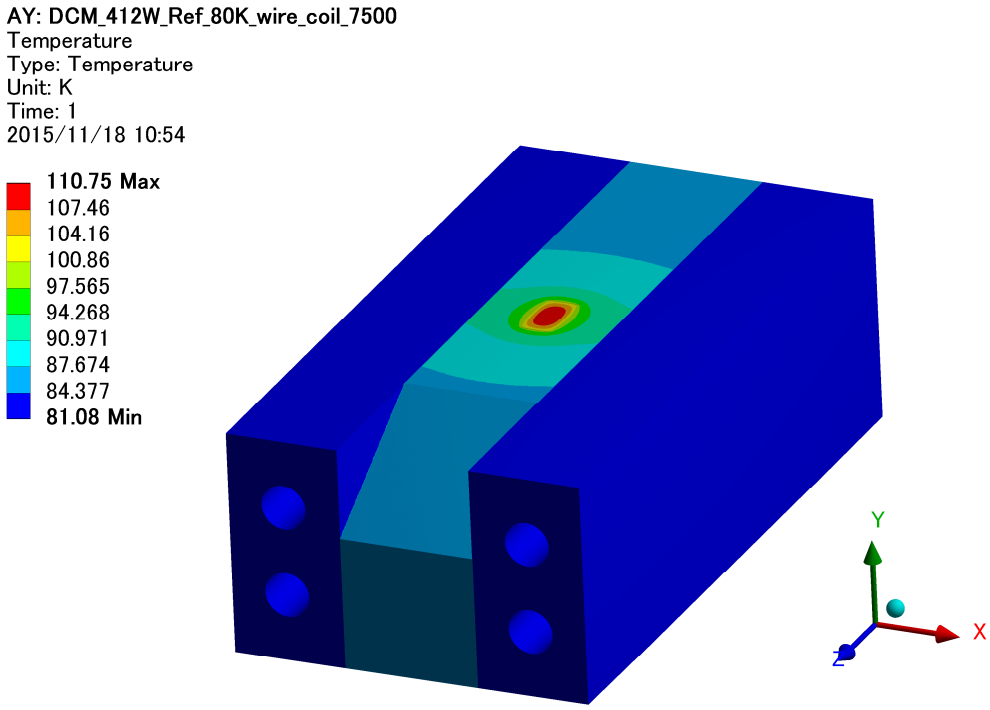

Fig. 4.1.1 Temperature profile

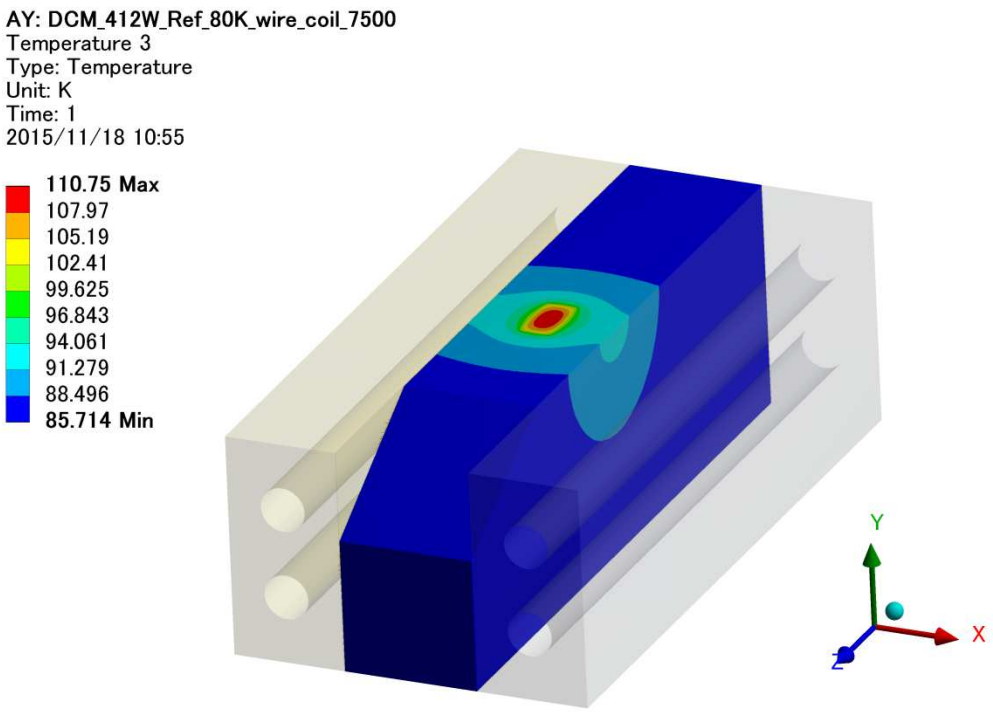

Fig. 4.1.2 Sectional view of temperature profile

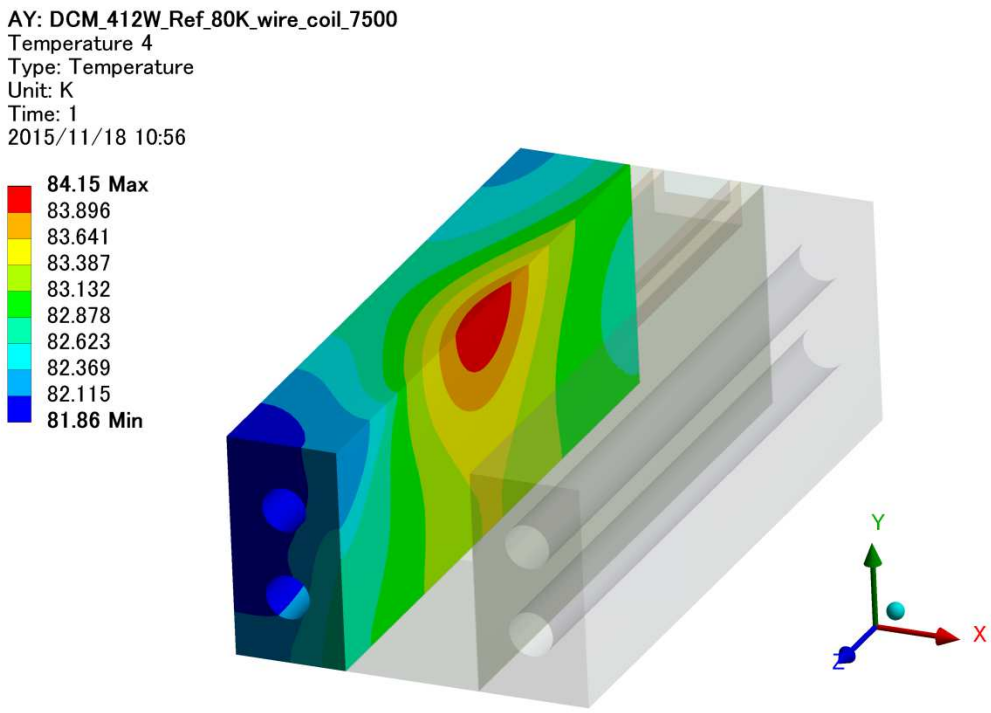

Fig. 4.1.3 Temperature profile of the OFHC

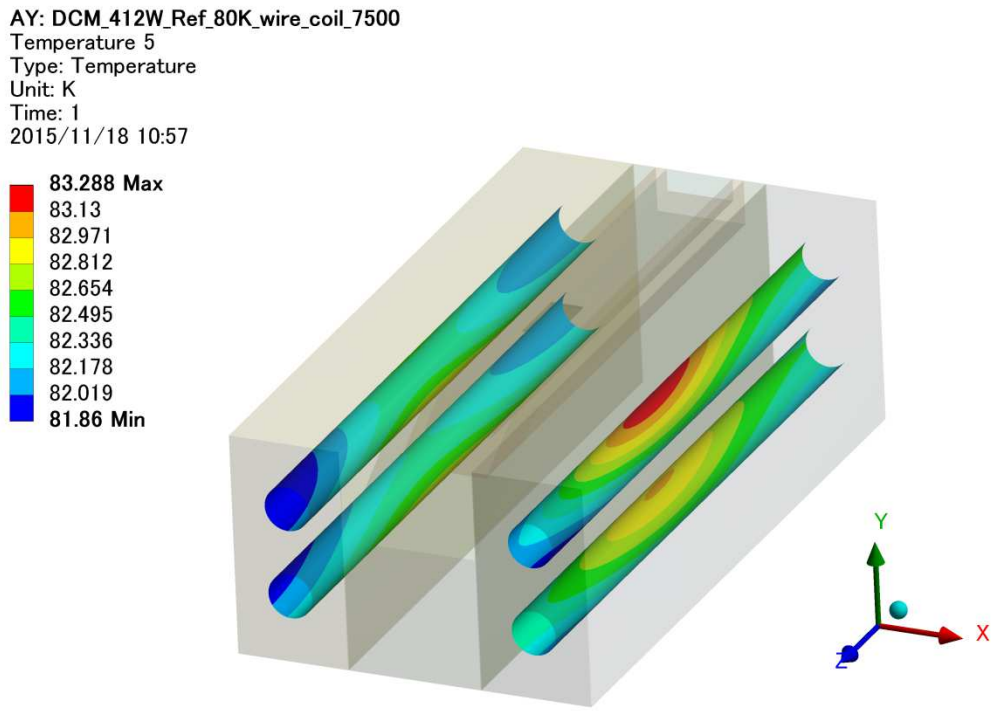

Fig. 4.1.4 Temperature profile of the cooling pipe

4.2 Deformation profile

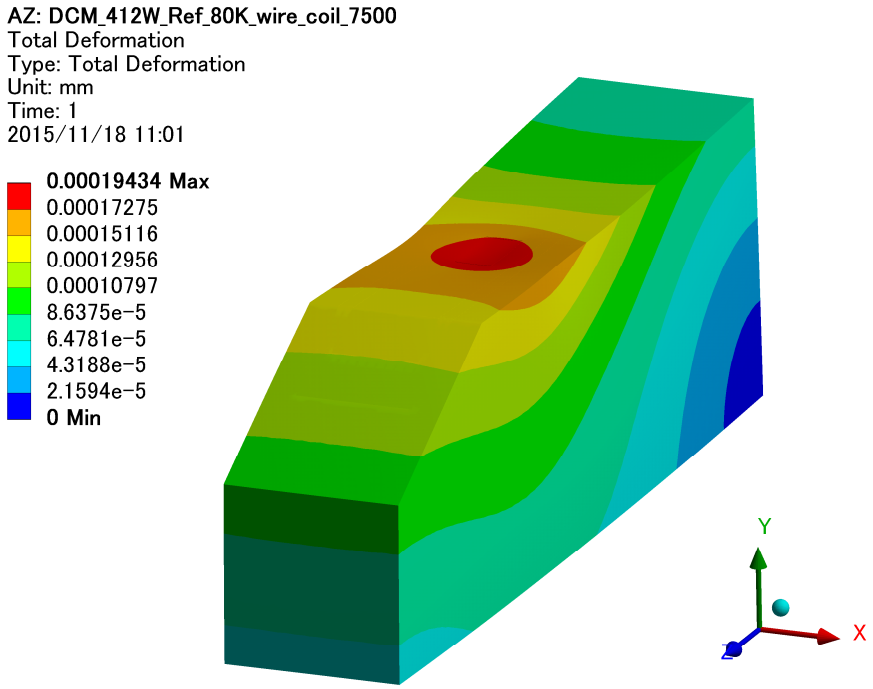

Fig. 4.2.1 Total Deformation

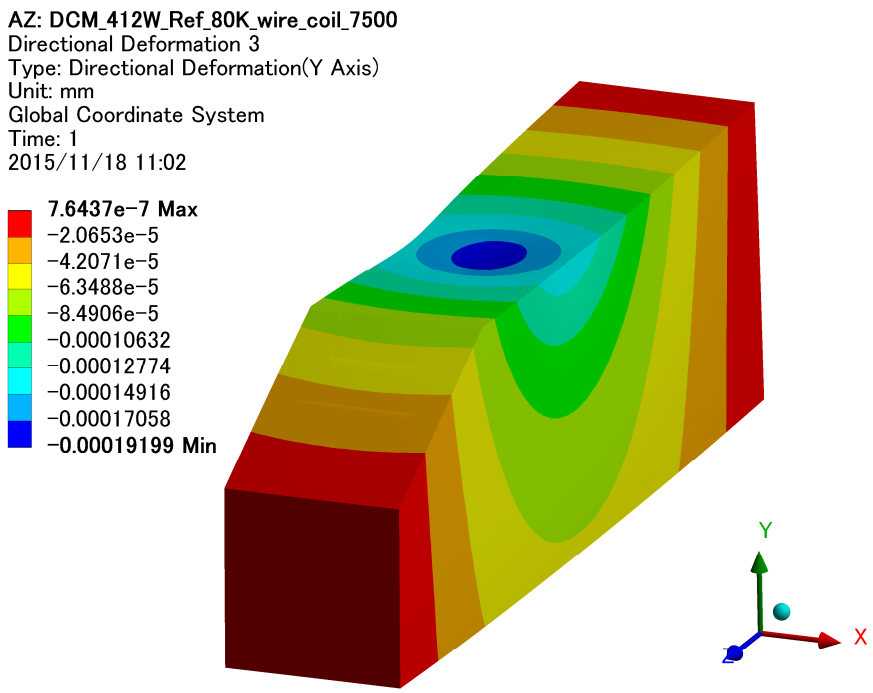

Fig. 4.2.2 Directional deformation (Y Axis)

4.3 Directional deformation along the tangential axis (LINE ①)

Fig. 4.3.1 shows the directional deformation of LINE ①.
Fig. 4.3.2 shows the Y axis directional deformation shape extracted from the line ①. Fig. 4.3.3 shows slope, which is obtained by differentiating the deformation result.

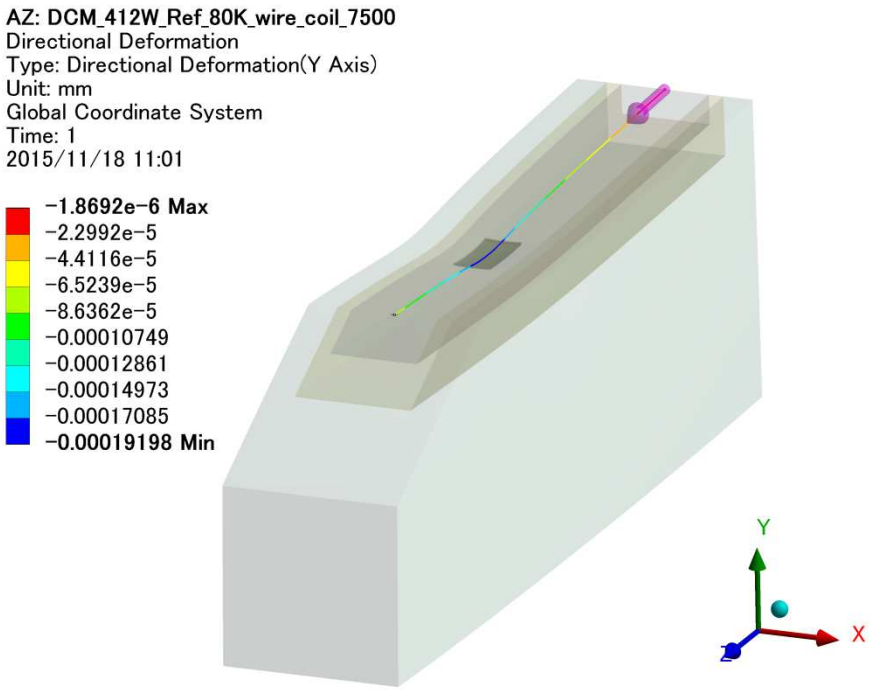

Fig. 4.3.1 Directional Deformation of LINE ① (Y Axis)

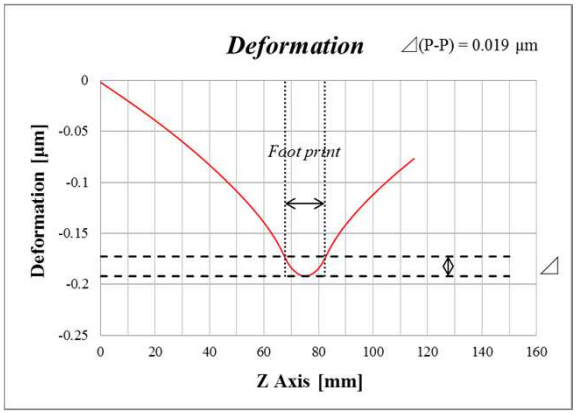

Fig. 4.3.2 Deformation of LINE ①

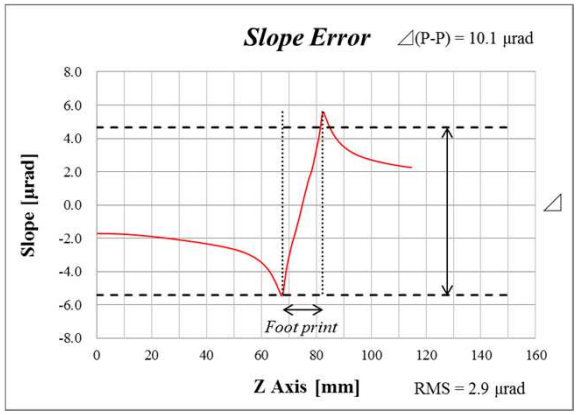

Fig. 4.3.3 Slope of LINE ①

4.4 Directional deformation along the sagittal axis (LINE ②)

Fig. 4.4.1 shows the directional deformation of LINE ②.
Fig. 4.4.2 shows the deformation shape of LINE ②. Fig. 4.4.3 shows slope, which is obtained by differentiating the deformation result.

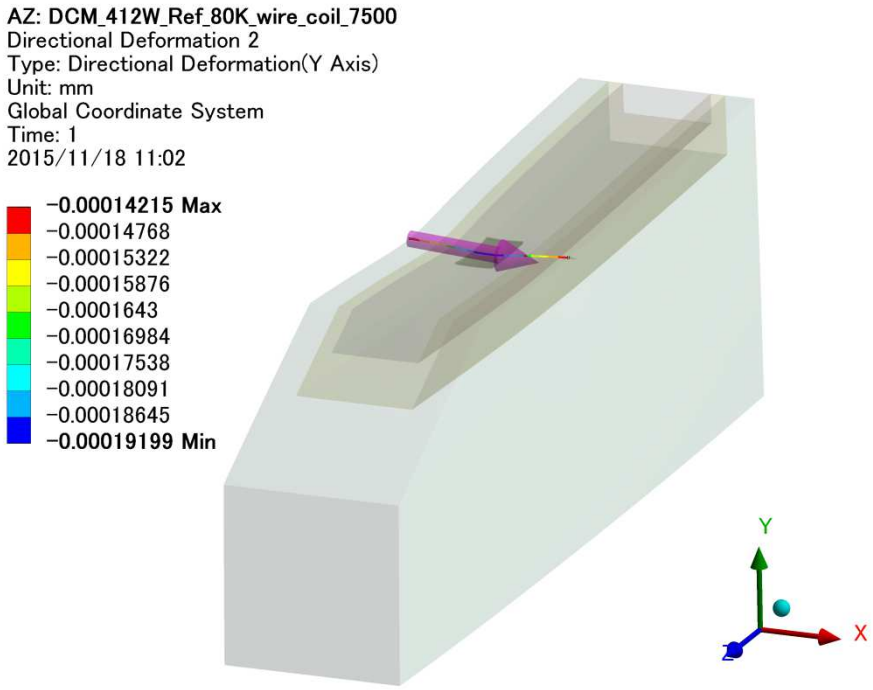

Fig. 4.4.1 Directional Deformation of LINE ② (Y Axis)

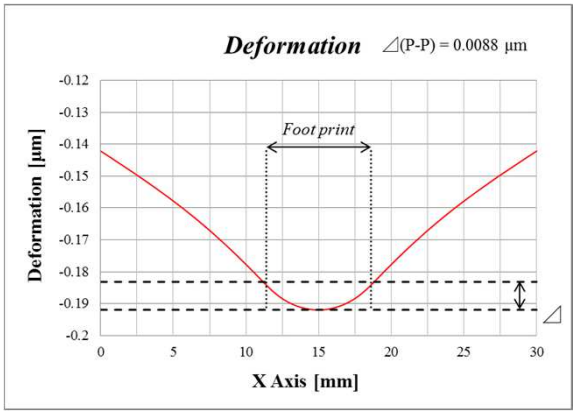

Fig. 4.4.2 Deformation of LINE ②

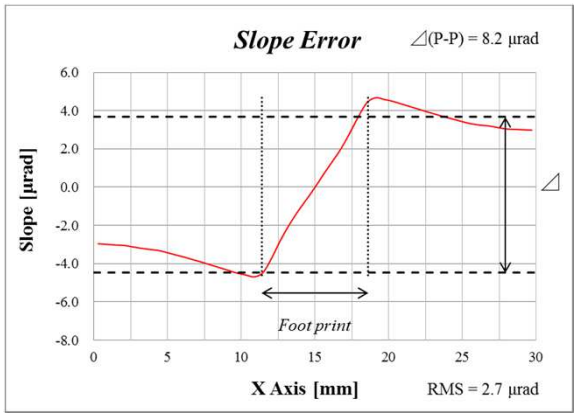

Fig. 4.4.3 Slope of LINE ②

NSLS 2 FXI
Double Crystal Monochromator

Thermo-Structural analysis

- Reference temperature is adopted from minimum temperature of Si crystal.
- Structural analysis was done by using single Si crystal.
- Wire coil is inserted to enhance the convection coefficient.
- The edge of Si crystal is tapered.

TOYAMA Co., Ltd

Date : Oct. 23, 2015

Created by : Tsubota

1. Scope

We have performed thermo-structural analysis of the double crystal monochromator(DCM) of NSLS 2 FXI beamline to evaluate the temperature, deformation and slope error. In this report, we have analyzed the two model, thermal contact conductance(TCC) 15000 W/m^2・K and 7500 W/m^2・K. The calculation was done by using ANSYS 16.0 Mechanical.

The analysis conditions are listed in Table 1. These values are cited from the Technical Specification(NX-C-SPC-FXI-PDS-001). The more detail of the analysis conditions are written in Page 3.

Table 2 shows the analysis results. All these results clear the design criteria(LT-C-XFD-SPC-COM-001).

	Analysis conditions			
Incident photon energy	**7**	keV		
Total Absorbed Power	**745**	W		
Foot print	**H × V = 7.2 mm × 25.5 mm**			
	model 1		model 2	
Thermal contact conductance (Si – OFHC)	**15000**	W/m^2・K	**7500**	W/m^2・K
Reference temperature	**87.1**	K	**90.1**	K

Table 1. Analysis conditions

	model 1		model 2	
Maximum Temperature	**122.7**	K	**128.9**	K
Slope Error in tangential direction (RMS)	**3.3**	μrad	**2.6**	μrad
Slope Error in sagittal direction (RMS)	**1.94**	μrad	**1.02**	μrad
Substrate material	**Si crystal**			

Table 2. Results Summary

2. Dimensional drawing

Please see the dimensional drawing of the first crystal of DCM in Fig. 2.1, Fig.2.2 and Fig. 2.3. The analysis was done by using these simplified model

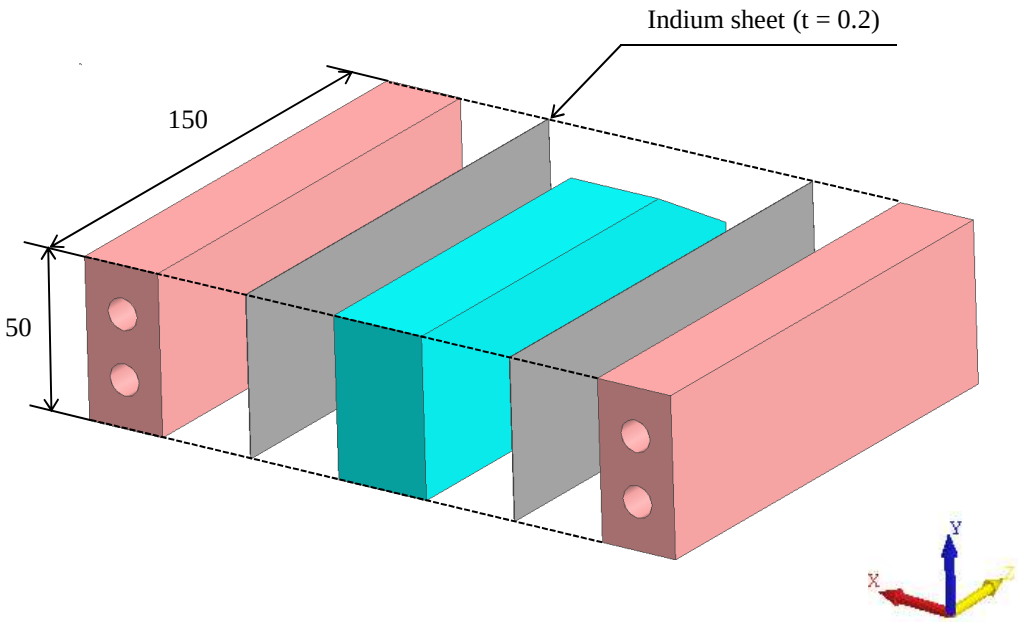

Fig. 2.1 Exploded view

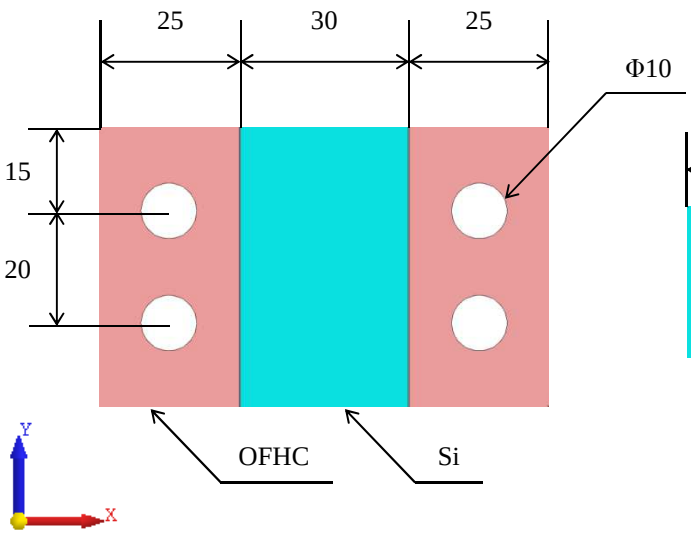

Fig. 2.2 Front view

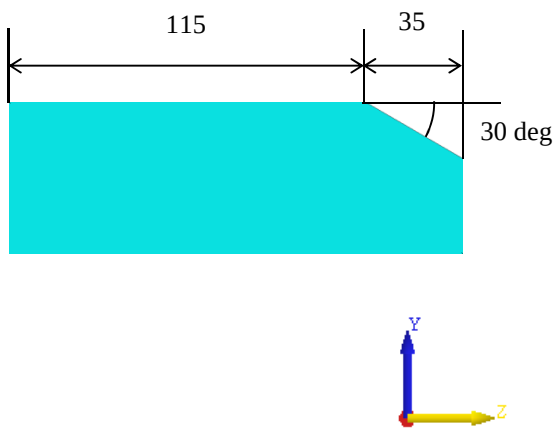

Fig. 2.3 Crystal configuration (side view)

3. Boundary conditions

3.1 For thermal analysis

3.1.1 Analysis conditions

The green area in Fig. 3.1.1.1 shows the heat input area. Detail of the heat input power map and penetration depth are shown in page 4. The yellow surface in Fig. 3.1.1.2 shows the convection surface. Table 3.1.1 show the boundary conditions for thermal analysis. We assumed the thermal contact conductance is enhanced by inserting the indium sheet. And we assumed the convection coefficient is enhanced by inserting the wire coil.

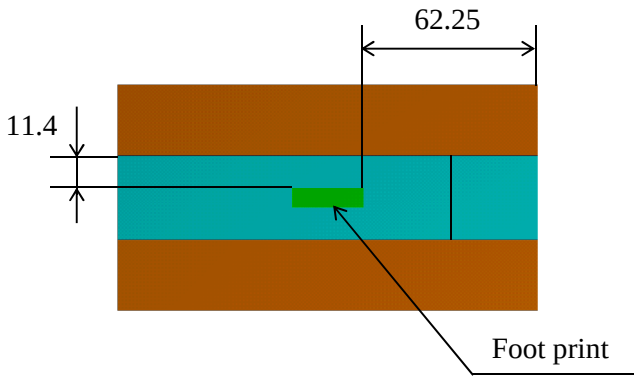

Fig. 3.1.1.1 Heat input area (Top view)

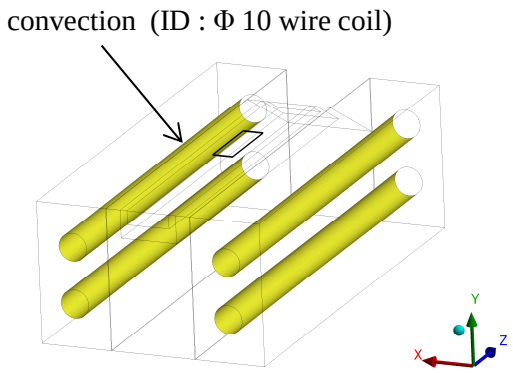

Fig. 3.1.1.2 convection surface

	Analysis Conditions	
Liquid nitrogen temperature	**80**	K
Total absorbed power	**745**	W
Maximum heat flux	**3.41**	W/mm^2
Distance from the source	**34.3**	m
Inclined angle	**16.4**	degrees
Foot print	**H × V = 7.2 mm × 25.5 mm**	
Convection coefficient	**9000**	W/m^2・K
Pipe inner diameter	**10**	mm
Flow rate	**9.4**	L/min
Flow velocity	**2.0**	m/s
Thermal contact conductance between Si and OFHC	model 1 **15000** W/m^2・K	model 2 **7500** W/m^2・K

Table 3.1.1 Analysis Conditions

3.1.2 Heat input calculation for thermal analysis

Fig. 3.1.2.1 shows the schematic diagram of the synchrotron light penetration into the Si crystal. Table 3.1.2 shows the absorbed power list used for analysis. These calculation was done by using the SPECTRA software*. Fig. 3.1.2.2 shows the power map at the penetration depth 0-0.05 mm.

* T. Tanaka and H. Kitamura, J. Synchrotron Radiation 8 (2001) 1221.
Email : ztanaka@spring8.or.jp
URL : http://radiant.harima.riken.go.jp/spectra/index.html

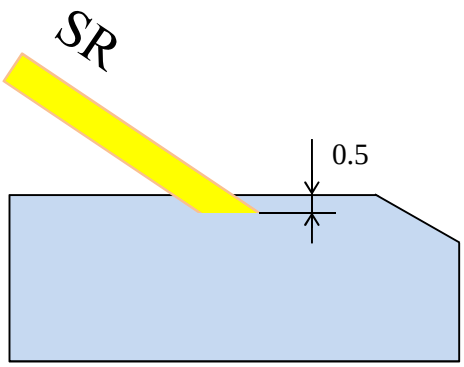

Fig. 3.1.2.1 Schematic diagram

Penetration depth (mm)	Absorbed power (W)
0 - 0.05	**588.29**
0.05 - 0.10	**113.30**
0.10 - 0.15	**31.81**
0.15 - 0.20	**8.24**
0.20 - 0.25	**2.17**
0.25 - 0.30	**0.68**
0.30 - 0.35	**0.28**
0.35 - 0.40	**0.14**
0.40 - 0.45	**0.07**
0.45 - 0.50	**0.04**

Table 3.1.2 Absorbed Power

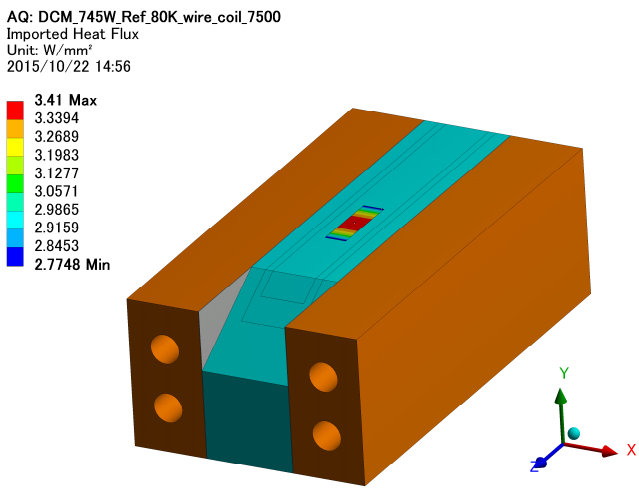

Fig. 3.1.2.2 Power map at penetration depth 0-0.05 mm

3.2 For Static structural analysis

Fig. 3.2 shows the support boundary conditions. The analysis was done by using single Si crystal. All boundary conditions for static structural analysis is shown in Table 3.2.

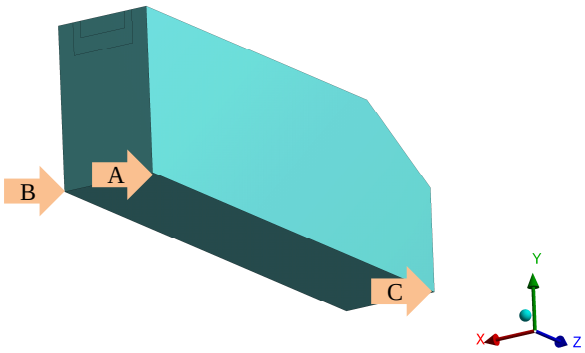

Fig. 3.2 Support points

	Analysis Conditions	
Point A	**Fixed : X, Y, Z Axis**	
Point B	**Fixed : Y, Z Axis**	**Free : X Axis**
Point C	**Fixed : Y Axis**	**Free : X, Z Axis**
	model 1	model 2
Reference temperature	**87.1 K**	**90.1 K**

* The reference temperature was defined from the minimum temperature of Si crystal.

Table 3.2 Support boundary conditions

3.3 Mesh model

Fig. 3.3 shows the mesh model used for analysis.

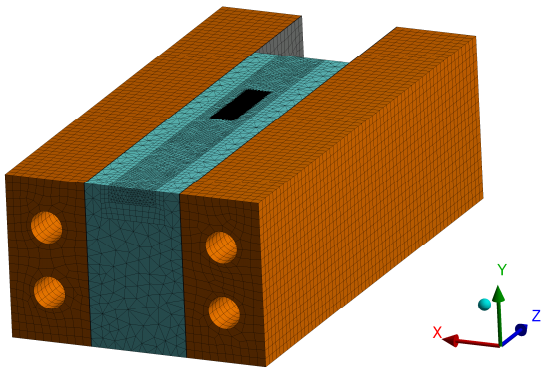

Fig. 3.3 Mesh model

3.4 Physical properties of materials

Table 3.4 shows the physical properties of materials used for analysis.

	Density	Young's modulus	Poisson's ratio	Thermal Expansion	Thermal Conductivity
Si	2330 kg/m³	1.65E+11 Pa	0.26	Fig. 3.4.1	Fig. 3.4.1
OFHC	8940 kg/m³	1.18E+11 Pa	0.34	Fig. 3.4.2	Fig. 3.4.2
Indium	7310 kg/m³	1.08E+10 Pa	0.30	2.54E-05 /K	*

* The thermal conductivity is adjusted to become each model thermal contact conductance.

Table 3.4 Physical properties of materials

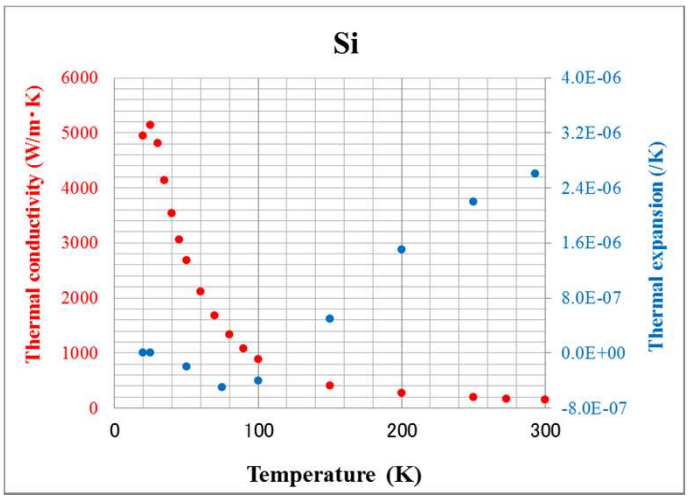

Fig 3.4.1 Thermal conductivity and thermal expansion

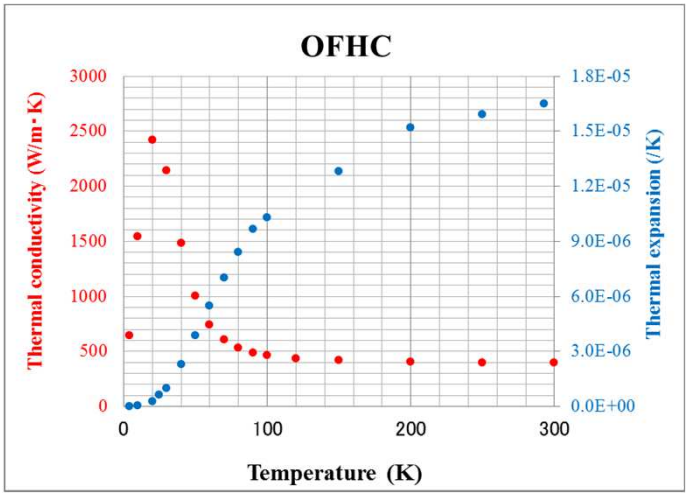

Fig 3.4.2 Thermal conductivity and thermal expansion

3.5 Schematic for the calculation lines

The Red lines in Fig. 3.5 show the calculation lines of surface slope(LINE ①, ②). The LINE ① is tangential direction, and the LINE ② is sagittal direction.

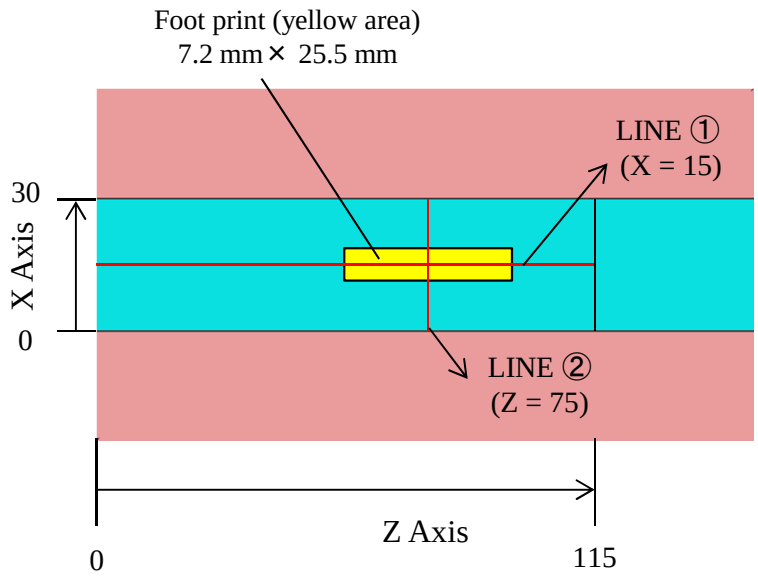

Fig. 3.5 Schematic for the calculation lines of surface slope

4. Calculation results (model 1 : TCC_15000 W/m^2・K)

4.1 Temperature profile

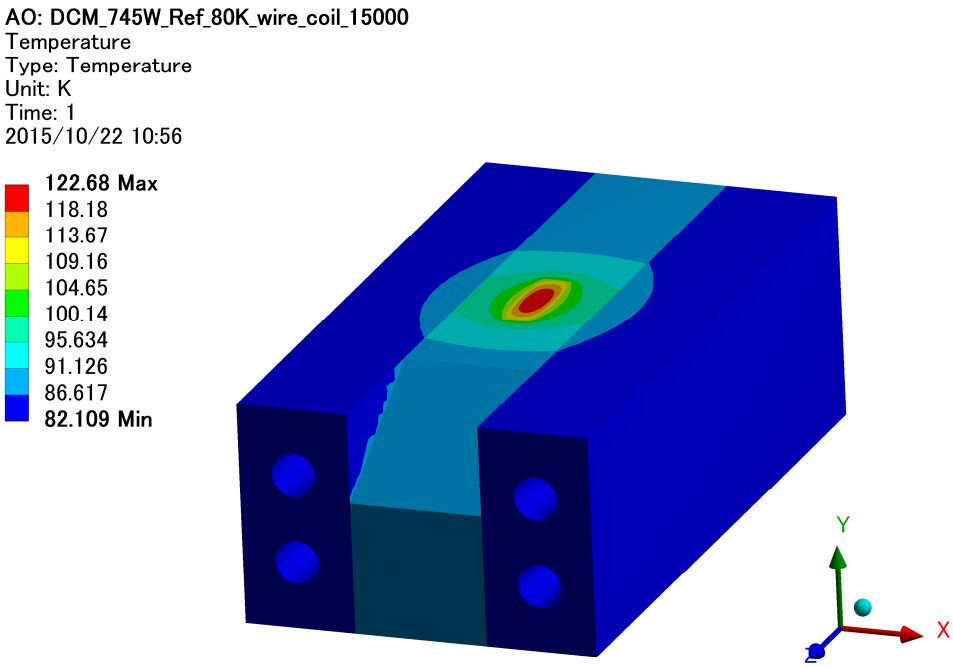

Fig. 4.1.1 Temperature profile

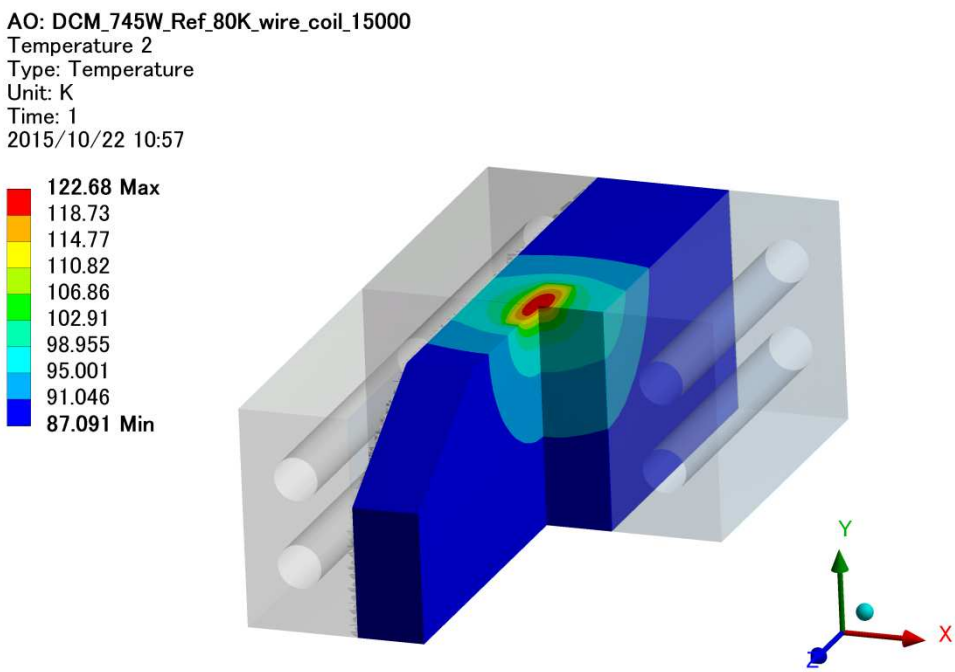

Fig. 4.1.2 Sectional view of temperature profile

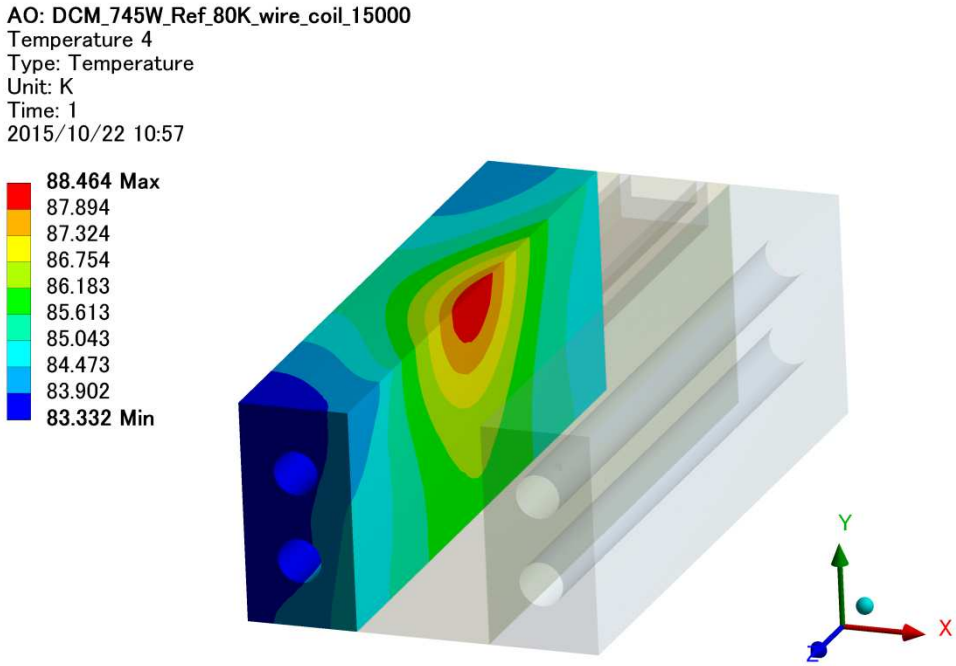

Fig. 4.1.3 Temperature profile of the OFHC

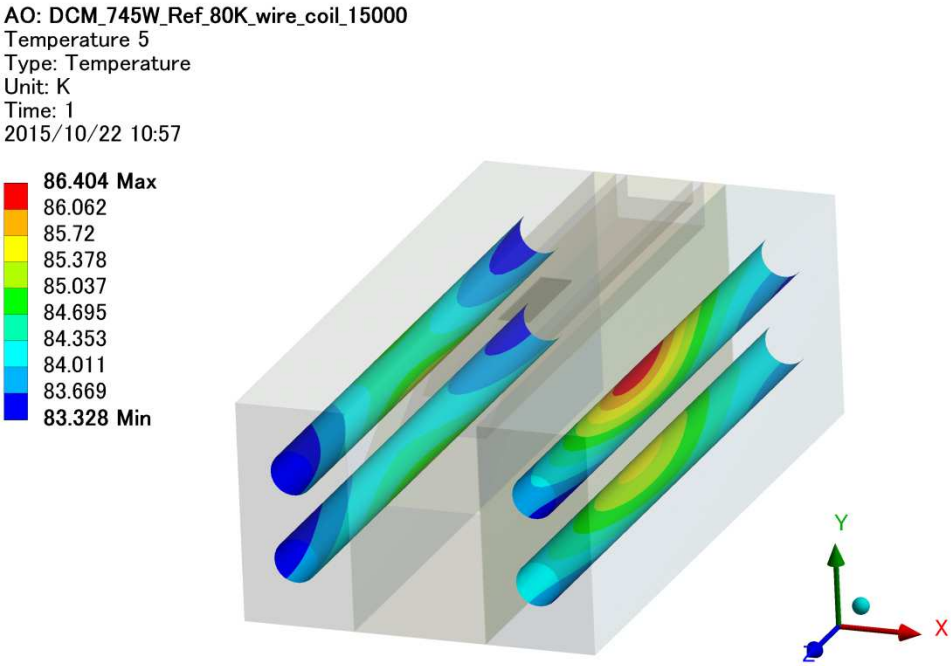

Fig. 4.1.4 Temperature profile of the cooling pipe

4.2 Deformation profile

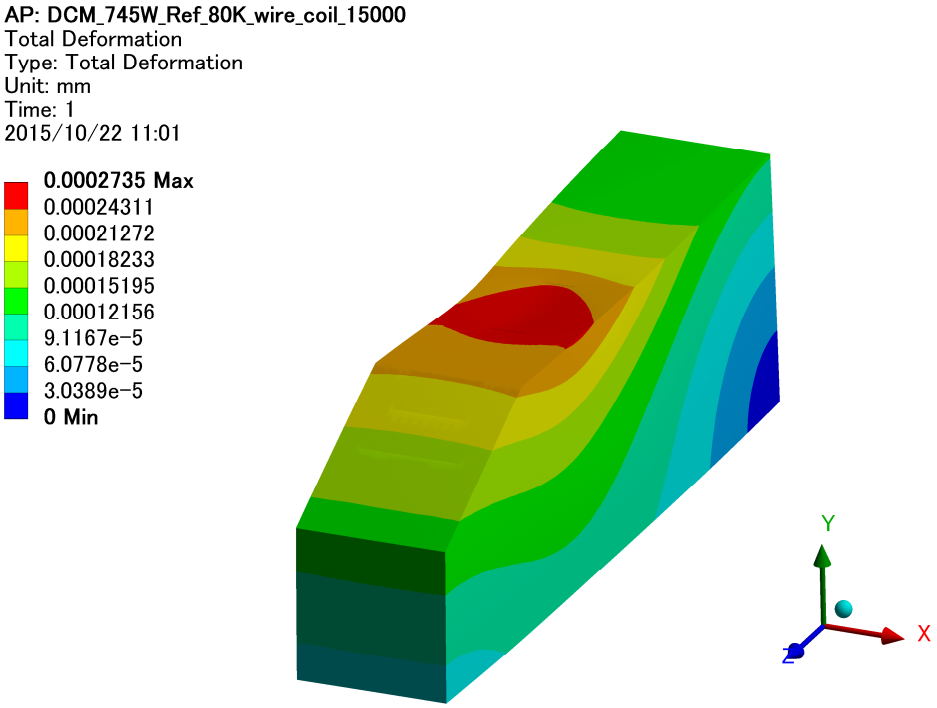

Fig. 4.2.1 Total Deformation

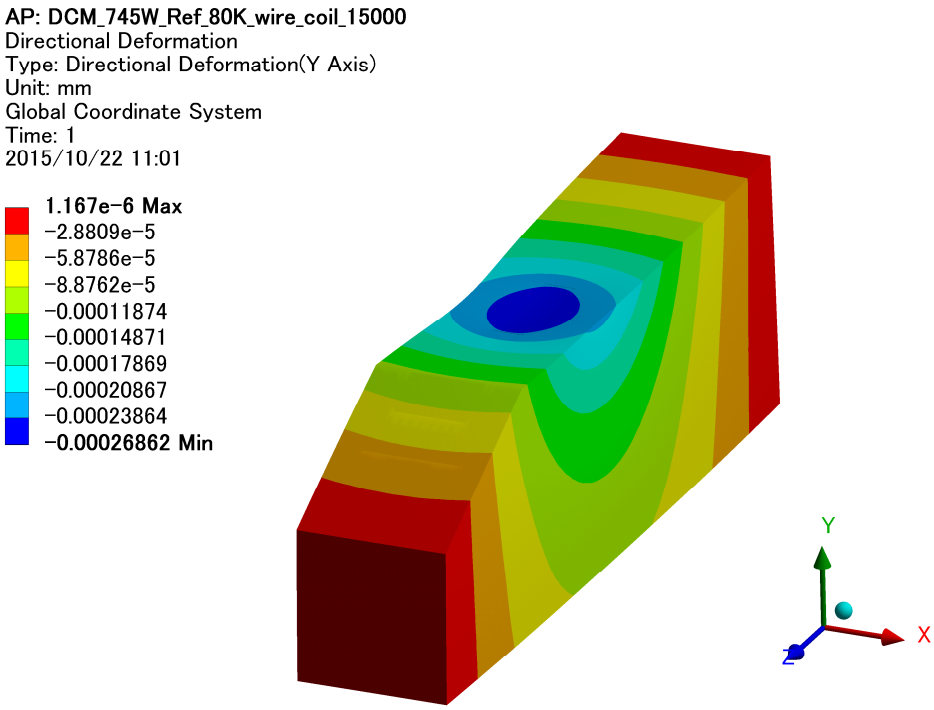

Fig. 4.2.2 Directional deformation (Y Axis)

4.3 Directional deformation along the tangential axis (LINE ①)

Fig. 4.3.1 shows the directional deformation of LINE ①.
Fig. 4.3.2 shows the Y axis directional deformation shape extracted from the line ①. Fig. 4.3.3 shows slope, which is obtained by differentiating the deformation result.

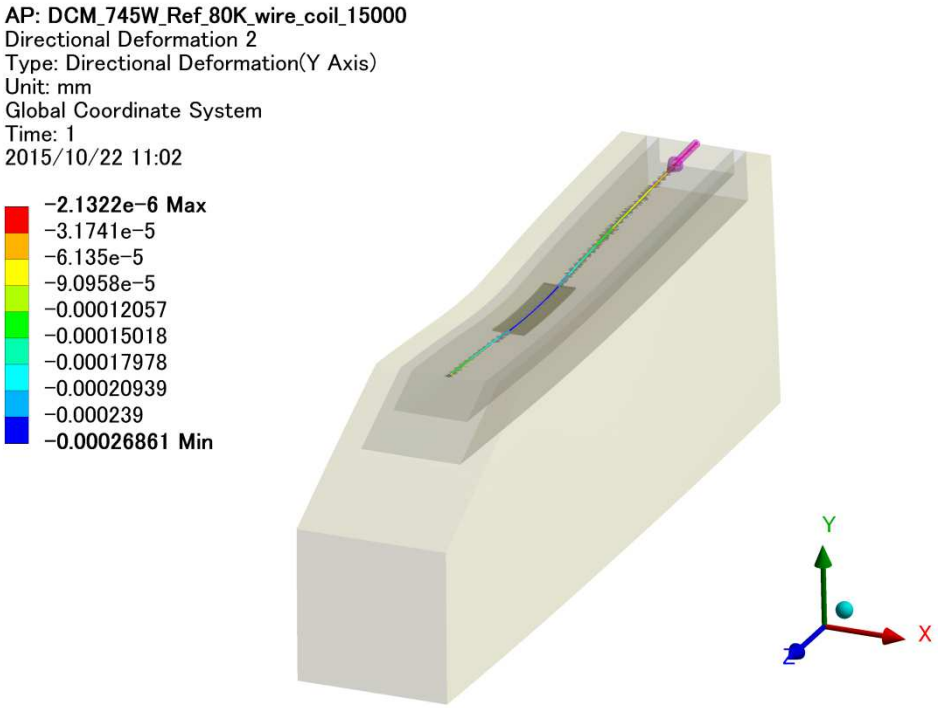

Fig. 4.3.1 Directional Deformation of LINE ① (Y Axis)

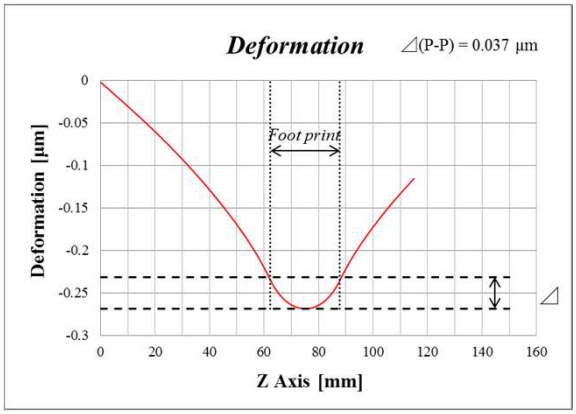

Fig. 4.3.2 Deformation of LINE ①

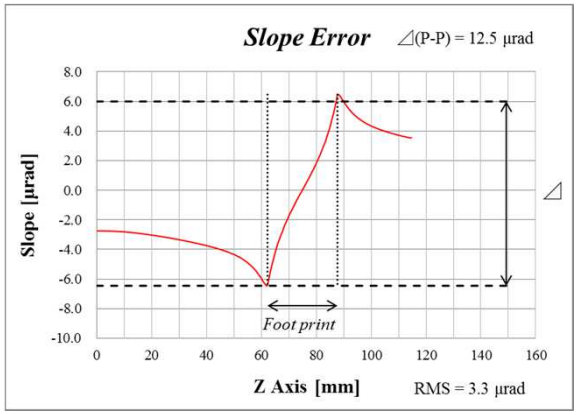

Fig. 4.3.3 Slope of LINE ①

4.4 Directional deformation along the sagittal axis (LINE ②)

Fig. 4.4.1 shows the directional deformation of LINE ②.
Fig. 4.4.2 shows the deformation shape of LINE ②. Fig. 4.4.3 shows slope, which is obtained by differentiating the deformation result.

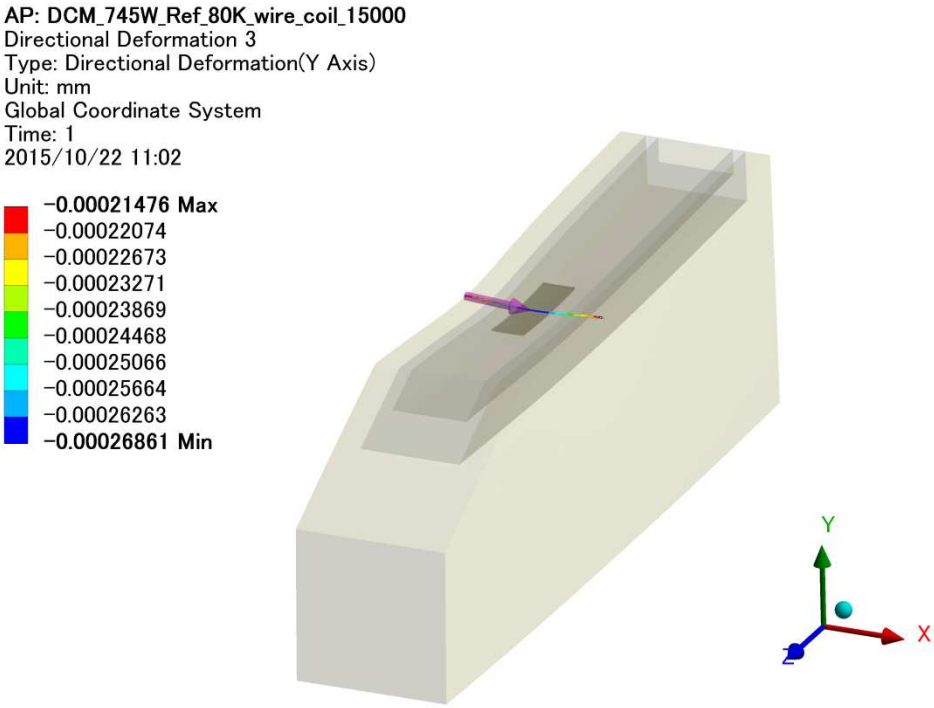

Fig. 4.4.1 Directional Deformation of LINE ② (Y Axis)

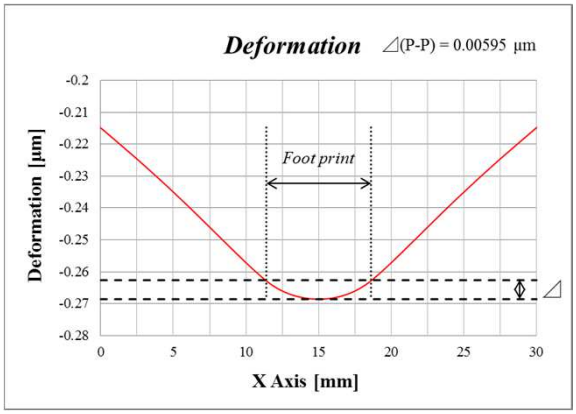

Fig. 4.4.2 Deformation of LINE ②

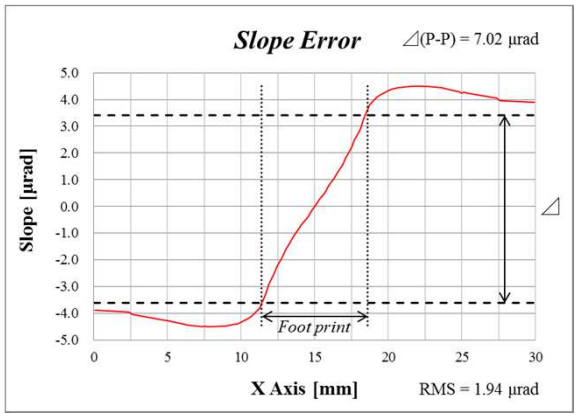

Fig. 4.4.3 Slope of LINE ②

5. Calculation results (model 2: TCC_7500 W/m^2・K)

5.1 Temperature profile

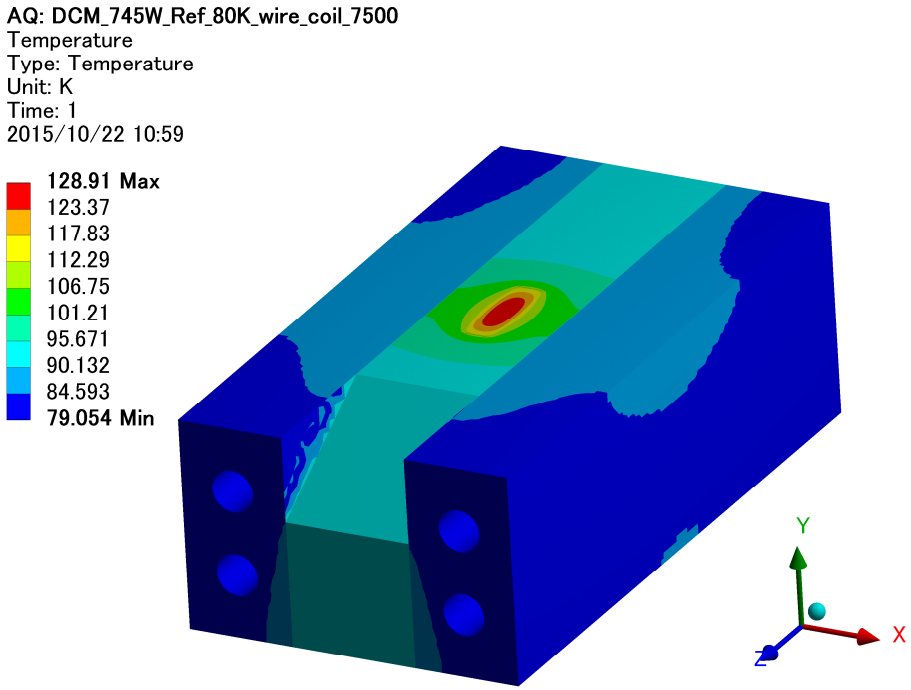

Fig. 5.1.1 Temperature profile

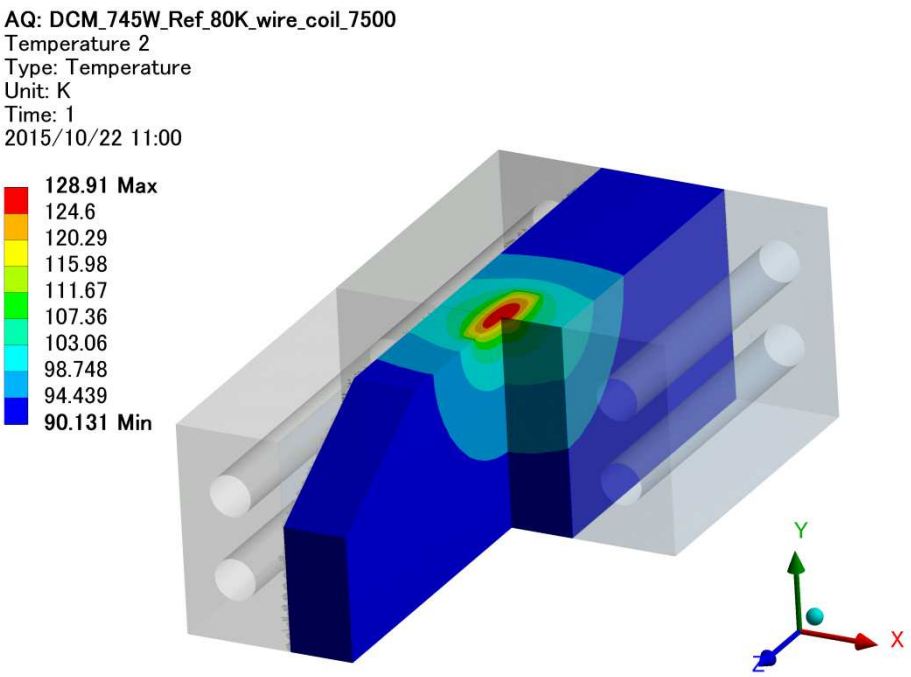

Fig. 5.1.2 Sectional view of temperature profile

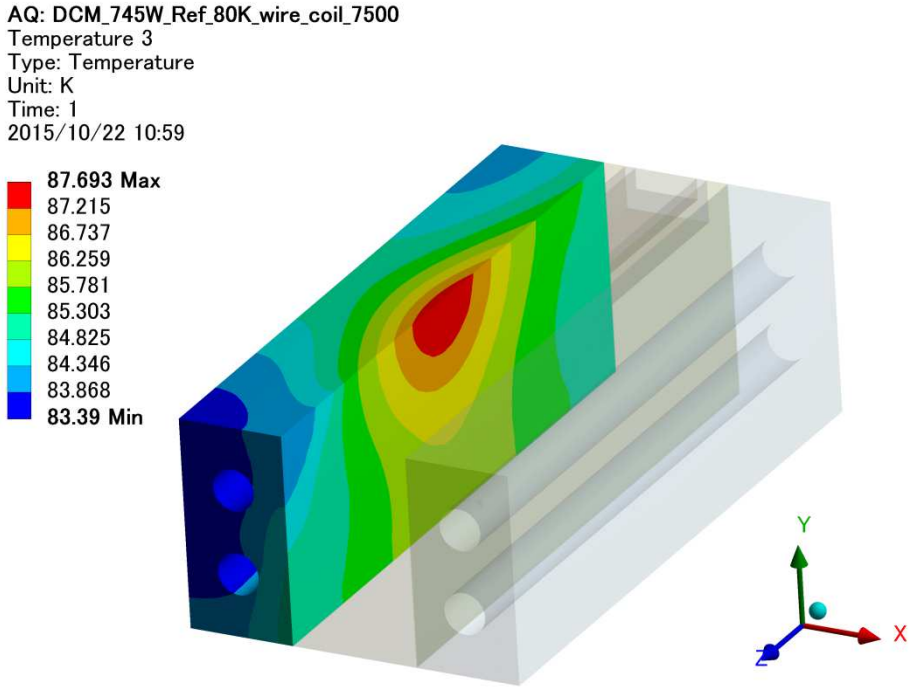

Fig. 5.1.3 Temperature profile of the OFHC

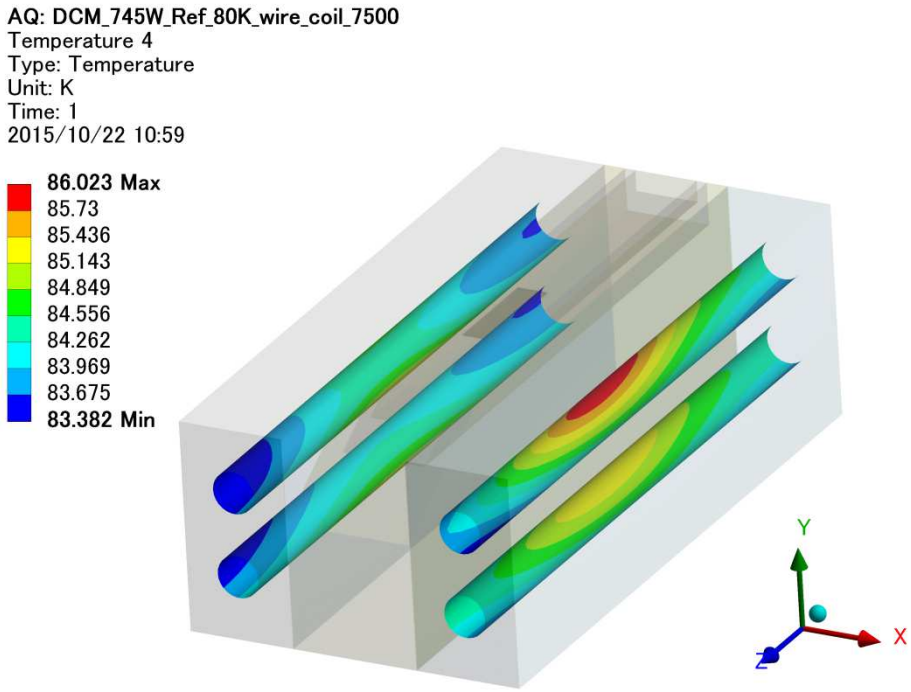

Fig. 5.1.4 Temperature profile of the cooling pipe

5.2 Deformation profile

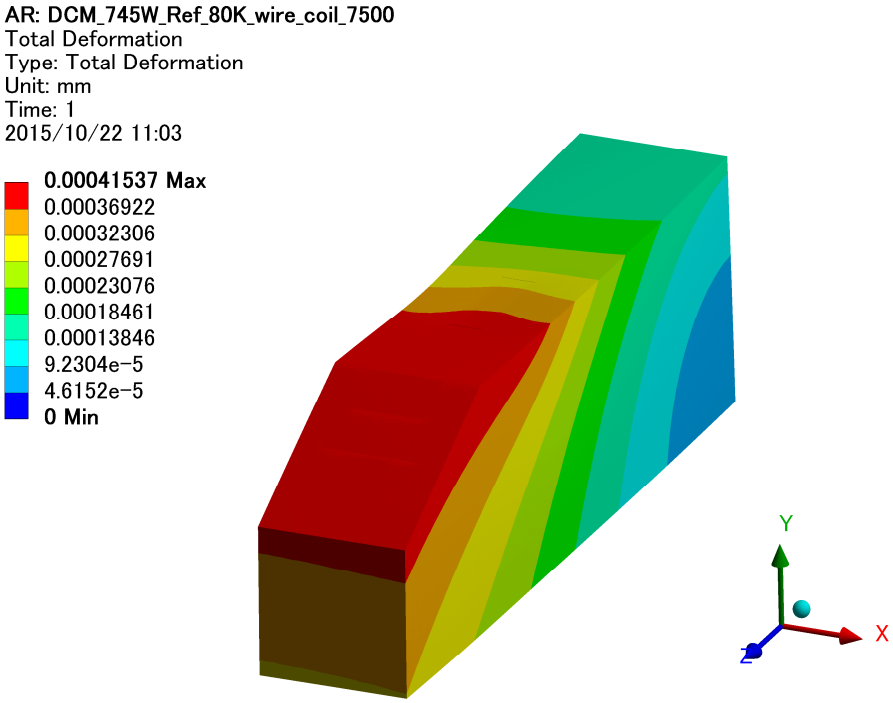

Fig. 5.2.1 Total Deformation

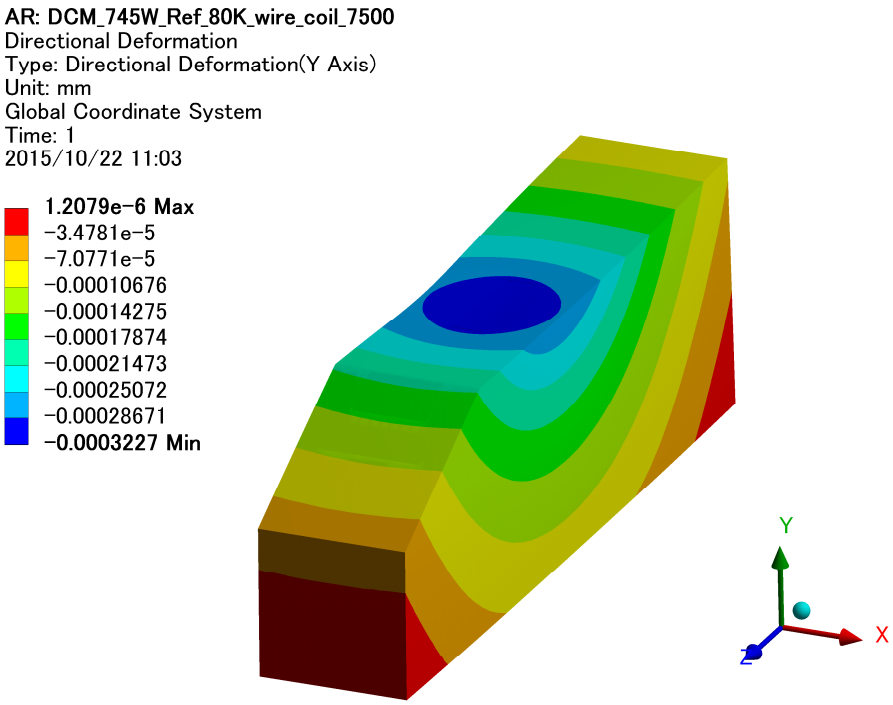

Fig. 5.2.2 Directional deformation of Si crystal

5.3 Directional deformation along the tangential axis (LINE ①)

Fig. 5.3.1 shows the directional deformation of LINE ①.
Fig. 5.3.2 shows the Y axis directional deformation shape extracted from the line ①. Fig. 5.3.3 shows slope, which is obtained by differentiating the deformation result.

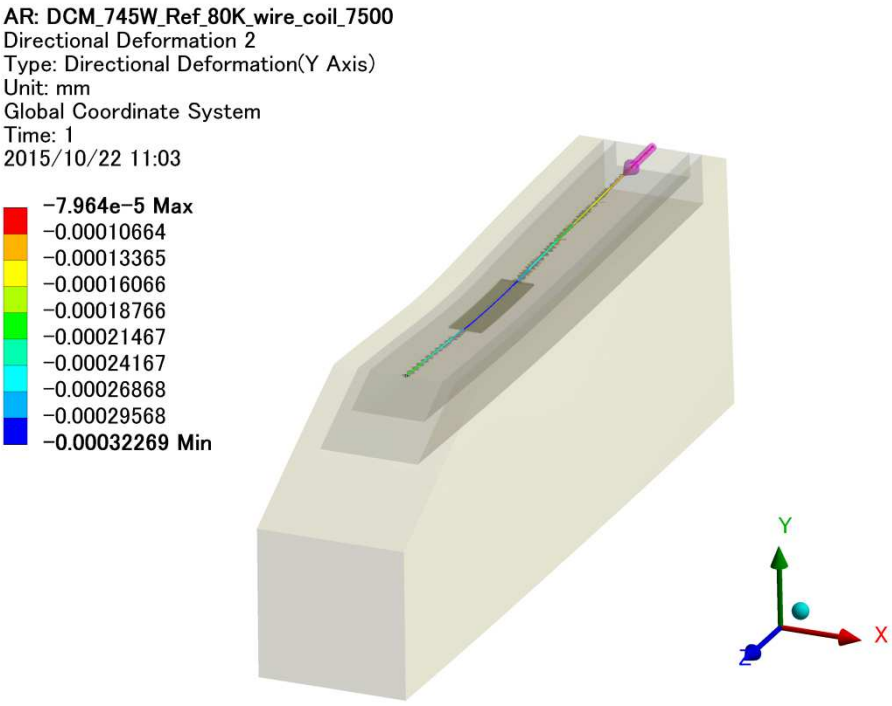

Fig. 5.3.1 Directional Deformation of LINE ① (Y Axis)

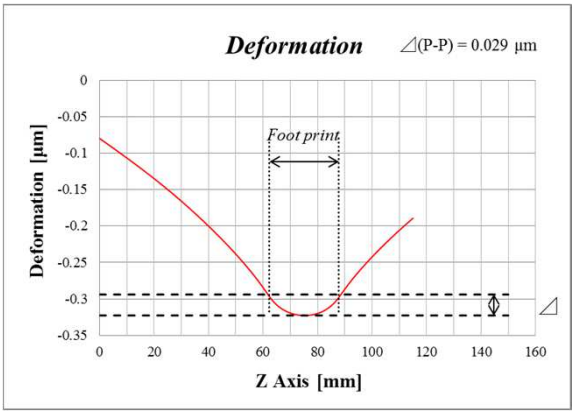

Fig. 5.3.2 Deformation of LINE ①

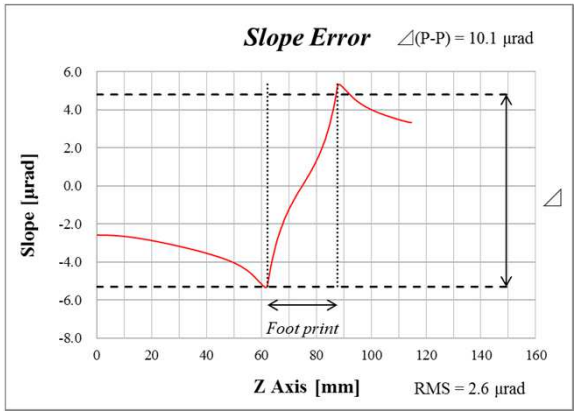

Fig. 5.3.3 Slope of LINE ①

5.4 Directional deformation along the sagittal axis (LINE ②)

Fig. 5.4.1 shows the directional deformation of LINE ②.
Fig. 5.4.2 shows the deformation shape of LINE ②. Fig. 5.4.3 shows slope, which is obtained by differentiating the deformation result.

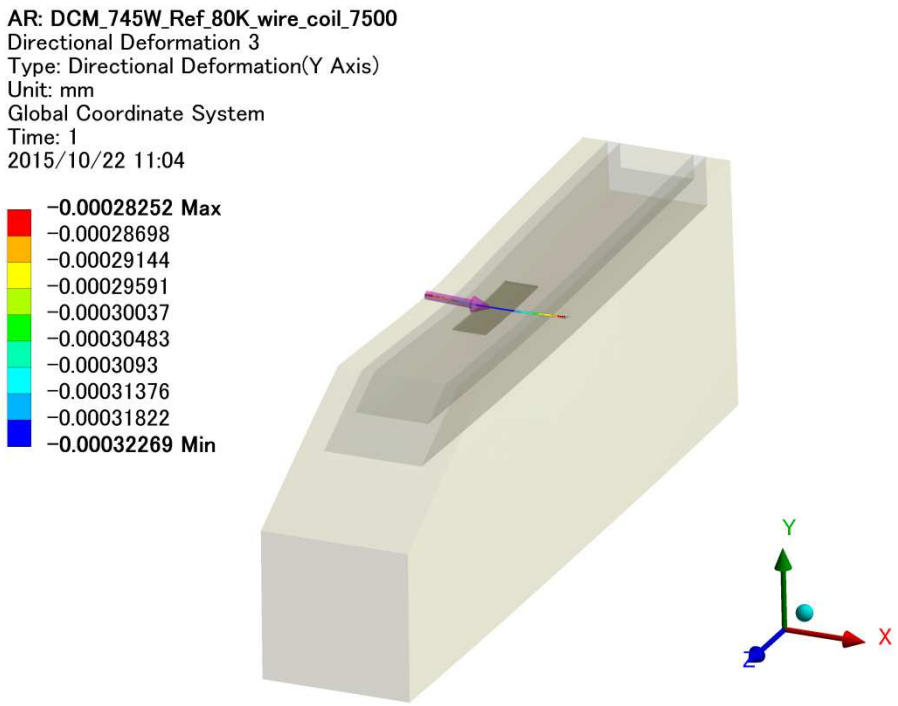

Fig. 5.4.1 Directional Deformation of LINE ② (Y Axis)

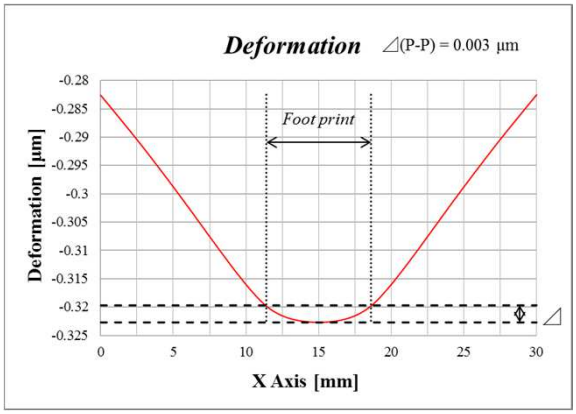

Fig. 5.4.2 Deformation of LINE ②

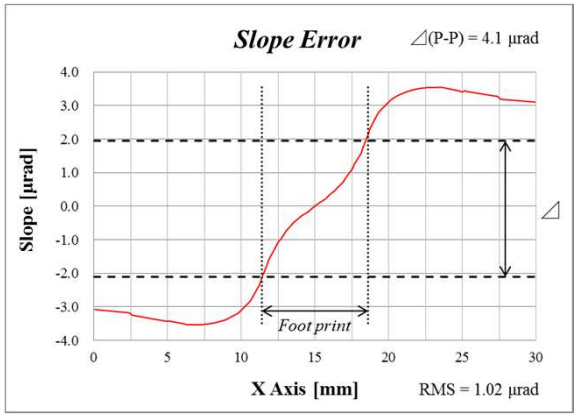

Fig. 5.4.3 Slope of LINE ②

NSLS 2 FXI
Double Crystal Monochromator

Thermo-Structural analysis

- Reference temperature is adopted from minimum temperature of Si crystal.
- Structural analysis was done by using single Si crystal.
- Wire coil is inserted to enhance the convection coefficient.
- The edge of Si crystal is tapered.

TOYAMA Co., Ltd

Date : Oct. 27, 2015

Created by : Tsubota

1. Scope

We have performed thermo-structural analysis of the double crystal monochromator(DCM) of NSLS 2 FXI beamline to evaluate the temperature, deformation and slope error. In this report, we have analyzed thermal contact conductance(TCC) 7500 W/m^2・K condition. The analysis was done by using ANSYS 16.0 Mechanical.

The analysis conditions are listed in Table 1. These values are cited from the Technical Specification(NX-C-SPC-FXI-PDS-001). The more detail of the analysis conditions are written in Page 3.

Table 2 shows the analysis results. All these results clear the design criteria(LT-C-XFD-SPC-COM-001).

	Analysis conditions	
Incident photon energy	**12**	keV
Total Absorbed Power	**938**	W
Foot print	**H × V = 7.2 mm × 43.7 mm**	
Thermal contact conductance (Si – OFHC)	**7500**	W/m^2・K
Reference temperature	**92.7**	K

Table 1. Analysis conditions

	Analysis resutls	
Maximum Temperature	**127.5**	K
Slope Error in tangential direction (⊿P-P)	**9.9**	μrad
Slope Error in sagittal direction (⊿P-P)	**2.4**	μrad
Substrate material	**Si crystal**	

Table 2. Results Summary

2. Dimensional drawing

Please see the dimensional drawing of the first crystal of DCM in Fig. 2.1, Fig.2.2 and Fig. 2.3. The analysis was done by using these simplified model

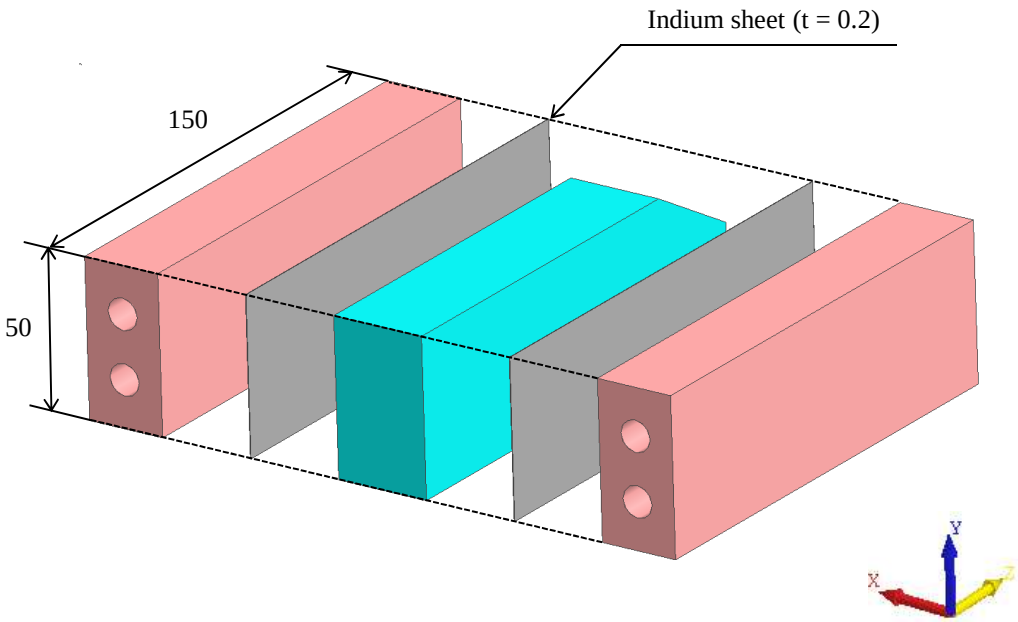

Fig. 2.1 Exploded view

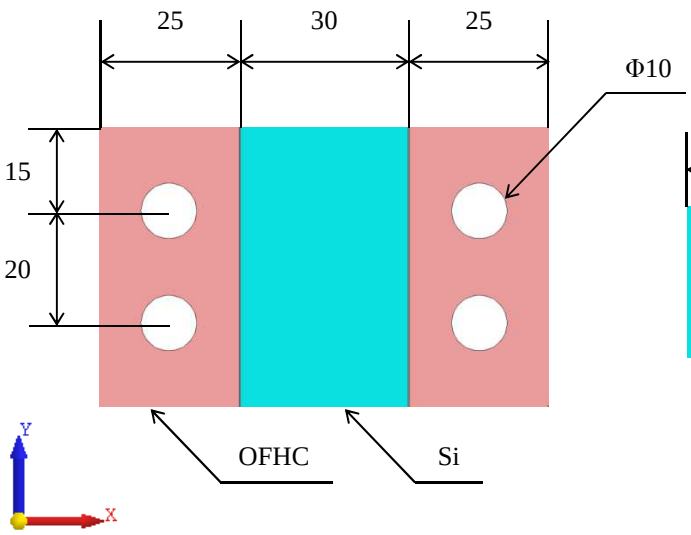

Fig. 2.2 Front view

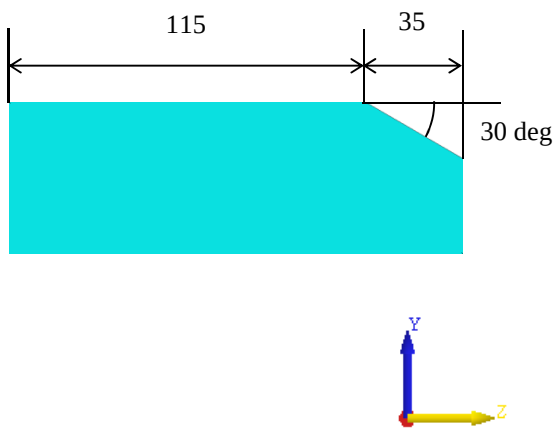

Fig. 2.3 Crystal configuration (side view)

3. Boundary conditions

3.1 For thermal analysis

3.1.1 Analysis conditions

The green area in Fig. 3.1.1.1 shows the heat input area. Detail of the heat input power map and penetration depth are shown in page 4. The yellow surface in Fig. 3.1.1.2 shows the convection surface. Table 3.1.1 show the boundary conditions for thermal analysis. We assumed the thermal contact conductance is enhanced by inserting the indium sheet. And we assumed the convection coefficient is enhanced by inserting the wire coil.

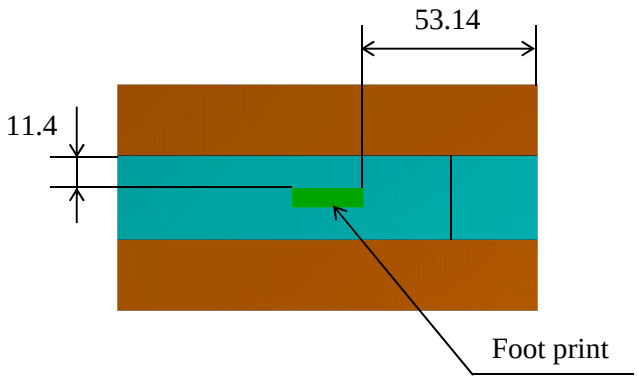

Fig. 3.1.1.1 Heat input area (Top view)

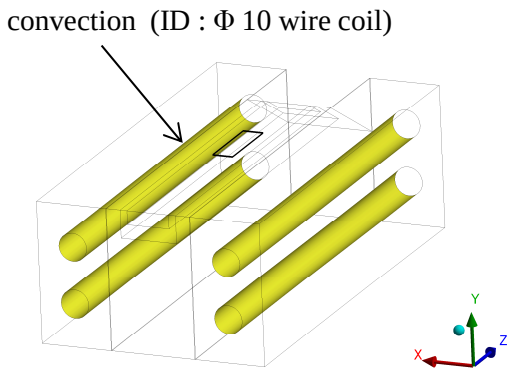

Fig. 3.1.1.2 convection surface

	Analysis Conditions	
Liquid nitrogen temperature	**80**	K
Total absorbed power	**938**	W
Maximum heat flux	**2.76**	W/mm^2
Distance from the source	**34.3**	m
Inclined angle	**9.48**	degrees
Foot print	**H × V = 7.2 mm × 43.7 mm**	
Convection coefficient	**9000**	W/m^2・K
Pipe inner diameter	**10**	mm
Flow rate	**9.4**	L/min
Flow velocity	**2.0**	m/s
Thermal contact conductance between Si and OFHC	**7500**	W/m^2・K

Table 3.1.1 Analysis Conditions

3.1.2 Heat input calculation for thermal analysis

Fig. 3.1.2.1 shows the schematic diagram of the synchrotron light penetration into the Si crystal. Table 3.1.2 shows the absorbed power list used for analysis. These calculation was done by using the SPECTRA software*. Fig. 3.1.2.2 shows the power map at the penetration depth 0-0.05 mm.

* T. Tanaka and H. Kitamura, J. Synchrotron Radiation 8 (2001) 1221.
Email : ztanaka@spring8.or.jp
URL : http://radiant.harima.riken.go.jp/spectra/index.html

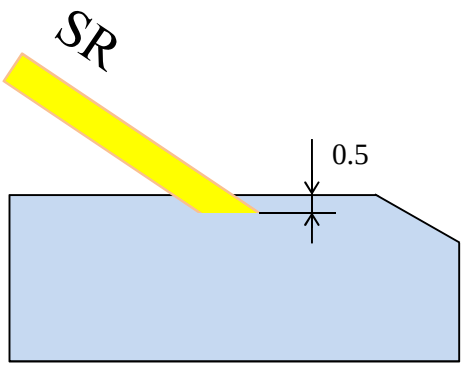

Fig. 3.1.2.1 Schematic diagram

Penetration depth (mm)	Absorbed power (W)
0 - 0.05	**811.93**
0.05 - 0.10	**97.32**
0.10 - 0.15	**17.22**
0.15 - 0.20	**10.32**
0.20 - 0.25	**0.73**
0.25 - 0.30	**0.26**
0.30 - 0.35	**0.11**
0.35 - 0.40	**0.05**
0.40 - 0.45	**0.03**
0.45 - 0.50	**0.02**

Table 3.1.2 Absorbed Power

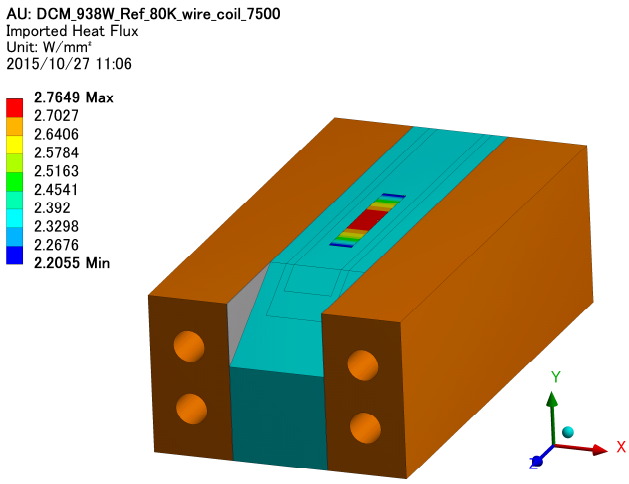

Fig. 3.1.2.2 Power map at penetration depth 0-0.05 mm

3.2 For Static structural analysis

Fig. 3.2 shows the support boundary conditions. The analysis was done by using single Si crystal. All boundary conditions for static structural analysis is shown in Table 3.2.

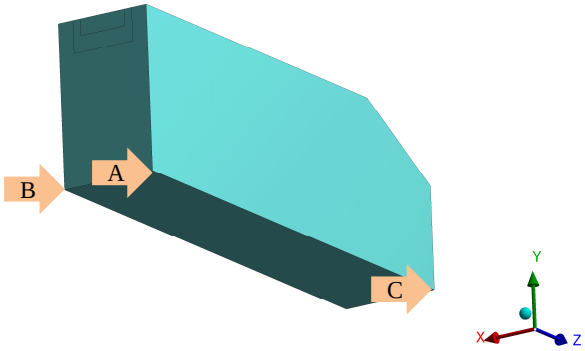

Fig. 3.2 Support points

	Analysis Conditions	
Point A	**Fixed : X, Y, Z Axis**	
Point B	**Fixed : Y, Z Axis**	**Free : X Axis**
Point C	**Fixed : Y Axis**	**Free : X, Z Axis**
Reference temperature	**92.7 K**	

* The reference temperature was defined from the minimum temperature of Si crystal.

Table 3.2 Support boundary conditions

3.3 Mesh model

Fig. 3.3 shows the mesh model used for analysis.

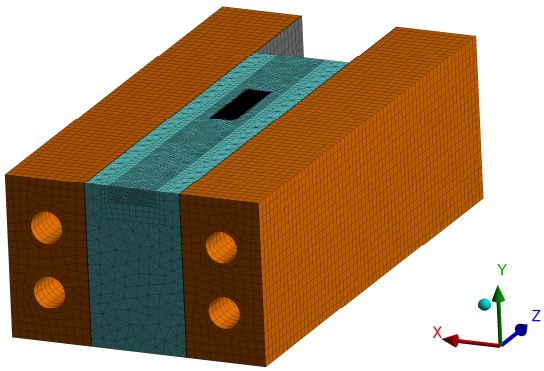

Fig. 3.3 Mesh model

3.4 Physical properties of materials

Table 3.4 shows the physical properties of materials used for analysis.

	Density	Young's modulus	Poisson's ratio	Thermal Expansion	Thermal Conductivity
Si	2330 kg/m³	1.65E+11 Pa	0.26	Fig. 3.4.1	Fig. 3.4.1
OFHC	8940 kg/m³	1.18E+11 Pa	0.34	Fig. 3.4.2	Fig. 3.4.2
Indium	7310 kg/m³	1.08E+10 Pa	0.30	2.54E-05 /K	*

* The thermal conductivity is adjusted to become each model thermal contact conductance.

Table 3.4 Physical properties of materials

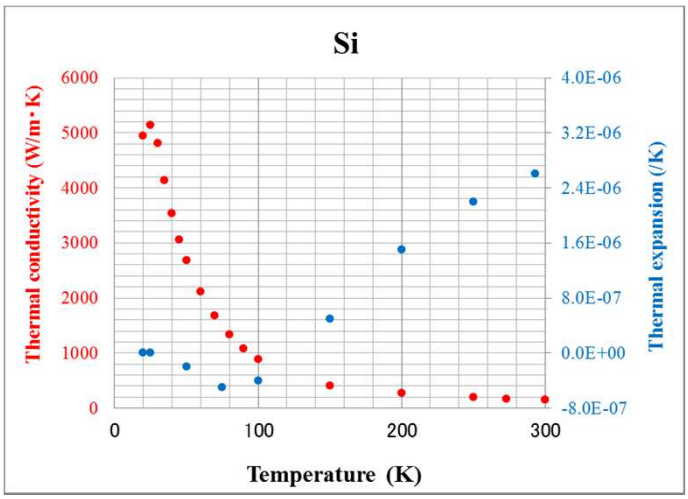

Fig 3.4.1 Thermal conductivity and thermal expansion

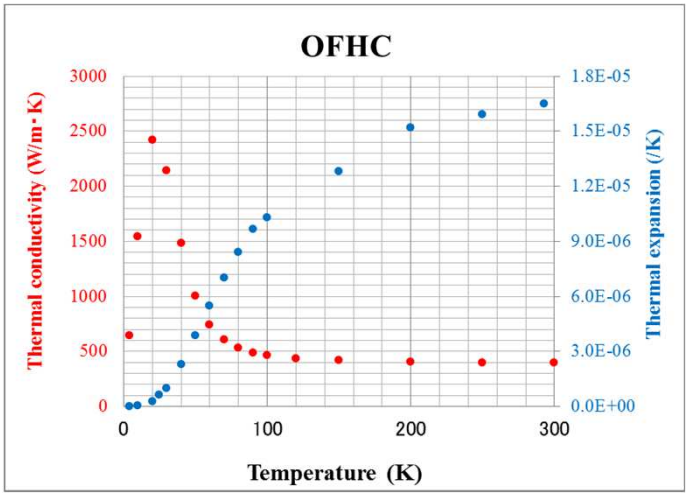

Fig 3.4.2 Thermal conductivity and thermal expansion

3.5 Schematic for the calculation lines

The Red lines in Fig. 3.5 show the calculation lines of surface slope(LINE ①, ②). The LINE ① is tangential direction, and the LINE ② is sagittal direction.

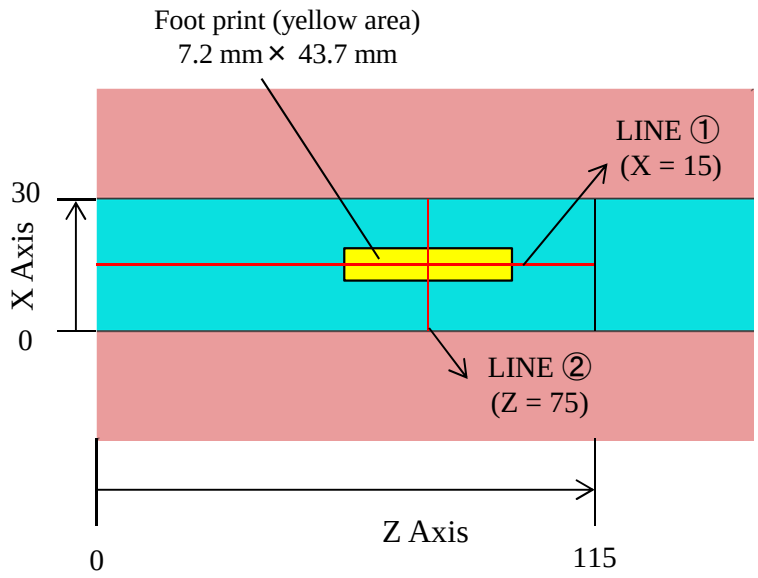

Fig. 3.5 Schematic for the calculation lines of surface slope

4. Calculation results (TCC_7500 W/m^2・K)

4.1 Temperature profile

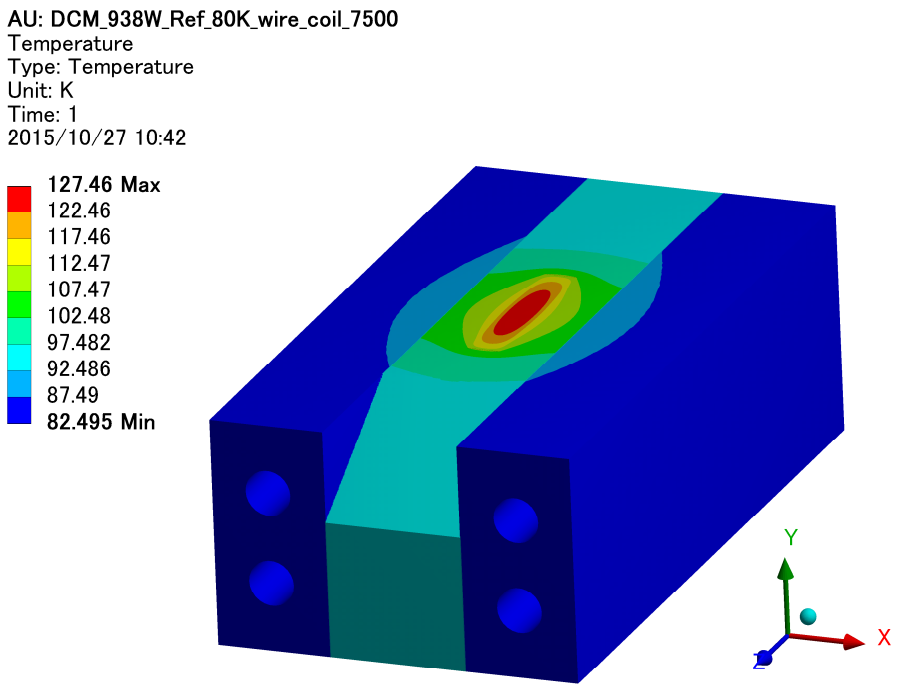

Fig. 4.1.1 Temperature profile

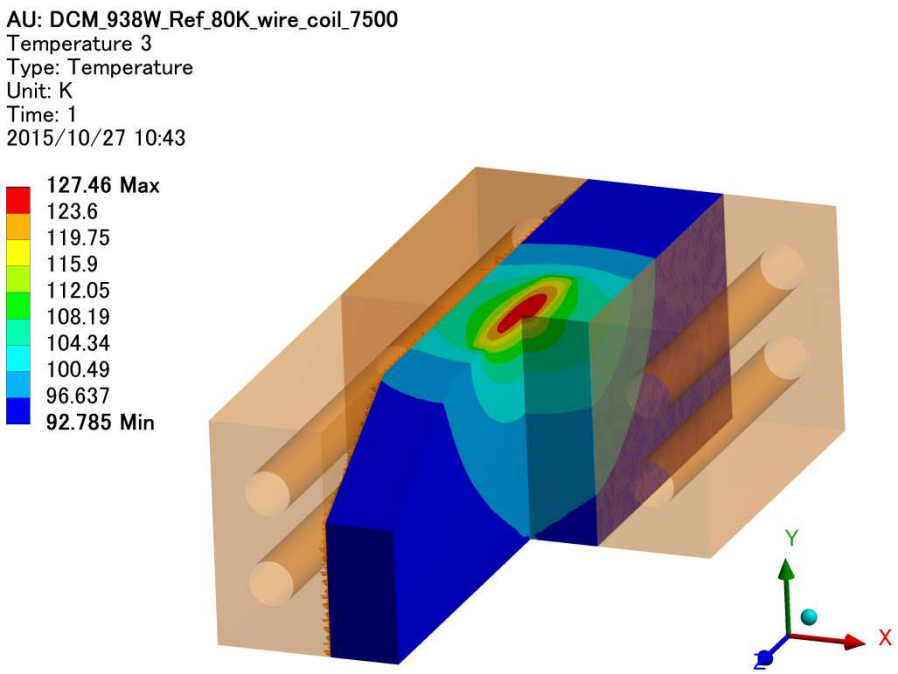

Fig. 4.1.2 Sectional view of temperature profile

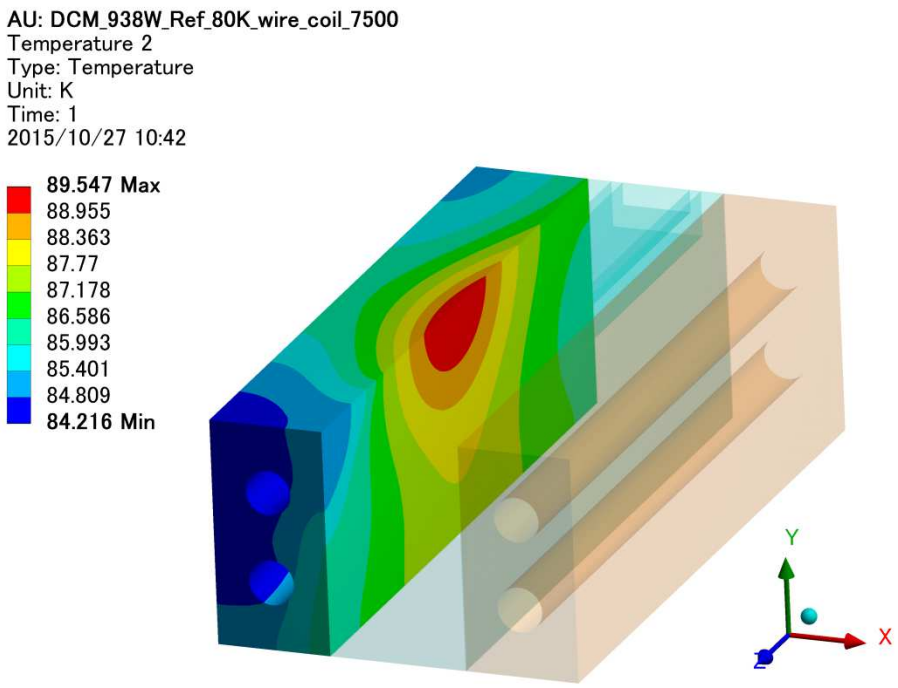

Fig. 4.1.3 Temperature profile of the OFHC

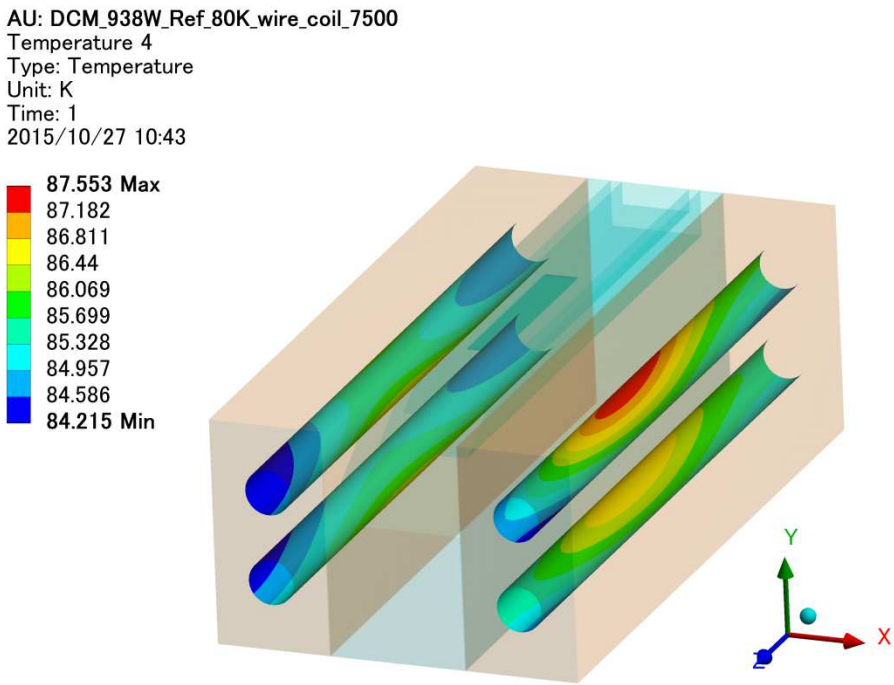

Fig. 4.1.4 Temperature profile of the cooling pipe

4.2 Deformation profile

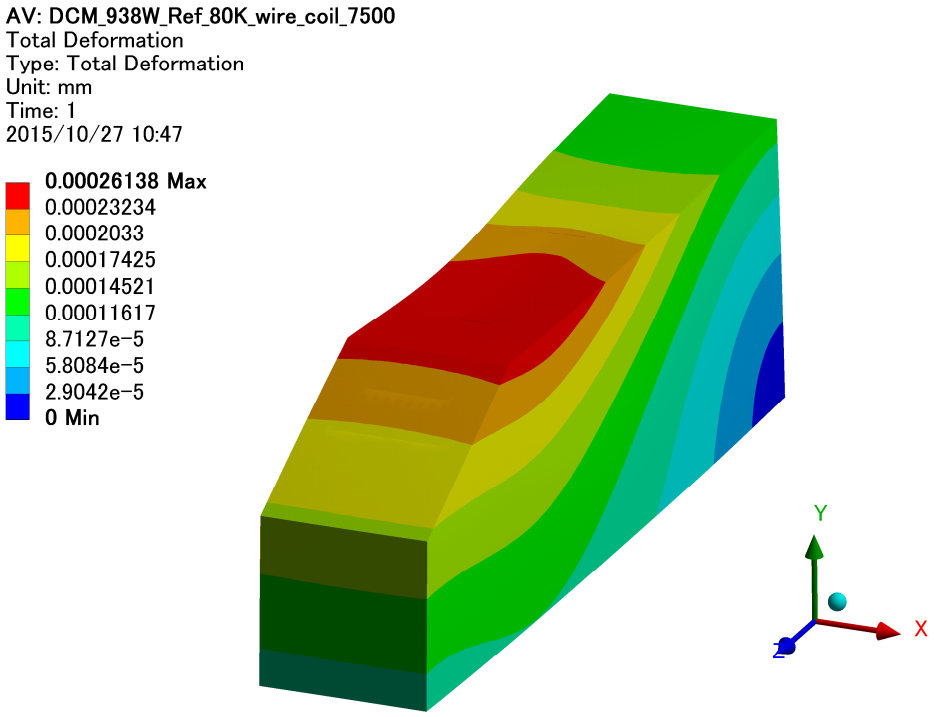

Fig. 4.2.1 Total Deformation

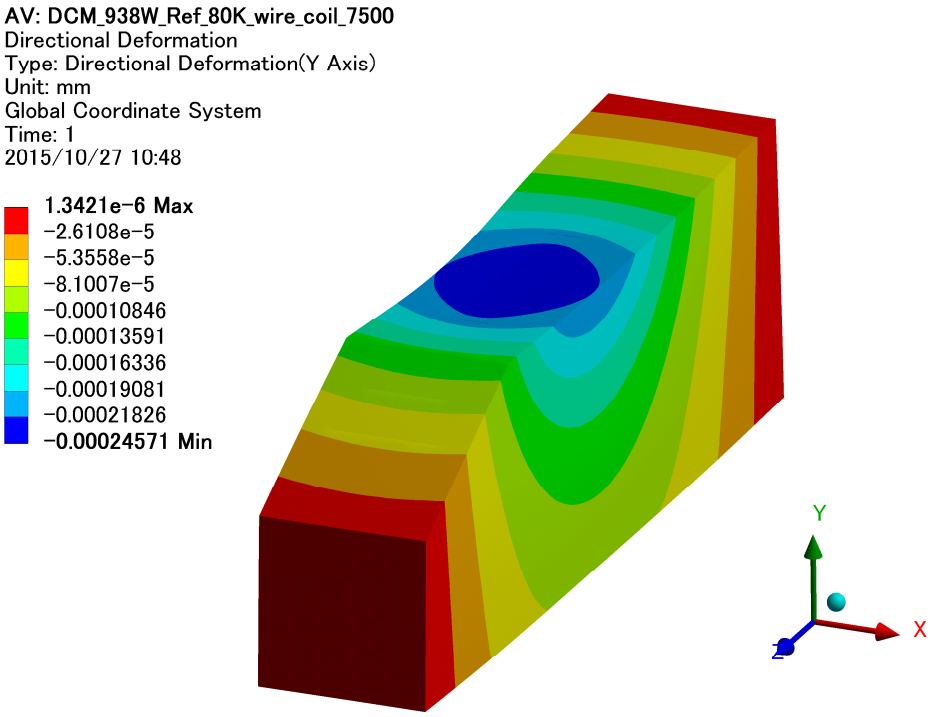

Fig. 4.2.2 Directional deformation (Y Axis)

4.3 Directional deformation along the tangential axis (LINE ①)

Fig. 4.3.1 shows the directional deformation of LINE ①.
Fig. 4.3.2 shows the Y axis directional deformation shape extracted from the line ①. Fig. 4.3.3 shows slope, which is obtained by differentiating the deformation result.

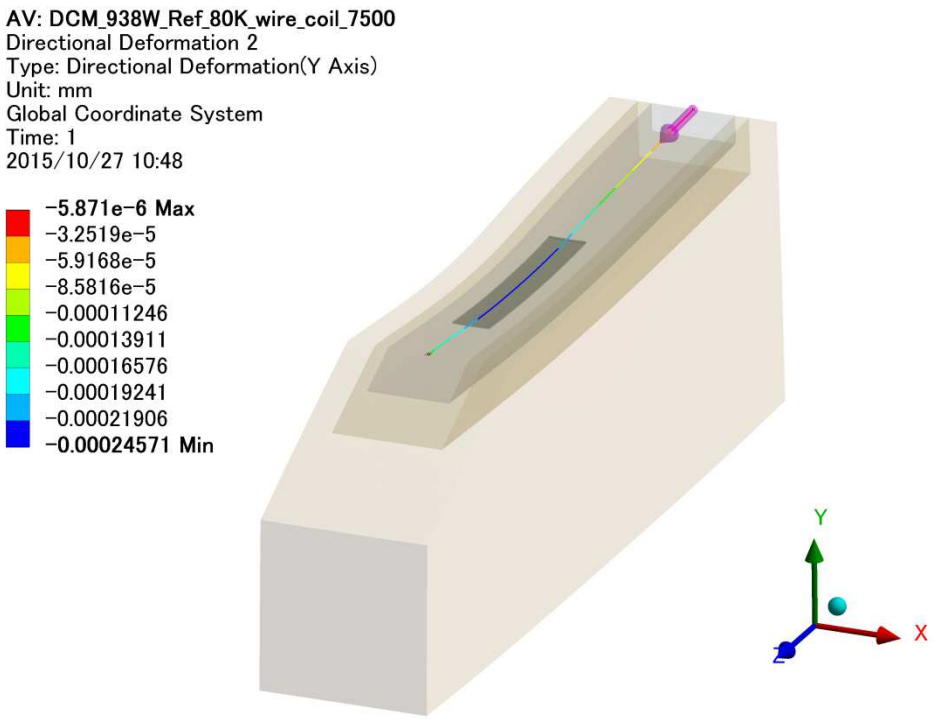

Fig. 4.3.1 Directional Deformation of LINE ① (Y Axis)

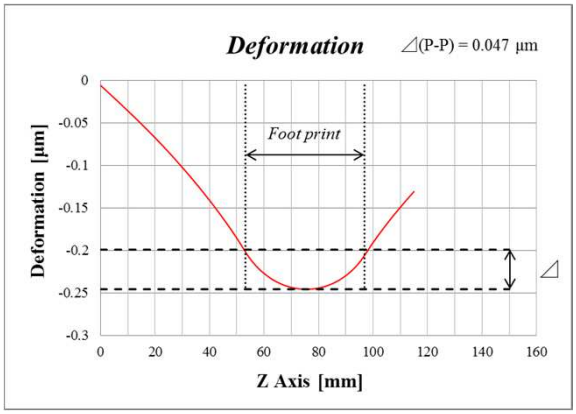

Fig. 4.3.2 Deformation of LINE ①

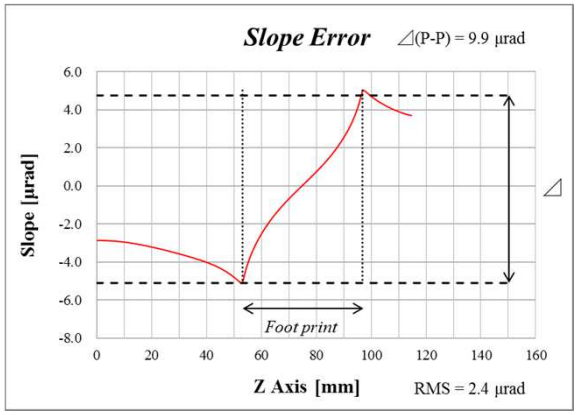

Fig. 4.3.3 Slope of LINE ①

4.4 Directional deformation along the sagittal axis (LINE ②)

Fig. 4.4.1 shows the directional deformation of LINE ②.
Fig. 4.4.2 shows the deformation shape of LINE ②. Fig. 4.4.3 shows slope, which is obtained by differentiating the deformation result.

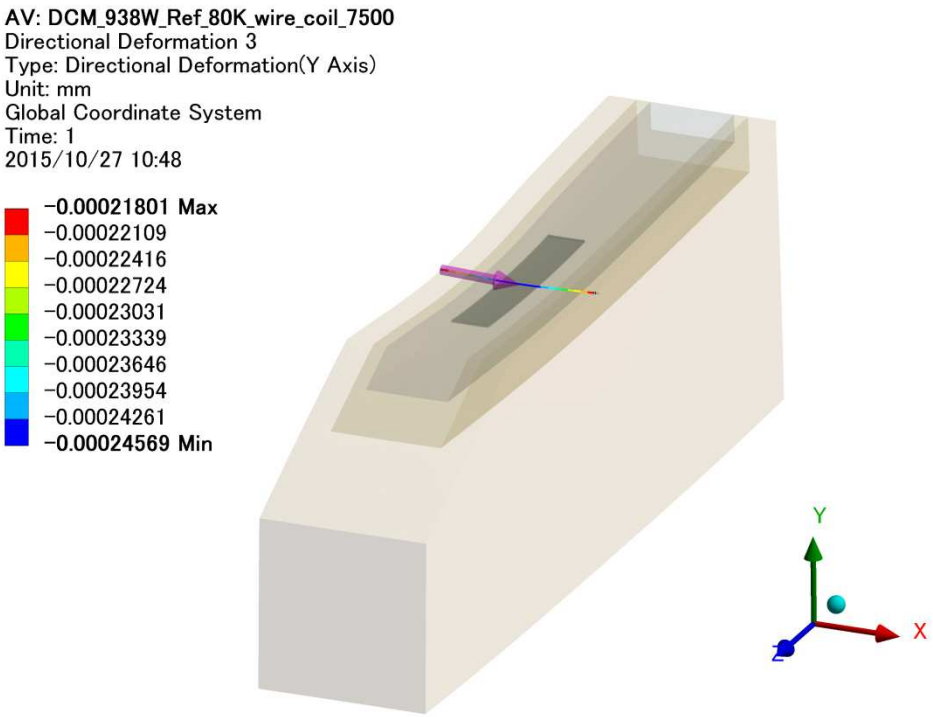

Fig. 4.4.1 Directional Deformation of LINE ② (Y Axis)

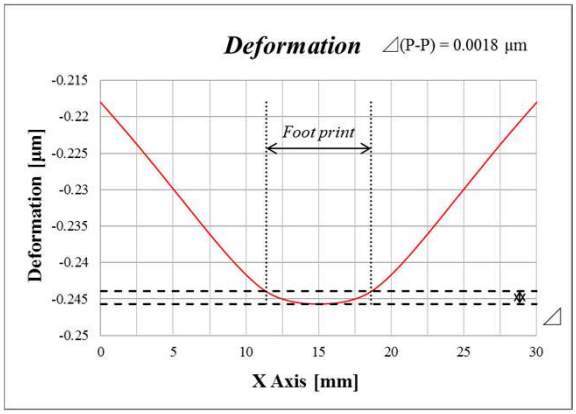

Fig. 4.4.2 Deformation of LINE ②

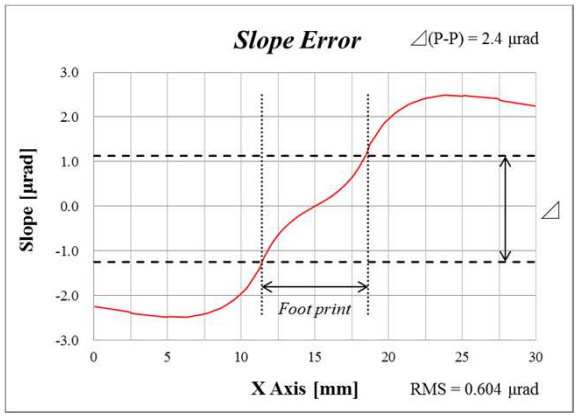

Fig. 4.4.3 Slope of LINE ②

NSLS 2 FXI Double Crystal Monochromator

Pressure Vessel Structural analysis
- Vacuum and High inner pressure condition -

TOYAMA Co., Ltd

Date : Nov. 19, 2015

Created by : Hanashima

1. Scope

We have performed Pressure Vessel structural analysis of the Double Crystal Monochromator (DCM) chamber of NSLS 2 FXI beamline to evaluate the deformation, stress and strain profiles. In this report, we assumed the High inner pressure is 15 psig when the vessel subject to back fill pressurization. The calculation was done by using ANSYS 16.0 Professional.

The analysis conditions are listed in Table 1.1. These values are cited from the Vacuum Consensus Guidelines (BNL-81715-2008-IR_Vacuum_Consensus_Guidelines_for_DOE_Labs). The more detail of the analysis conditions are written in Page 3 to 4.

Table 1.2 shows the analysis results. All these analysis results cleared the design criteria (BNL-81715-2008-IR).

	Vessel Pressure [Pa]		Gravity [m/s^2]
	Internal	External	
Vacuum condition	**0**	**101300**	**9.8**
High inner pressure condition	**103421 (15 psig)**	**0**	

Table 1.1 Analysis conditions

		Results			
Vacuum condition	Maximum deformation	**0.09**	mm		
	Maximum Von Mises Stress	**45**	MPa		
	Maximum Equivalent Elastic Strain	**0.02**	%		
		Bayonet room		Crystal room	
High inner pressure condition	Maximum deformation	**0.02**	mm	**0.09**	mm
	Maximum Von Mises Stress	**14**	MPa	**39**	MPa
	Maximum Equivalent Elastic Strain	**0.007**	%	**0.02**	%
Substrate material		**SUS304L**			

Table 1.2 Results Summary

2. Dimensional drawing

Please see the dimensional drawing of the DCM chamber in Fig. 2.1 and Fig. 2.2. The analysis was done by using these simplified model

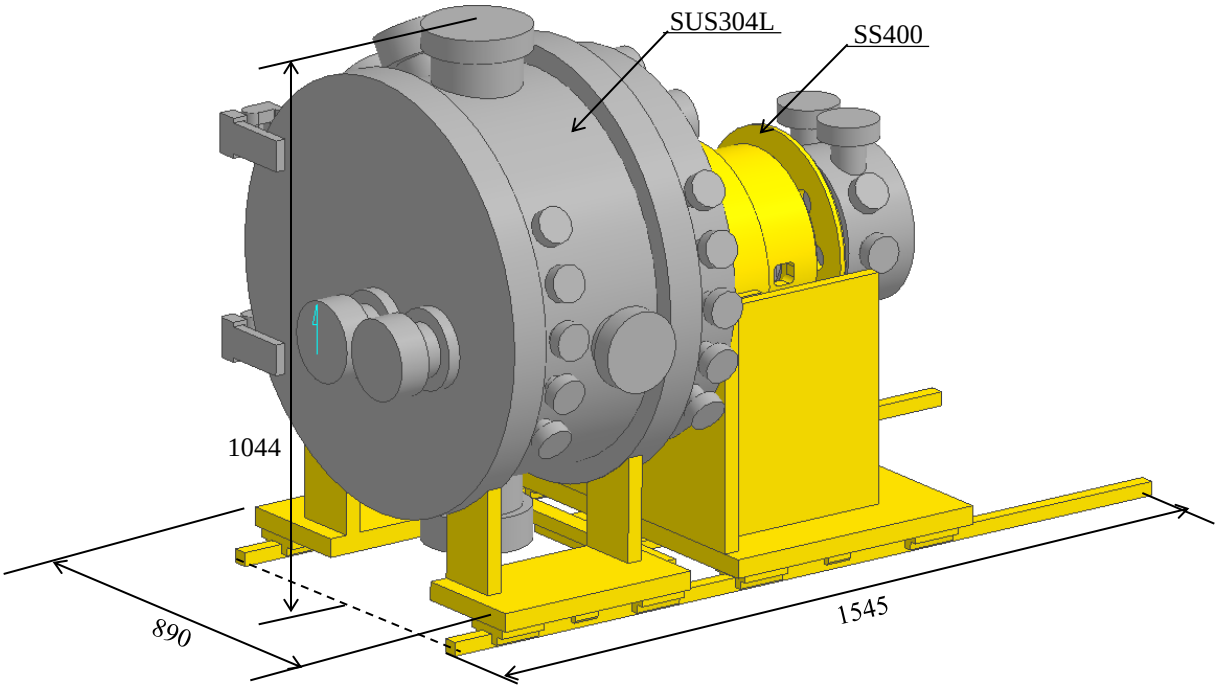

Fig. 2.1 Bird's eye view of chamber

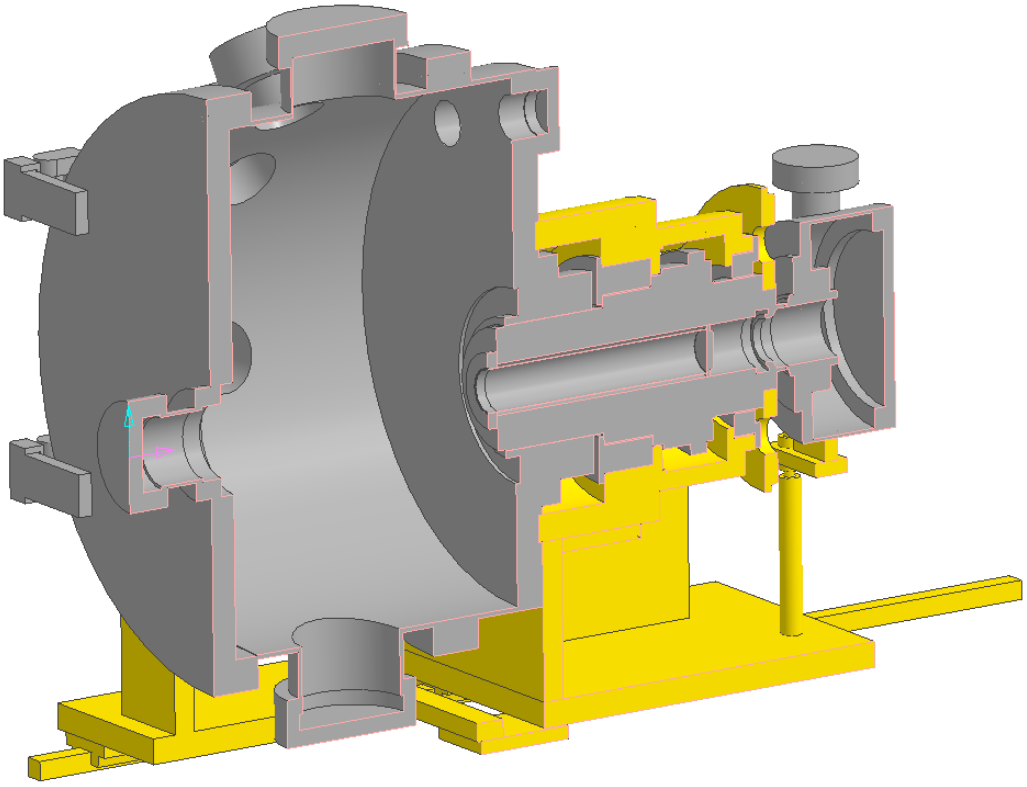

Fig. 2.2 Sectional view of chamber

3. Boundary conditions

3.1 For Static structural analysis

Fig. 3.1 shows the support points. All boundary conditions for static structural analysis is shown in Table 3.1.

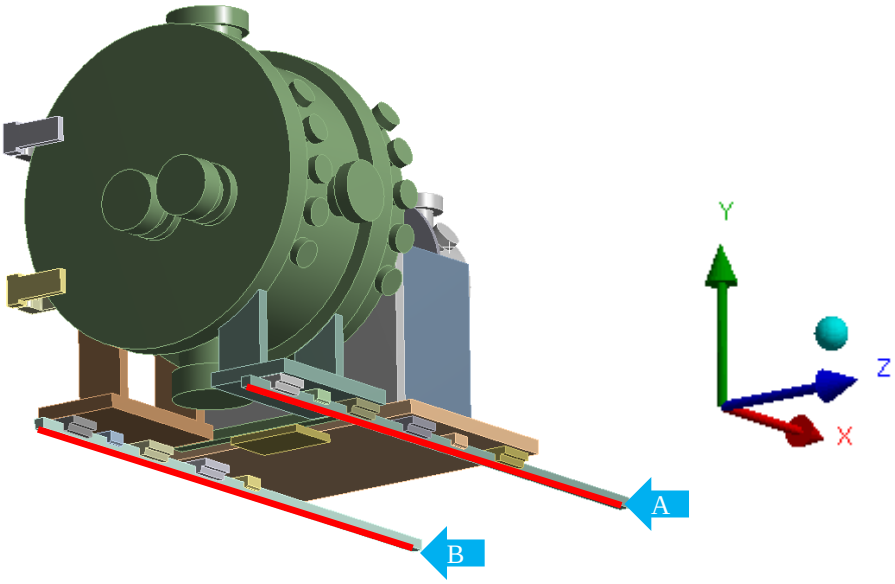

Fig. 3.2 Support Points

	Analysis Conditions
Surface A , B	**Fixed : X, Y, Z Axis**

Table 3.1 Support boundary conditions

3.2 Mesh model

Fig. 3.2 shows the mesh model used for analysis.

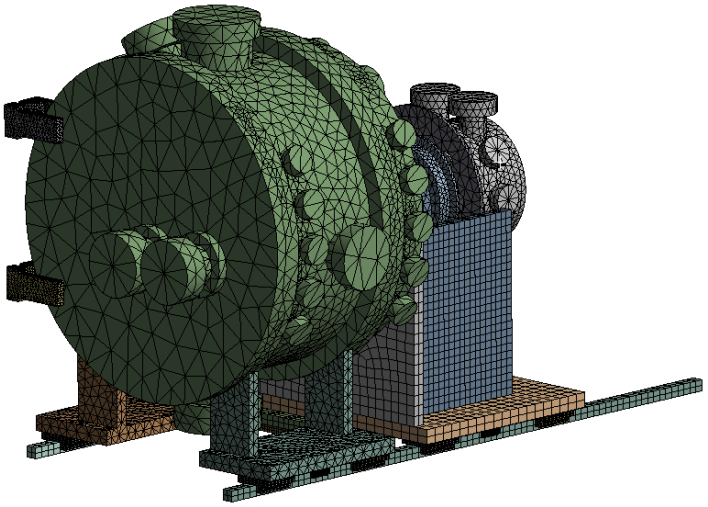

Fig. 3.2 Mesh model

3. Boundary conditions

3.3 Physical properties of materials

Table 3.3 shows the physical properties of materials used for analysis.

	Density	Young's modulus	Poisson's ratio
SUS304L	7930 kg/m³	1.93E+11 Pa	0.31
SS400	7900 kg/m³	2.06E+11 Pa	0.30

Table 3.4 Physical properties of materials

3.4 Pressure condition

The pressure conditions are as below.

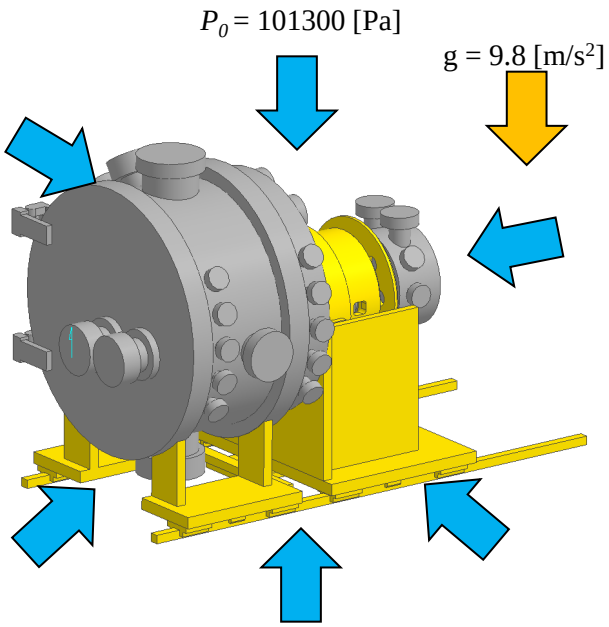

Fig. 3.5.1 Vacuum condition

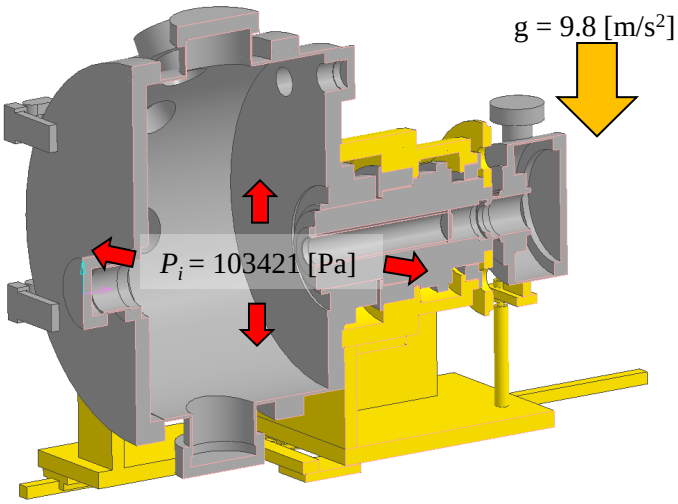

Fig. 3.5.2 High inner pressure condition

3.4 Pressure condition

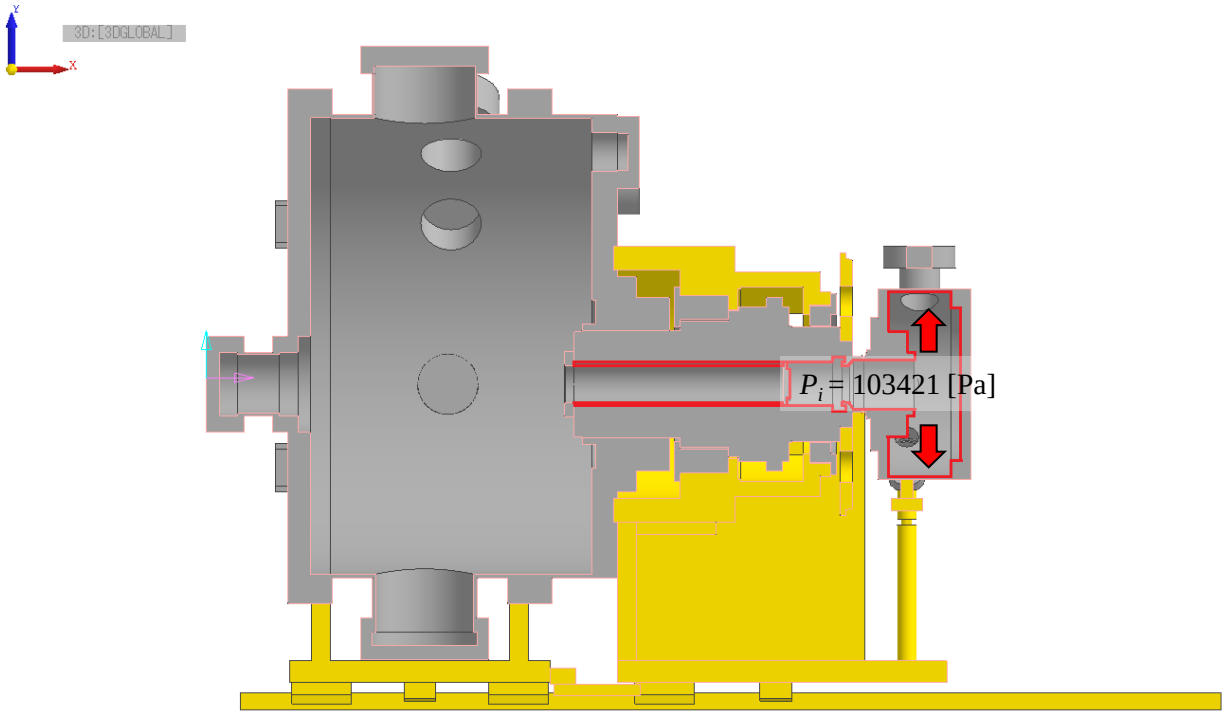

Fig. 3.5.3 High inner pressure condition - Bayonet room -

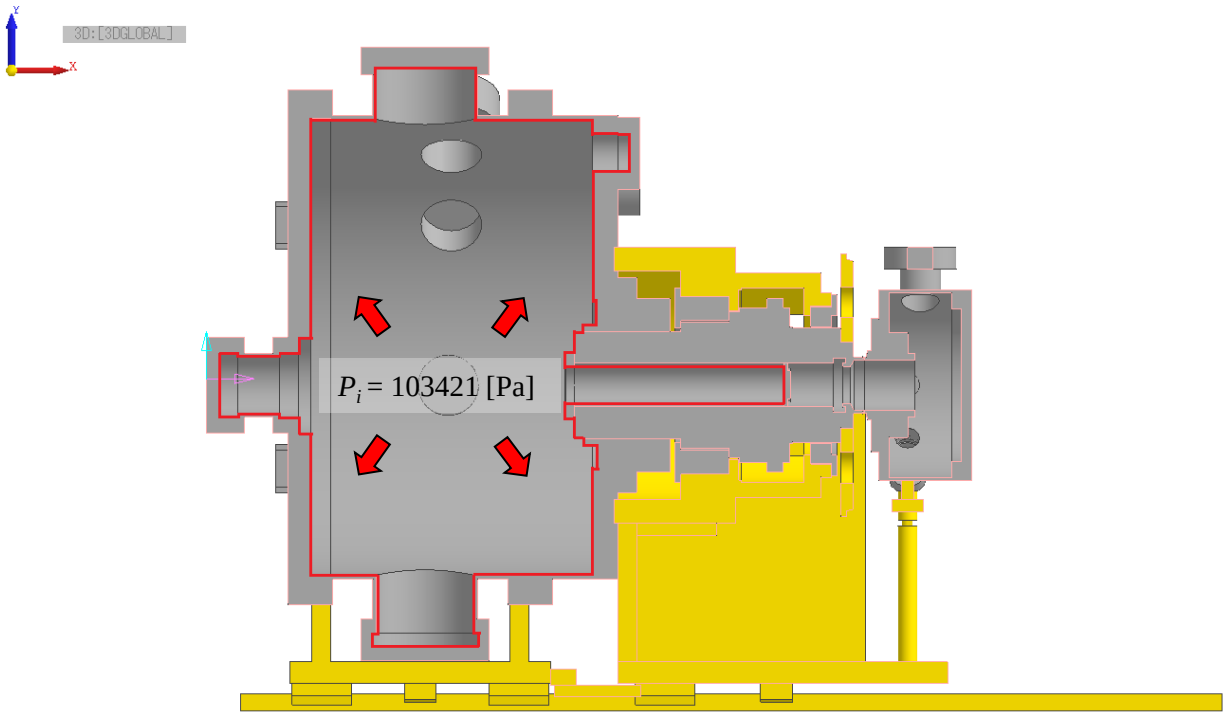

Fig. 3.5.4 High inner pressure condition - Crystal room -

4. Calculation results

4.1 Deformation profile – Vacuum condition

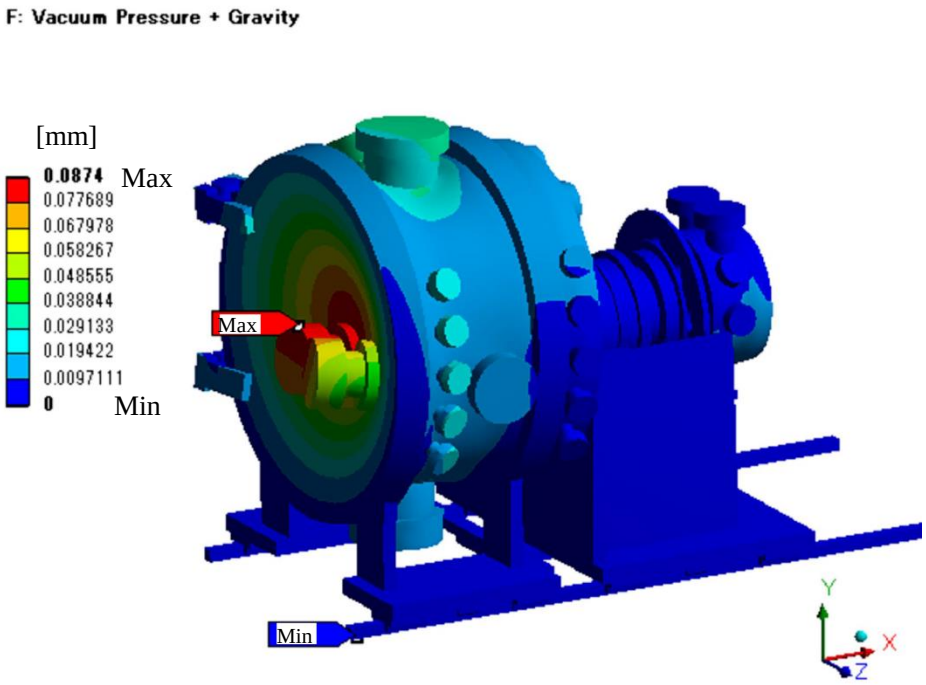

Fig. 4.1.1 Total deformation profile

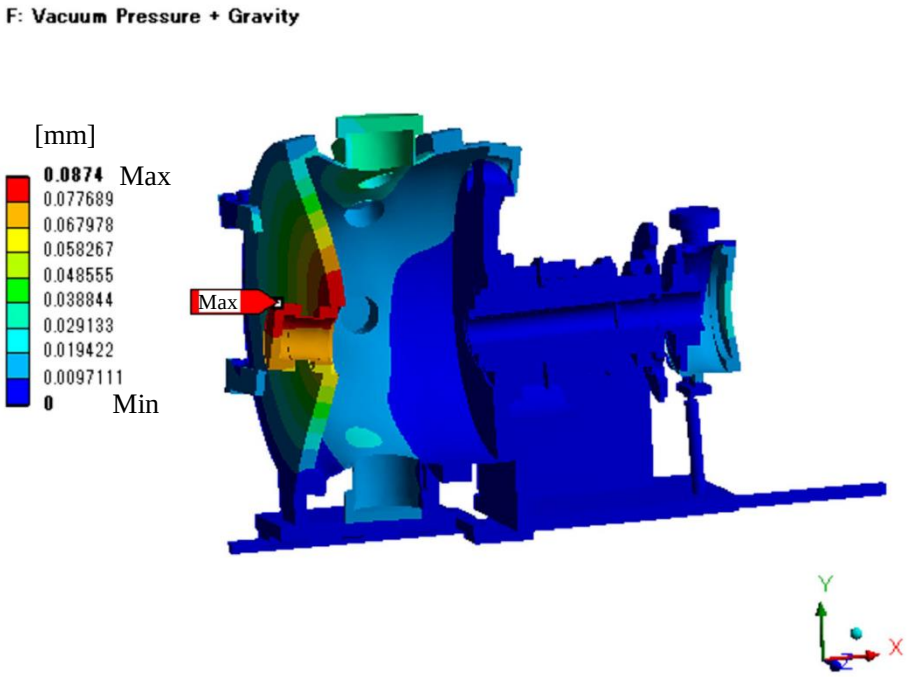

Fig. 4.1.2 Sectional view of total deformation profile

4.2 Stress profile – Vacuum condition

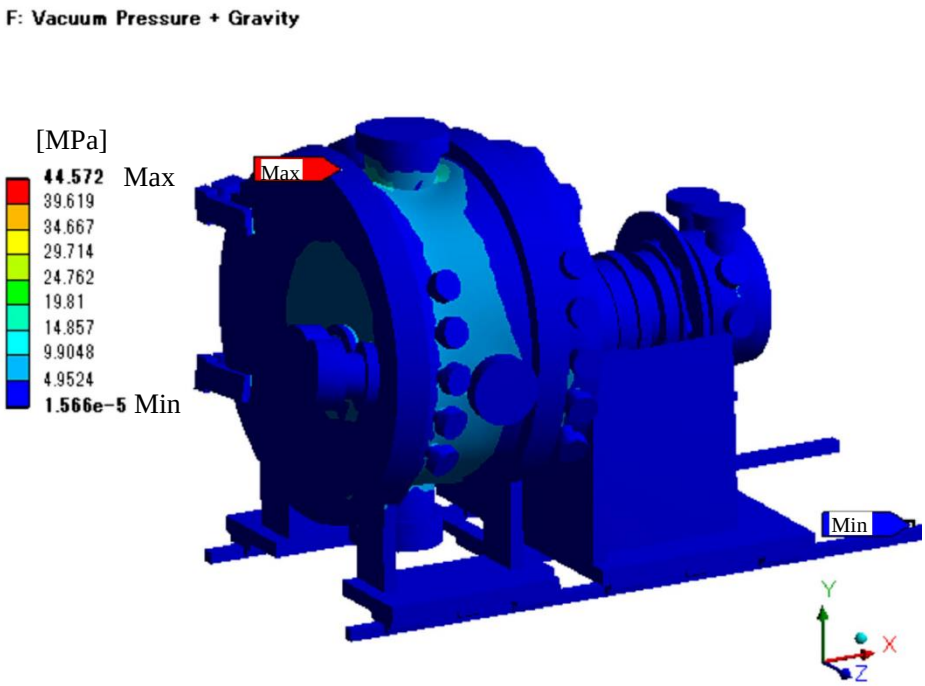

Fig. 4.2.1 Von Mises Stress profile

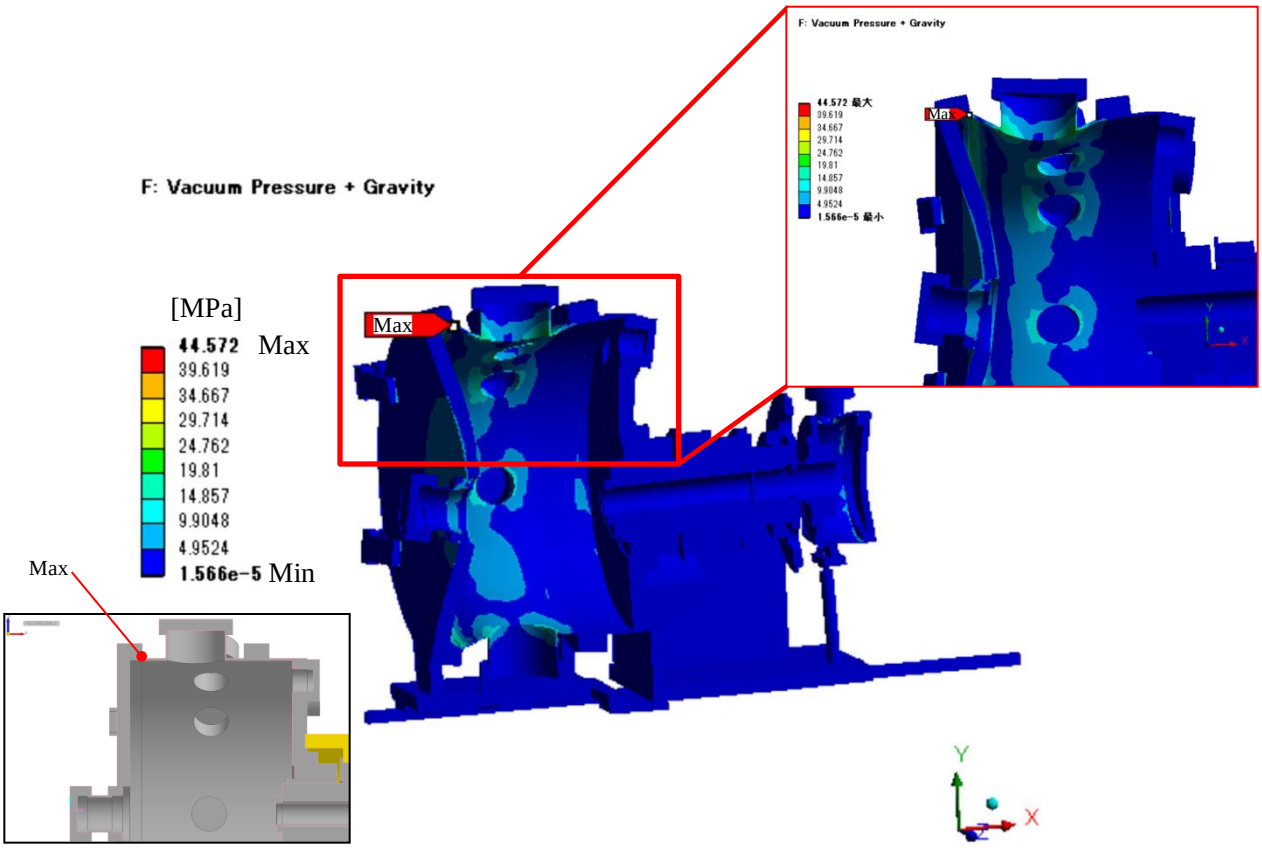

Fig. 4.2.2 Sectional view of Von Mises Stress profile

4.3 Elastic strain profile – Vacuum condition

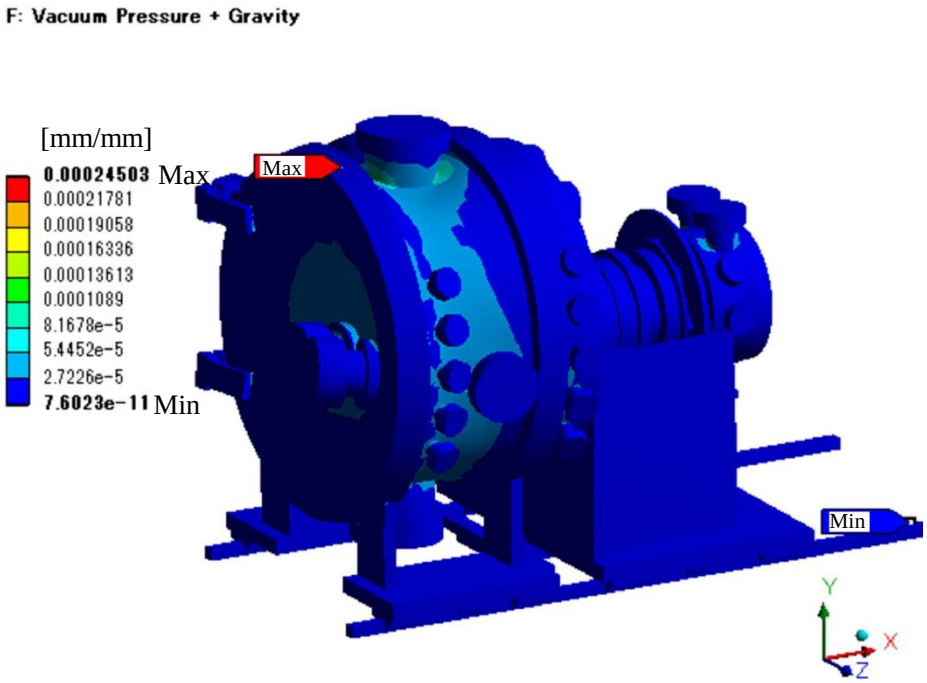

Fig. 4.3.1 Equivalent Elastic Strain profile

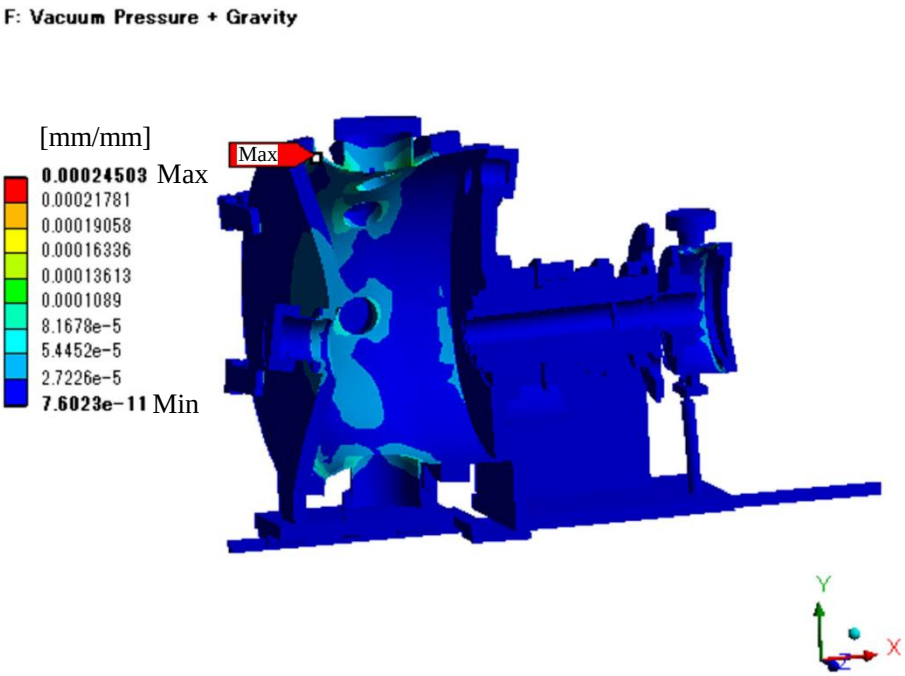

Fig. 4.3.2 Sectional view of Equivalent Elastic Strain profile

4. Calculation results

4.4 Deformation profile – High inner pressure condition - Bayonet room -

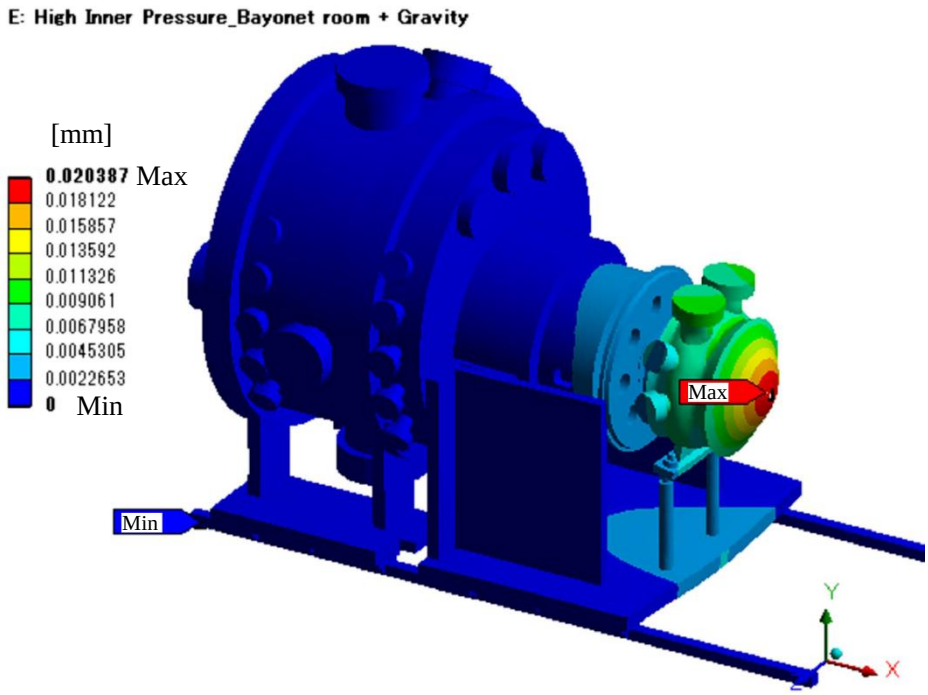

Fig. 4.4.1 Total deformation profile

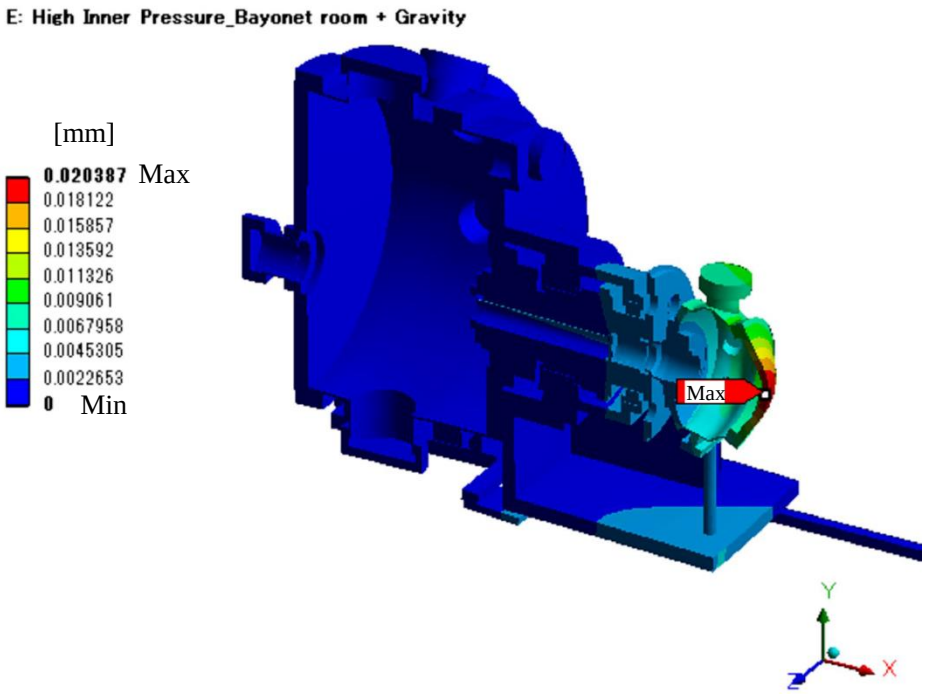

Fig. 4.4.2 Sectional view of total deformation profile

4.5 Stress profile – High inner pressure condition - Bayonet room -

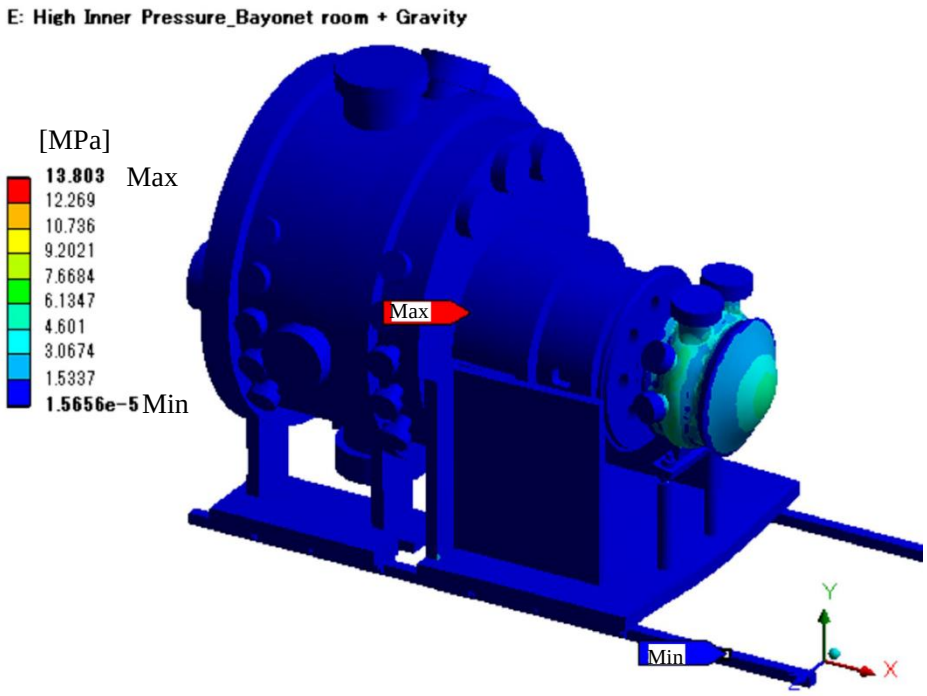

Fig. 4.5.1 Von Mises Stress profile

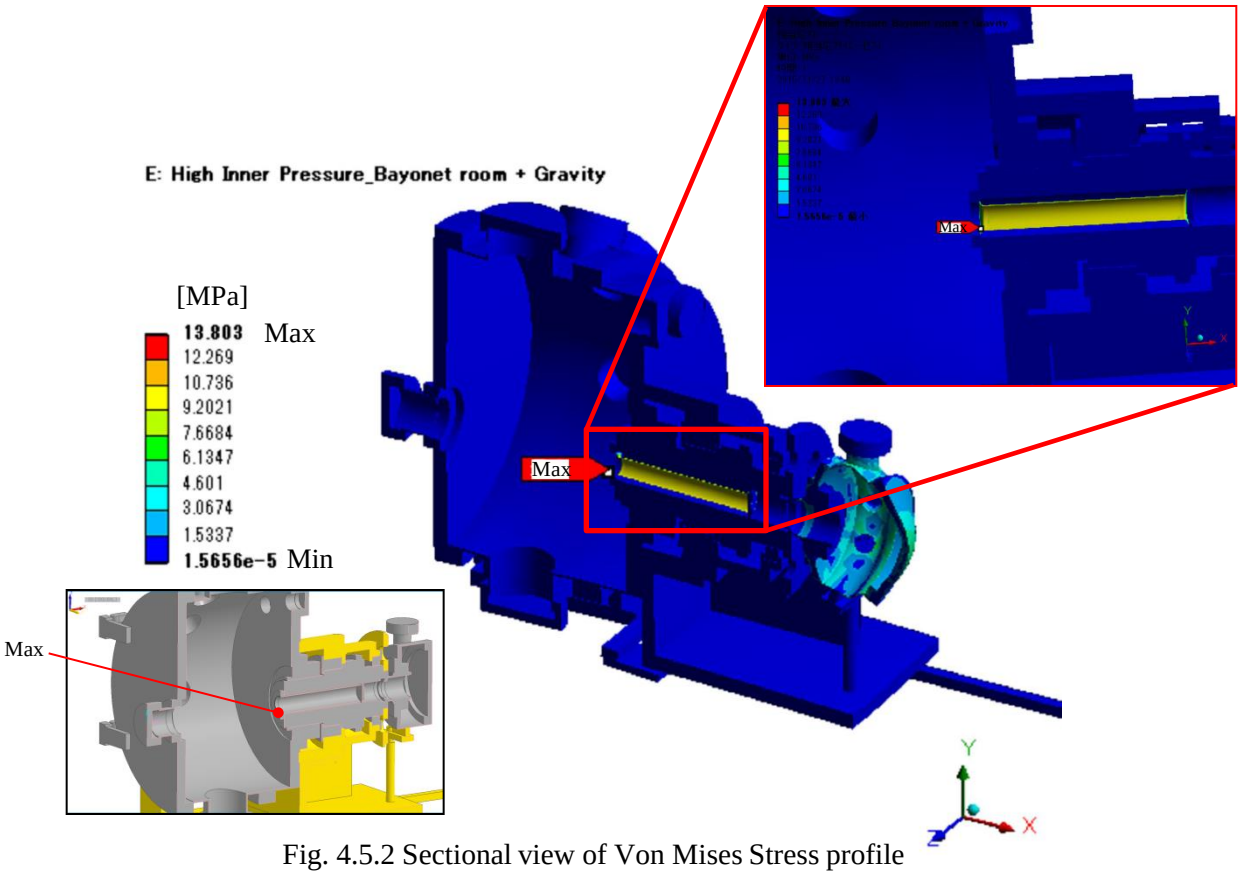

Fig. 4.5.2 Sectional view of Von Mises Stress profile

4.6 Elastic strain profile – High inner pressure condition - Bayonet room -

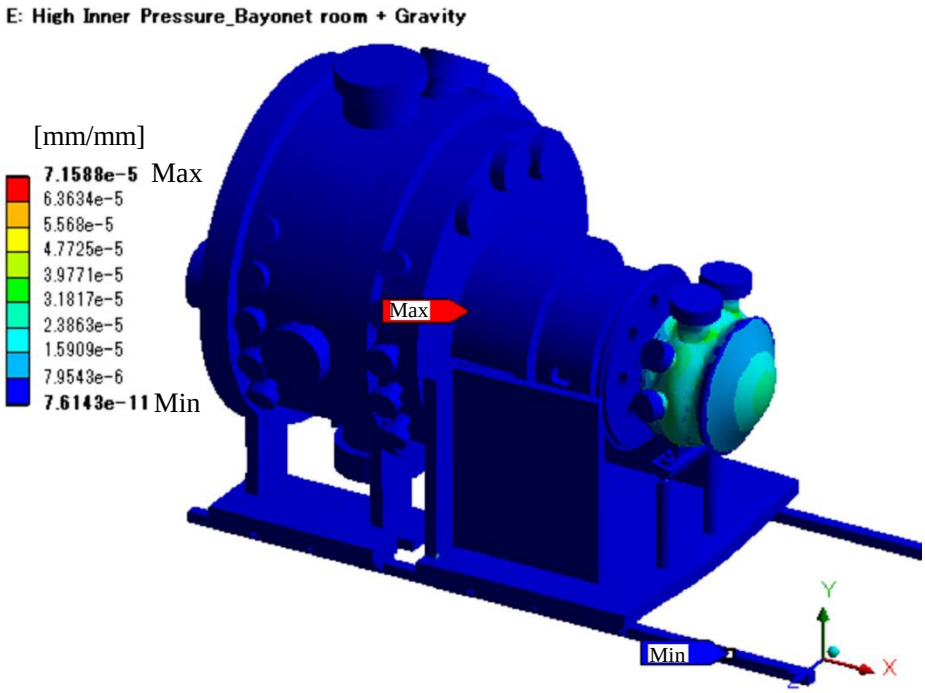

Fig. 4.6.1 Equivalent Elastic Strain profile

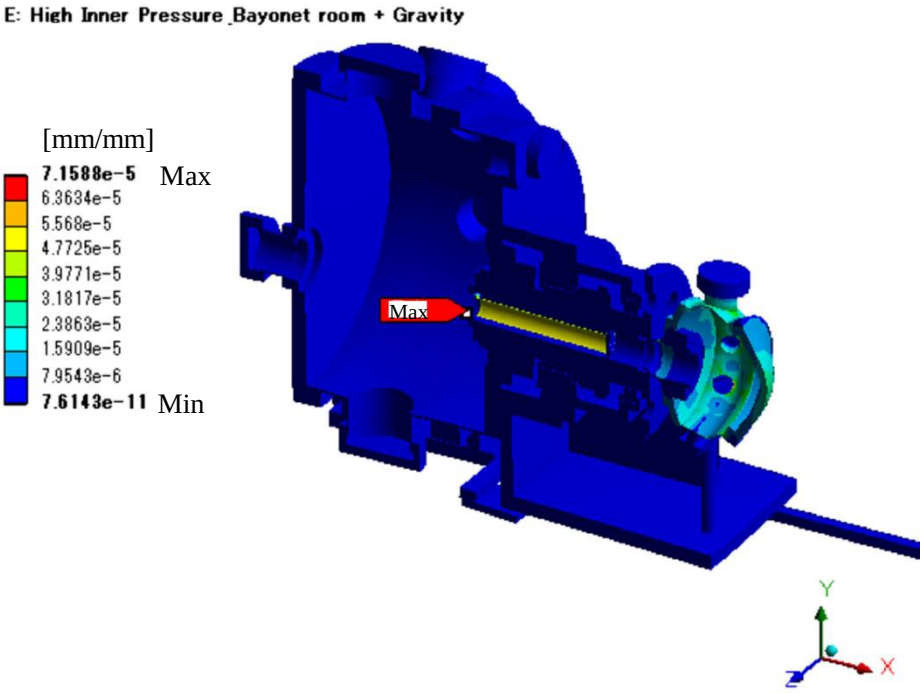

Fig. 4.6.2 Sectional view of Equivalent Elastic Strain profile

4. Calculation results

4.7 Deformation profile – High inner pressure condition - Crystal room -

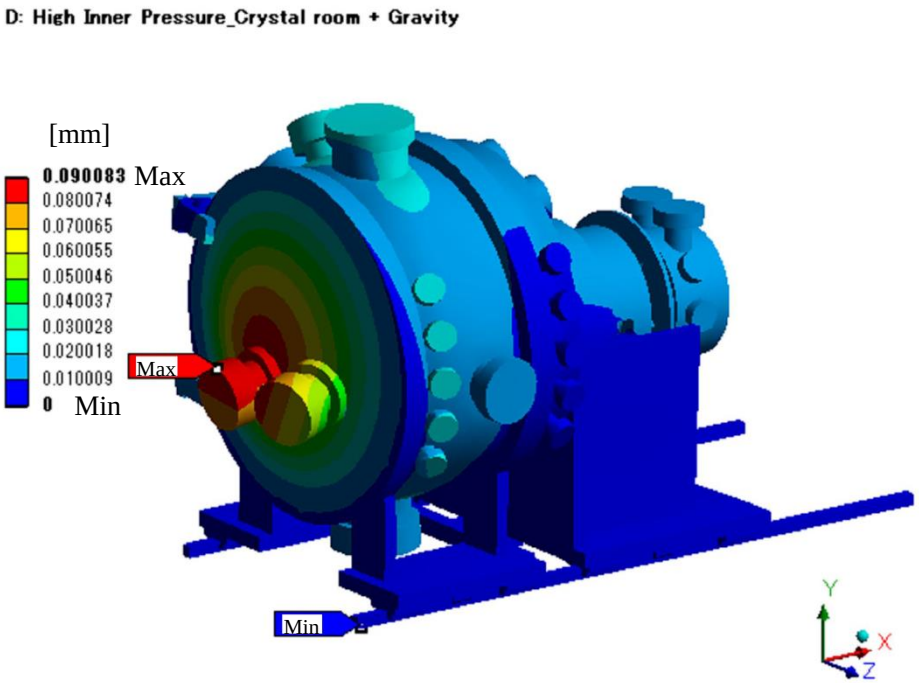

Fig. 4.7.1 Total deformation profile

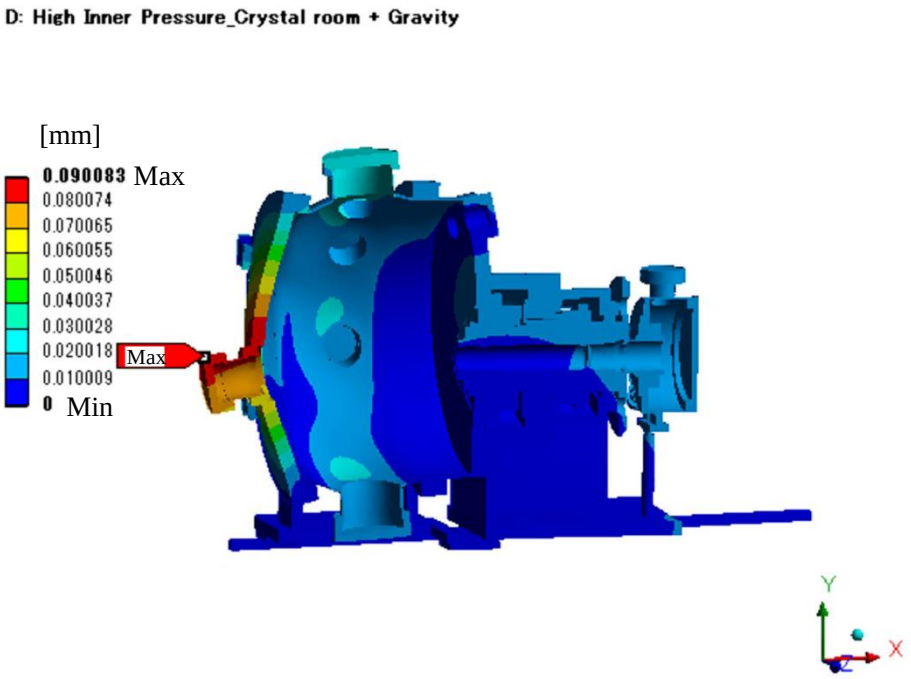

Fig. 4.7.2 Sectional view of total deformation profile

4.8 Stress profile – High inner pressure condition - Crystal room -

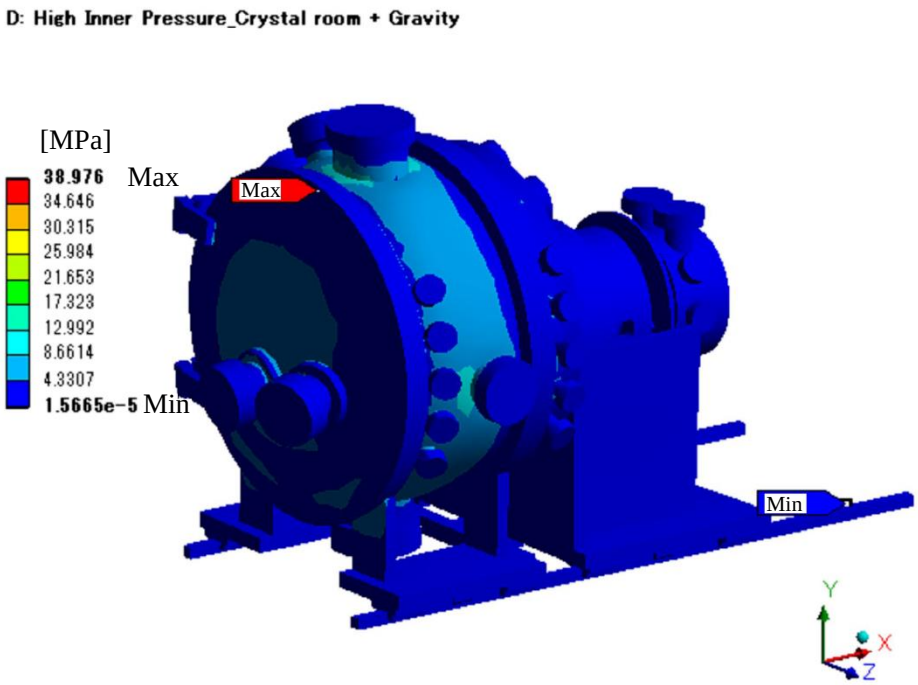

Fig. 4.8.1 Von Mises Stress profile

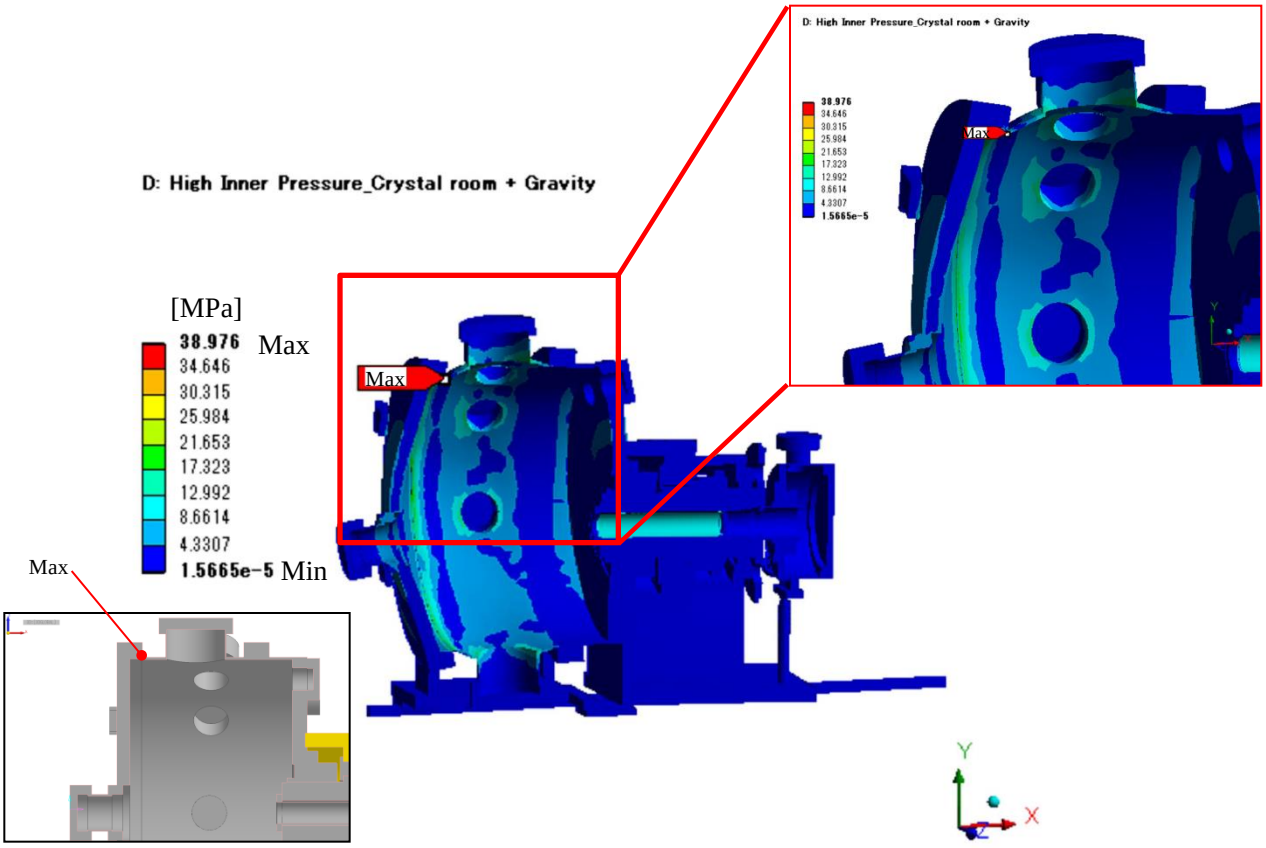

Fig. 4.8.2 Sectional view of Von Mises Stress profile

4.9 Elastic strain profile – High inner pressure condition - Crystal room -

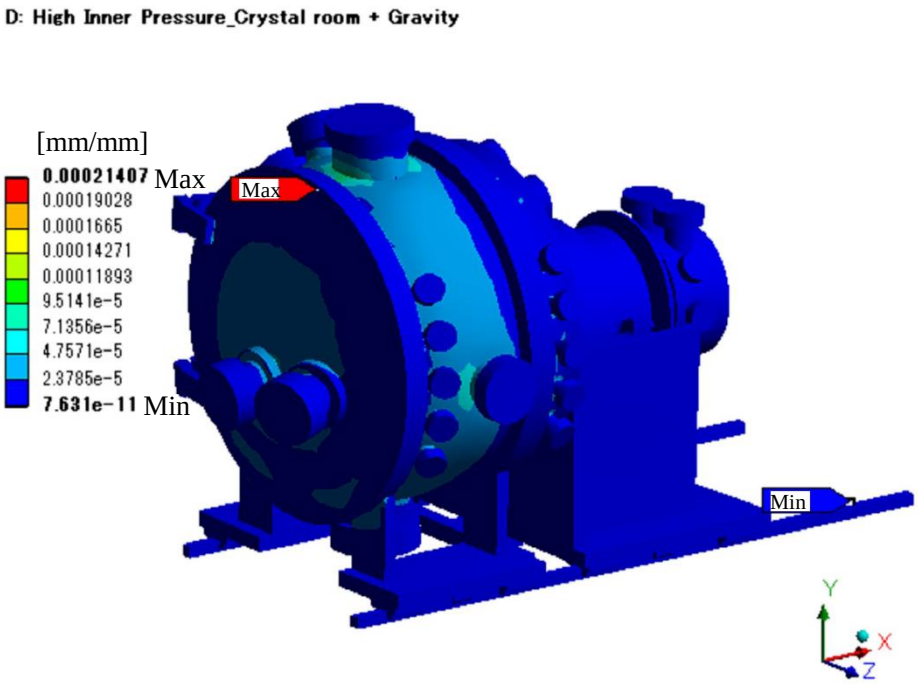

Fig. 4.9.1 Equivalent Elastic Strain profile

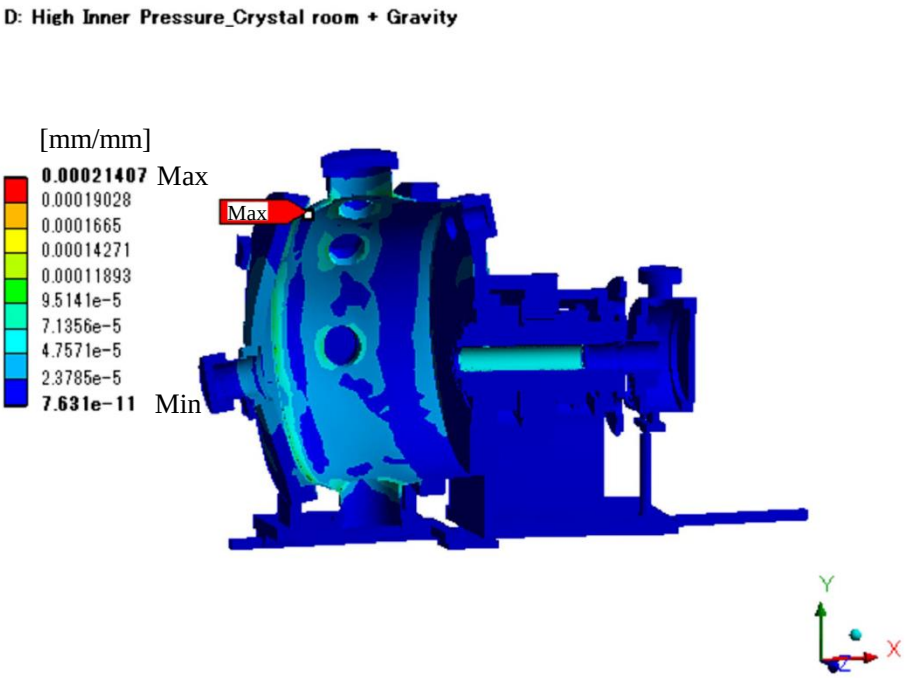

Fig. 4.9.2 Sectional view of Equivalent Elastic Strain profile

NSLS 2 FXI
Double Crystal Monochromator Vibration Analysis

- Eigenvalue analysis

TOYAMA Co., Ltd

Created by : Tsubota

Date : Nov. 26, 2015

1. Scope

This document covers the vibration analysis of the Double Crystal Monochromator(DCM) of FXI beamline at the NSLS 2 to evaluate the eigenvalue. The analysis was done with using Finite Element Analysis software ANSYS 16.0 Mechanical.

The analysis results are shown in Table 1. The analysis results show the first order vibration is 63.3 Hz, but it is not affect the crystal surface. Our analysis results showed the mode which affect the mirror surface was from mode 3.

Mode Number	Frequency [Hz]
mode 1	**63.3**
mode 2	**64.3**
mode 3	**98.2**
mode 4	**107.6**
mode 5	**124.3**
mode 6	**125.7**

Table 1. Analysis results

2. The analysis model

Fig. 2.1 and Fig. 2.2 show the analysis model.

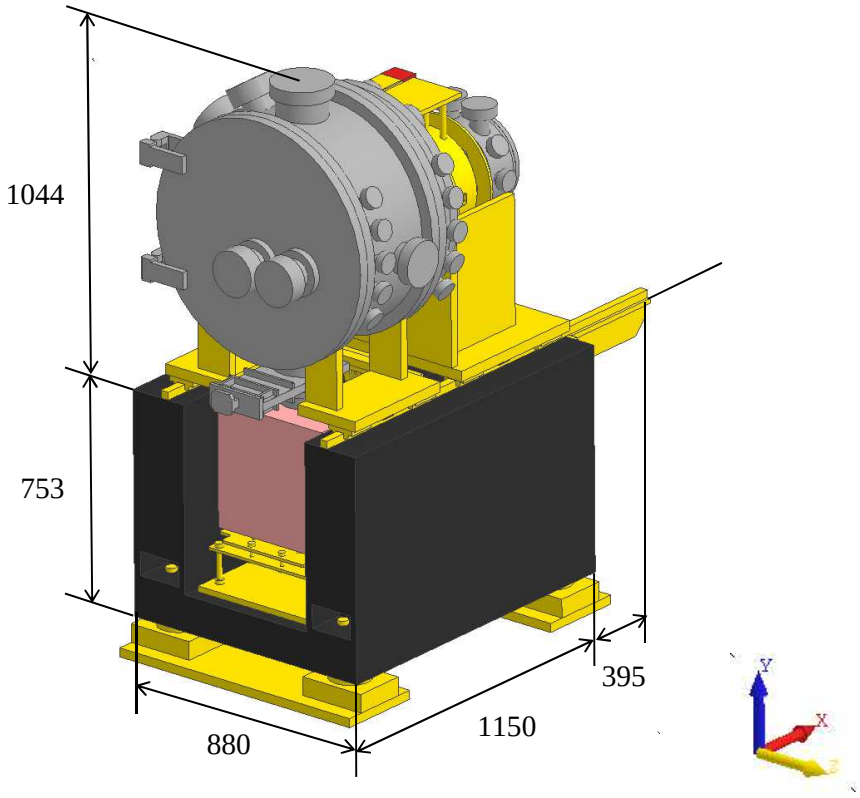

Fig. 2.1 Bird's eye view of DCM (Front view)

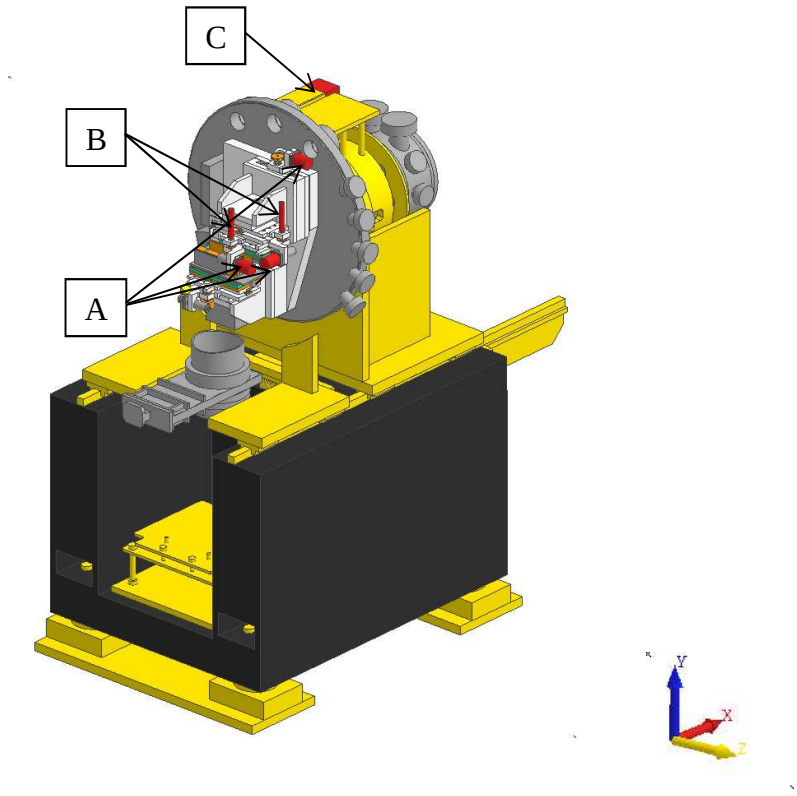

Fig. 2.2 Internal view of DCM

3. Physical properties of materials

Material	Density [kg/m^3]	Young's modulus [GPa]	Poisson's ratio	Color
Granite ※1	3000	128	0.13	Black
SUS304	7930	193	0.31	Grey
Silicon	2330	165	0.26	Blue
Steel	7900	206	0.30	Yellow
Copper	8830	110	0.33	Orange
Motor	※2	193	0.31	Red
Aluminum	2690	71	0.33	White

Table 3.1 Physical Properties of materials

※1 Granite

The physical properties of granite is cited from the data sheet of sekigahara seisakujo.

※2 Motor

Table 3.2 show the each motor weight. The density of each motor in Fig 2.2 is adjusted to match these values.

Motor	A	B	C
Mass [kg]	0.60	0.16	1.7

Table 3.2 The weight of the motors

4. Analysis Conditions

Fig. 4.1 and Fig. 4.2 show the support boundary condition and mesh model used for analysis.

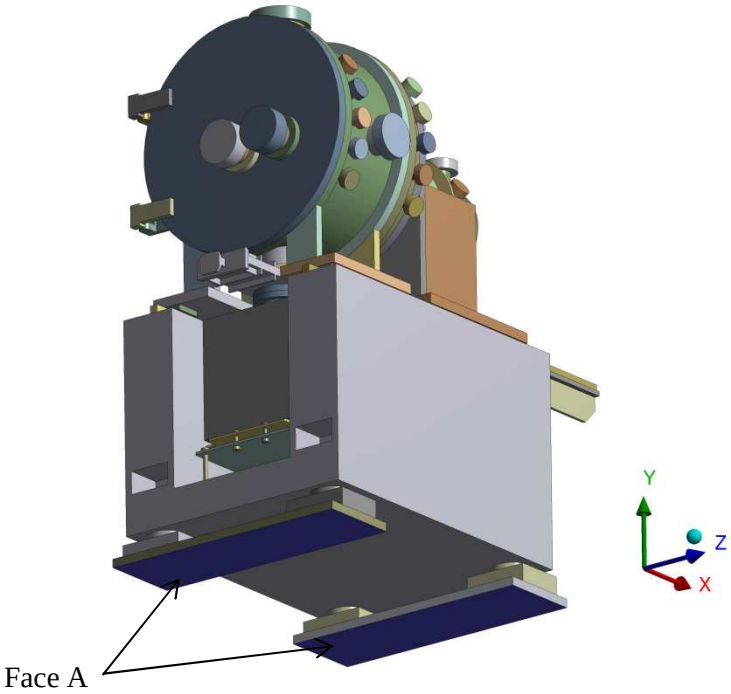

Face A (Fixed Support : X, Y, Z Fixed)

Fig. 4.1 Support boundary condition

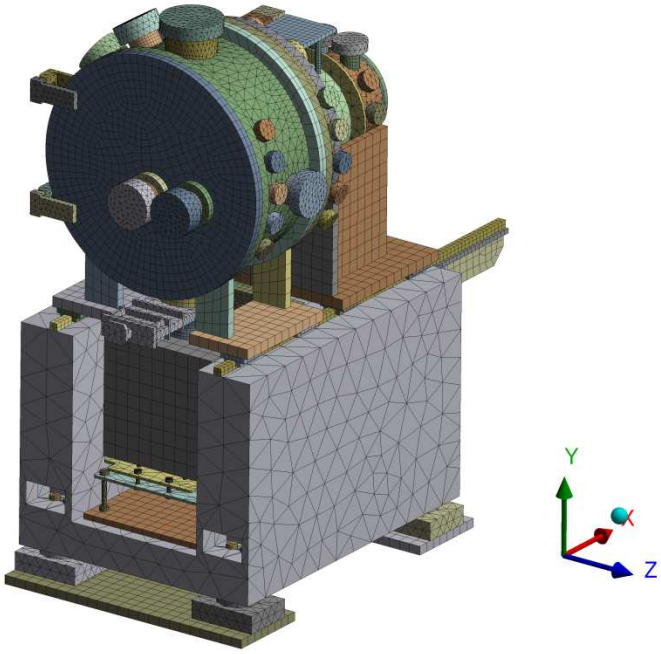

Fig. 4.2 Mesh model

5.1 Analsysi Results Summary

Axis	Mode	Frequency [Hz]	Participation Factor	Participation Factor Ratio	Effective Mass	Cumulative Mass Fraction
X	1	63.3	0.394	0.482	0.155440	0.151741
	2	64.3	0.001	0.001	0.000001	0.151741
	3	98.2	-0.040	0.049	0.001619	0.153322
	4	107.6	0.350	0.428	0.122393	0.272801
	5	124.3	0.818	**1.000**	0.669659	0.926522
	6	125.7	-0.274	0.335	0.075269	**1.000000**
Y	1	63.3	-0.019	0.043	0.000353	0.001760
	2	64.3	0.002	0.004	0.000003	0.001775
	3	98.2	-0.053	0.121	0.002854	0.016010
	4	107.6	0.441	**1.000**	0.194520	0.986073
	5	124.3	-0.046	0.105	0.002148	0.996785
	6	125.7	0.025	0.058	0.000645	**1.000000**
Z	1	63.3	-0.001	0.001	0.000001	0.000001
	2	64.3	0.395	0.366	0.156226	0.106643
	3	98.2	-0.158	0.146	0.024947	0.123671
	4	107.6	-0.005	0.005	0.000029	0.123691
	5	124.3	0.343	0.318	0.117920	0.204185
	6	125.7	1.080	**1.000**	1.165830	**1.000000**
ROT-X	1	63.3	0.896	0.003	0.802952	0.000008
	2	64.3	**-313.480**	**1.000**	**98266.800000**	0.927243
	3	98.2	**13.717**	0.044	188.158000	0.929019
	4	107.6	2.501	0.008	6.252470	0.929078
	5	124.3	-24.491	0.078	599.817000	0.934738
	6	125.7	-83.165	0.265	**6916.380000**	**1.000000**
ROT-Y	1	63.3	-0.307	0.001	0.094032	0.000001
	2	64.3	11.279	0.036	127.221000	0.001111
	3	98.2	11.954	0.038	142.898000	0.002357
	4	107.6	-7.417	0.024	55.004100	0.002837
	5	124.3	**-121.930**	0.387	**14866.300000**	0.132539
	6	125.7	**-315.320**	**1.000**	**99427.700000**	**1.000000**
ROT-Z	1	63.3	**311.590**	**1.000**	**97088.300000**	0.986261
	2	64.3	0.870	0.003	0.757149	0.986269
	3	98.2	6.112	0.020	37.355400	0.986648
	4	107.6	-11.365	0.036	129.155000	0.987960
	5	124.3	-31.260	0.100	977.159000	0.997887
	6	125.7	**14.424**	0.046	208.039000	**1.000000**

Table 5.1 Results Summary

5.2. Analysis Results

5.2.1 Mode_1 : Eigenvalue = 63.3 Hz

Fig. 5.2.1 shows the total deformation of mode 1. The analysis results value written in Fig. 5.2.1 indicate a relative value, so it has no physical meaning. Table 5.2.1 shows the detail of the vibration analysis results. Participation Factor and Effective Mass for each axis are shown in Table 5.2.1.

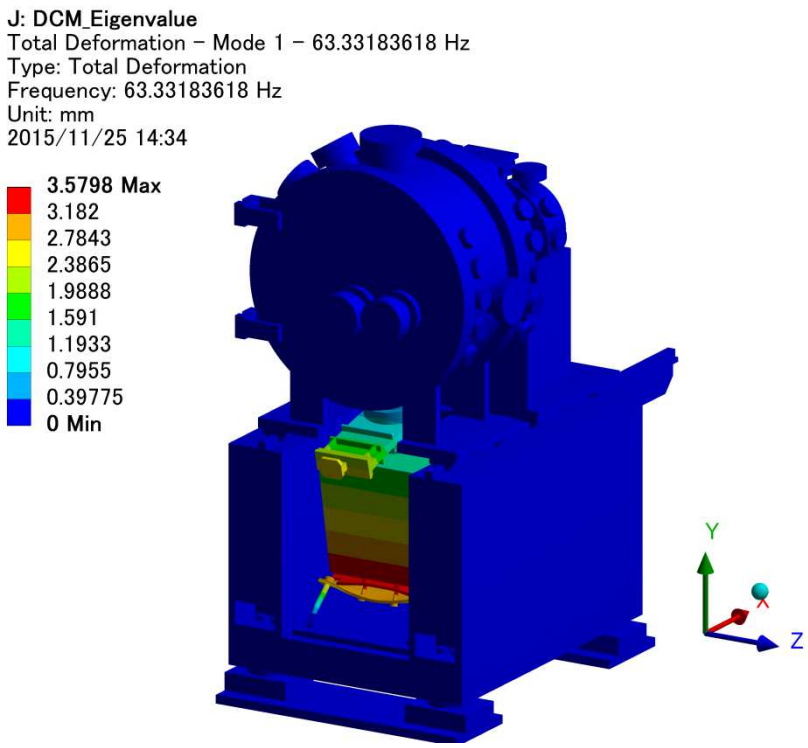

Fig. 5.2.1 Total deformation of mode 1

Axis	Participation Factor	Participation Factor Ratio	Effective Mass
X	0.394	0.482	0.155440
Y	-0.019	0.043	0.000353
Z	-0.001	0.001	0.000001
ROT-X	0.896	0.003	0.802952
ROT-Y	-0.307	0.001	0.094032
ROT-Z	**311.590**	**1.000**	**97088.300000**

Table 5.2.1 Detail of the mode 1

5.2.2 Mode_2 : Eigenvalue = 64.3 Hz

Fig. 5.2.2 shows the total deformation of mode 2. The analysis results value written in Fig. 5.2.2 indicate a relative value, so it has no physical meaning. Table 5.2.2 shows the detail of the vibration analysis results. Participation Factor and Effective Mass for each axis are shown in Table 5.2.2.

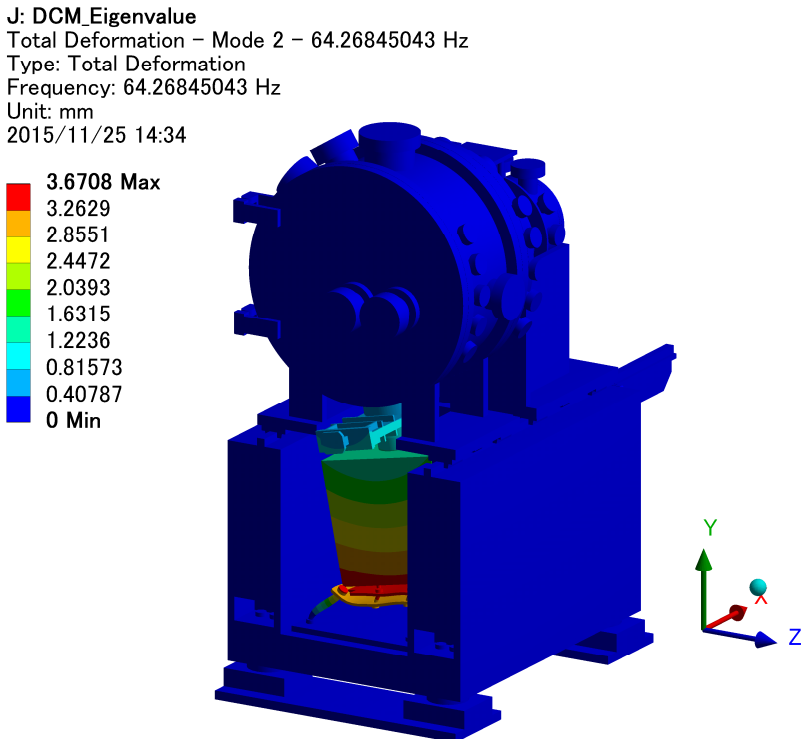

Fig. 5.2.2 Total deformation of mode 2

Axis	Participation Factor	Participation Factor Ratio	Effective Mass
X	0.001	0.001	0.000001
Y	0.002	0.004	0.000003
Z	0.395	0.366	0.156226
ROT-X	**-313.480**	**1.000**	**98266.800000**
ROT-Y	11.279	0.036	127.221000
ROT-Z	0.870	0.003	0.757149

Table 5.2.2 Detail of the mode 2

5.2.3 Mode_3 : Eigenvalue = 98.2 Hz

Fig. 5.2.3 shows the total deformation of mode 3. The analysis results value written in Fig. 5.2.3 indicate a relative value, so it has no physical meaning. Table 5.2.3 shows the detail of the vibration analysis results. Participation Factor and Effective Mass for each axis are shown in Table 5.2.3.

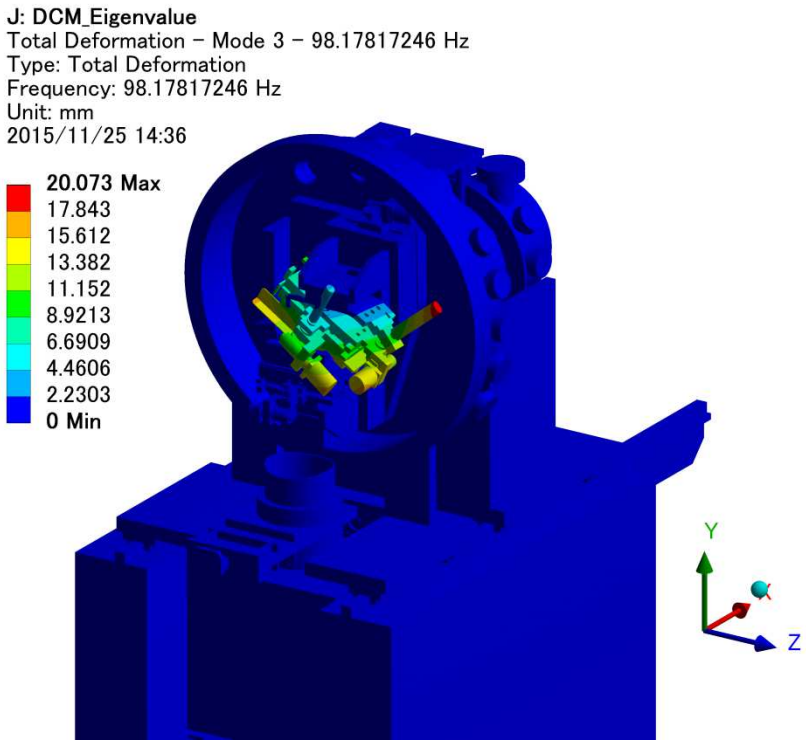

Fig. 5.2.3 Total deformation of mode 3

Axis	Participation Factor	Participation Factor Ratio	Effective Mass
X	-0.040	0.049	0.001619
Y	-0.053	0.121	0.002854
Z	-0.158	0.146	0.024947
ROT-X	**13.717**	0.044	188.158000
ROT-Y	11.954	0.038	142.898000
ROT-Z	6.112	0.020	37.355400

Table 5.2.3 Detail of the mode 3

5.2.4 Mode_4 : Eigenvalue = 107.6 Hz

Fig. 5.2.4 shows the total deformation of mode 4. The analysis results value written in Fig. 5.2.4 indicate a relative value, so it has no physical meaning. Table 5.2.4 shows the detail of the vibration analysis results. Participation Factor and Effective Mass for each axis are shown in Table 5.2.4.

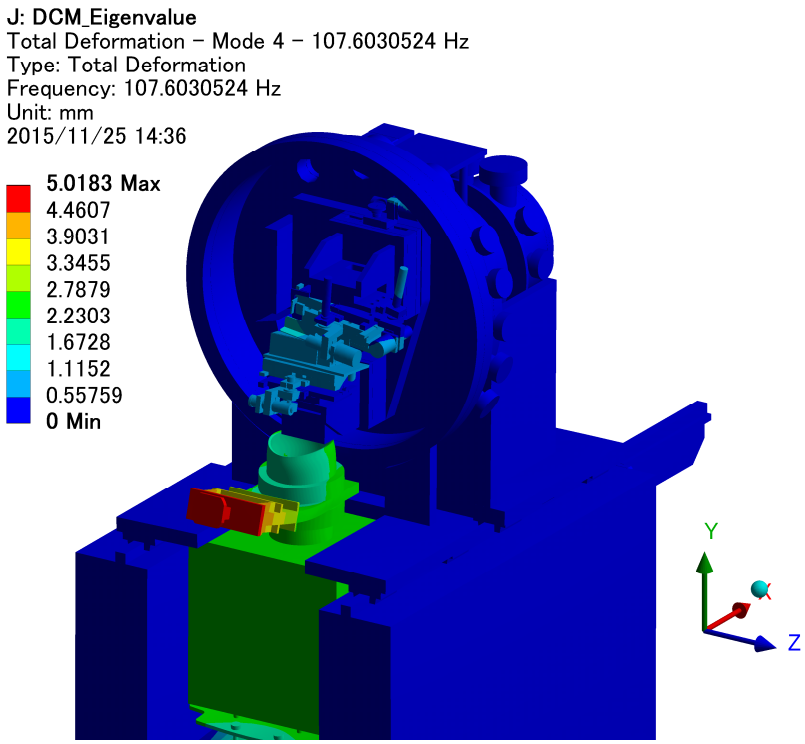

Fig. 5.2.4 Total deformation of mode 4

Axis	Participation Factor	Participation Factor Ratio	Effective Mass
X	0.350	0.428	0.122393
Y	0.441	**1.000**	0.194520
Z	-0.005	0.005	0.000029
ROT-X	2.501	0.008	6.252470
ROT-Y	-7.417	0.024	55.004100
ROT-Z	-11.365	0.036	129.155000

Table 5.2.4 Detail of the mode 4

5.2.5 Mode_5 : Eigenvalue = 124.3 Hz

Fig. 5.2.5 shows the total deformation of mode 5. The analysis results value written in Fig. 5.2.5 indicate a relative value, so it has no physical meaning. Table 5.2.5 shows the detail of the vibration analysis results. Participation Factor and Effective Mass for each axis are shown in Table 5.2.5.

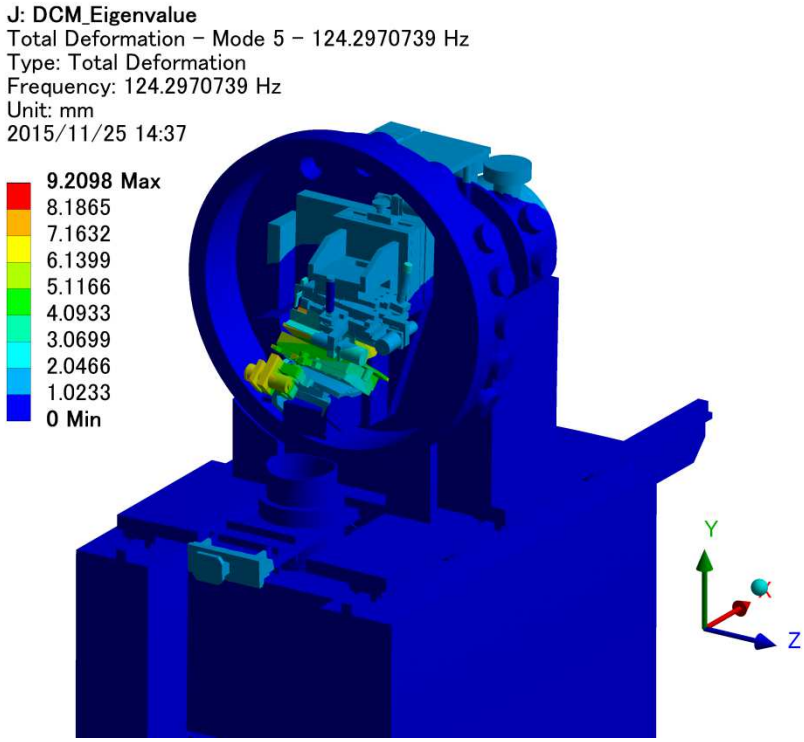

Fig. 5.2.5 Total deformation of mode 5

Axis	Participation Factor	Participation Factor Ratio	Effective Mass
X	0.818	**1.000**	0.669659
Y	-0.046	0.105	0.002148
Z	0.343	0.318	0.117920
ROT-X	-24.491	0.078	599.817000
ROT-Y	**-121.930**	0.387	**14866.300000**
ROT-Z	-31.260	0.100	977.159000

Table 5.2.5 Detail of the mode 5

5.2.6 Mode_6 : Eigenvalue = 125.7 Hz

Fig. 5.2.6 shows the total deformation of mode 6. The analysis results value written in Fig. 5.2.6 indicate a relative value, so it has no physical meaning. Table 5.2.6 shows the detail of the vibration analysis results. Participation Factor and Effective Mass for each axis are shown in Table 5.2.6.

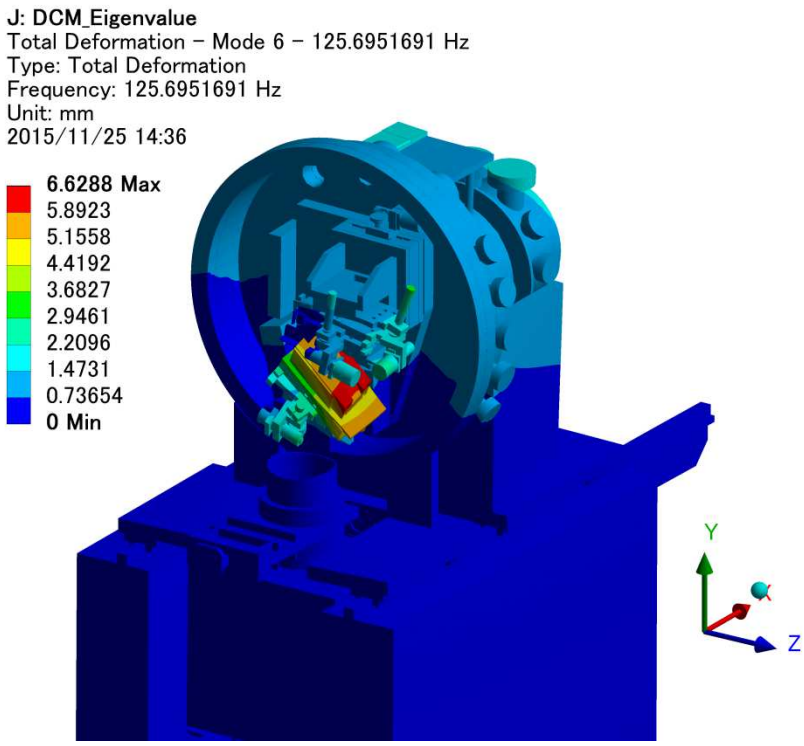

Fig. 5.2.6 Total deformation of mode 6

Axis	Participation Factor	Participation Factor Ratio	Effective Mass
X	-0.274	0.335	0.075269
Y	0.025	0.058	0.000645
Z	1.080	**1.000**	1.165830
ROT-X	-83.165	0.265	**6916.380000**
ROT-Y	**-315.320**	**1.000**	**99427.700000**
ROT-Z	**14.424**	0.046	208.039000

Table 5.2.6 Detail of the mode 6

NSLS 2 FXI PMFS

Thermo-Structural analysis

- CVD diamond 0.5 mm
- Pink Beam irradiation

TOYAMA Co., Ltd

Date : Nov. 6, 2015

Created by : Tsubota

1. Scope

We have performed thermo-structural analysis of the Pink and Monochromatic beam Fluorescent Screen(PMFS) of NSLS 2 FXI beamline to evaluate the temperature, deformation, stress and strain profiles. In this report, we have assumed the situation that the pink beam irradiates the PMFS. The calculation was done by using ANSYS 16.0 Mechanical.

The analysis conditions are listed in Table 1.1. These values are cited from the Technical Specification(NX-C-SPC-FXI-PDS-001). The more detail of the analysis conditions are written in Page 3.

Table 1.2 shows the analysis results.

	Analysis conditions	
Total Absorbed Power	**733**	W
Distance from the source	**35.2**	m
Incident Beam	**H × V = 0.21** mrad × **0.21** mrad	

Table 1.1 Analysis conditions

	Results	
Maximum Temperature	**528**	℃
Cooling pipe Temperature	**86.7**	℃
Von Mises Stress (CVD diamond)	**550**	MPa
Equivalent Elastic Strain (CVD diamond)	**0.0052**	%
Substrate material	**CVD diamond (30 × 66 × 0.5)**	

* Tensile strength 600 MPa : Optical grade CVD-diamond catalogue data by Diamond Materials

Table 1.2 Results Summary

2. Dimensional drawing

Please see the dimensional drawing of the PMFS. The analysis was done by using these simplified model

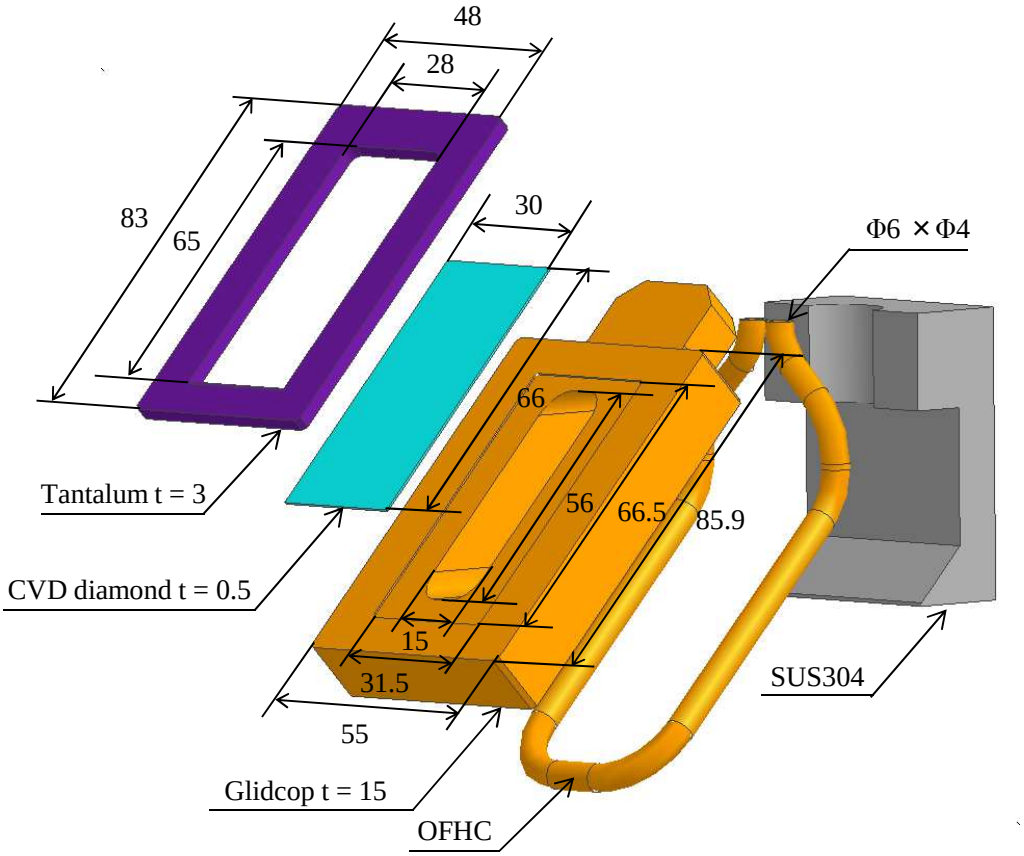

Fig. 2.1 Bird's eye view

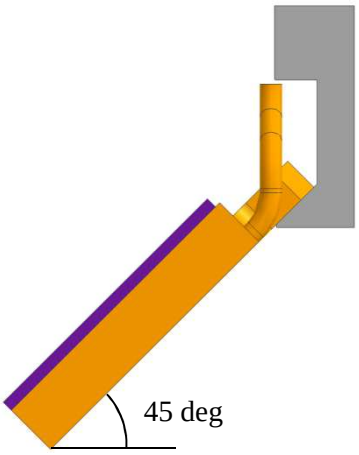

Fig. 2.2 Side view of PMFS

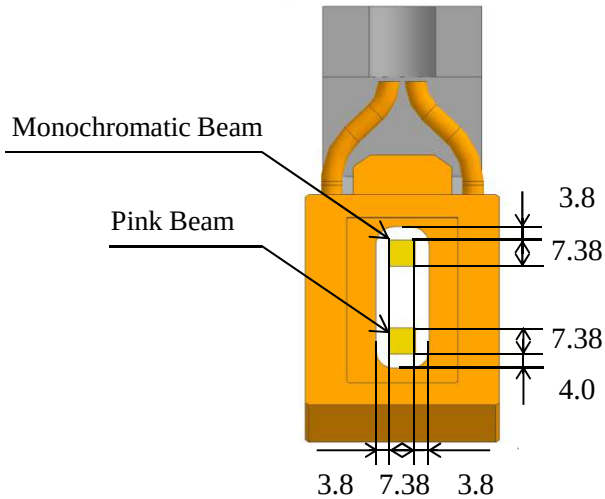

Fig. 2.3 Front view of PMFS

3. Boundary conditions

3.1 For thermal analysis

The green area in Fig. 3.1.1 shows the heat input position. We assumed all the pink beam irradiates the PMFS. The yellow surface in Fig. 3.1.2 shows the convection surface. Table 3.1 show the boundary conditions for thermal analysis. We assumed that the thermal contact conductance is enhanced by inserting Ag sheet between Glidcop and CVD diamond.

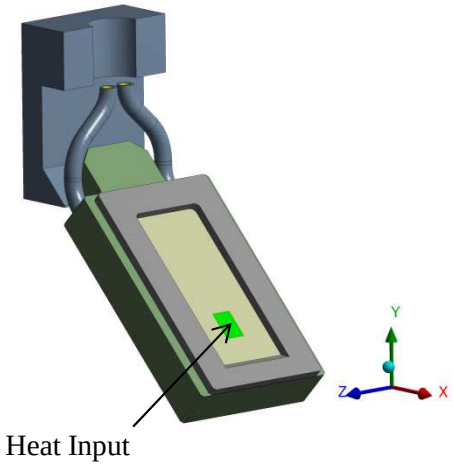

Fig. 3.1.1 Heat input area

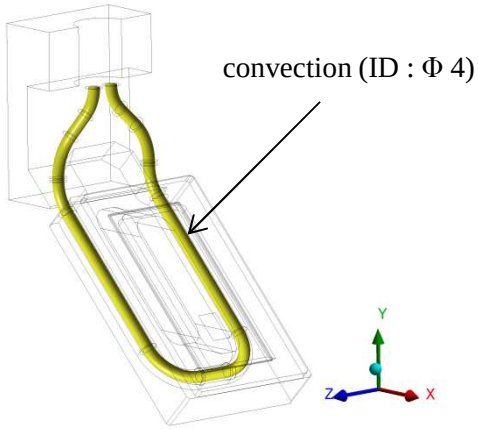

Fig. 3.1.2 convection surface

	Analysis Conditions	
Cooling Water temperature	**29.5**	℃
Absorbed power (CVD diamond)	**733**	W
Maximum heat flux	**10.1**	W/mm^2
Inclined angle	**45**	degrees
Distance from the source	**35.2**	m
Incident Beam	**H × V = 0.21 mrad × 0.21 mrad**	
Convection coefficient	**10000**	W/m^2・K
Flow rate	**1.5**	L/min
Flow velocity	**2.0**	m/s
Pipe inner diameter	**4**	mm
Pressure Loss	**0.051**	MPa
Thermal contact conductance between Glidcop and CVD diamond	**10000**	W/m^2・K

Table 3.1 Analysis Conditions

3. Boundary conditions

3.2 For Static structural analysis

Fig. 3.2 shows the support boundary conditions. The static analysis was done by using CVD diamond only. All boundary conditions for static structural analysis is shown in Table 3.2.

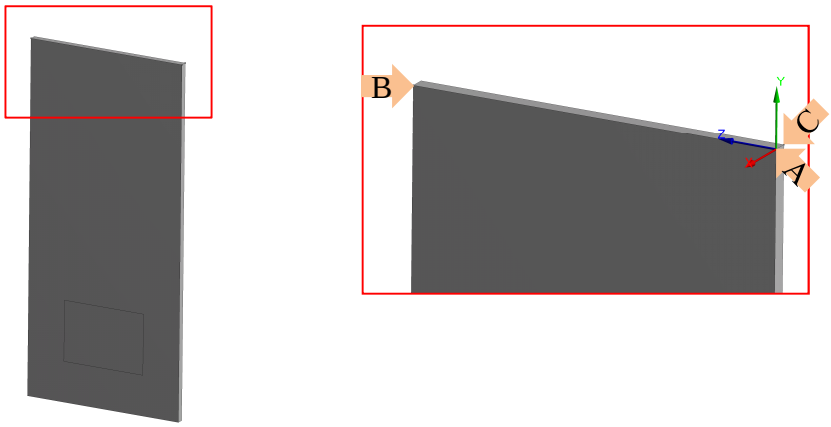

Fig. 3.2 Support Points

	Analysis Conditions	
Point A	**Fixed : X, Y, Z Axis**	
Point B	**Fixed : X, Y Axis**	**Free : Z Axis**
Point C	**Fixed : Y Axis**	**Free : X, Z Axis**
Reference temperature	**71.5**	℃

* The reference temperature was defined from the minimum temperature of CVD diamond.

Table.3.2 Support boundary conditions

3.3 Mesh model

Fig. 3.3 shows the mesh model used for analysis.

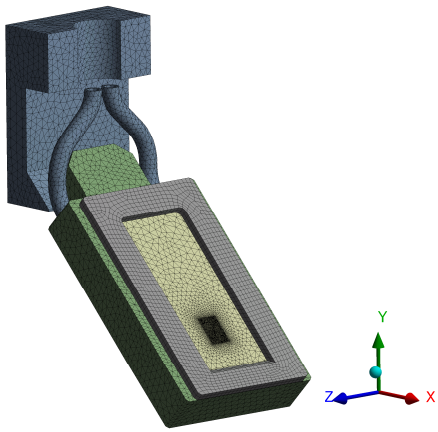

Fig. 3.3 Mesh model

3. Boundary conditions

3.4 Physical properties of materials

Table 3.4 shows the physical properties of materials used for analysis.

	Density [kg/m^3]	Young's modulus [Pa]	Poisson's ratio	Thermal Expansion [1/K]	Thermal Conductivity [W/m・K]	Tensile Strength [MPa]
OFHC	8940	1.18E+11	0.34	1.65E-05	389	-
CVD diamond	3515	1.05E+12	0.1	Fig. 3.4	Fig. 3.4	600
Tantalum	16690	1.86E+11	0.34	6.3 E-06	57.5	-
SUS304	7930	1.93E+11	0.31	1.55E-05	15.3	-

Table 3.4 Physical properties of materials

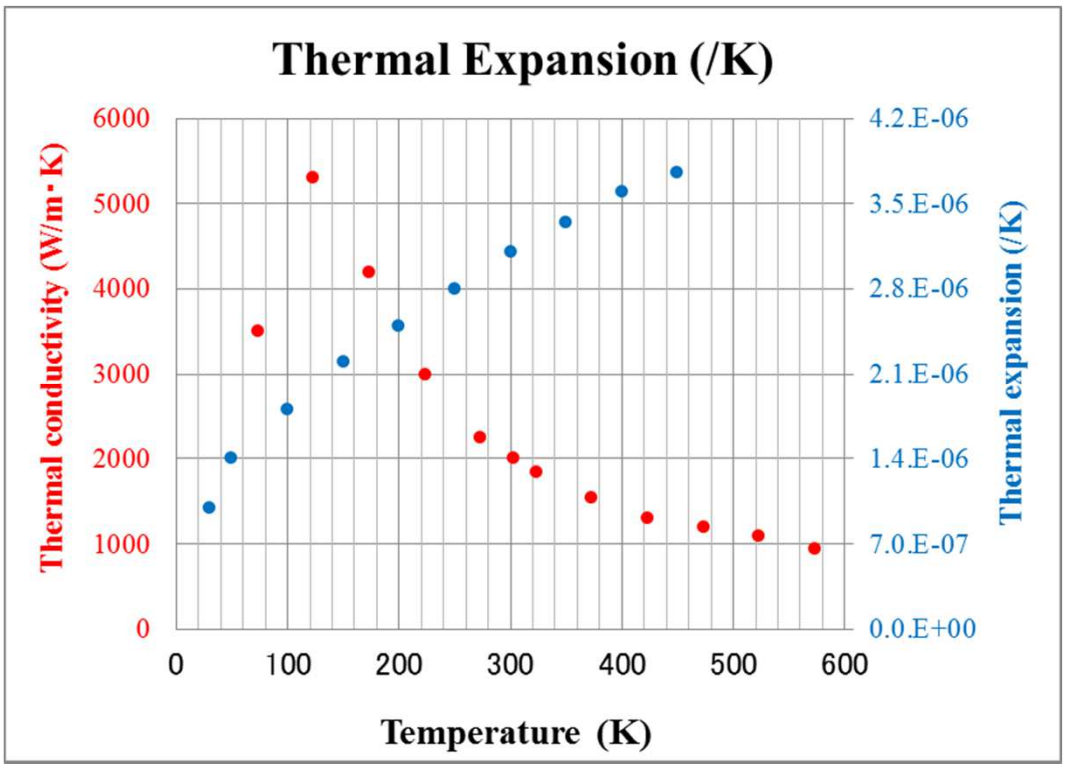

Fig 3.4 Thermal conductivity and thermal expansion of CVD diamond

3. Boundary conditions

3.5 Power map calculation

The power map calculation was done by using SPECTRA* software. The Fig. 3.5 shows the power map which applied for analysis. We assumed some of the synchrotron light is absorbed in PMFS. Table 3.5 shows the heat balance sheet.

* : T. Tanaka and H. Kitamura, J. Synchrotron Radiation 8 (2001) 1221.
Email : ztanaka@spring8.or.jp
URL : http://radiant.harima.riken.go.jp/spectra/index.html

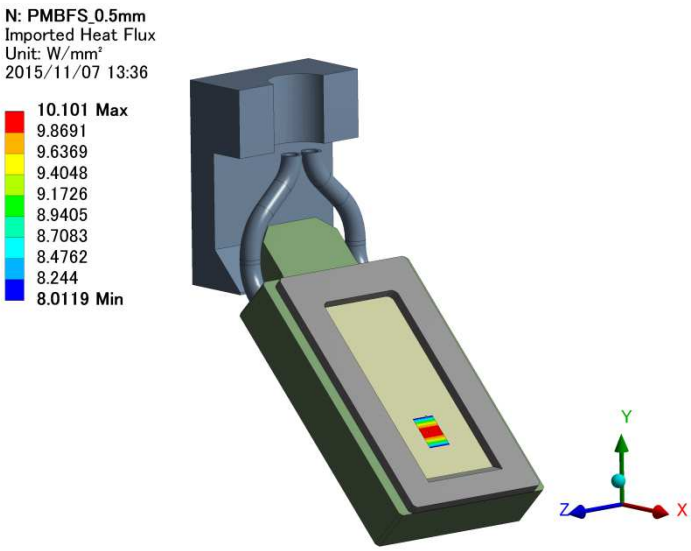

Fig. 3.5 Bird's eye view of absorbed power map

Total power calculation		
Total power	**1906**	W
Absorbed power in CVD diamond	**733**	W

Table 3.5 Heat balance sheet

4. Calculation results

4.1 Temperature profile

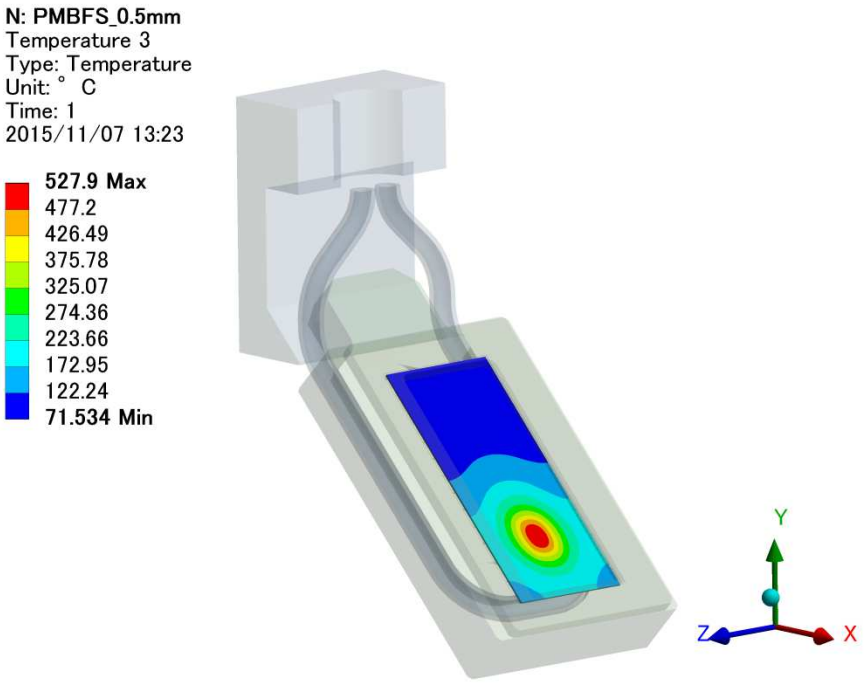

Fig. 4.1.1 Temperature profile of diamond

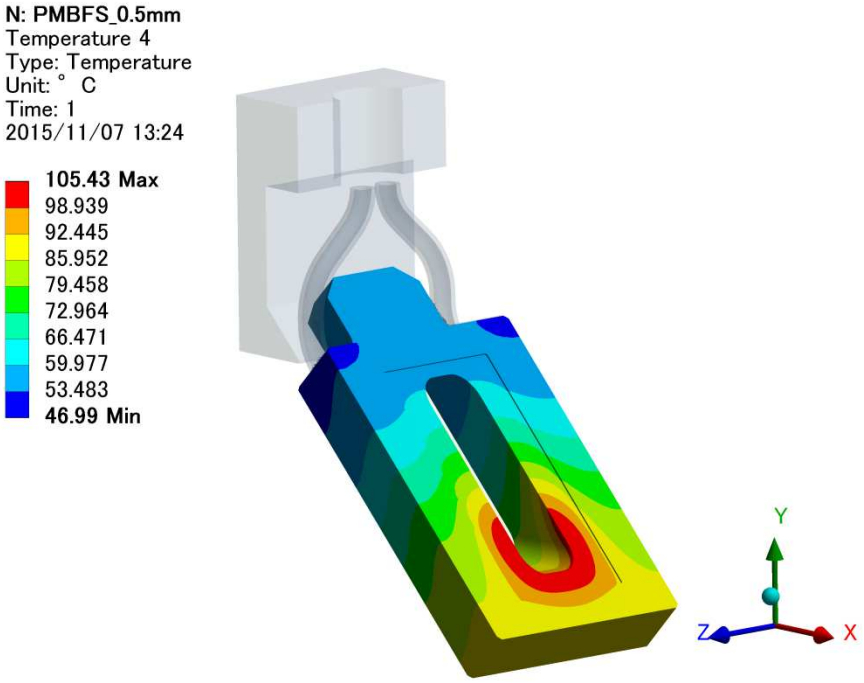

Fig. 4.1.2 Temperature profile of Glidcop

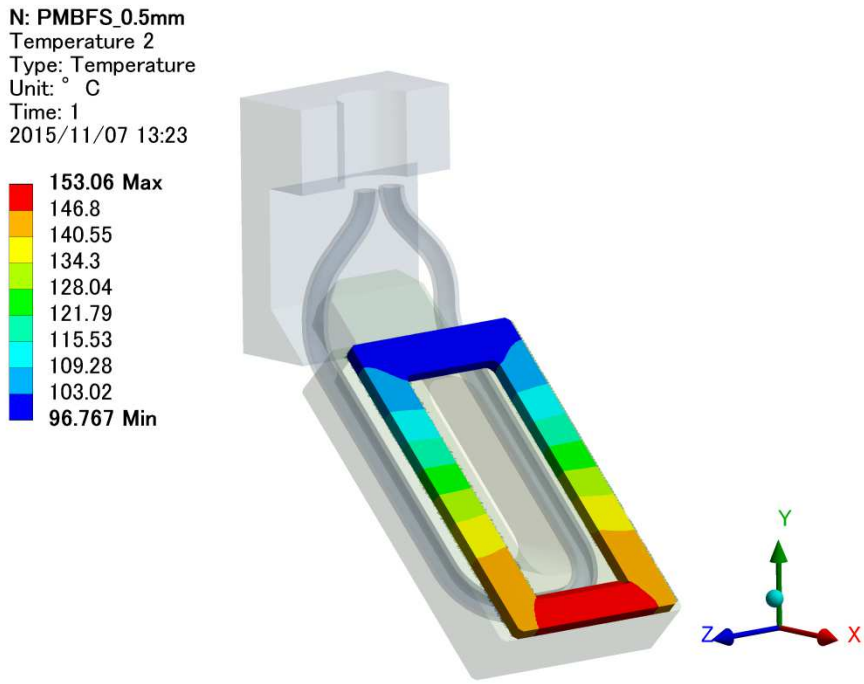

Fig. 4.1.3 Temperature profile of Tantalum

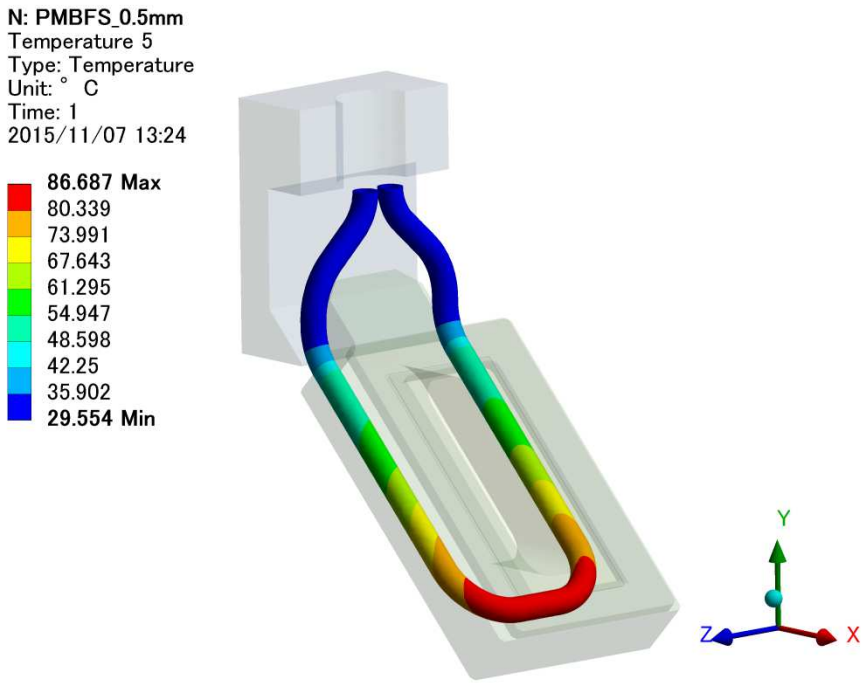

Fig. 4.1.4 Temperature profile of cooling pipe

4.2 Deformation profile

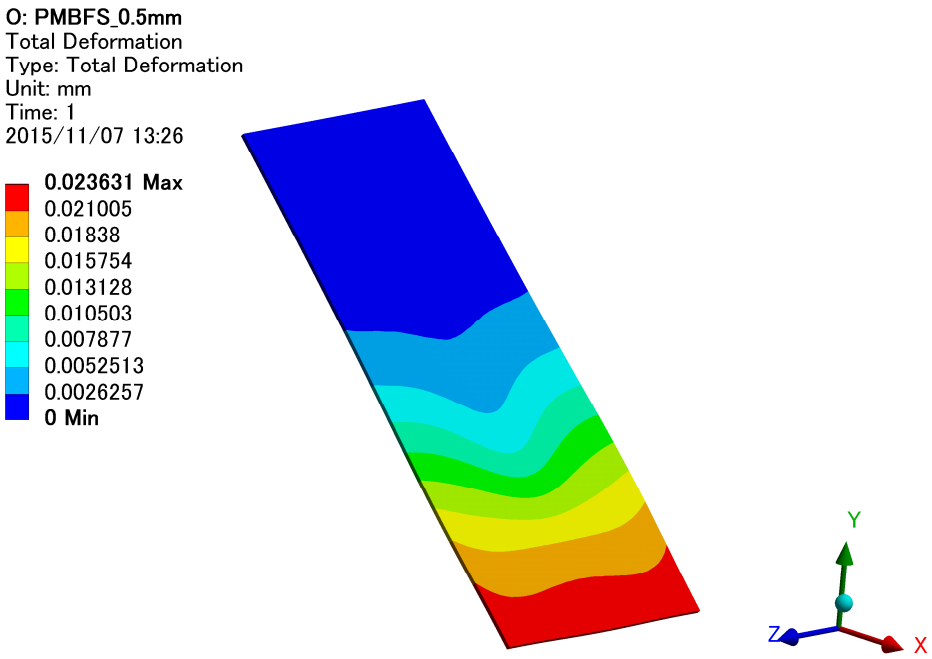

Fig. 4.2.1 Total Deformation

4.3 Stress profile

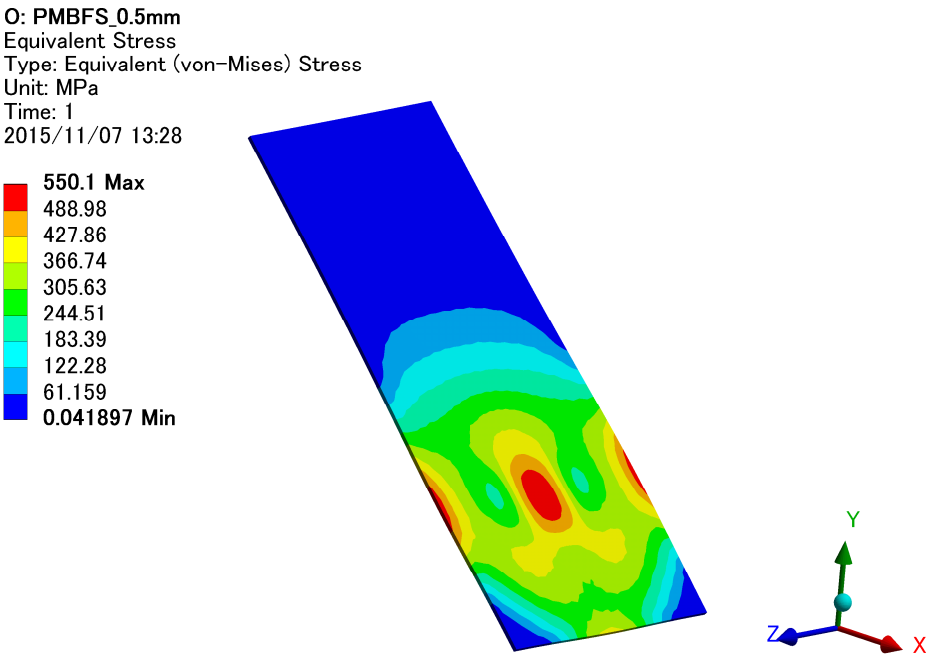

Fig. 4.3.1 Von Mises Stress of CVD diamond

4.4 Elastic strain profile

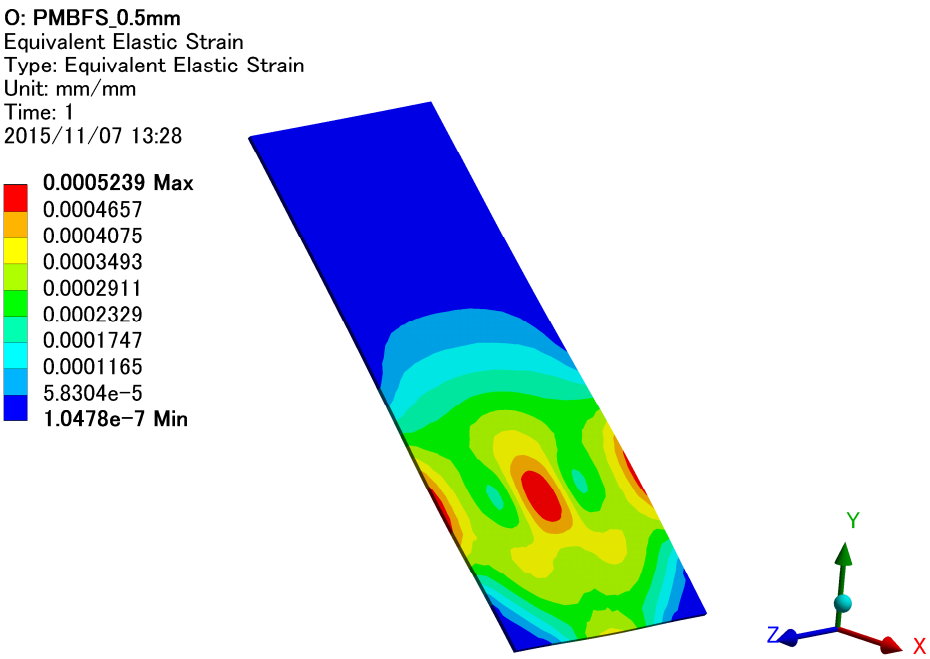

Fig. 4.4.1 Equivalent Elastic Strain of CVD diamond

NSLS 2 FXI PMFS

Pressure Vessel Structural analysis
- Vacuum and High inner pressure condition -

TOYAMA Co., Ltd

Date : Nov. 19, 2015

Created by : Hanashima

1. Scope

We have performed Pressure Vessel structural analysis of the Pink and Monochromatic beam Fluorescence Screen (PMFS) chamber of NSLS 2 FXI beamline to evaluate the deformation, stress and strain profiles. In this report, we assumed the High inner pressure is 15 psig when the vessel subject to back fill pressurization. The calculation was done by using ANSYS 16.0 Professional.

The analysis conditions are listed in Table 1.1. These values are cited from the Vacuum Consensus Guidelines (BNL-81715-2008-IR_Vacuum_Consensus_Guidelines_for_DOE_Labs). The more detail of the analysis conditions are written in Page 3 to 4.

Table 1.2 shows the analysis results. All these analysis results cleared the design criteria (BNL-81715-2008-IR).

	Vessel Pressure [Pa]		Gravity [m/s^2]
	Internal	External	
Vacuum condition	**0**	**101300**	**9.8**
High inner pressure condition	**103421 (15 psig)**	**0**	

Table 1.1 Analysis conditions

		Results	
Vacuum condition	Maximum deformation	**0.005**	mm
	Maximum Von Mises Stress	**10**	MPa
	Maximum Equivalent Elastic Strain	**0.005**	%
High inner pressure condition	Maximum deformation	**0.006**	mm
	Maximum Von Mises Stress	**11**	MPa
	Maximum Equivalent Elastic Strain	**0.005**	%
Substrate material		**SUS304L**	

Table 1.2 Results Summary

2. Dimensional drawing

Please see the dimensional drawing of the PMFS chamber in Fig. 2.1 and Fig. 2.2. The analysis was done by using these simplified model

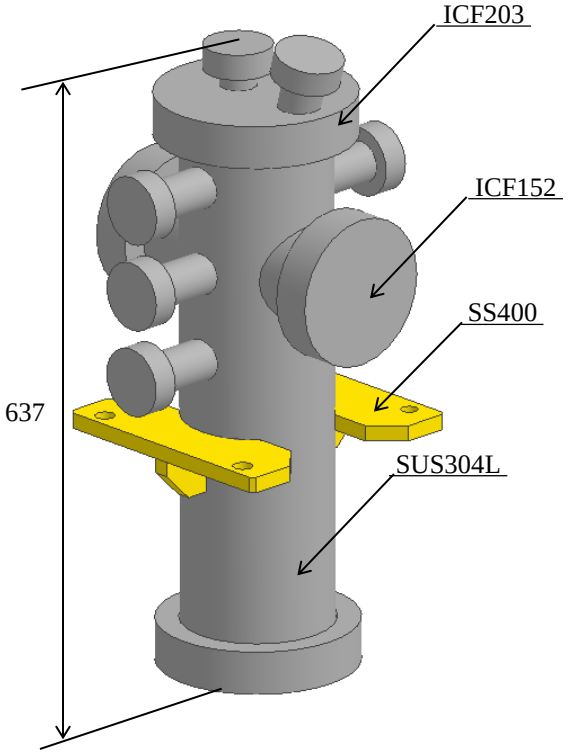

Fig. 2.1 Bird's eye view of chamber

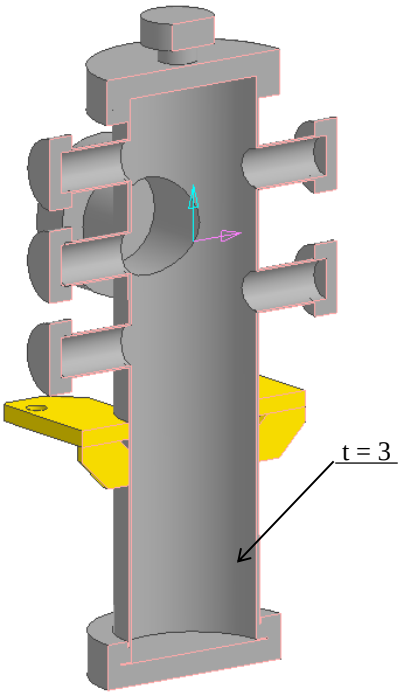

Fig. 2.2 Sectional view of chamber

3. Boundary conditions

3.1 For Static structural analysis

Fig. 3.1 shows the support points. All boundary conditions for static structural analysis is shown in Table 3.1.

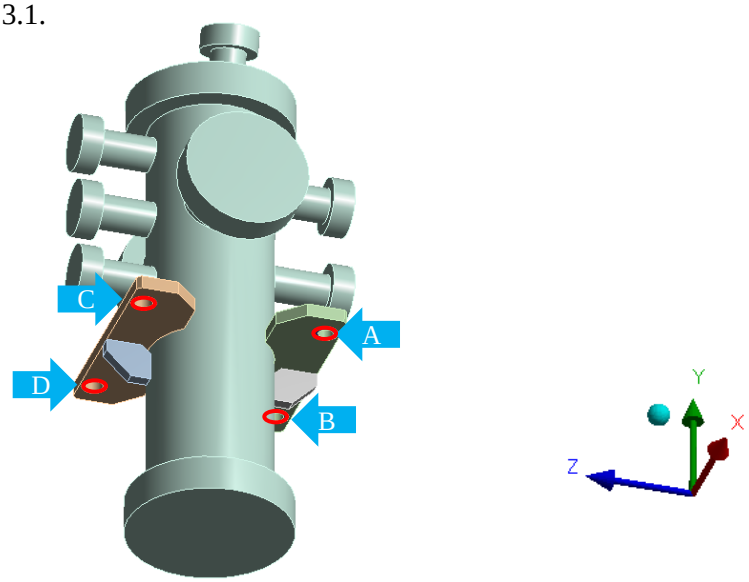

Fig. 3.2 Support Points

	Analysis Conditions
Surface A to D	**Fixed : X, Y, Z Axis**

Table 3.1 Support boundary conditions

3.2 Mesh model

Fig. 3.2 shows the mesh model used for analysis.

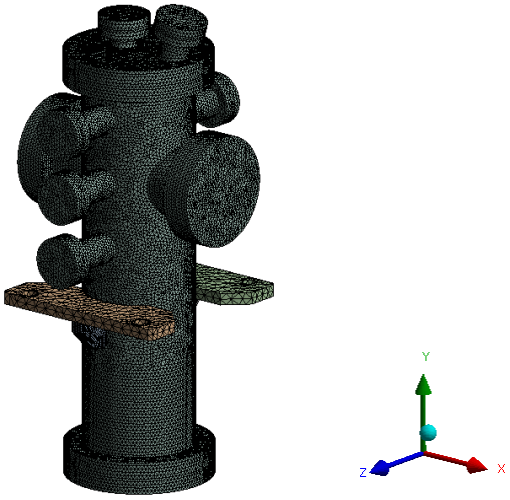

Fig. 3.2 Mesh model

3. Boundary conditions

3.3 Physical properties of materials

Table 3.3 shows the physical properties of materials used for analysis.

	Density	Young's modulus	Poisson's ratio
SUS304L	7930 kg/m³	1.93E+11 Pa	0.31
SS400	7900 kg/m³	2.06E+11 Pa	0.30

Table 3.4 Physical properties of materials

3.4 Pressure condition

The pressure conditions are as below.

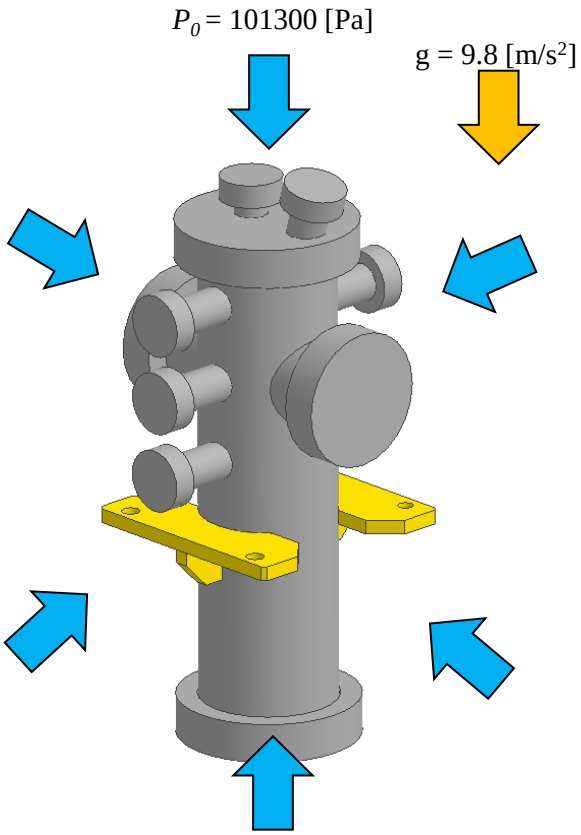

Fig. 3.5.1 Vacuum condition

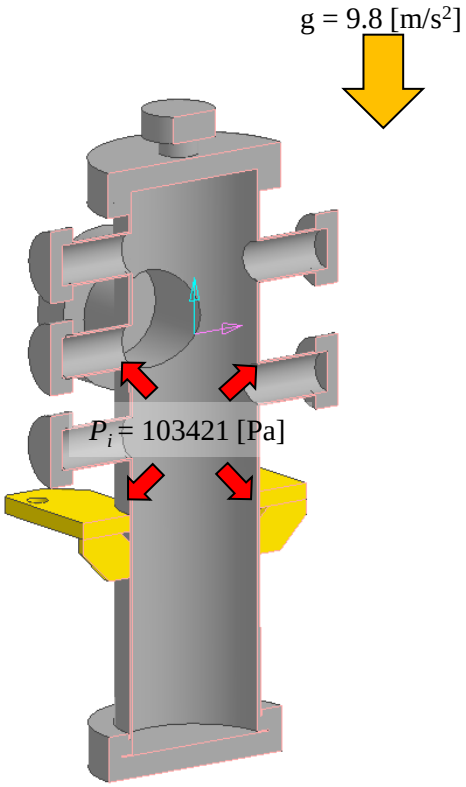

Fig. 3.5.2 High inner pressure condition

4. Calculation results

4.1 Deformation profile – Vacuum condition

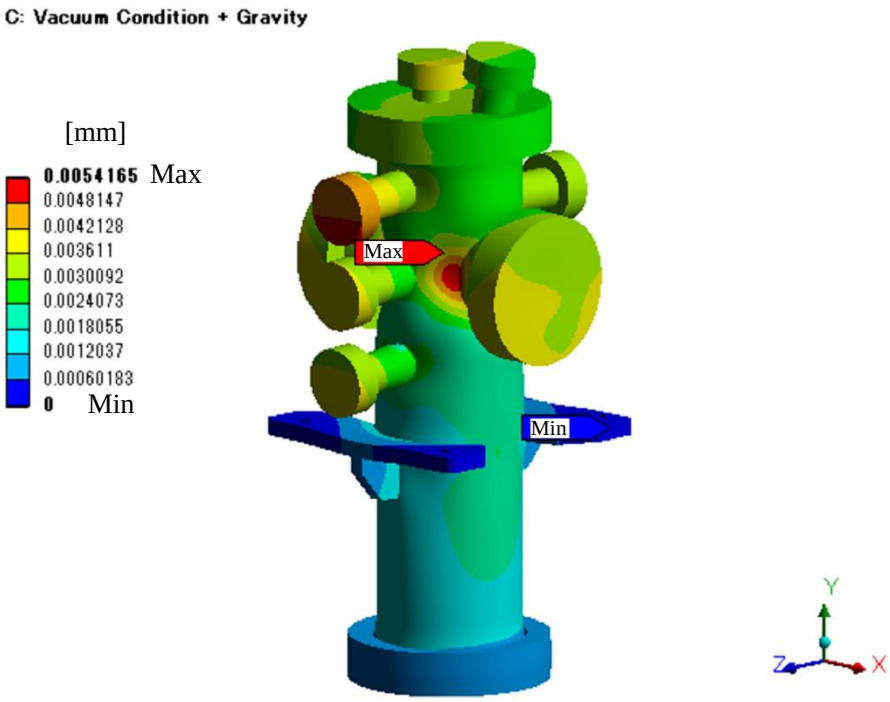

Fig. 4.1.1 Total deformation profile

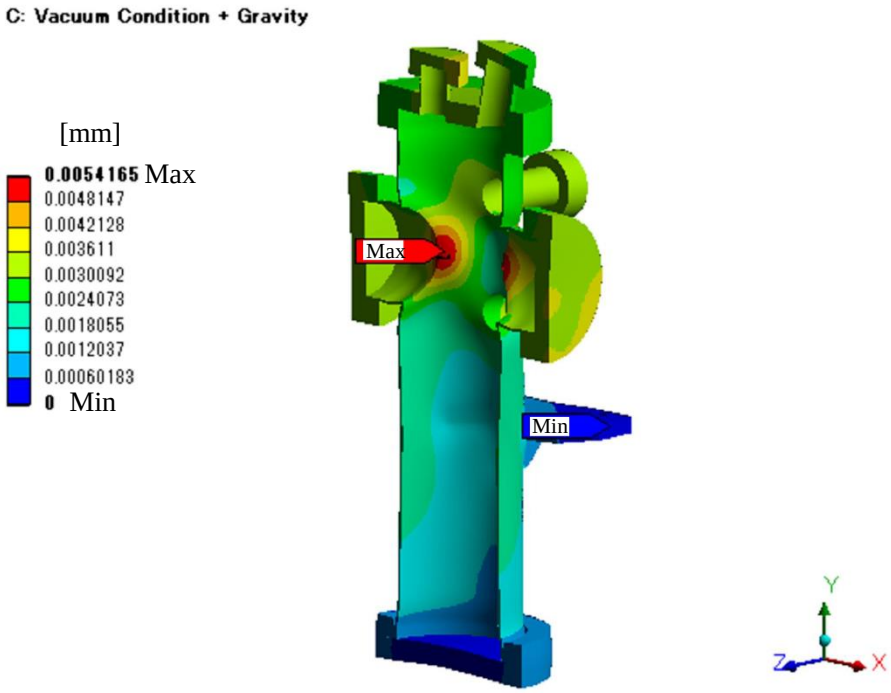

Fig. 4.1.2 Sectional view of total deformation profile

4.2 Stress profile – Vacuum condition

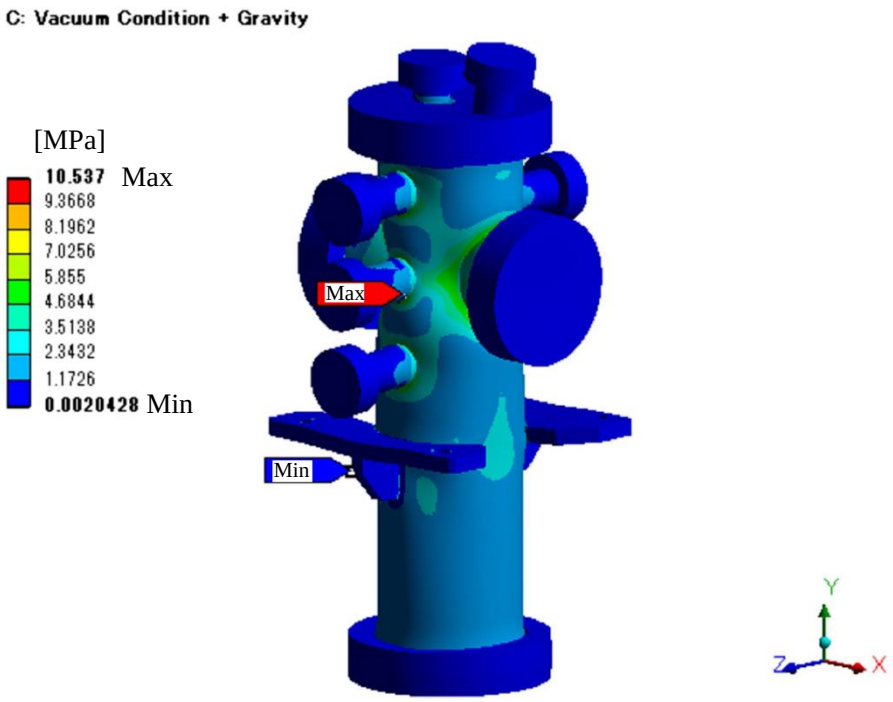

Fig. 4.2.1 Von Mises Stress profile

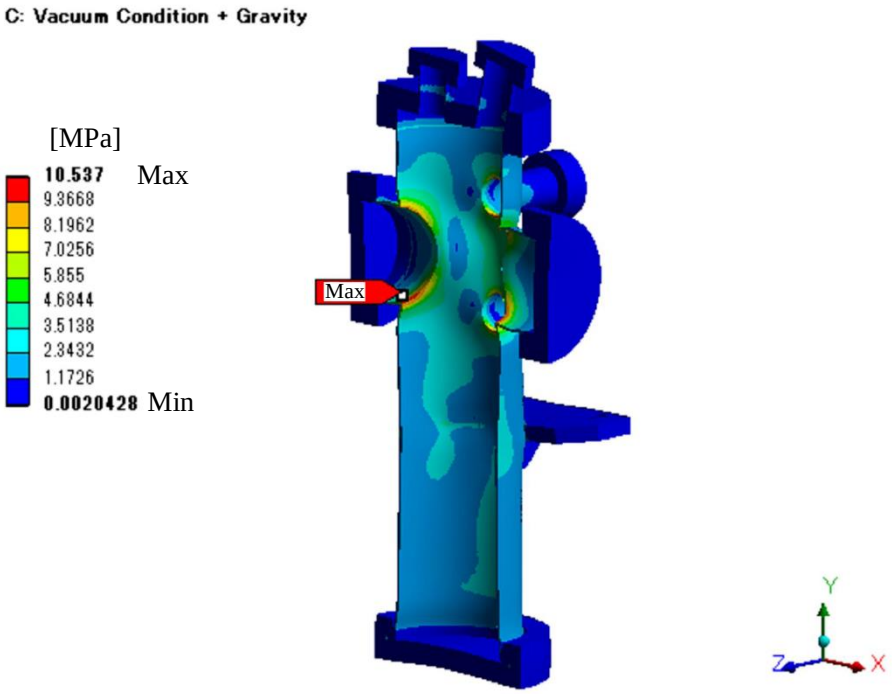

Fig. 4.2.2 Sectional view of Von Mises Stress profile

4.3 Elastic strain profile – Vacuum condition

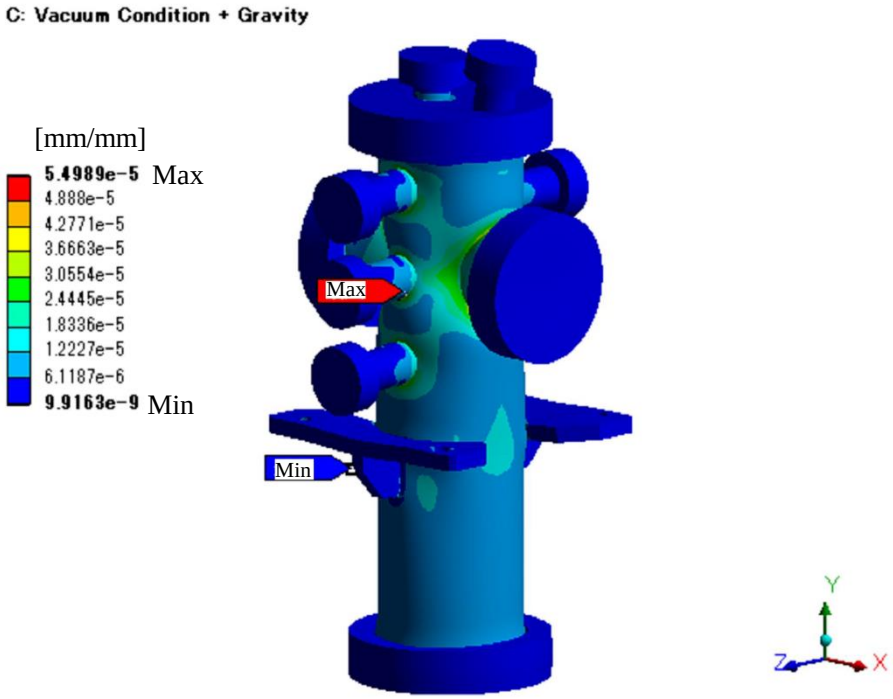

Fig. 4.3.1 Equivalent Elastic Strain profile

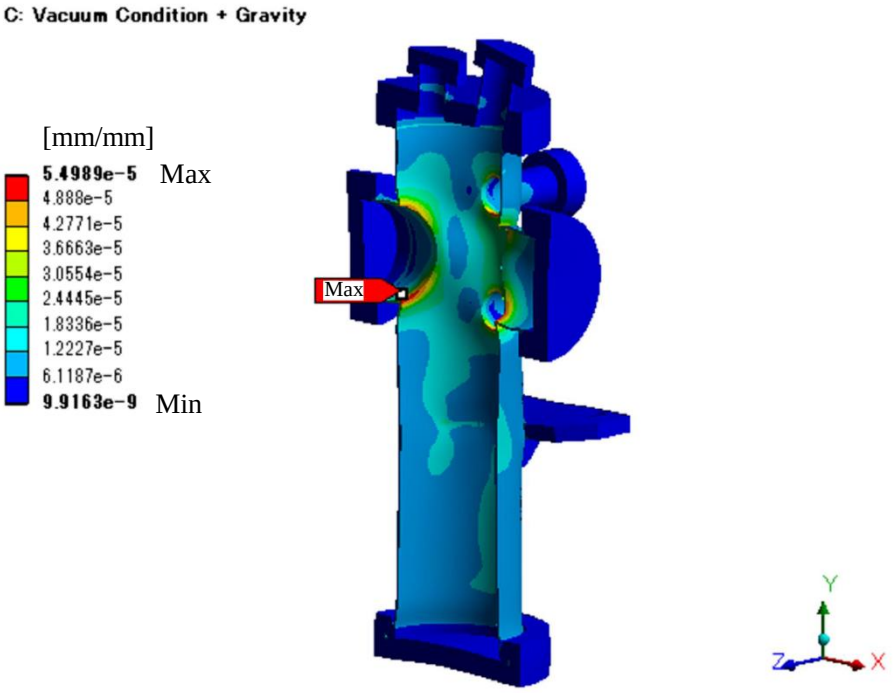

Fig. 4.3.2 Sectional view of Equivalent Elastic Strain profile

4. Calculation results

4.4 Deformation profile – High inner pressure condition

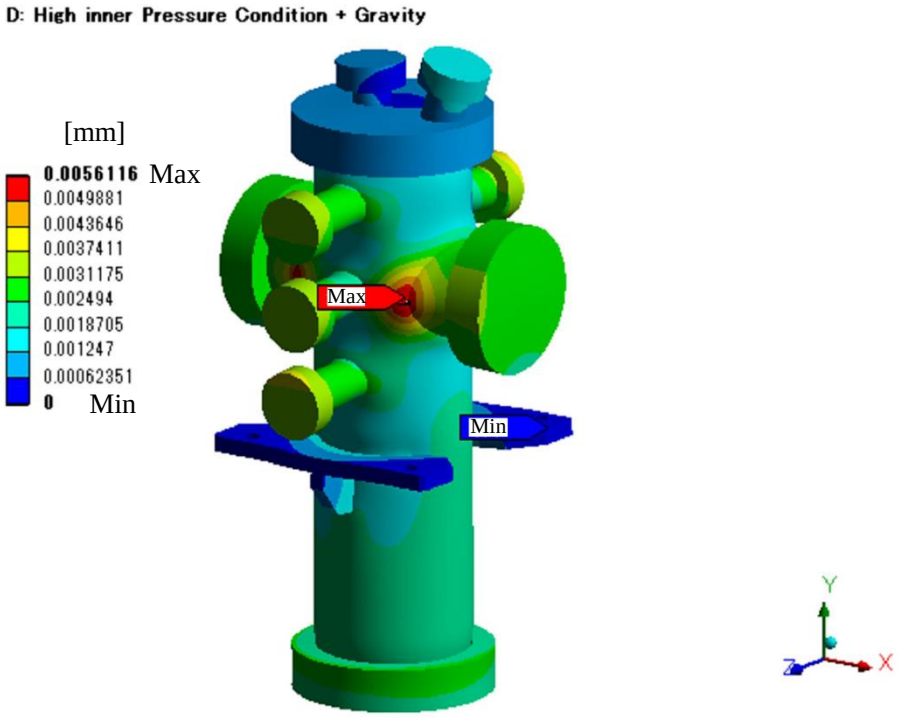

Fig. 4.4.1 Total deformation profile

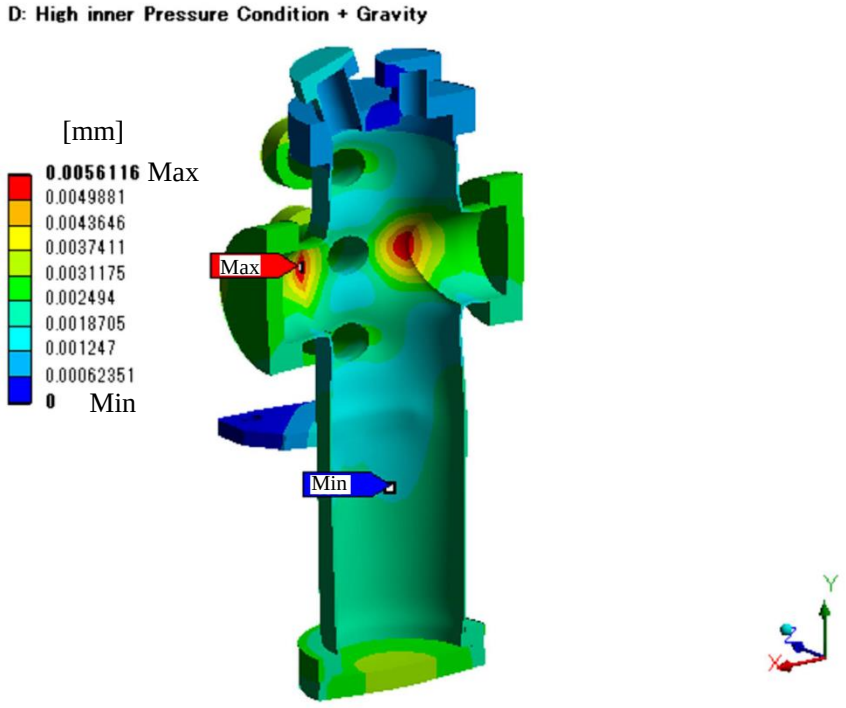

Fig. 4.4.2 Sectional view of total deformation profile

4.5 Stress profile – High inner pressure condition

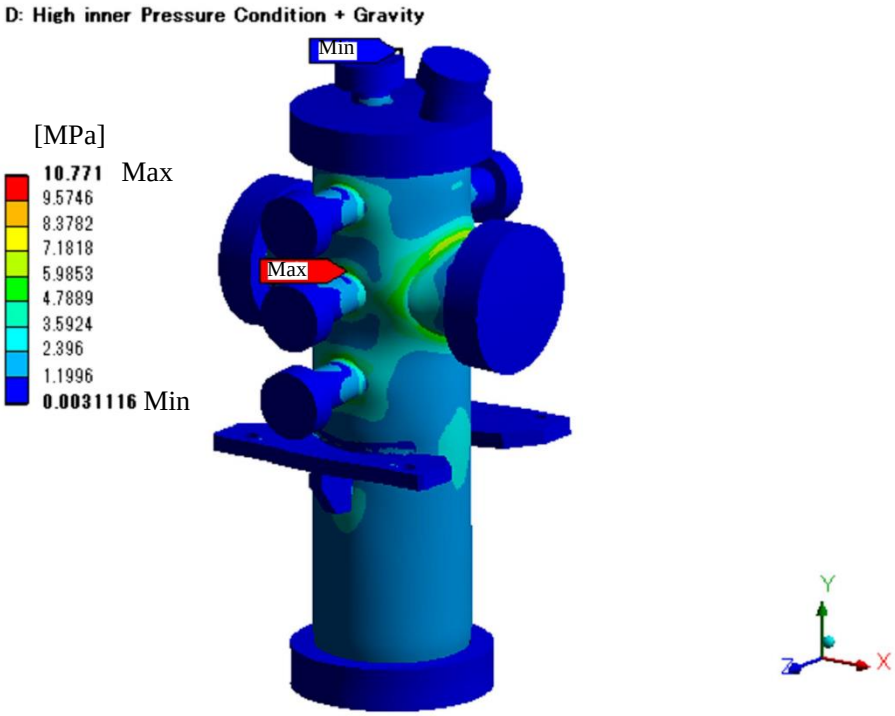

Fig. 4.5.1 Von Mises Stress profile

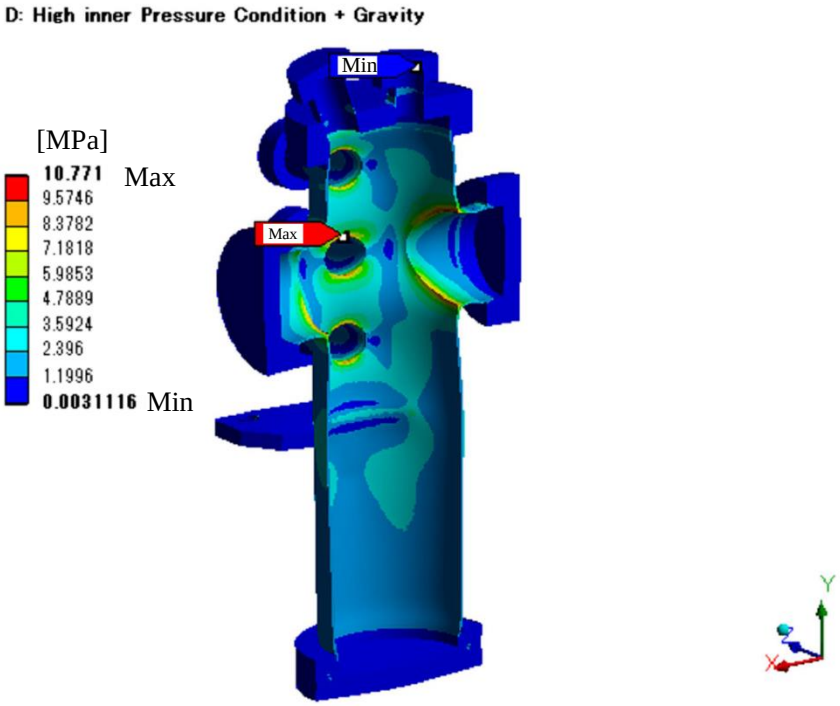

Fig. 4.5.2 Sectional view of Von Mises Stress profile

4.6 Elastic strain profile – High inner pressure

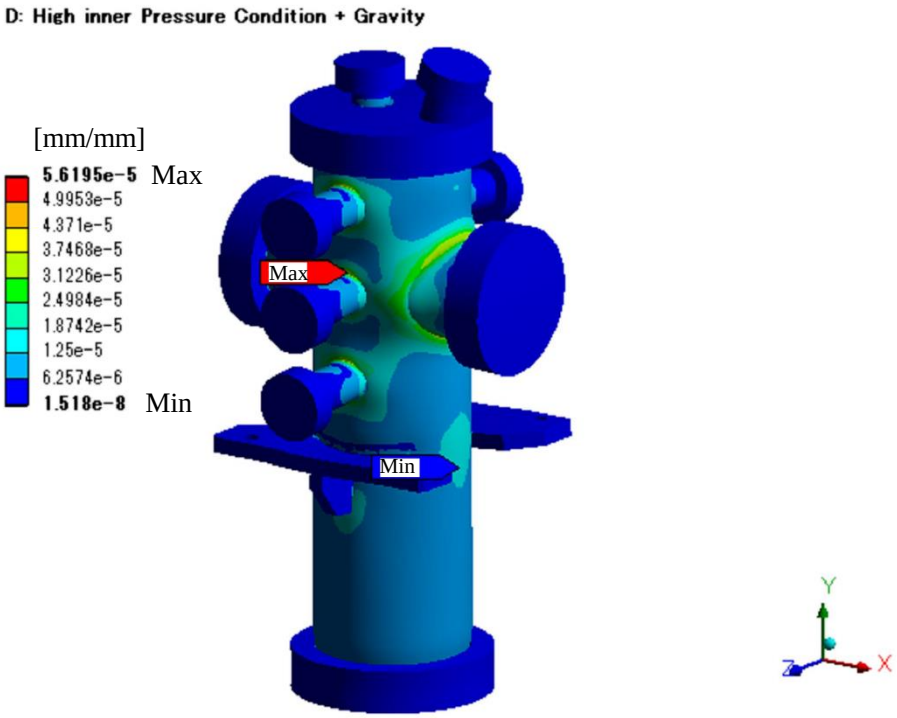

Fig. 4.6.1 Equivalent Elastic Strain profile

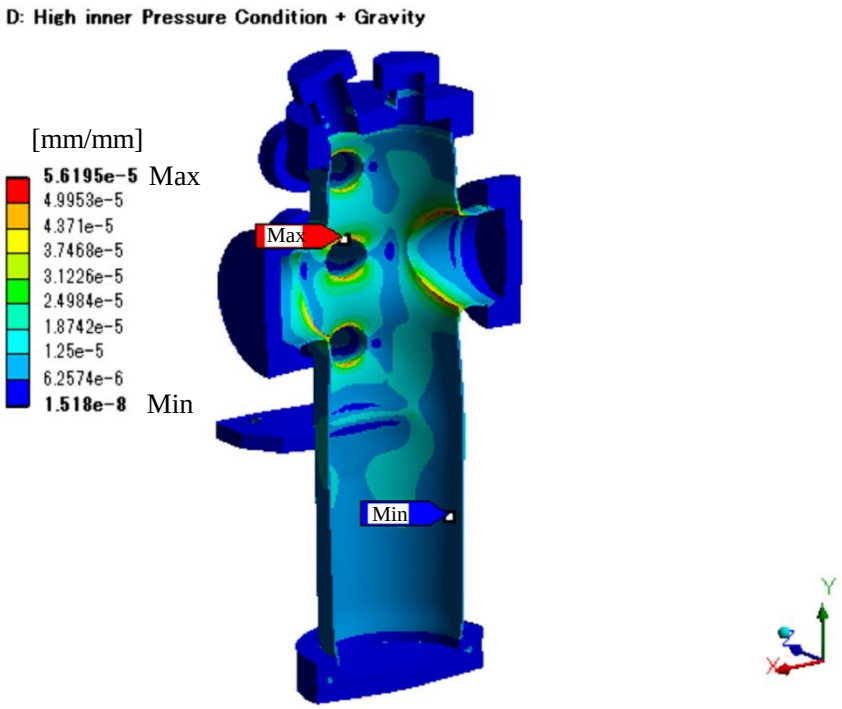

Fig. 4.6.2 Sectional view of Equivalent Elastic Strain profile

NSLS 2 FXI Pink Beam Stop

Thermo-Structural analysis.

TOYAMA Co., Ltd

Date : Nov. 24, 2015

Created by : Tsubota

1. Scope

We have performed thermo-structural analysis of the pink beam stop(PBST) of NSLS 2 FXI beamline to evaluate the temperature, deformation, stress and strain profiles. In this report, we assumed the situation that pink beam directly irradiates the PBS. The calculation was done by using ANSYS 16.0 Mechanical.

The analysis conditions are listed in Table 1.1. These values are cited from the Technical Specification(NX-C-SPC-FXI-PDS-001). The more detail of the analysis conditions are written in Page 3.

Table 1.2 shows the analysis results. All these analysis results cleared the design criteria(LT-C-XFD-SPC-COM-001).

	Analysis conditions
Total Absorbed Power	**956** W
Distance from the source	**35.5** m
Foot Print	H × V = **7.455** mm × **17.6** mm

Table 1.1. Analysis conditions

	Results
Maximum Temperature	**173.8** ℃
Cooling pipe Temperature	**58.9** ℃
Maximum Von Mises Stress	**122.7** MPa
Maximum Equivalent Elastic Strain	**0.094** %
Substrate material	**Glidcop**

Table 1.2. Results Summary

2. Dimensional drawing

Please see the dimensional drawing of the PBST in Fig. 2.1, Fig. 2.2 and Fig. 2.3. The analysis was done by using these simplified model

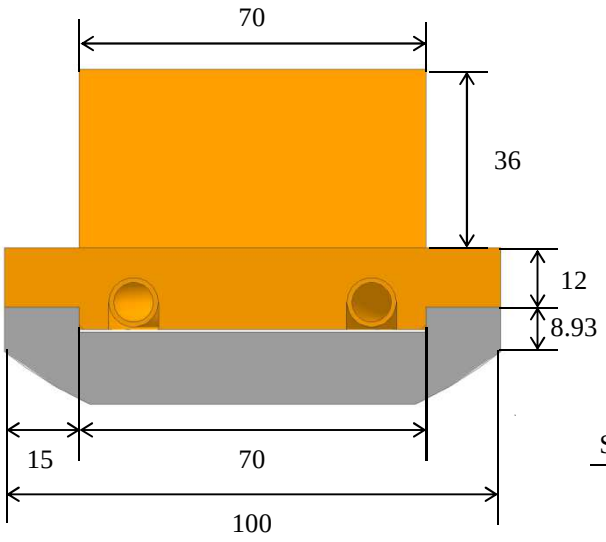

Fig. 2.1 Front view

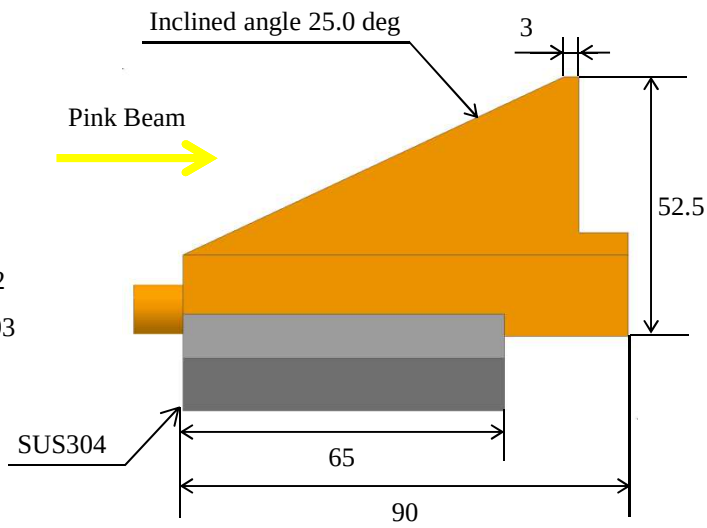

Fig. 2.2 Side view

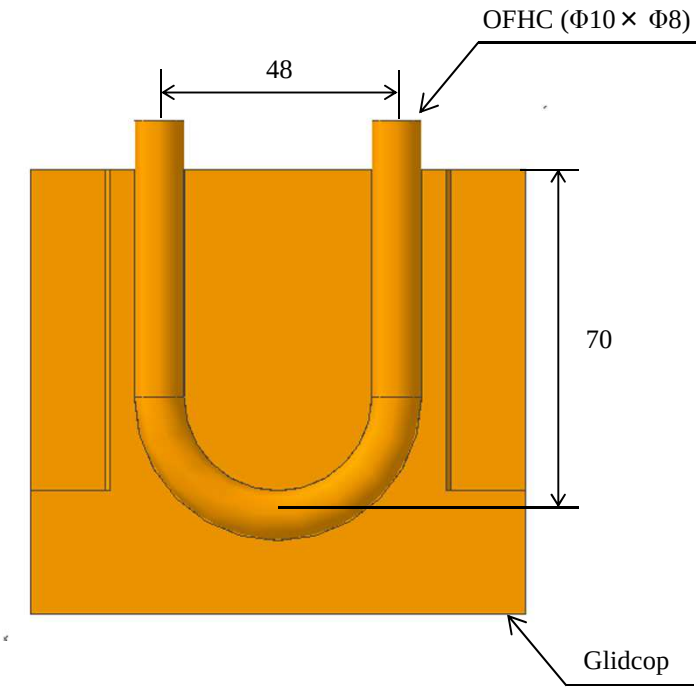

Fig. 2.3 Bottom view

3. Boundary conditions

3.1 For thermal analysis

The green area in Fig. 3.1.1 shows the heat input position. We assumed all the pink beam irradiates the PBST. The yellow surface in Fig. 3.1.2 shows the convection surface. Table 3.1 shows the boundary conditions for thermal analysis. The detail of power map applied to the PBST is shown in Page 5.

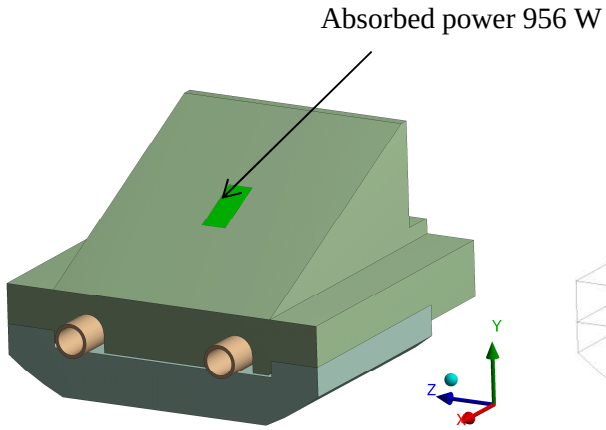

Fig. 3.1.1 Heat input area

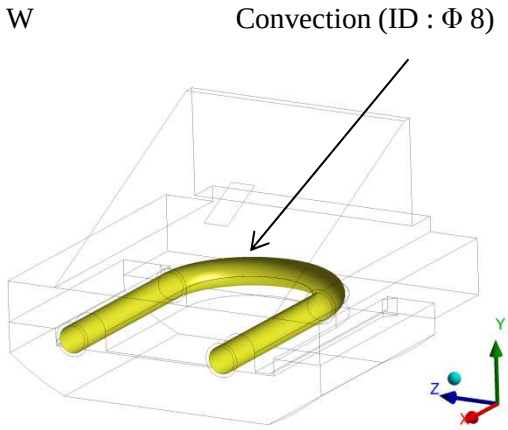

Fig. 3.1.2 convection surface

	Analysis Conditions	
Cooling Water temperature	**29.5**	℃
Total absorbed power	**956**	W
Maximum heat flux	**7.66**	W/mm^2
Distance from the source	**35.5**	m
Beam size	H × V = **7.455** mm × **7.455** mm	
Foot print	H × V = **7.455** mm × **17.6** mm	
Inclined Angle	**25.0**	degrees
Pressure Loss	**0.020**	MPa
	Cooling Conditions	
Convection coefficient	**9000**	W/m^2・K
Flow rate	**6.0**	L/min
Flow velocity	**2.0**	m/s
Pipe inner diameter	**8**	mm

Table 3.1 Analysis Conditions

3. Boundary conditions

3.2 For Static structural analysis

Fig. 3.2 shows the support points. All boundary conditions for static structural analysis is shown in Table 3.2.

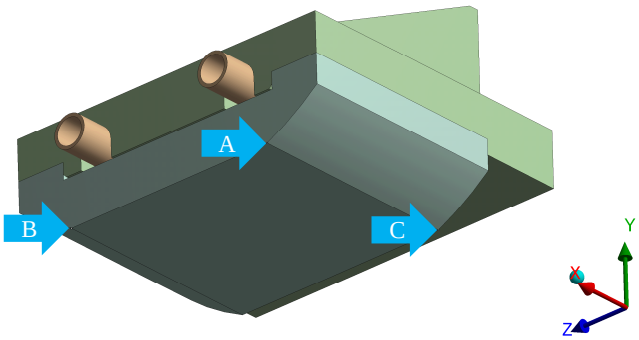

Fig. 3.2 Support Points

	Analysis Conditions	
Point A	**Fixed : X, Y, Z Axis**	
Point B	**Fixed : X, Y Axis**	**Free : Z Axis**
Point C	**Fixed : Y Axis**	**Free : X, Z Axis**
Reference temperature	**29.5**	℃

Table 3.2 Support boundary conditions

3.3 Mesh model

Fig. 3.3 shows the mesh model used for analysis.

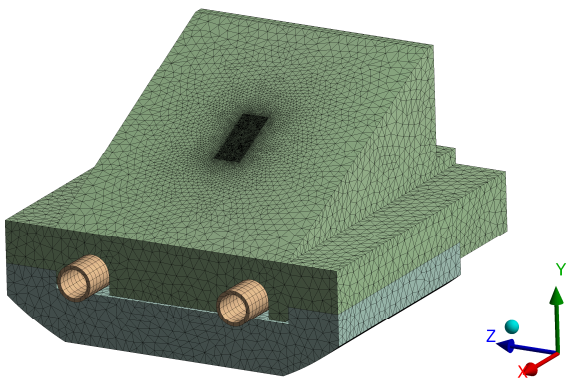

Fig. 3.3 Mesh model

3. Boundary conditions

3.4 Physical properties of materials

Table 3.4 shows the physical properties of materials used for analysis.

	Density [kg/m^3]	Young's modulus [Pa]	Poisson's ratio	Thermal Expansion [1/K]	Thermal Conductivity [W/m・K]	Yield Stress [MPa]
Glidcop AL-15	8900	1.30E+11	0.326	1.66E-05	365	358
SUS304	7930	1.93E+11	0.31	1.55E-05	15.3	205

Table 3.4 Physical properties of materials

3.5 Power map calculation

The power map calculation was done by using *SPECTRA software. The Fig. 3.5.1 and Fig. 3.5.2 show the power map which applied for analysis. We assumed the synchrotron light is absorbed in PBST. Table 3.5 show the heat balance sheet.

* T. Tanaka and H. Kitamura, J. Synchrotron Radiation 8 (2001) 1221.
Email : ztanaka@spring8.or.jp
URL : http://radiant.harima.riken.go.jp/spectra/index.html

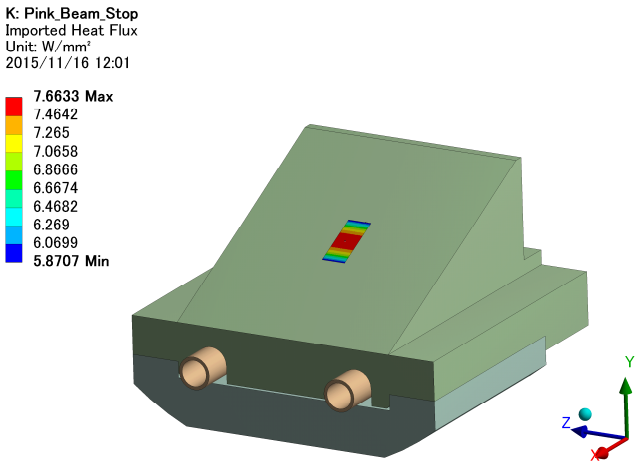

Fig. 3.5.1 Bird's eye view of power map

Total power calculation		
Total power	**956**	W
Total absorbed power	**956**	W
Total passing power	**0**	W

Table 3.5 Heat balance sheet

4. Calculation results

4.1 Temperature profile

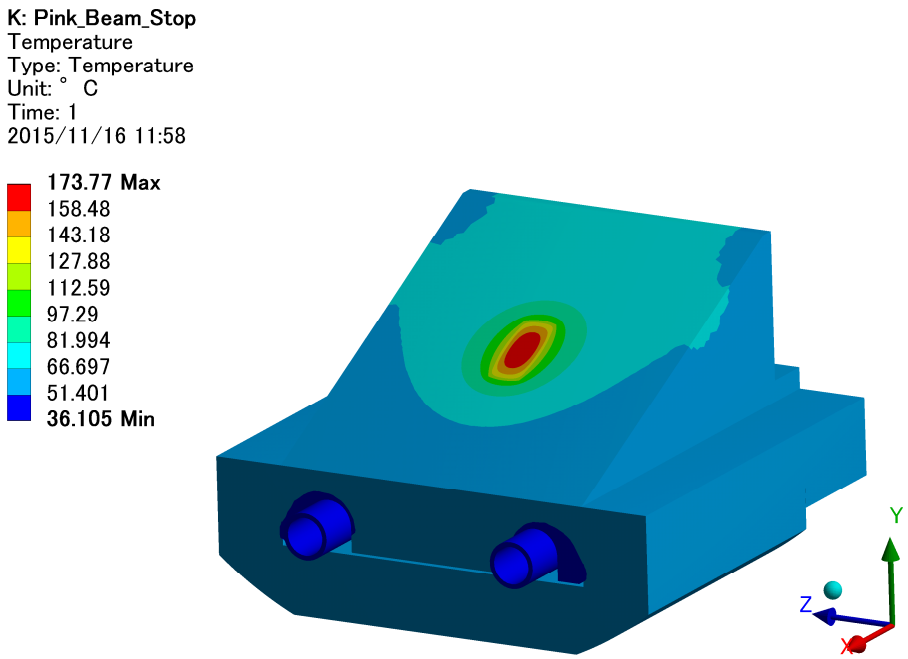

Fig. 4.1.1 Temperature profile

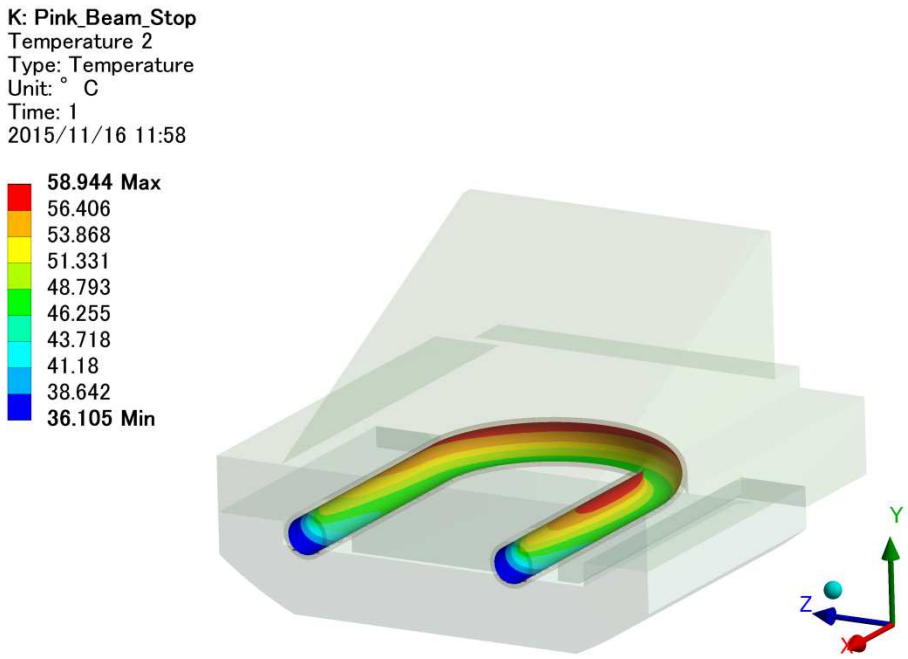

Fig. 4.1.2 The temperature profile of cooling surface

4.2 Deformation profile

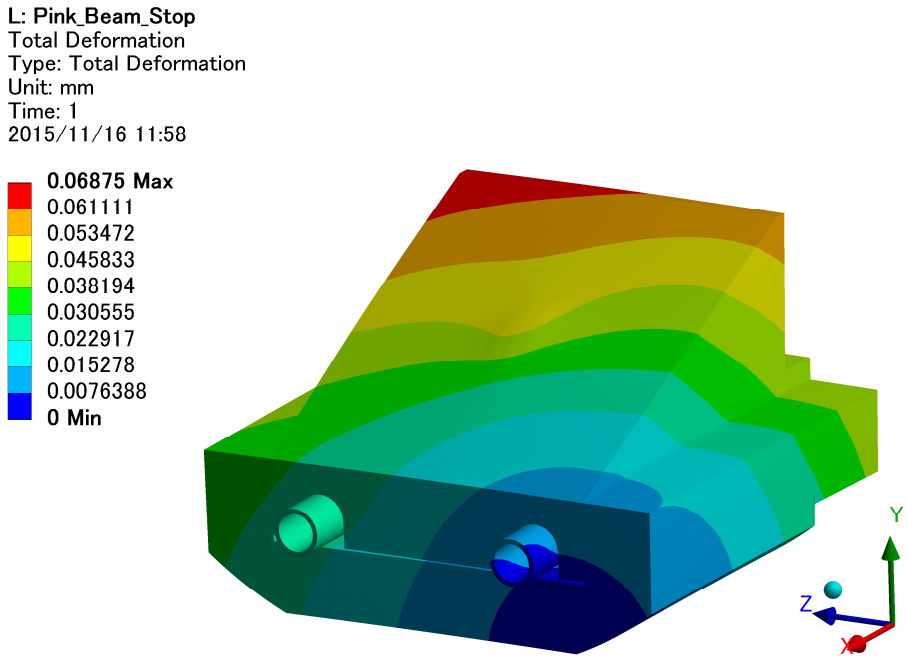

Fig. 4.2 Total Deformation

4.3 Stress profile

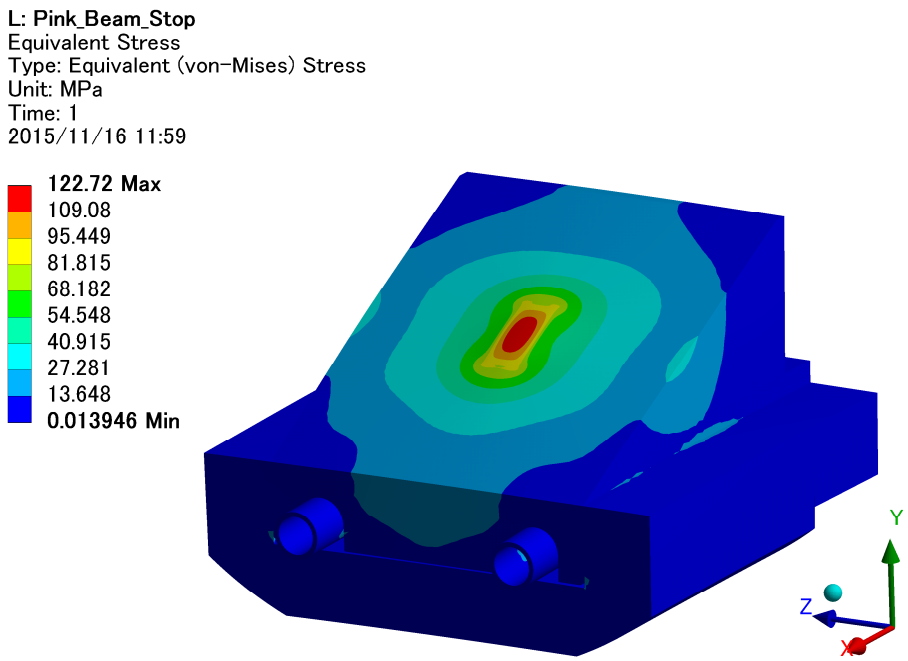

Fig. 4.3 Equivalent stress

4.4 Elastic strain profile

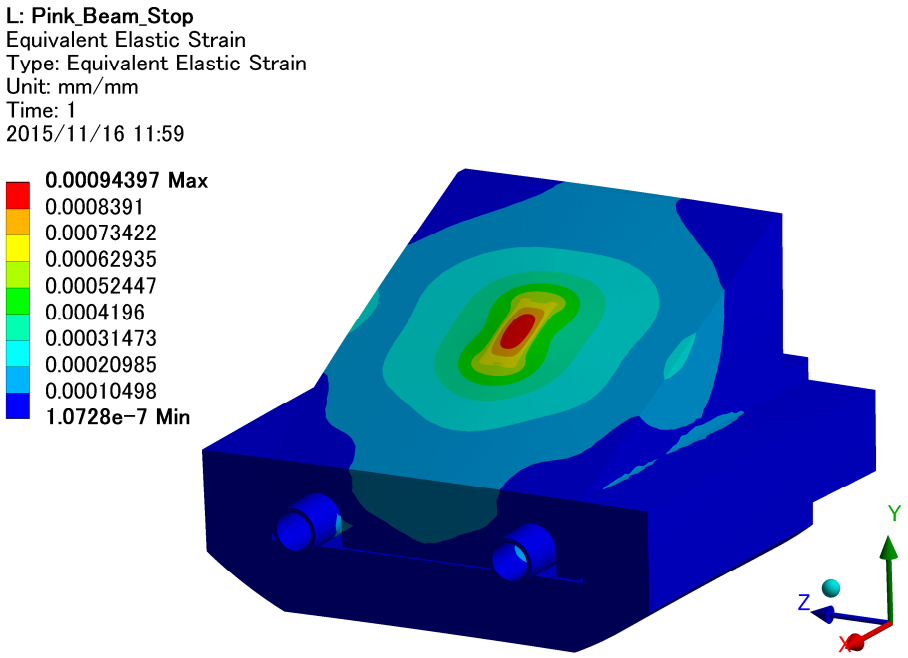

Fig. 4.4 Equivalent Elastic Strain

NSLS 2 FXI Focusing Mirror

Pressure Vessel Structural analysis
- Vacuum and High inner pressure condition -

TOYAMA Co., Ltd

Date : Nov. 19, 2015

Created by : Hanashima

1. Scope

We have performed Pressure Vessel structural analysis of the Focusing mirror(FM) chamber of NSLS 2 FXI beamline to evaluate the deformation, stress and strain profiles. In this report, we assumed the High inner pressure is 15 psig when the vessel subject to back fill pressurization. The calculation was done by using ANSYS 16.0 Professional.

The analysis conditions are listed in Table 1.1. These values are cited from the Vacuum Consensus Guidelines (BNL-81715-2008-IR_Vacuum_Consensus_Guidelines_for_DOE_Labs). The more detail of the analysis conditions are written in Page 3 to 4.

Table 1.2 shows the analysis results. All these analysis results cleared the design criteria (BNL-81715-2008-IR).

	Vessel Pressure [Pa]		Gravity [m/s^2]
	Internal	External	
Vacuum condition	**0**	**101300**	**9.8**
High inner pressure condition	**103421 (15 psig)**	**0**	

Table 1.1 Analysis conditions

		Results	
Vacuum condition	Maximum deformation	**0.55**	mm
	Maximum Von Mises Stress	**68**	MPa
	Maximum Equivalent Elastic Strain	**0.05**	%
High inner pressure condition	Maximum deformation	**0.52**	mm
	Maximum Von Mises Stress	**67**	MPa
	Maximum Equivalent Elastic Strain	**0.05**	%
Substrate material		**SUS304L**	

Table 1.2 Results Summary

2. Dimensional drawing

Please see the dimensional drawing of the FM chamber in Fig. 2.1 and Fig. 2.2. The analysis was done by using these simplified model

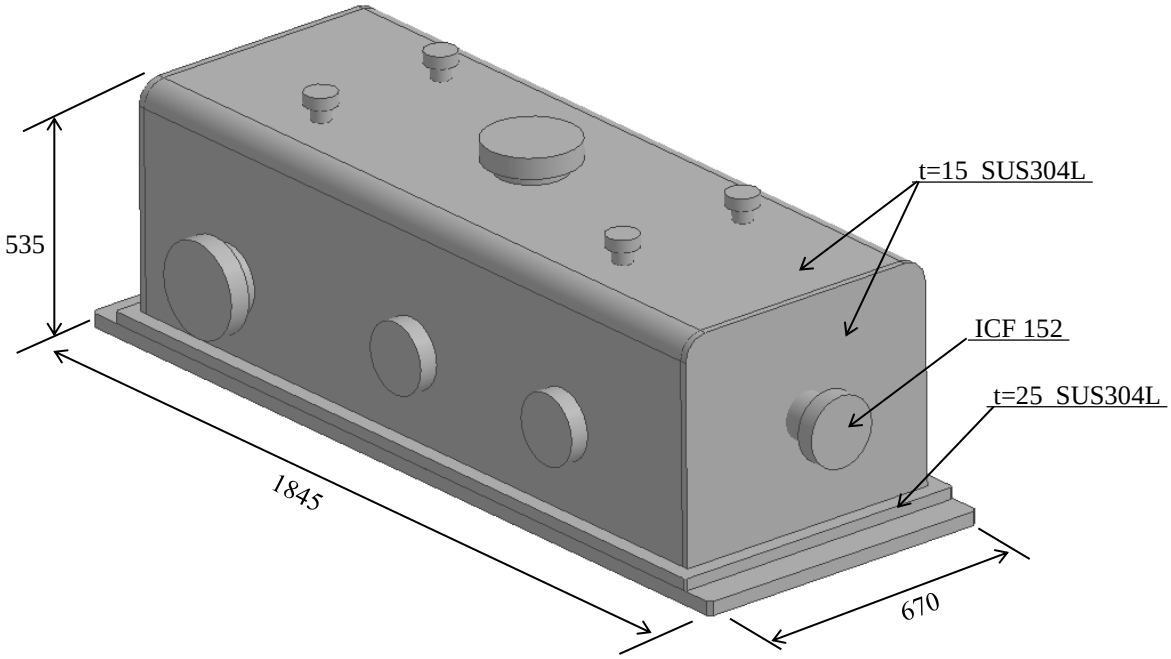

Fig. 2.1 Bird's eye view of chamber

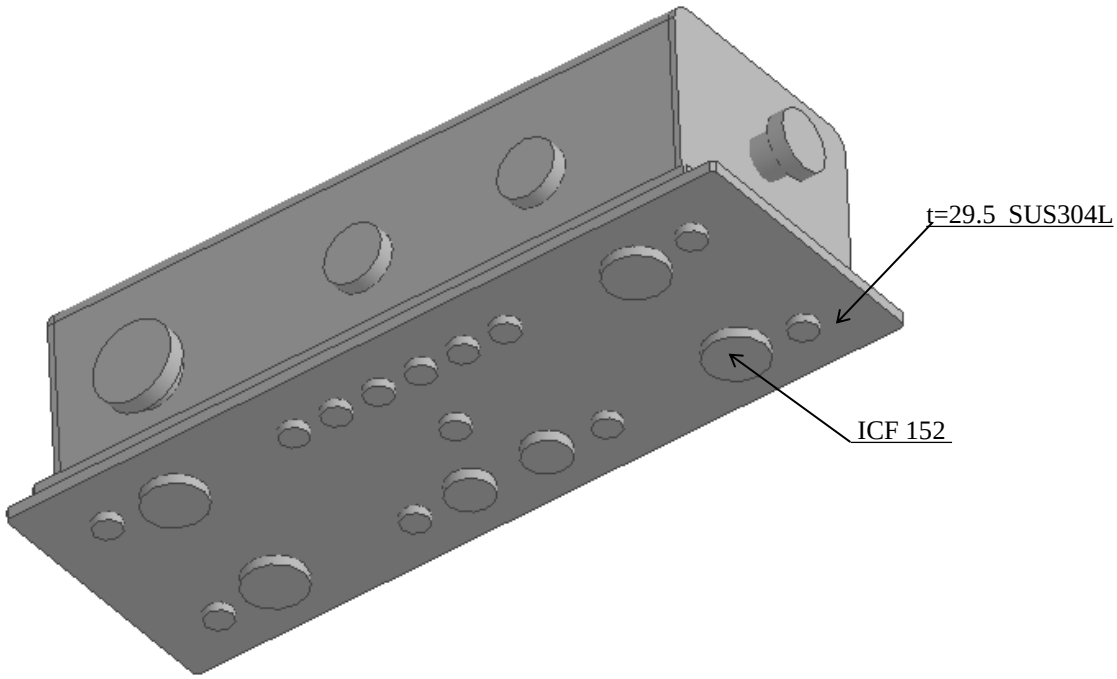

Fig. 2.2 Under view of chamber

3. Boundary conditions

3.1 For Static structural analysis

Fig. 3.1 shows the support points. All boundary conditions for static structural analysis is shown in Table 3.1.

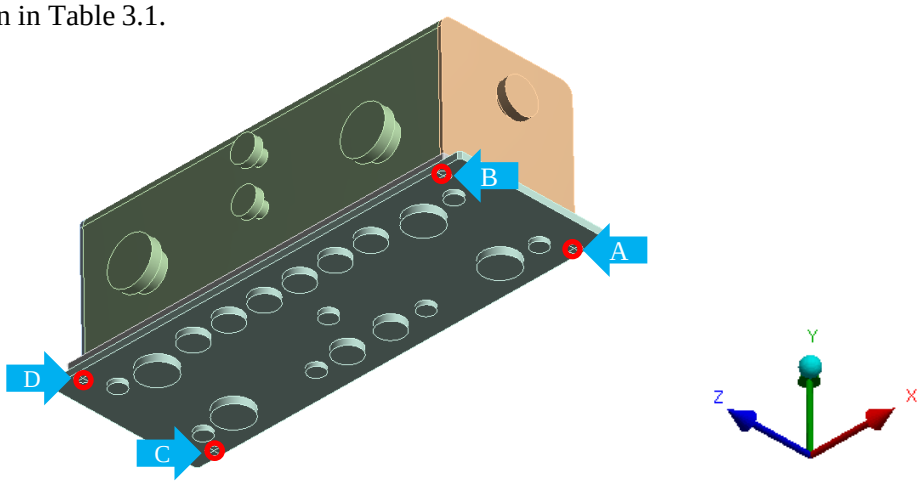

Fig. 3.2 Support Points

	Analysis Conditions
Surface A to D	**Fixed : X, Y, Z Axis**

Table 3.1 Support boundary conditions

3.2 Mesh model

Fig. 3.2 shows the mesh model used for analysis.

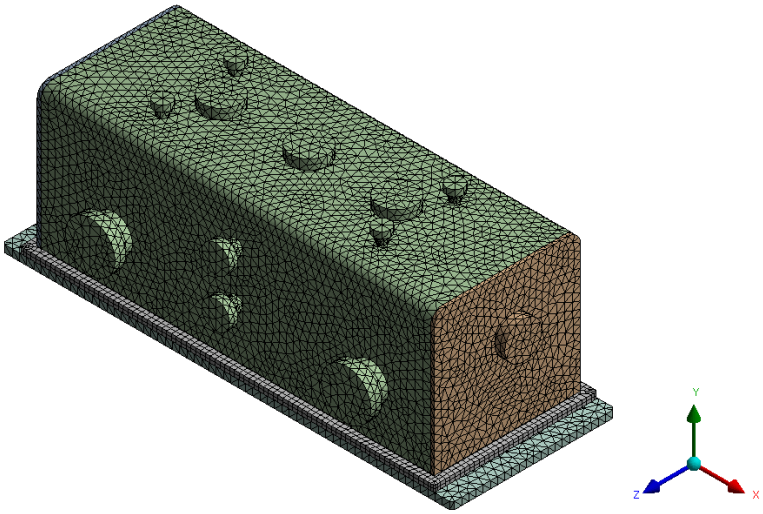

Fig. 3.2 Mesh model

3. Boundary conditions

3.3 Physical properties of materials

Table 3.3 shows the physical properties of materials used for analysis.

	Density	Young's modulus	Poisson's ratio
SUS304L	7930 kg/m³	1.93E+11 Pa	0.31
SS400	7900 kg/m³	2.06E+11 Pa	0.30

Table 3.4 Physical properties of materials

3.4 Pressure condition

The pressure conditions are as below.

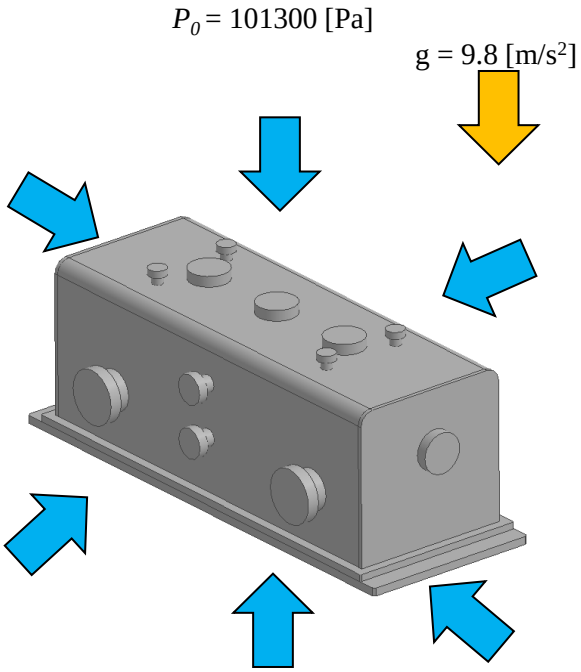

Fig. 3.5.1 Vacuum condition

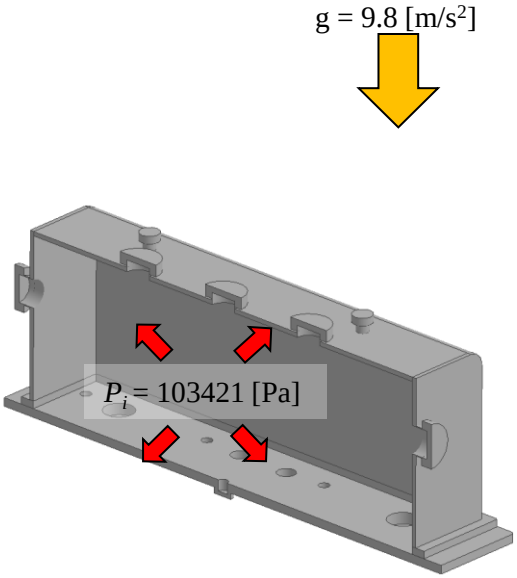

Fig. 3.5.2 High inner pressure condition

4. Calculation results

4.1 Deformation profile – Vacuum condition

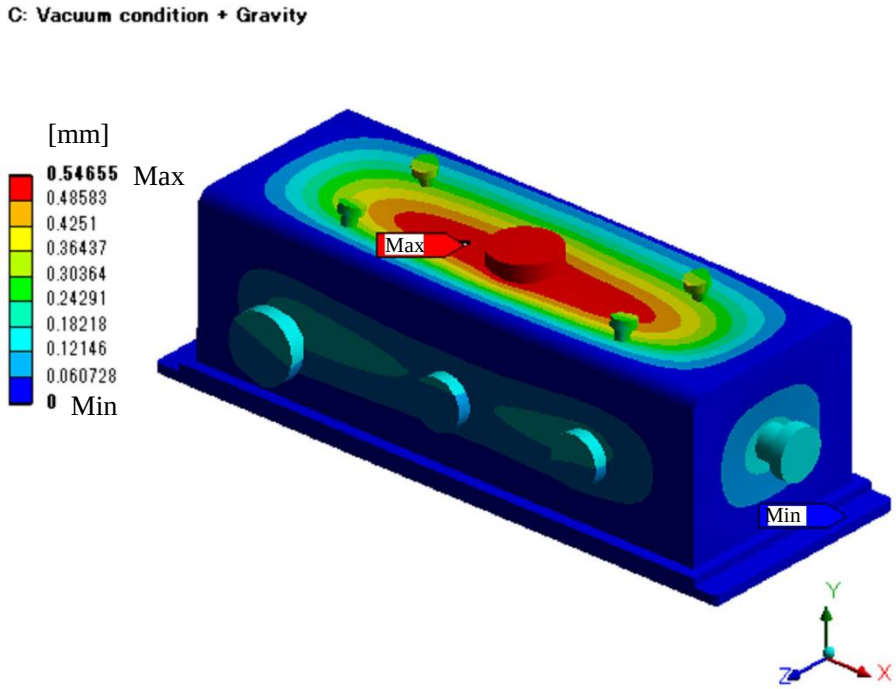

Fig. 4.1.1 Total deformation profile

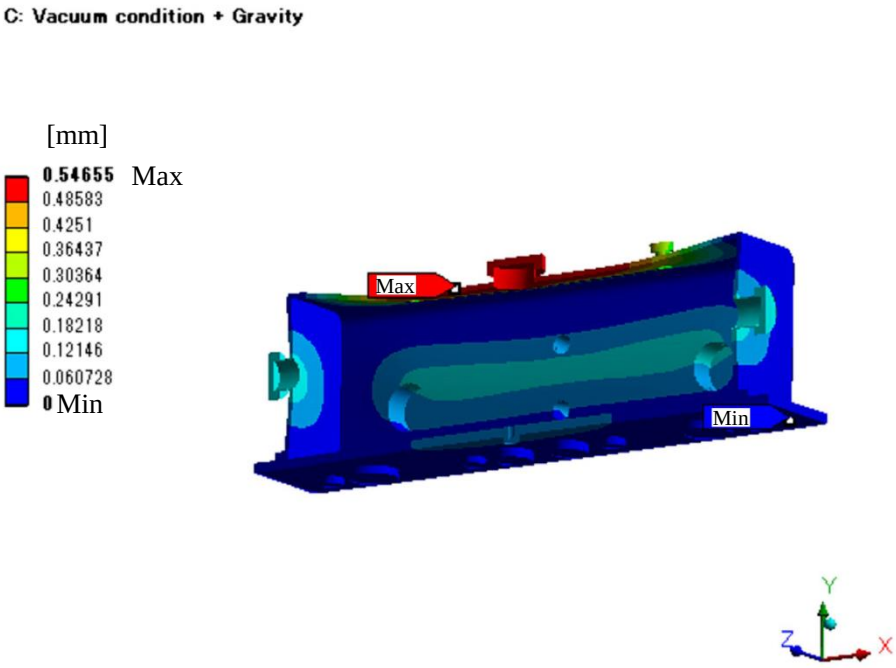

Fig. 4.1.2 Sectional view of total deformation profile

4.2 Stress profile – Vacuum condition

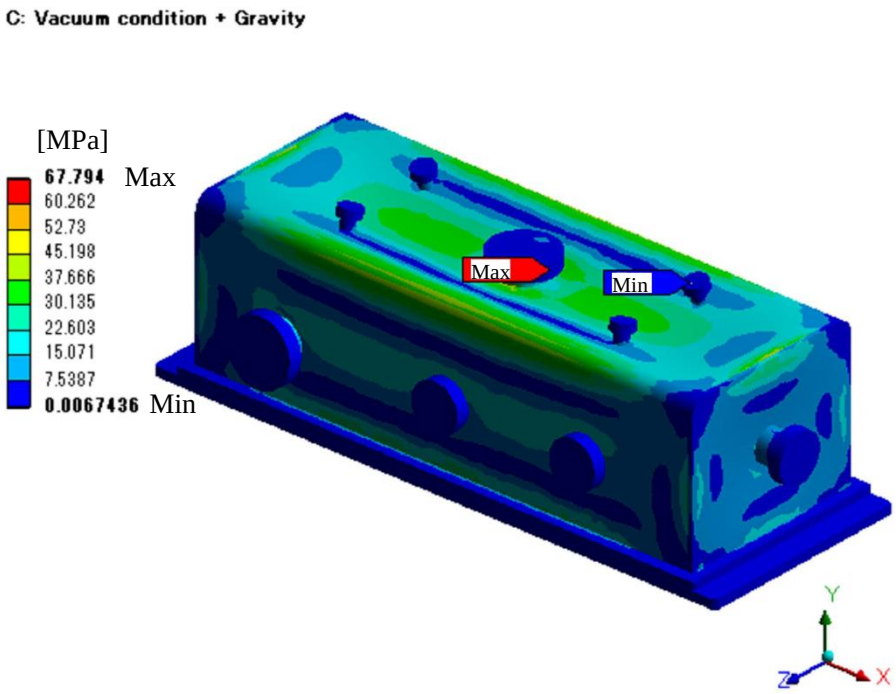

Fig. 4.2.1 Von Mises Stress profile

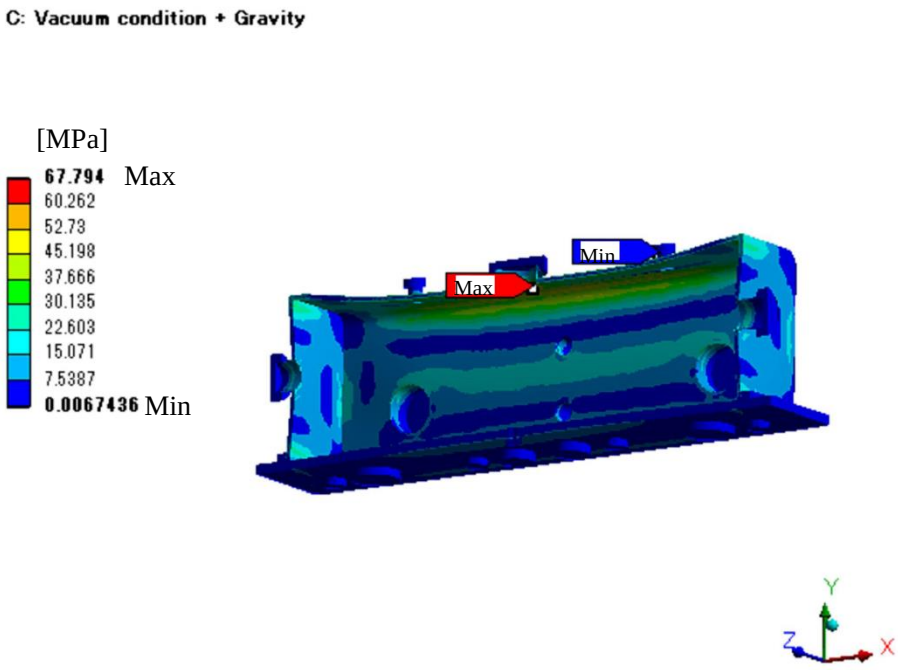

Fig. 4.2.2 Sectional view of Von Mises Stress profile

4.3 Elastic strain profile – Vacuum condition

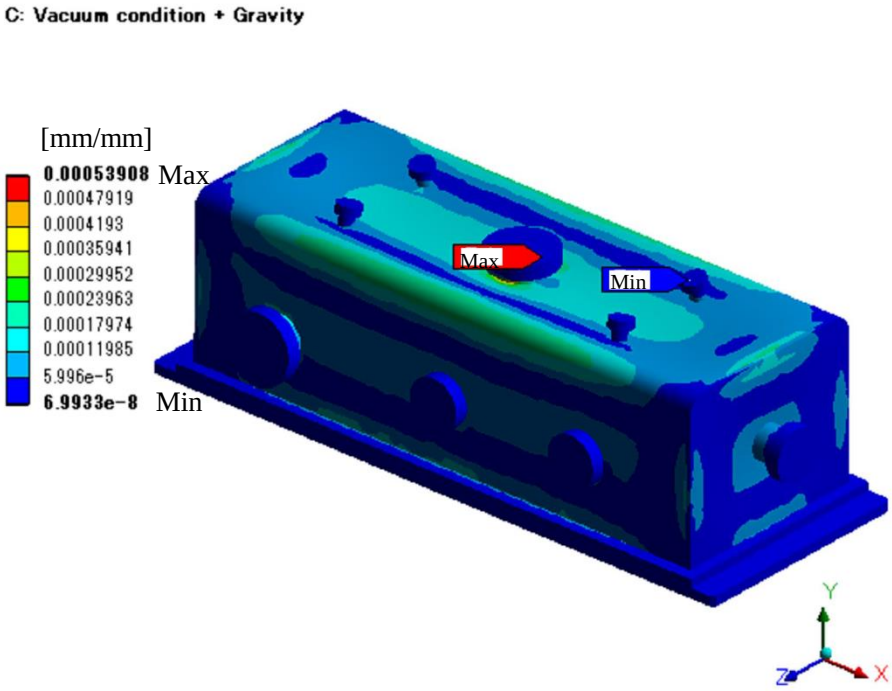

Fig. 4.3.1 Equivalent Elastic Strain profile

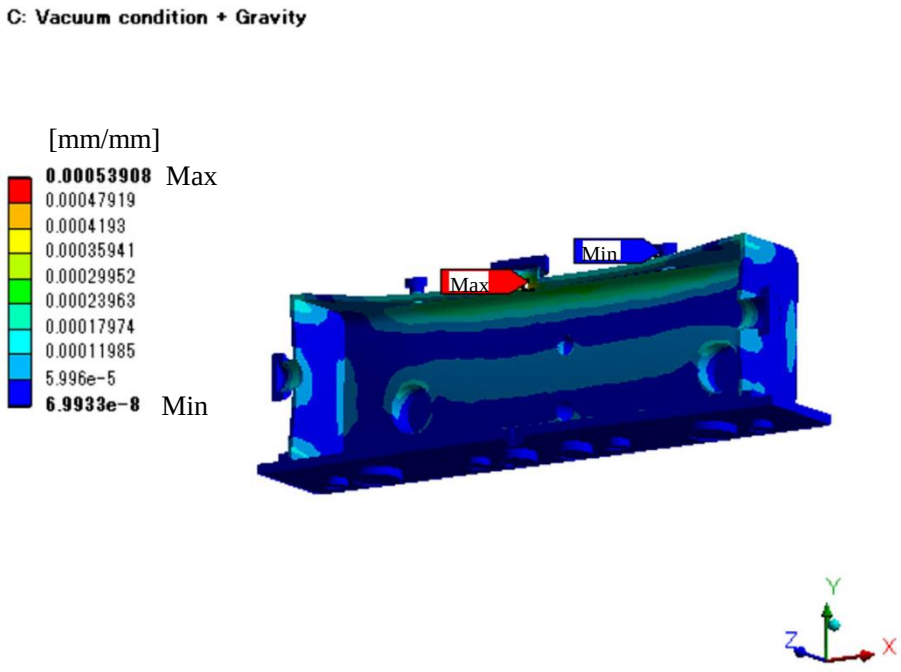

Fig. 4.3.2 Sectional view of Equivalent Elastic Strain profile

4. Calculation results

4.4 Deformation profile – High inner pressure condition

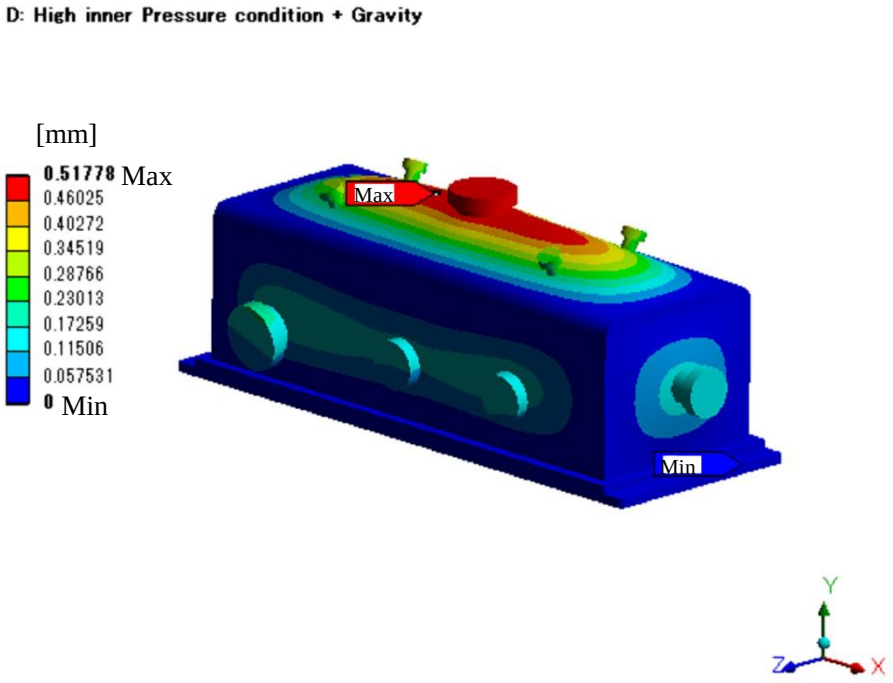

Fig. 4.4.1 Total deformation profile

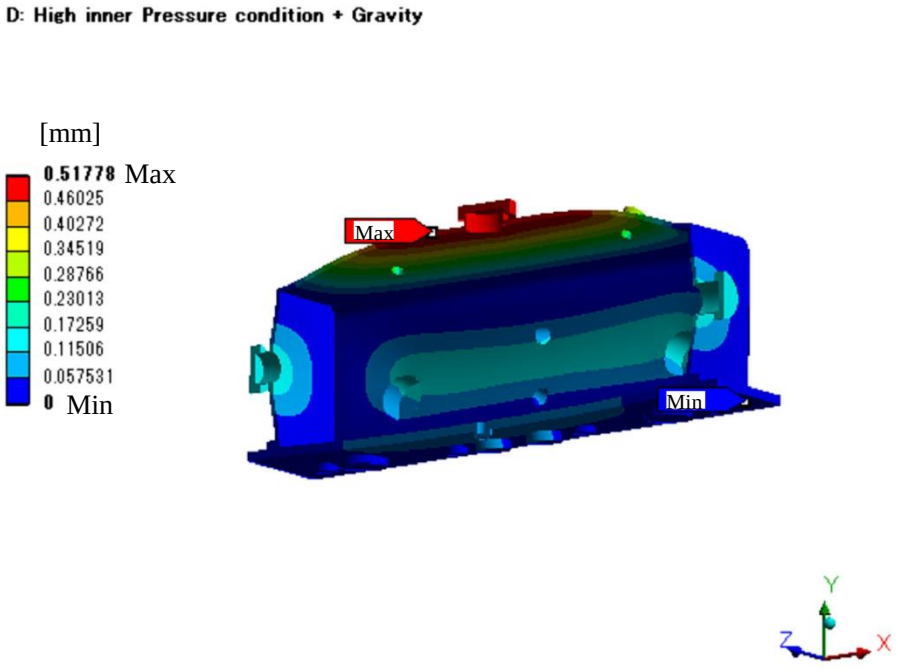

Fig. 4.4.2 Sectional view of total deformation profile

4.5 Stress profile – High inner pressure condition

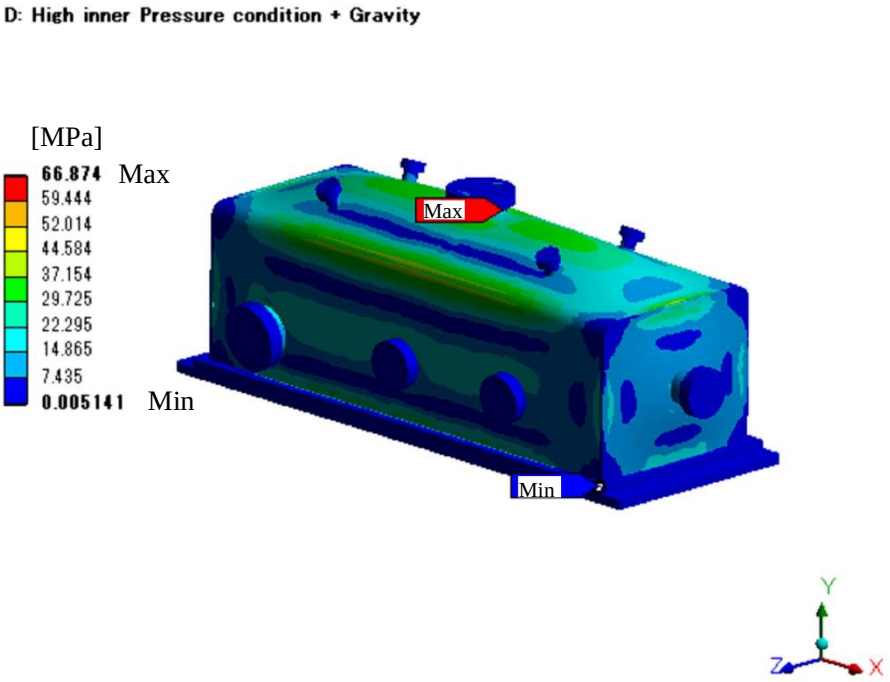

Fig. 4.5.1 Von Mises Stress profile

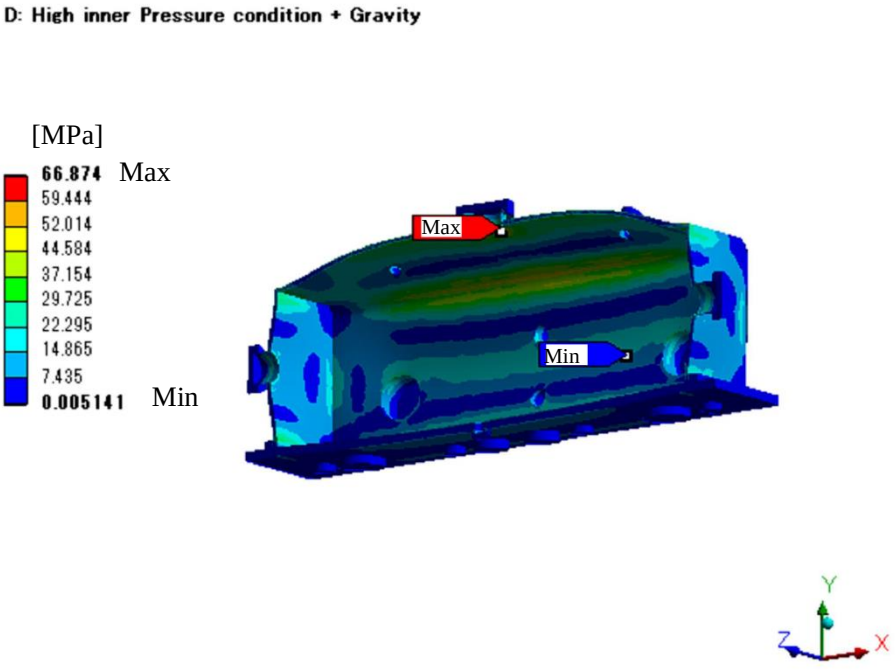

Fig. 4.5.2 Sectional view of Von Mises Stress profile

4.6 Elastic strain profile – High inner pressure

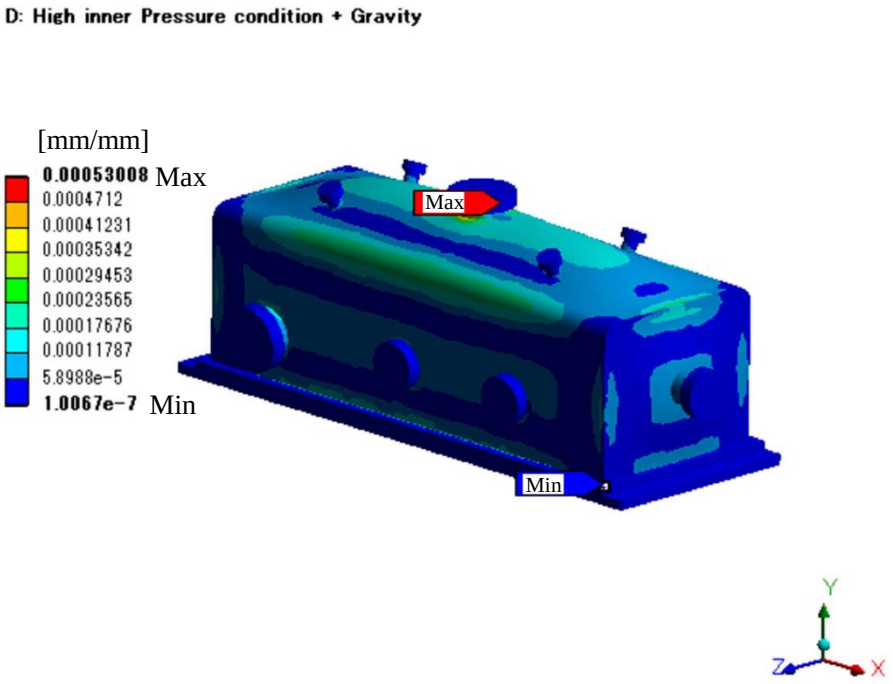

Fig. 4.6.1 Equivalent Elastic Strain profile

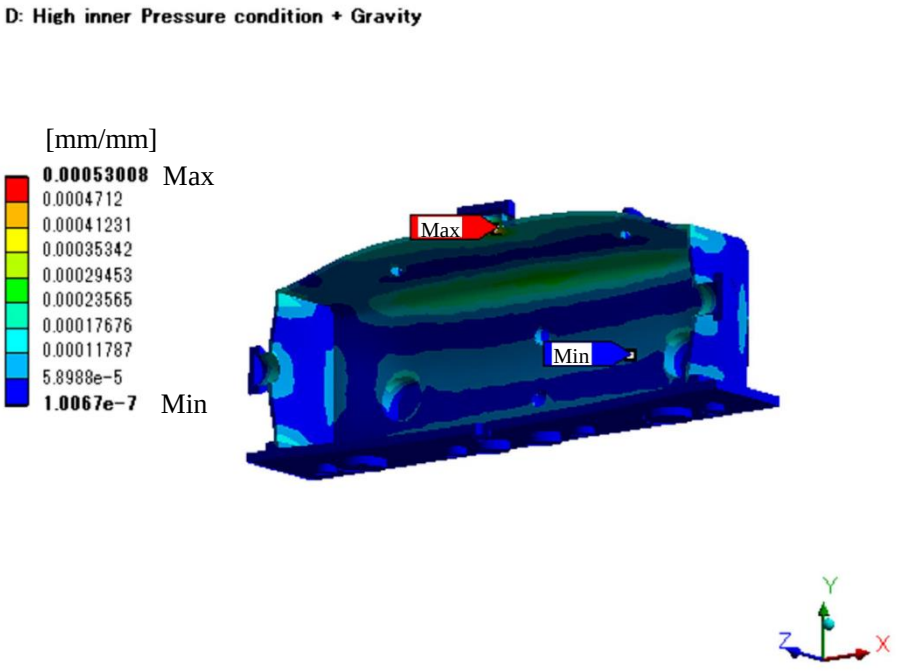

Fig. 4.6.2 Sectional view of Equivalent Elastic Strain profile

NSLS 2 FXI
Toroidal mirror
Vibration Analysis

- Eigenvalue analysis

TOYAMA Co., Ltd
Created by : Tsubota
Date : Nov. 26, 2015

1. Scope

This document covers the vibration analysis of the Toroidal Mirror(TM) of FXI beamline at the NSLS 2 to evaluate the eigenvalue. The analysis was done with using Finite Element Analysis software ANSYS 16.0 Mechanical.

The analysis results are shown in Table 1. The analysis results show the first order eigenvalue exceeds 50 Hz.

Mode Number	Frequency [Hz]
mode 1	**54.5**
mode 2	**86.8**
mode 3	**111.0**
mode 4	**114.6**
mode 5	**129.3**
mode 6	**134.4**

Table 1. Analysis results

2. The analysis model

Fig. 2.1 and Fig. 2.2 show the analysis model.

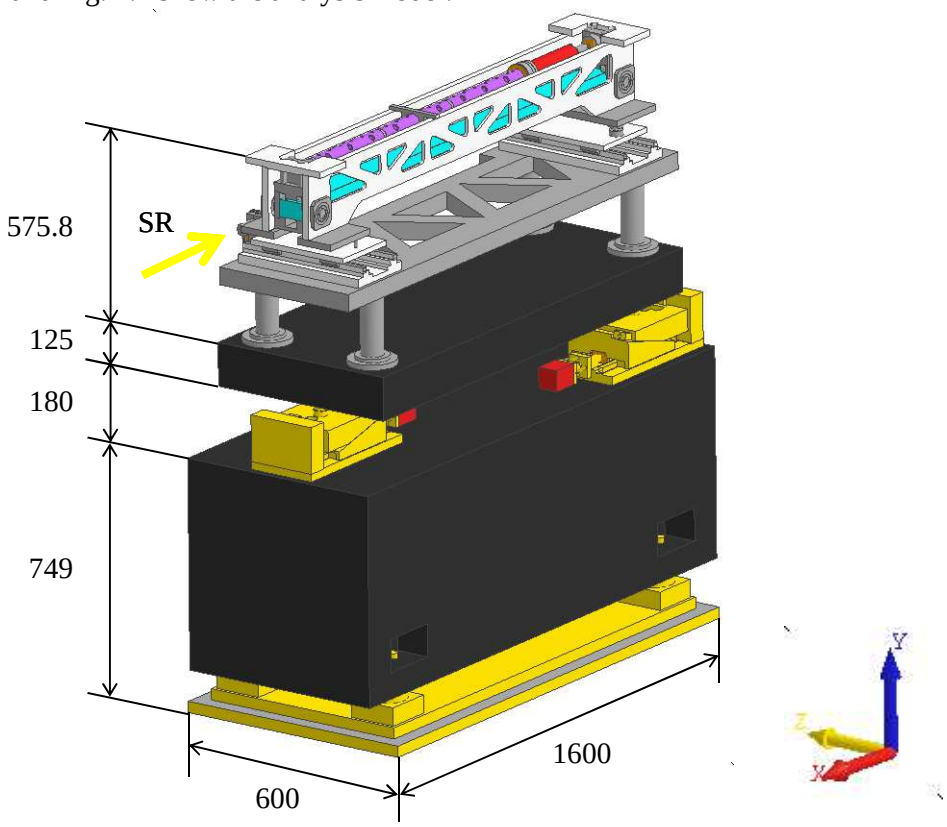

Fig. 2.1 Bird's eye view of TM

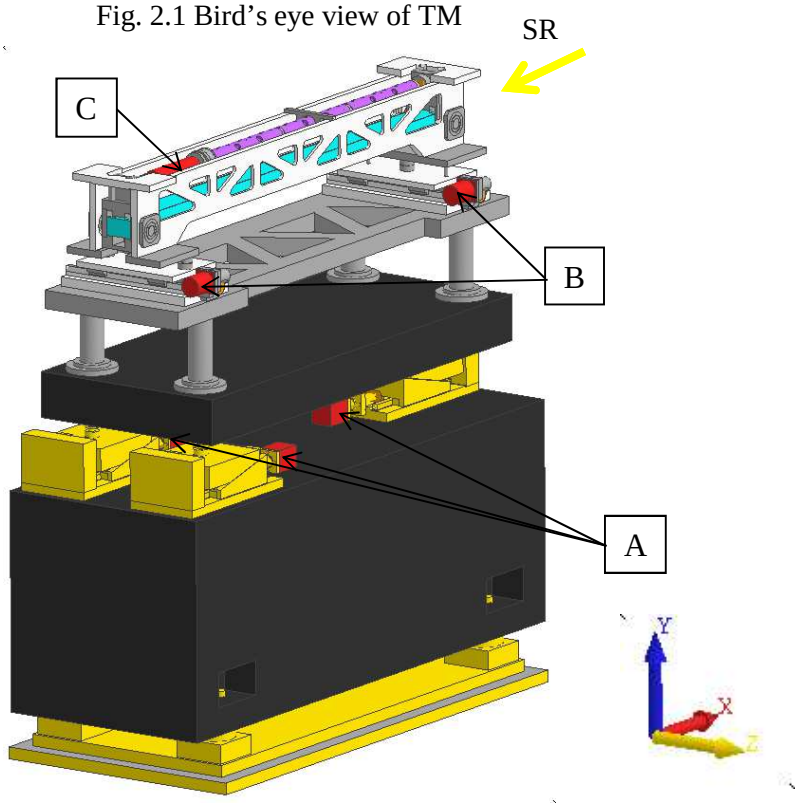

Fig. 2.2 Bird's eye view of TM (opposite side)

3. Physical properties of materials

Material	Density [kg/m^3]	Young's modulus [GPa]	Poisson's ratio	Color
Granite ※1	3000	128	0.13	Black
SUS304	7930	193	0.31	Grey
Silicon	2330	165	0.26	Blue
Steel	7900	206	0.30	Yellow
Super Invar	8150	136	0.35	Pink
Copper	8830	110	0.33	Orange
Motor	※2	193	0.31	Red
Aluminum	2690	71	0.33	White

Table 3.1 Physical Properties of materials

※1 Granite

The physical properties of granite is cited from the data sheet of sekigahara seisakujo.

※2 Motor

Table 3.2 show the each motor weight. The density of each motor in Fig 2.2 is adjusted to match these weight.

Motor	A	B	C
Mass [kg]	0.45	1.0	2.0

Table 3.2 The weight of the motors

4. Analysis Conditions

Fig. 4.1 and Fig. 4.2 show the support boundary condition and mesh model used for analysis.

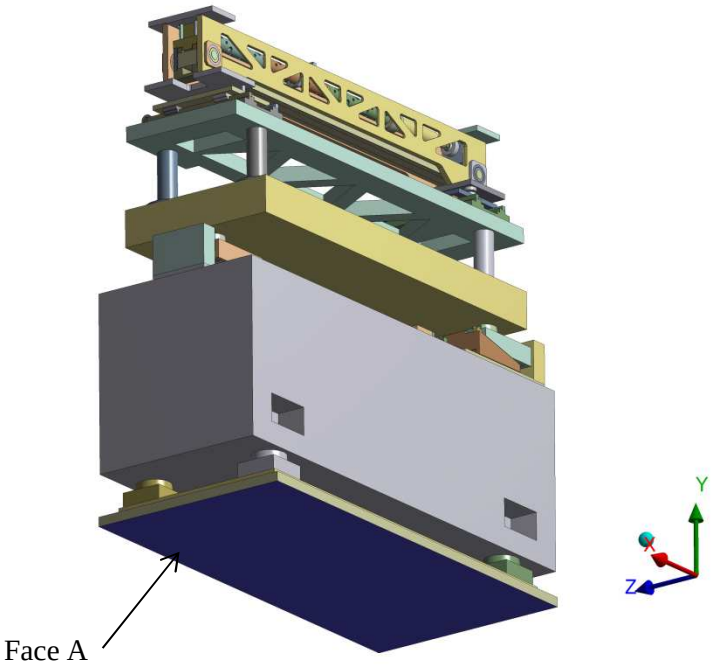

Face A (Fixed Support : X, Y, Z Fixed)

Fig. 4.1 Support boundary condition

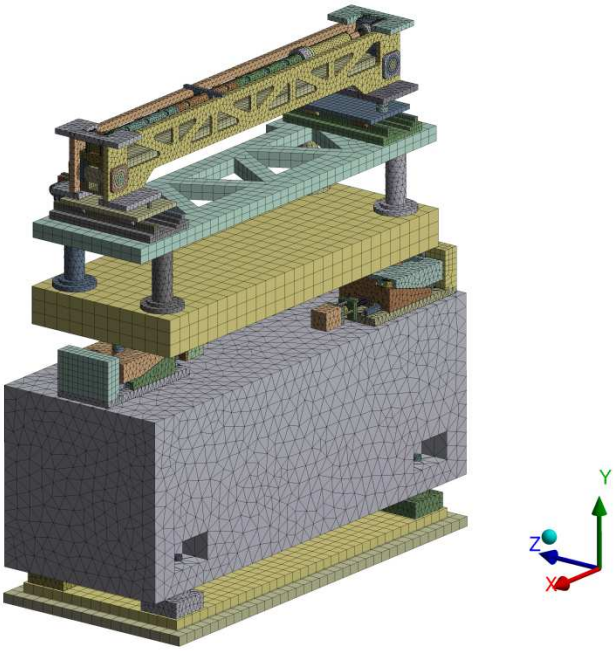

Fig. 4.2 Mesh model

5.1 Analsysi Results Summary

Axis	Mode	Frequency [Hz]	Participation Factor	Participation Factor Ratio	Effective Mass	Cumulative Mass Fraction
X	1	54.5	0.0002	0.0004	0.00000006	0.0000001
	2	86.8	0.0001	0.0002	0.00000001	0.0000002
	3	111.0	0.6664	**1.0000**	0.44406400	0.9417380
	4	114.6	-0.1655	0.2484	0.02739730	0.9998400
	5	129.3	0.0046	0.0069	0.00002085	0.9998850
	6	134.4	-0.0074	0.0111	0.00005442	**1.0000000**
Y	1	54.5	0.0020	0.0197	0.00000415	0.0003316
	2	86.8	0.0132	0.1272	0.00017384	0.0142044
	3	111.0	-0.0030	0.0285	0.00000875	0.0149028
	4	114.6	0.1037	**1.0000**	0.01074860	0.8726460
	5	129.3	-0.0054	0.0523	0.00002938	0.8749910
	6	134.4	-0.0396	0.3818	0.00156653	**1.0000000**
Z	1	54.5	0.2818	0.4108	0.07939700	0.1426650
	2	86.8	0.6859	**1.0000**	0.47041000	0.9879230
	3	111.0	0.0037	0.0054	0.00001348	0.9879470
	4	114.6	-0.0039	0.0057	0.00001522	0.9879740
	5	129.3	-0.0818	0.1192	0.00668899	0.9999930
	6	134.4	0.0019	0.0028	0.00000368	**1.0000000**
ROT-X	1	54.5	**393.9800**	0.4843	**155218.00000000**	0.1882030
	2	86.8	**813.5700**	**1.0000**	**661891.00000000**	0.9907460
	3	111.0	3.6314	0.0045	13.18740000	0.9907620
	4	114.6	-4.2585	0.0052	18.13470000	0.9907840
	5	129.3	**-87.1660**	0.1071	7597.84000000	0.9999970
	6	134.4	1.6923	0.0021	2.86397000	**1.0000000**
ROT-Y	1	54.5	-15.7270	0.1800	247.33300000	0.0177965
	2	86.8	**-87.3740**	**1.0000**	**7634.20000000**	0.5671060
	3	111.0	-2.0879	0.0239	4.35930000	0.5674200
	4	114.6	0.0761	0.0009	0.00579370	0.5674200
	5	129.3	-77.5350	0.8874	6011.60000000	0.9999780
	6	134.4	-0.5525	0.0063	0.30520600	**1.0000000**
ROT-Z	1	54.5	-0.3025	0.0004	0.09152660	0.0000001
	2	86.8	0.0757	0.0001	0.00573026	0.0000001
	3	111.0	**-859.8300**	**1.0000**	**739311.00000000**	0.9549540
	4	114.6	**185.1500**	0.2153	**34281.60000000**	0.9992340
	5	129.3	-4.8367	0.0056	23.39400000	0.9992650
	6	134.4	23.8590	0.0277	569.26600000	**1.0000000**

Table 5.1 Results Summary

5.2. Analysis Results

5.2.1 Mode_1 : Eigenvalue = 54.5 Hz

Fig. 5.2.1 shows the total deformation of mode 1. The analysis results value written in Fig. 5.2.1 indicate a relative value, so it has no physical meaning. Table 5.2.1 shows the detail of the vibration analysis results. Participation Factor and Effective Mass for each axis are shown in Table 5.2.1.

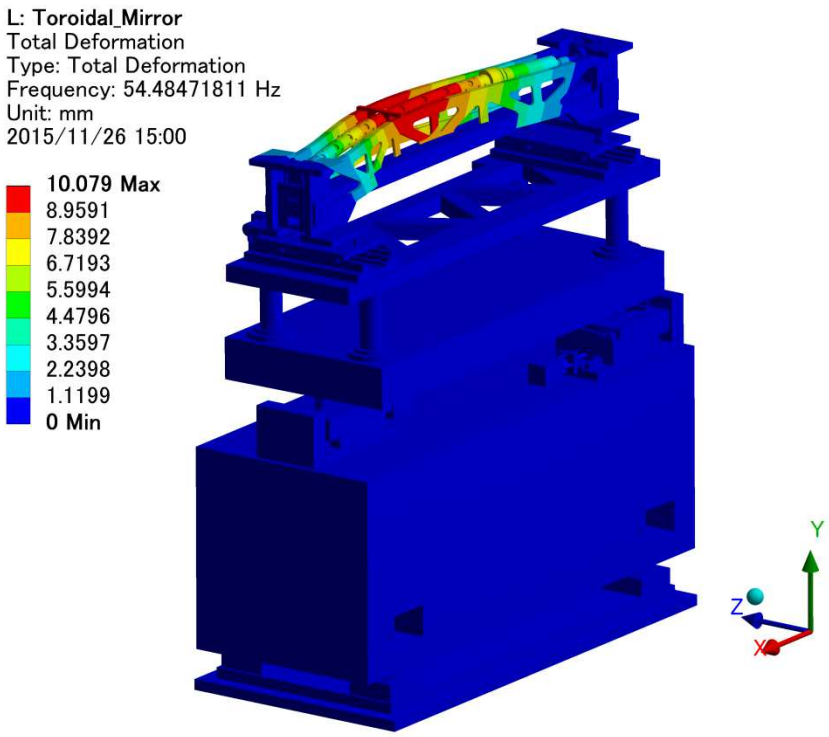

Fig. 5.2.1 Total deformation of mode 1

Axis	Participation Factor	Participation Factor Ratio	Effective Mass
X	0.0002	0.0004	0.00000006
Y	0.0020	0.0197	0.00000415
Z	0.2818	0.4108	0.07939700
ROT-X	**393.9800**	0.4843	**155218.00000000**
ROT-Y	-15.7270	0.1800	247.33300000
ROT-Z	-0.3025	0.0004	0.09152660

Table 5.2.1 Detail of the mode 1

5.2.2 Mode_2 : Eigenvalue = 86.8 Hz

Fig. 5.2.2 shows the total deformation of mode 2. The analysis results value written in Fig. 5.2.2 indicate a relative value, so it has no physical meaning. Table 5.2.2 shows the detail of the vibration analysis results. Participation Factor and Effective Mass for each axis are shown in Table 5.2.2.

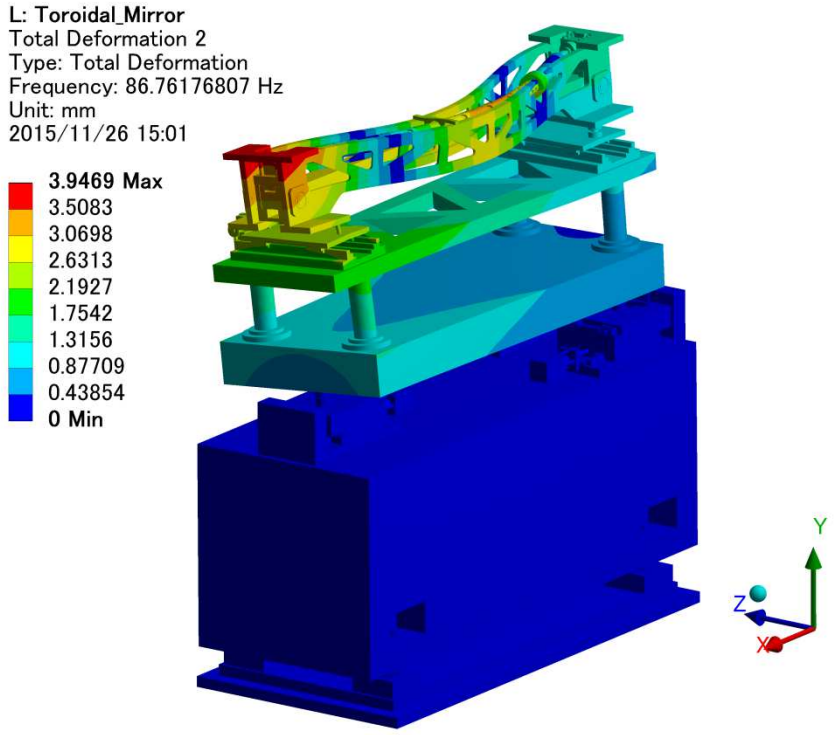

Fig. 5.2.2 Total deformation of mode 2

Axis	Participation Factor	Participation Factor Ratio	Effective Mass
X	0.0001	0.0002	0.00000001
Y	0.0132	0.1272	0.00017384
Z	0.6859	**1.0000**	0.47041000
ROT-X	**813.5700**	**1.0000**	**661891.00000000**
ROT-Y	**-87.3740**	**1.0000**	**7634.20000000**
ROT-Z	0.0757	0.0001	0.00573026

Table 5.2.2 Detail of the mode 2

5.2.3 Mode_3 : Eigenvalue = 111.0 Hz

Fig. 5.2.3 shows the total deformation of mode 3. The analysis results value written in Fig. 5.2.3 indicate a relative value, so it has no physical meaning. Table 5.2.3 shows the detail of the vibration analysis results. Participation Factor and Effective Mass for each axis are shown in Table 5.2.3.

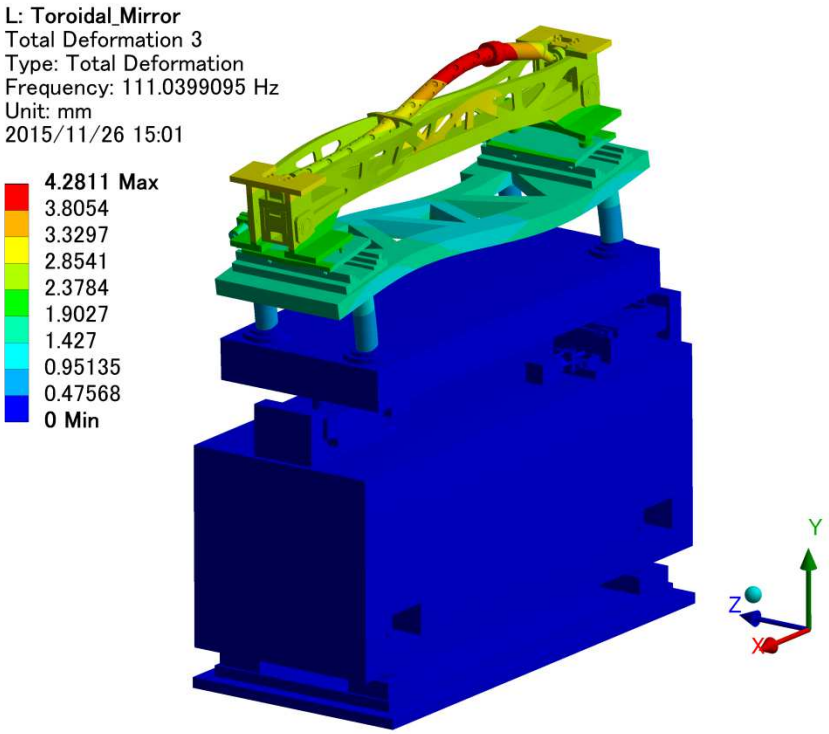

Fig. 5.2.3 Total deformation of mode 3

Axis	Participation Factor	Participation Factor Ratio	Effective Mass
X	0.6664	**1.0000**	0.44406400
Y	-0.0030	0.0285	0.00000875
Z	0.0037	0.0054	0.00001348
ROT-X	3.6314	0.0045	13.18740000
ROT-Y	-2.0879	0.0239	4.35930000
ROT-Z	**-859.8300**	**1.0000**	**739311.00000000**

Table 5.2.3 Detail of the mode 3

5.2.4 Mode_4 : Eigenvalue = 114.6 Hz

Fig. 5.2.4 shows the total deformation of mode 4. The analysis results value written in Fig. 5.2.4 indicate a relative value, so it has no physical meaning. Table 5.2.4 shows the detail of the vibration analysis results. Participation Factor and Effective Mass for each axis are shown in Table 5.2.4.

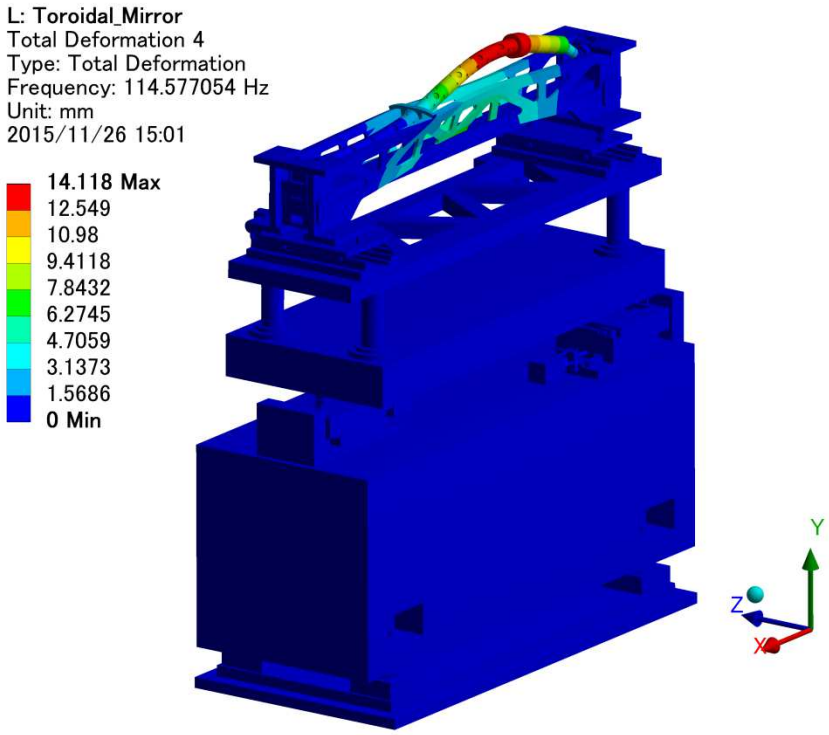

Fig. 5.2.4 Total deformation of mode 4

Axis	Participation Factor	Participation Factor Ratio	Effective Mass
X	-0.1655	0.2484	0.02739730
Y	0.1037	**1.0000**	0.01074860
Z	-0.0039	0.0057	0.00001522
ROT-X	-4.2585	0.0052	18.13470000
ROT-Y	0.0761	0.0009	0.00579370
ROT-Z	**185.1500**	0.2153	**34281.60000000**

Table 5.2.4 Detail of the mode 4

5.2.5 Mode_5 : Eigenvalue = 129.3 Hz

Fig. 5.2.5 shows the total deformation of mode 5. The analysis results value written in Fig. 5.2.5 indicate a relative value, so it has no physical meaning. Table 5.2.5 shows the detail of the vibration analysis results. Participation Factor and Effective Mass for each axis are shown in Table 5.2.5.

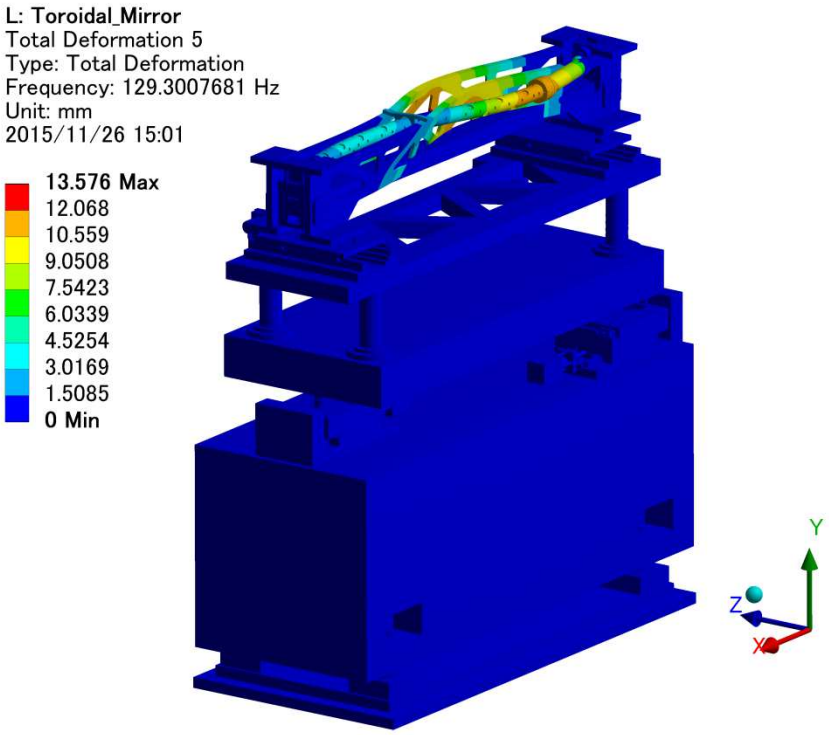

Fig. 5.2.5 Total deformation of mode 5

Axis	Participation Factor	Participation Factor Ratio	Effective Mass
X	0.0046	0.0069	0.00002085
Y	-0.0054	0.0523	0.00002938
Z	-0.0818	0.1192	0.00668899
ROT-X	**-87.1660**	0.1071	7597.84000000
ROT-Y	-77.5350	0.8874	6011.60000000
ROT-Z	-4.8367	0.0056	23.39400000

Table 5.2.5 Detail of the mode 5

5.2.6 Mode_6 : Eigenvalue = 134.4 Hz

Fig. 5.2.6 shows the total deformation of mode 6. The analysis results value written in Fig. 5.2.6 indicate a relative value, so it has no physical meaning. Table 5.2.6 shows the detail of the vibration analysis results. Participation Factor and Effective Mass for each axis are shown in Table 5.2.6.

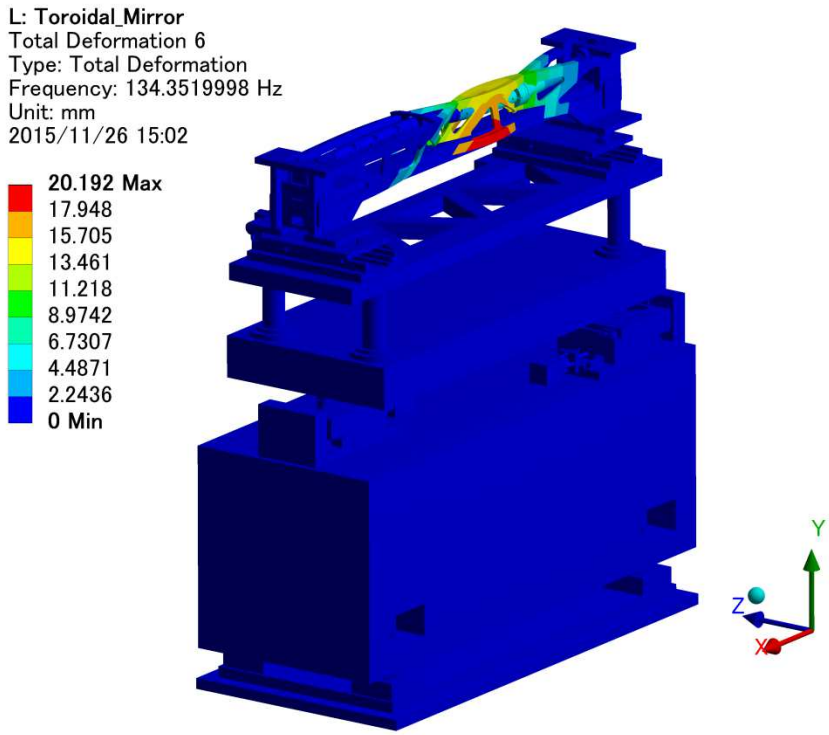

Fig. 5.2.6 Total deformation of mode 6

Axis	Participation Factor	Participation Factor Ratio	Effective Mass
X	-0.0074	0.0111	0.00005442
Y	-0.0396	0.3818	0.00156653
Z	0.0019	0.0028	0.00000368
ROT-X	1.6923	0.0021	2.86397000
ROT-Y	-0.5525	0.0063	0.30520600
ROT-Z	23.8590	0.0277	569.26600000

Table 5.2.6 Detail of the mode 6

FXI Photon Delivery System (Vacuum)

December 3, 2015
TOYAMA Co., Ltd.
Tomoaki Takahashi

1. Overview

This document reports the calculation results of pressure for FXI Photon Delivery System. In this case, we calculate 5 sections (following) in FXI beam line.

- Section 1: Upstream and Downstream section of DPA (Differential Pumping Assy.) , FM, BC (Mechanical Design: October 28, 2015 ver.)
- Section 2: Collimating Mirror (Mechanical Design: October 26, 2015 ver.)
- Section 3: DCM (Double Crystal Monochromator) (Mechanical Design ver.: November 4, 2015)
- Section 4: Toroidal Mirror (Mechanical Design ver.: November 2, 2015)
- Section 5: Transport Pipe (Mechanical Design ver.: October 23, 2015)

Fig.1 shows 5 sections and vacuum components in FXI beam line.

We calculate each inner pressure using follow baking conditions.

- Hard bake (150 deg. C): Apply to Section 1 and 5.
- Soft bake (less than 80 deg. C): Apply to Section 2 and 4.
- Cooling (LN_2 Temperature): Apply to Section 3.

Table 1 shows results of calculation. It is expected that Section 2 and 4 pressures is higher than specification pressures ($5x10^{-6}$ Pa).

Table 1 Calculation results

Section	Specifications pressure	Calculated pressure	Page.
1	5 $x10^{-6}$ Pa ($5x10^{-8}$ mbar)	$7.5x10^{-7}$ Pa ($7.5x10^{-9}$ mbar)	2
2	1 $x10^{-6}$ Pa ($1x10^{-8}$ mbar)	$3.7x10^{-6}$ Pa ($3.7x10^{-8}$ mbar)	3
3	$5x10^{-6}$ Pa ($5x10^{-8}$ mbar)	$4.7x10^{-6}$ Pa ($4.7x10^{-8}$ mbar) at pumping 100 h	4-5
4	1 $x10^{-6}$ Pa ($1x10^{-8}$ mbar)	$3.7x10^{-6}$ Pa ($3.7x10^{-8}$ mbar)	6
5	1 $x10^{-6}$ Pa ($1x10^{-8}$ mbar)	Better than $8.5x10^{-8}$ Pa ($8.5x10^{-10}$ mbar)	7

2. Calculation assumptions

We assume that the chamber is pumped by constant pumping speed in this calculation, and leak of vacuum vessel is enough small (<1x10^{-11} Pa・m^3/s). The following shows the assumptions used for the calculation of each section. We use safety factor = 2.

2-1. Section 1 - Upstream and Downstream section of DPA (Differential Pumping Assy.), FM, BC-

Fig.2 shows vacuum system of Section 1, and effective pumping speed of each parts.

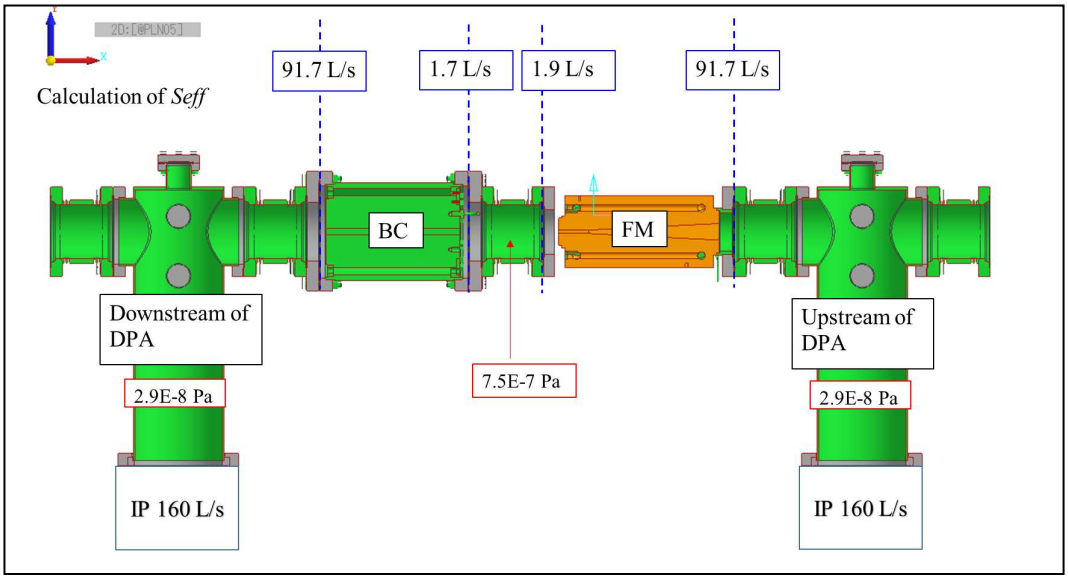

Fig.2 Vacuum system and effective pumping speed of each parts in Section 1.

Table 2 shows each materials, surface area and outgassing rate in Section 1. Using Table 2 data and follow equation, we calculate ultimate pressure P [Pa].

$$P = \frac{Q_{total}}{S_{eff}}, \quad Q_{total} = \sum Aq$$

$$P = \frac{Q_{total}}{S_{eff}} = \frac{1.4\times10^{-9}}{0.004} = 7.5\times10^{-7} \quad \text{[Pa]}$$

Table 2 Materials, surface area and outgassing rate in Section 1.

Material	Surface area A [m^2]	Ref.	Outgassing rate of after baking q_S [Pa・m^3/s/m^2]	Baking condition
Stainless steel	1.3	a	9.8x10^{-10}	150 deg. C × 24 h
Copper	-	a	1.2x10^{-10}	150 deg. C × 24 h
Glidcop	0.019	-		Assumption to Copper×2
Tungsten	0.012	-	9.8x10^{-9}	Assumption to Stainless steel ×10

a. Outgassing data of Vacuum Hand Book

2-2. Section 2 - Collimating Mirror –

Considering heatproof temperature of encoder, we assume 80 deg. C baking. Table 3 shows each materials, surface area and outgassing rate in Section 2. Using Table 3 data and follow equation, we calculate ultimate pressure P [Pa]. In this Section, ultimate pressure depends on outgassing from encoder.

$$P = \frac{Q_{total}}{S_{eff}}, \quad Q_{total} = \sum Aq$$

$$P = \frac{Q_{total}}{S_{eff}} = \frac{6.9\times10^{-7}}{0.372} = 3.7\times10^{-6} \quad \text{[Pa]}$$

Table 3 Materials, surface area and outgassing rate in Section 2.

Material	Surface area [m^2]	Ref.	Outgassing rate of after baking [$Pa\cdot m^3/s/m^2$]	Baking condition
Stainless steel	5.0	b	2.6×10^{-8}	80 deg. C × 185 h
Aluminum	2.3	b	6.7×10^{-10}	80 deg. C × 185 h
Copper	2.3	b	8.0×10^{-10}	80 deg. C × 185 h
PEEK	0.0056	b	3.3×10^{-8}	80 deg. C × 185 h
Motor	Number of motor = 2	b	6.6×10^{-9}	80 deg. C × 185 h
Encoder	Number of encoder = 2	b	2.7×10^{-7}	80 deg. C × 185 h
Kapton cable	Length of cable = 62 m	b	1.6×10^{-10}	80 deg. C × 185 h

b. Outgassing data in ***TOYAMA***

2-3. Section 3 -DCM (Double Crystal Monochromator)-

In this Section, we consider cryo-effect by LN_2 cooling.

We calculate pressure of DCM by following assumptions.

- The first, second crystal and copper cooling plate are cooled.
- Total surface area A of crystal and cooling plate = 0.1 [m^2].
- Cooled surface is a cryo-pump which has ideal pumping speed S (follow equation).

$$S = \frac{1}{4}\bar{v}A,$$

$$\bar{v} = 146\sqrt{\frac{T}{M}}$$

T = Room temperature

M = Molecular weight of air

$$S = 12 \quad [m^3/s] = 12{,}000\ [L/s].$$

Fig.3 shows pumping time dependence of inner pressure of DCM.

In Fig.3,

- From atmospheric pressure ($1x10^5$) to $1x10^{-3}$ Pa: non-cooling (S_{eff} = 386 L/s)
- $1x10^{-3}$ Pa: start cooling (S = 12,000 L/s).

Pressure of DCM reach $5x10^{-6}$ Pa within pumping time 100 hour.

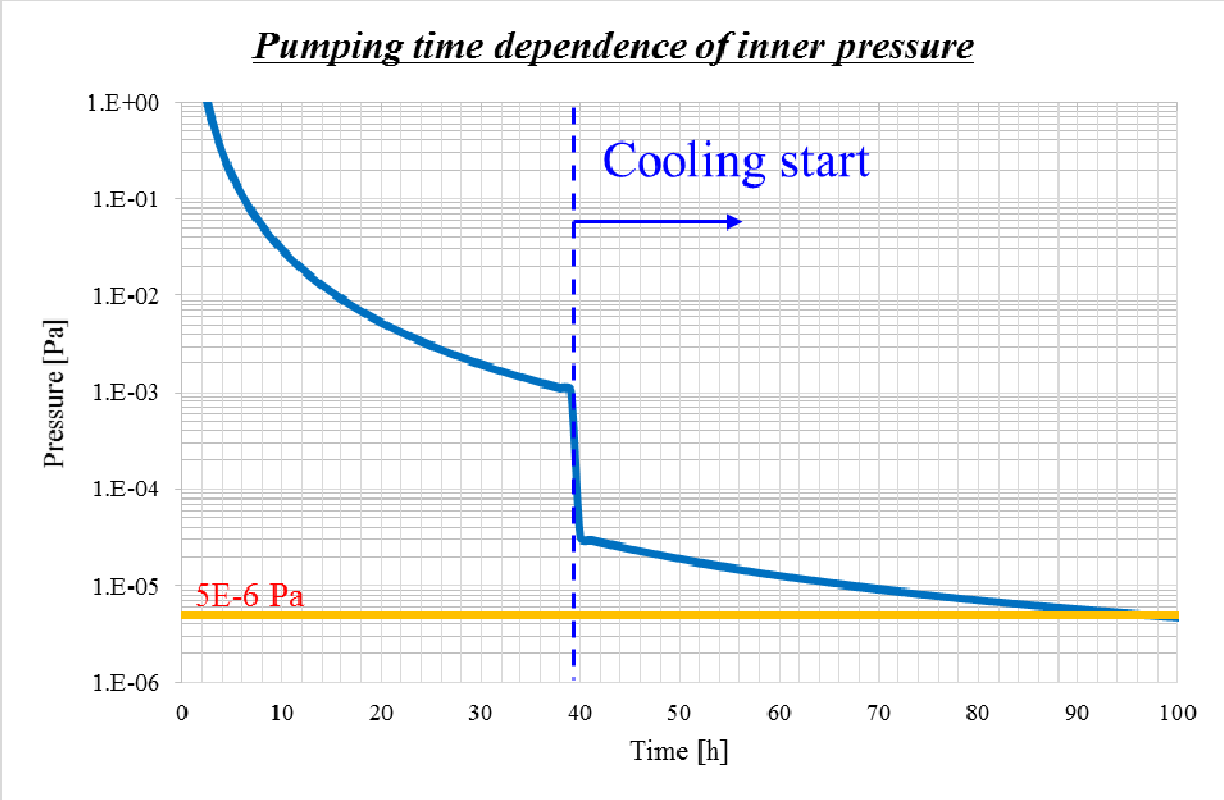

Table 4 shows each materials, surface area and outgassing rate in Section 3.

Material	Surface area [m^2]	Ref.	Notes
Stainless steel	4.6	a	Electrolytic polishing
Glass	0.07	a	
Cooper	0.1	a	Oxygen free high conductivity
PEEK	0.03	a	
Motor	Number of motor = 4.	b	
Encoder	Number of encoder = 4.	-	
Kapton cable	Length of cable = 62 m	b	

a. Outgassing data of Vacuum Hand Book

b. Outgassing data in ***TOYAMA***

2-4. Section 4 - Toroidal Mirror –

Same as Section 2.

Table 3 shows each materials, surface area and outgassing rate in Section 4. Using Table 4 data and follow equation, we calculate ultimate pressure P [Pa].

$$P = \frac{Q_{total}}{S_{eff}}, \quad Q_{total} = \sum Aq$$

$$P = \frac{Q_{total}}{S_{eff}} = \frac{6.8\times10^{-7}}{0.372} = 3.7\times10^{-6} \quad \text{[Pa]}$$

Table 5 Materials, surface area and outgassing rate in Section 4.

Material	Surface area [m^2]	Ref.	Outgassing rate of after baking [$Pa\cdot m^3/s/m^2$]	Baking condition
Stainless steel	4.7	b	2.6E-8	80 deg. C × 185 h
Aluminum	1.3	b	6.7E-10	80 deg. C × 185 h
Copper	0.2	b	8.0E-10	80 deg. C × 185 h
PEEK	0.0056	b	3.3E-8	80 deg. C × 185 h
Motor	Number of motor = 2	b	6.6E-9	80 deg. C × 185 h
Encoder	Number of encoder = 2	b	2.7E-7	80 deg. C × 185 h
Kapton cable	Length of cable = 62 m	b	1.6E-10	80 deg. C × 185 h

b. Outgassing data in ***TOYAMA***

2-5. Section 5 - Transport Pipe –

Fig.4 shows subsection for Section 5 vacuum calculate. Section 5-3 is same vacuum system as Section 5-2.

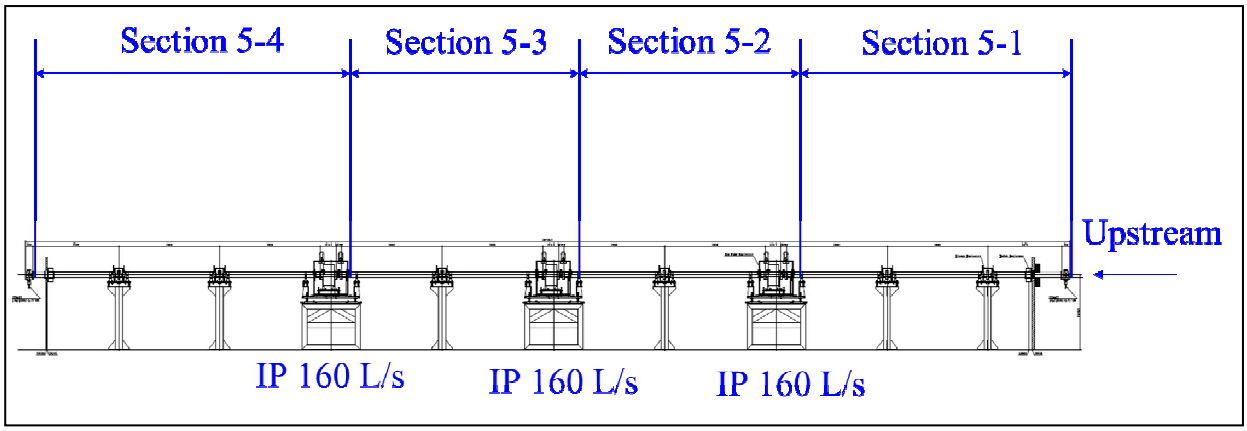

Fig.4 Subsection for Section 5 vacuum calculate.

Table 5 shows materials, surface area, outgassing rate, effective pumping speed and pressure in Section 5.

Using Table 5 data and follow equation, we calculate ultimate pressure P [Pa].

$$P = \frac{Q_{total}}{S_{eff}}, \quad Q_{total} = \sum Aq$$

Table 5 Surface area, outgassing rate, effective pumping speed and pressure in Section 5.

Section	Surface area [m^2]	Ref.	Stainless steel outgassing rate of after baking [Pa・m^3/s/m^2]	Baking condition	S_{eff} [L/s]	Pressure [Pa]
5-1	1.3	a	9.8E-10	150 deg. C × 24 h	42	6.4E-8
5-2	1.5	a	9.8E-10	150 deg. C × 24 h	156	1.9E-8
5-3	1.5	a	9.8E-10	150 deg. C × 24 h	156	1.9E-8
5-4	1.8	a	9.8E-10	150 deg. C × 24 h	42	8.5E-8

a. Outgassing data of Vacuum Hand Book

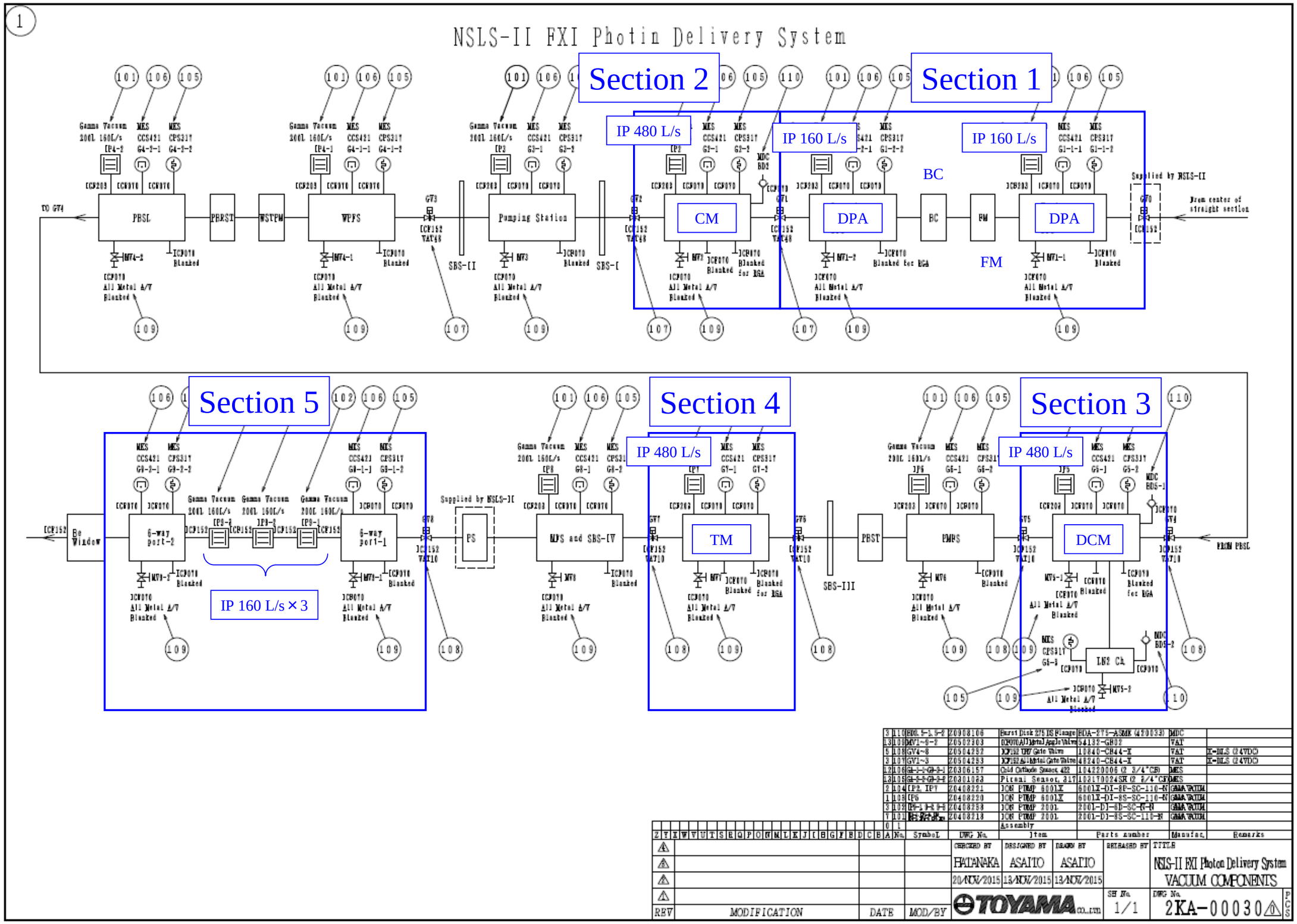

Fig.1 Section and vacuum components

NSLS 2 FXI PPS Cooling Water Calculation

1. The entire model diagram

Fig. 1 shows the entire model diagram used for calculation. The pipe length written in Fig. 1 shows assumed value.
Fig. 2 shows pressure loss of flexible tube. We assumed the flexible tube diameter is 1/2 inch.
Table 1 shows the set position of each components.
Table 2 shows the physical properties used for calculation.
Table 3 shows the calculation process table. The calculation detail is shown in the table.
We assumed the pressure loss of Fixed Mask and WBS/PBM are
three times larger because we plan to insert a wire coil into the pipe.
Each Flexible Tubes are calculated as the Pressure Loss of 0.004 MPa/m.
We assumed the pressure loss of Flow meter is 0.012 MPa.

	Position(m)
Fixed Mask	27.4
WBS/PBM	32.40
PBST	35.50

Table 1. Components positions

	Unit	Value
Water Temperature	degrees C	29.5
Water Temperature	K	302.7
Density of saturated water	kg/m^3	995.8
Kinematic viscosity	m^2/s	8.09E-07
Prandtl number		5.47
Thermal conductivity	W/m・K	0.614
Specific Heat	kJ/kg・K	4.18
Pressure Loss (Flexible Tube) (6 L/min)	MPa/m	0.004

Table 2. Physical properties used for calculation

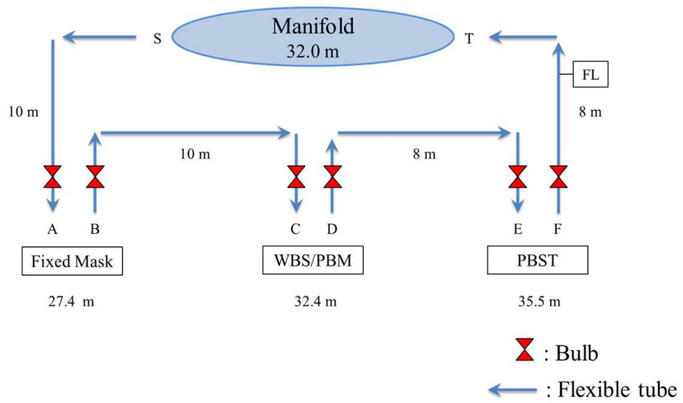

Fig. 1 Entire model Diagram

Pressure Loss of Flexible Tube (/m)
Water (20 degrees C)

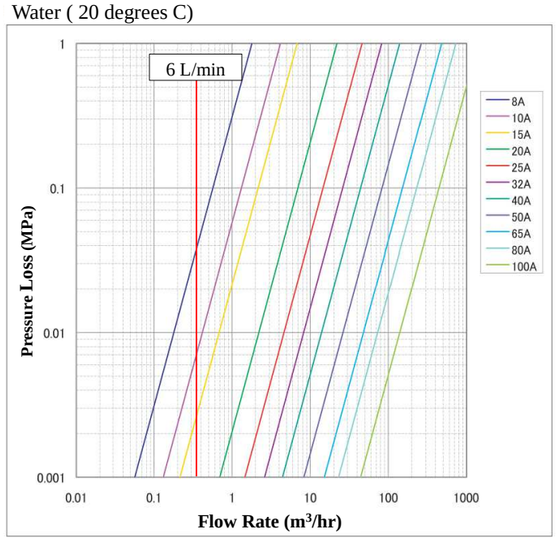

Fig .2 Pressure Loss of Flexible Tube (cited from Osaka Rasenkan Kogyo Catalogue)

			Pressure Loss Calculation																				Convection	
Channel Number	No.	Name	Outer and Inner diameter	Pipe Inner Diameter	Flow Rate	Flow Velocity	Reynolds Number	Pipe Friction Coefficient	u^2/(2*g)	Pipe Length	Pressure Loss (Length)	Bent	Loss Factor	Pressure Loss (Bent)	Expand or shrink	Loss Factor	Pressure Loss	Valve (cock)	Loss Factor	Pressure Loss (Valve)	Sum of Pressure Loss	Sub Total Pressure Loss	Nu Number Dittus	Convection Coefficient (Dittus)
		Unit		mm	L/min	m/s				m	MPa			MPa			MPa			MPa	MPa	MPa		W/m^2・K
		Calculation Formula		D				λ	A	W	λ×A×W/D	X	ζ_1	A×X×ζ_1	Z	ζ_3	A×Z×ζ_3	Z	ζ_3	A×Z×ζ_3				
1		S-A (Flexible Tube)	15A(1/2 inch)	12	6.00	0.88	13120.9	2.92E-02	3.89E-04	10	4.00E-02	0	1.17	0.00E+00	1	0.4444	1.73E-04	1	0.05	1.95E-05	0.0402			
																						0.0402		
	1	Fixed Mask	Φ10	10	6.00	1.27	15745.1	2.78E-02	8.07E-04	3	2.02E-02	18	1.17	1.70E-02	1	0.0934	7.54E-05	0	0.05	0.00E+00	0.0373		103.4	6352.9
		B-C (Flexible Tube)	15A(1/2 inch)	12	6.00	0.88	13120.9	2.92E-02	3.89E-04	10	4.00E-02	0	1.17	0.00E+00	1	0.4444	1.73E-04	2	0.05	3.89E-05	0.0402			
																						0.0775		
	2	WBS/PBM	Φ10	10	6.00	1.27	15745.1	2.78E-02	8.07E-04	3.2	2.15E-02	20	1.17	1.89E-02	1	0.0934	7.54E-05	0	0.05	0.00E+00	0.0405		103.4	6352.9
		D-E (Flexible Tube)	15A(1/2 inch)	12	6.00	0.88	13120.9	2.92E-02	3.89E-04	8	3.20E-02	0	1.17	0.00E+00	1	0.4444	1.73E-04	2	0.05	3.89E-05	0.0322			
																						0.0727		
	3	PBST	Φ10×Φ8	8	6.00	1.99	19681.3	2.62E-02	1.97E-03	2	1.29E-02	10	1.17	2.31E-02	1	0.3086	6.08E-04	0	0.05	0.00E+00	0.0366		123.6	9493.1
		F-T (Flexible Tube)	15A(1/2 inch)	12	6.00	0.88	13120.9	2.92E-02	3.89E-04	8	3.20E-02	0	1.17	0.00E+00	0	0.4444	0.00E+00	1	0.05	1.95E-05	0.0320			
		Flow meter																			0.0120			
																						0.0806		

Channel Total Pressure Loss	0.271	MPa	@ 6 L/min
	39.3	psi	

Table 3. Calculation Process Table

Fig. 1 Over View of the cooling pipe

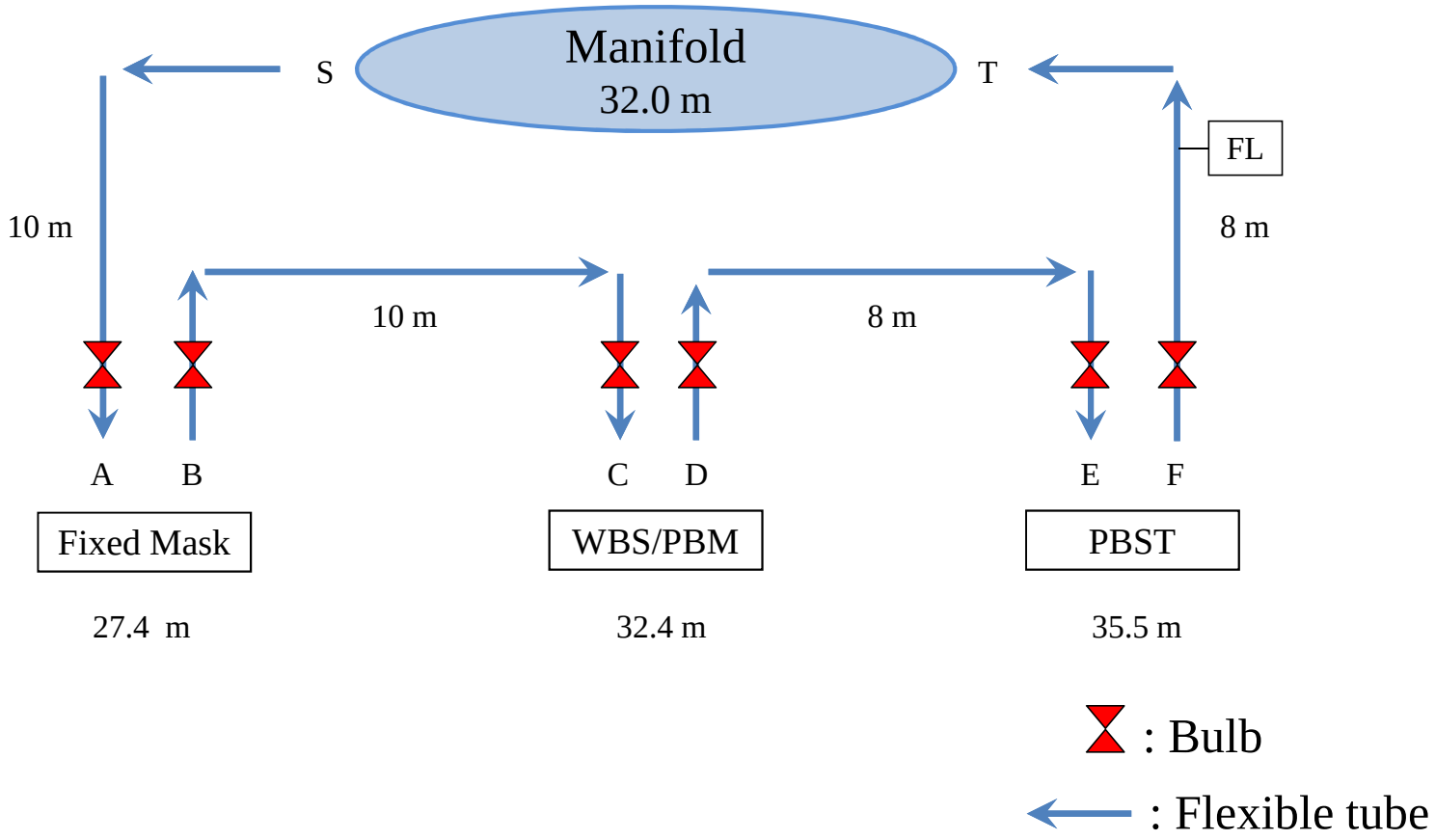

Fig.2 Reference Data (Cited from technical data of Osaka Rasenkan Kogyo co., LTD.)

Water (20 ℃)

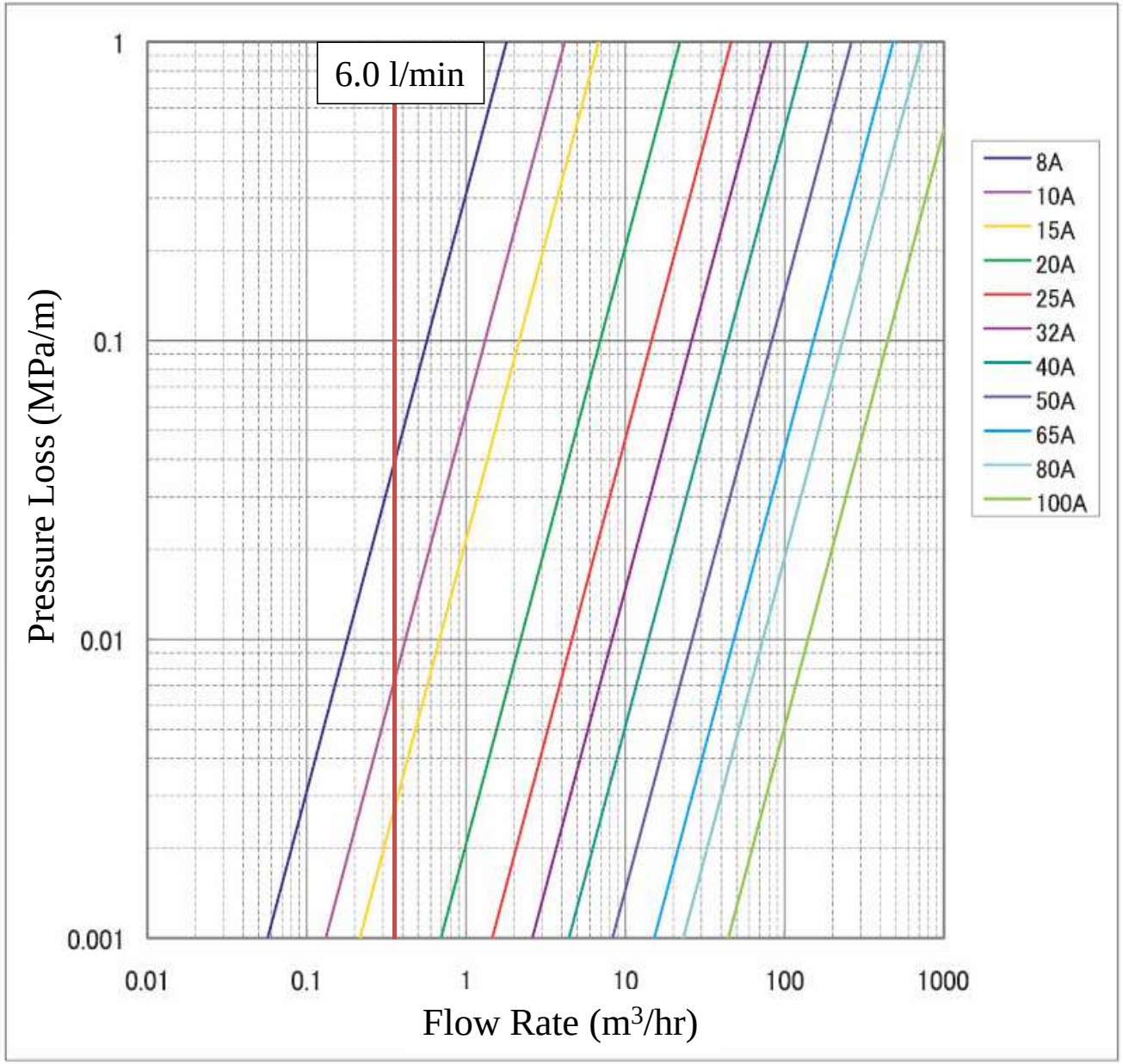

*Since this is a calculated value, actual products may deviate from these value.

Fig. 3 Over View of the each components

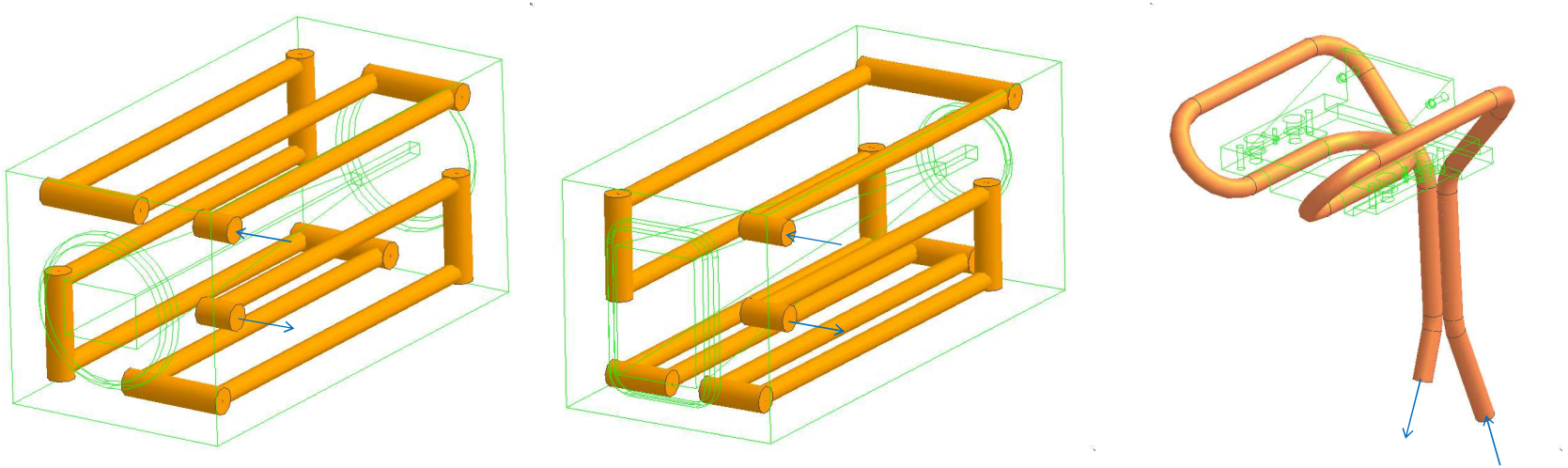

Fixed Mask WBS/PBM PBST

NSLS 2 FXI EPS Cooling Water Calculation

1. The entire model diagram

Fig. 1 shows the entire model diagram used for calculation. The pipe length written in Fig. 1 shows assumed value.
Fig. 2 shows pressure loss of flexible tube. We assumed the flexible tube diameter is 1/2 inch.
Table 1 shows the set position of each components.
Table 2 shows the physical properties used for calculation.
Table 3 shows the calculation process table. The calculation detail is shown in the table.
Each Flexible Tubes are calculated as the Pressure Loss of 0.003 MPa/m.
We assumed the pressure loss of Flow meter is 0.012 MPa.

	Position(m)
CM disaster mask	29.5
WPFS	31.9
PBSL	33.4
PMFS	35.2

Table 1. Components positions

	Unit	Value
Water Temperature	degrees C	29.5
Water Temperature	K	302.7
Density of saturated water	kg/m^3	995.8
Kinematic viscosity	m^2/s	8.09E-07
Prandtl number		5.47
Thermal conductivity	W/m・K	0.614
Specific Heat	kJ/kg・K	4.18
Pressure Loss (Flexible Tube) (1.5 L/min)	MPa/m	0.003

Table 2. Physical properties used for calculation

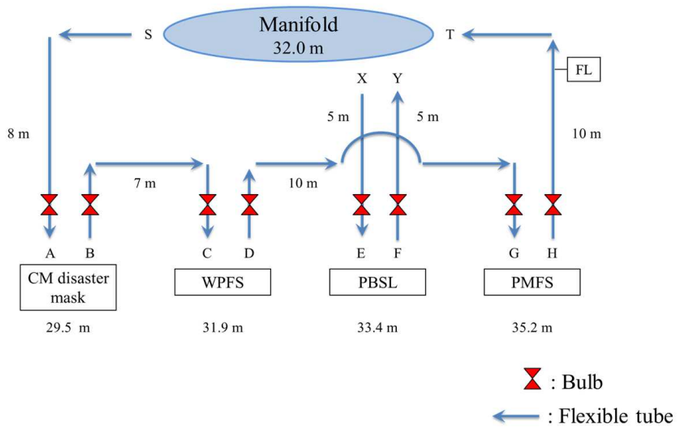

Fig. 1 Entire model Diagram

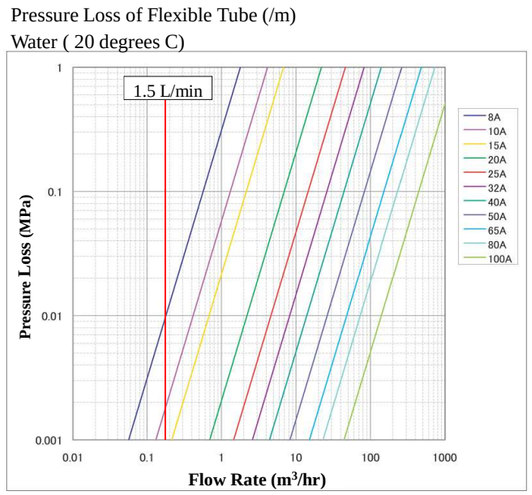

Fig .2 Pressure Loss of Flexible Tube (cited from Osaka Rasenkan Kogyo Catalogue)

			Pressure Loss Calculation																				Convection	
Channel Number	No.	Name	Outer and Inner diameter	Pipe Inner Diameter	Flow Rate	Flow Velocity	Reynolds Number	Pipe Friction Coefficient	u^2/(2*g)	Pipe Length	Pressure Loss (Length)	Bent	Loss Factor	Pressure Loss (Bent)	Expand or shrink	Loss Factor	Pressure Loss	Valve (cock)	Loss Factor	Pressure Loss (Valve)	Sum of Pressure Loss	Sub Total Pressure Loss	Nu Number Dittus	Convection Coefficient (Dittus)
		Unit		mm	L/min	m/s				m	MPa			MPa			MPa			MPa	MPa	MPa		W/m^2・K
		Calculation Formula		D				λ	A	W	λ×A×W/D	X	ζ_1	A×X×ζ_1	Z	ζ_2	A×Z×ζ_2	Z	ζ_3	A×Z×ζ_3				
1		S-A (Flexible Tube)	15A(1/2 inch)	12	1.50	0.22	3280.2	4.42E-02	2.43E-05	8	2.40E-02	0	1.17	0.00E+00	1	0.444	1.08E-05	1	0.05	1.22E-06	0.0240			
																						0.0240		
	1	CM disaster mask	Φ8×Φ6	6	1.50	0.88	6560.4	3.55E-02	3.89E-04	4	9.21E-03	12	1.17	5.47E-03	1	0.563	2.19E-04	0	0.05	0.00E+00	0.0149		51.3	5255.9
		B-C (Flexible Tube)	15A(1/2 inch)	12	1.50	0.22	3280.2	4.42E-02	2.43E-05	7	2.10E-02	0	1.17	0.00E+00	1	0.444	1.08E-05	2	0.05	2.43E-06	0.0210			
																						0.0359		
	2	WPFS	Φ6×Φ4	4	1.50	1.99	9840.7	3.16E-02	1.97E-03	2	3.11E-02	10	1.17	2.31E-02	1	0.79	1.56E-03	0	0.05	0.00E+00	0.0557		71.0	10904.7
		D-G (Flexible Tube)	15A(1/2 inch)	12	1.50	0.22	3280.2	4.42E-02	2.43E-05	10	3.00E-02	0	1.17	0.00E+00	1	0.444	1.08E-05	2	0.05	2.43E-06	0.0300			
																						0.0857		
	4	PMFS	Φ6×Φ4	4	1.50	1.99	9840.7	3.16E-02	1.97E-03	2	3.11E-02	10	1.17	2.31E-02	1	0.79	1.56E-03	0	0.05	0.00E+00	0.0557		71.0	10904.7
		H-T (Flexible Tube)	15A(1/2 inch)	12	1.50	0.22	3280.2	4.42E-02	2.43E-05	10	3.00E-02	0	1.17	0.00E+00	0	0.444	0.00E+00	1	0.05	1.22E-06	0.0300			
		Flow meter																			0.0120			
																						0.0977		

Channel Total Pressure Loss	0.243	MPa	@ 1.5 L/min
	35.3	psi	

Channel Number	No.	Name	Outer and Inner diameter	Pipe Inner Diameter	Flow Rate	Flow Velocity	Reynolds Number	Pipe Friction Coefficient	u^2/(2*g)	Pipe Length	Pressure Loss (Length)	Bent	Loss Factor	Pressure Loss (Bent)	Expand or shrink	Loss Factor	Pressure Loss (Bent)	Valve (cock)	Loss Factor	Pressure Loss (Bent)	Sum of Pressure Loss	Sub Total Pressure Loss	Nu Number Dittus	Convection Coefficient (Dittus)
		Unit		mm	L/min	m/s				m	MPa			MPa			MPa			MPa	MPa	MPa		W/m^2・K
		Calculation Formula		D				λ	A	W	λ×A×W/D	X	ζ_1	A×X×ζ_1	Z	ζ_2	A×Z×ζ_2	Z	ζ_3	A×Z×ζ_3				
2		X-E (Flexible Tube)	15A(1/2 inch)	12	1.50	0.22	3280.2	4.42E-02	2.43E-05	5	1.50E-02	0	1.17	0.00E+00	1	0.444	1.08E-05	1	0.05	1.22E-06	0.0150			
	3	PBSL	Φ6×Φ4	4	1.50	1.99	9840.7	3.16E-02	1.97E-03	8	1.24E-01	40	1.17	9.22E-02	1	0.79	1.56E-03	0	0.05	0.00E+00	0.2182		71.0	10904.7
		F-Y (Flexible Tube)	15A(1/2 inch)	12	1.50	0.22	3280.2	4.42E-02	2.43E-05	5	1.50E-02	0	1.17	0.00E+00	0	0.444	0.00E+00	1	0.05	1.22E-06	0.0150			
															.							0.2483		

Channel Total Pressure Loss	0.248	MPa	@ 1.5 L/min
	36.0	psi	

Table 3. Calculation Process Table

Fig. 1 Over View of the cooling pipe

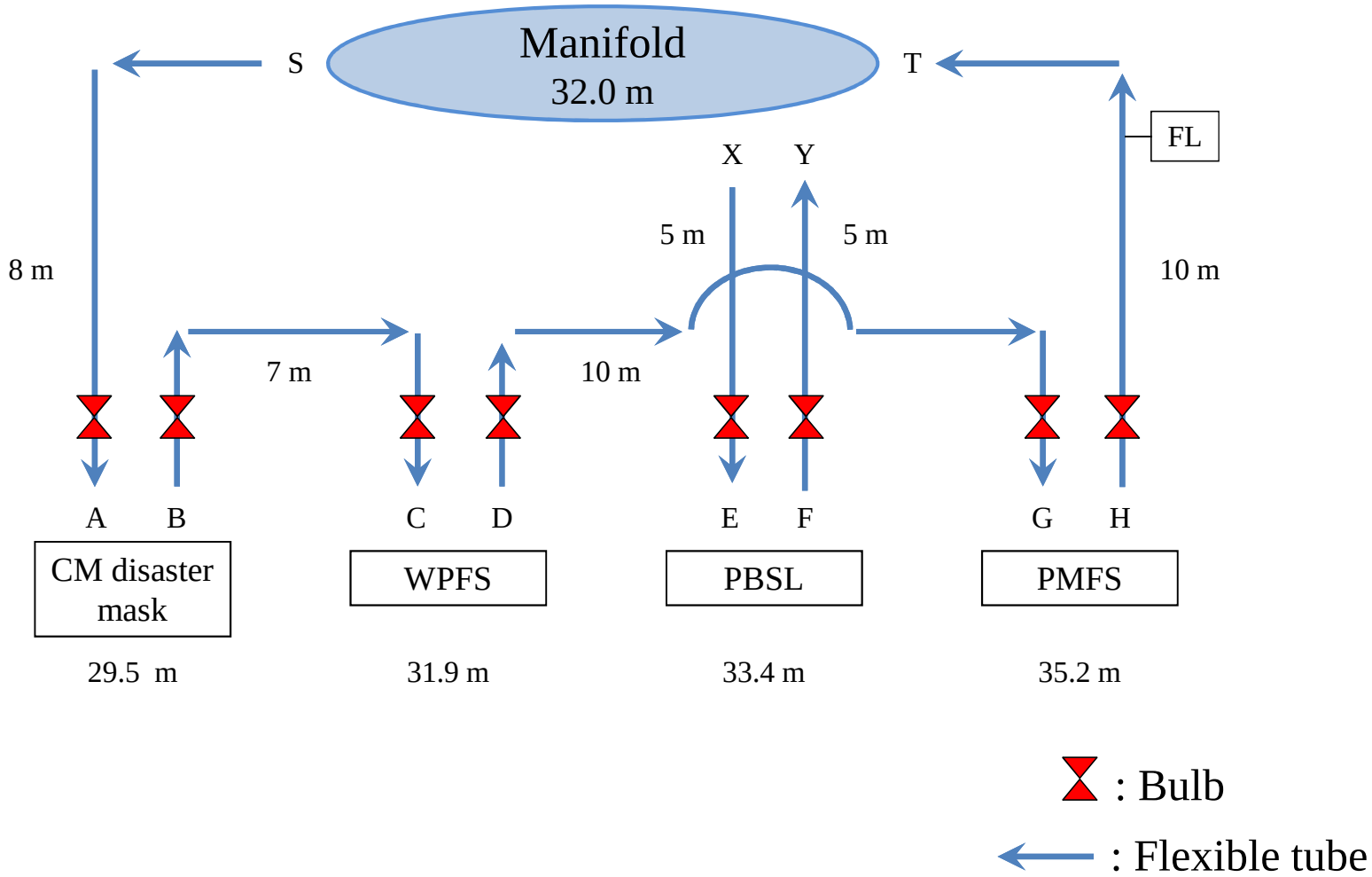

Fig. 2 Reference Data (Cited from technical data of Osaka Rasenkan Kogyo co., LTD.)

Water (20 ℃)

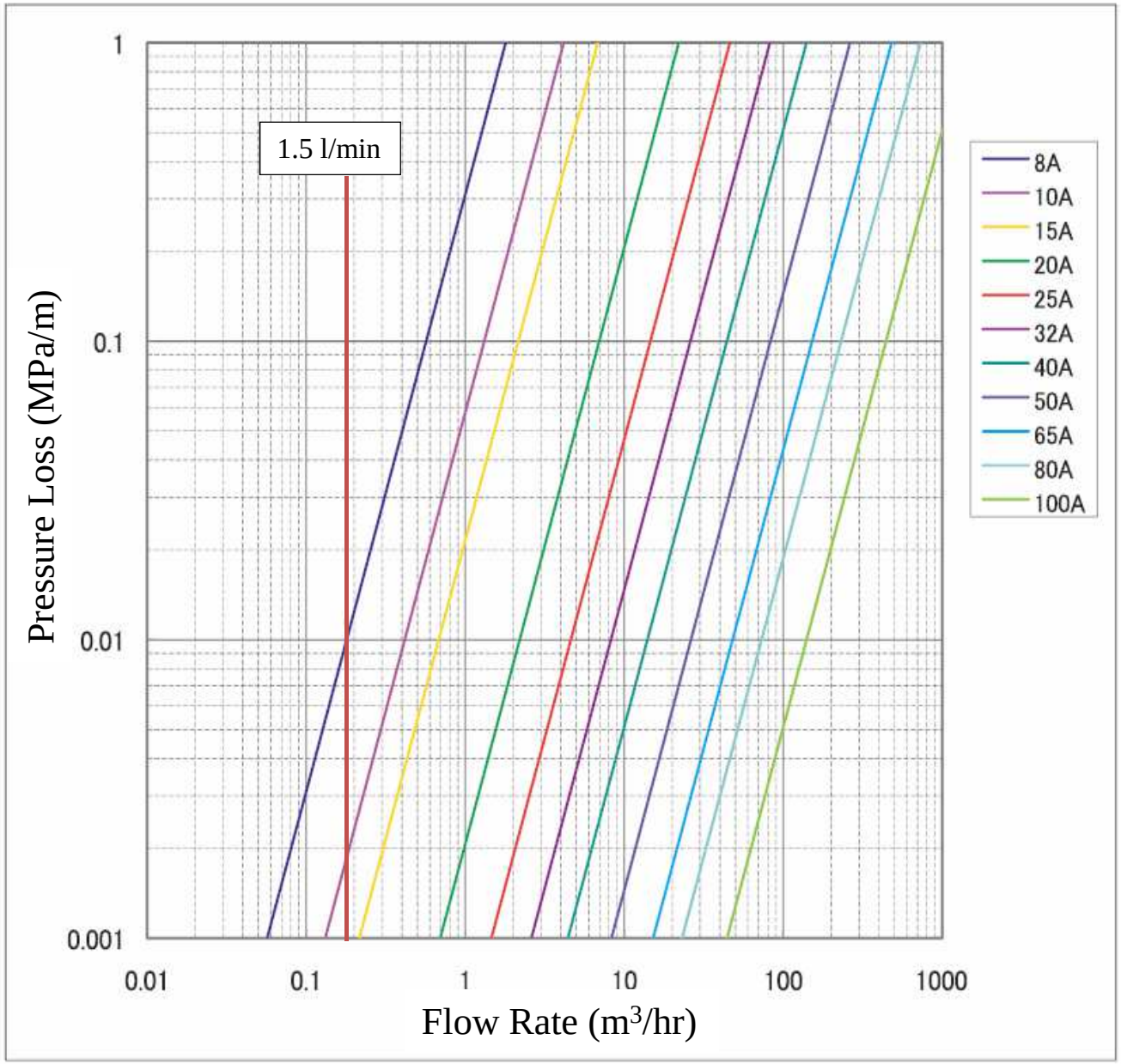

*Since this is a calculated value, actual products may deviate from these value.

Fig. 3 Over View of the each components

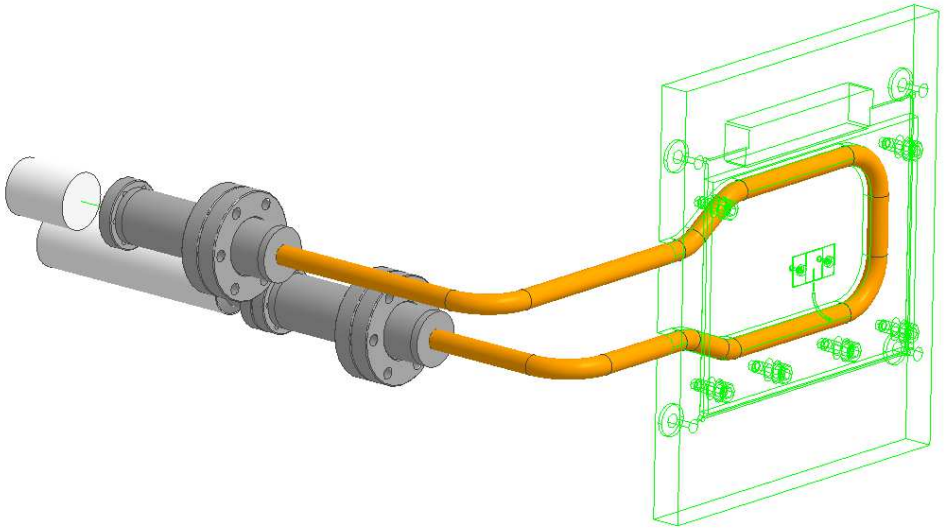

CM disaster mask

WPFS

Fig. 3 Over View of the each components

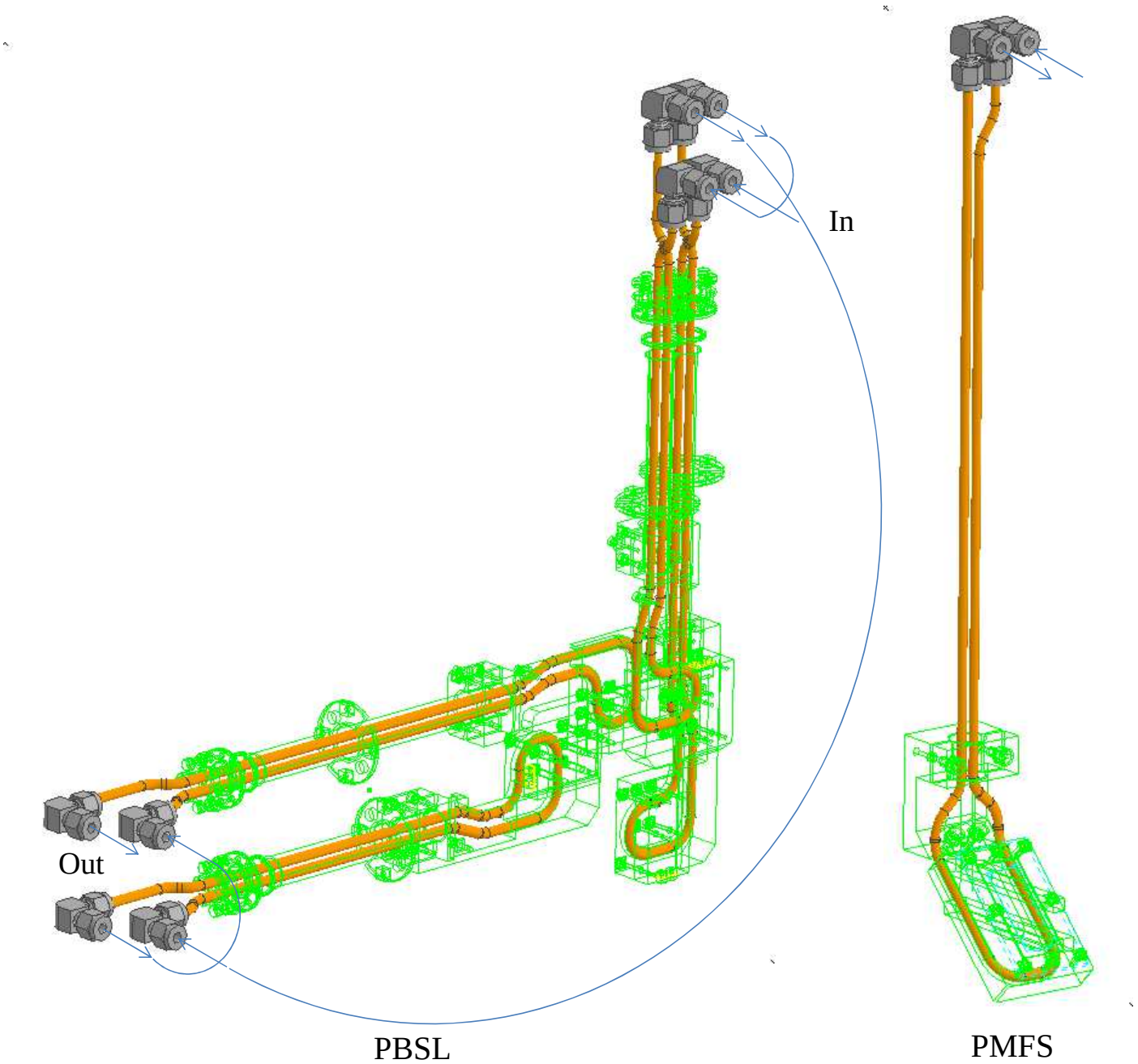

NSLS 2 FXI Collimating mirror Cooling Water Calculation

1. The entire model diagram

Fig. 1 shows the entire model diagram used for calculation. The pipe length written in Fig. 1 is assuming value.
Fig. 2 shows pressure loss of flexible tube. We assumed the flexible tube diameter is 1/2 inch.
Table 1 shows the set position of collimating mirror (CM).
Table 2 shows the physical properties used for calculation.
Table 3 shows the calculation process table. The calculation detail is shown in the table.
Each Flexible Tubes are calculated as the Pressure Loss of 0.004 MPa/m.
We assumed the pressure loss of Flow meter is 0.012 MPa.

	Position(m)
Collimating mirror	29.5

Table 1. Components positions

	Unit	Value
Water Temperature	degrees C	29.5
Water Temperature	K	302.7
Density of saturated water	kg/m^3	995.8
Kinematic viscosity	m^2/s	8.09E-07
Prandtl number		5.47
Thermal conductivity	W/m・K	0.614
Specific Heat	kJ/kg・K	4.18
Pressure Loss (Flexible Tube) (6 L/min)	MPa/m	0.004

Table 2. Physical properties used for calculation

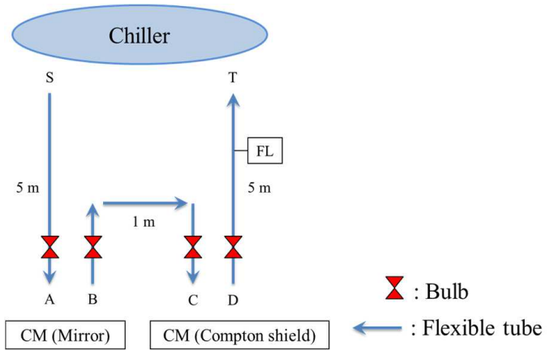

Fig. 1 Entire model Diagram

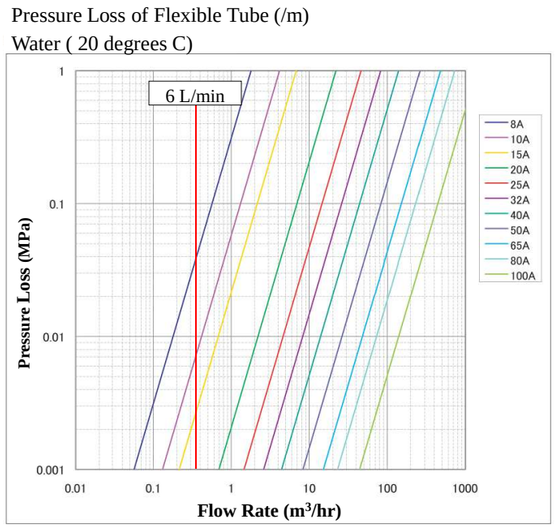

Fig .2 Pressure Loss of Flexible Tube (cited from Osaka Rasenkan Kogyo Catalogue)

			Pressure Loss Calculation																				Convection	
Channel Number	No.	Name	Outer and Inner diameter	Pipe Inner Diameter	Flow Rate	Flow Velocity	Reynolds Number	Pipe Friction Coefficient	u^2/(2*g)	Pipe Length	Pressure Loss (Length)	Bent	Loss Factor	Pressure Loss (Bent)	Expand or shrink	Loss Factor	Pressure Loss	Valve (cock)	Loss Factor	Pressure Loss (Valve)	Sum of Pressure Loss	Sub Total Pressure Loss	Nu Number Dittus	Convection Coefficient (Dittus)
		Unit		mm	L/min	m/s				m	MPa			MPa			MPa			MPa	MPa	MPa		W/m^2・K
		Calculation Formula		D				λ	A	W	λ×A×W/D	X	ζ_1	A×X×ζ_1	Z	ζ_3	A×Z×ζ_3	Z	ζ_3	A×Z×ζ_3				
1		S-A (Flexible Tube)	15A(1/2 inch)	12	6.00	0.88	13120.9	2.92E-02	3.89E-04	5	2.00E-02	0	1.17	0.00E+00	1	0.4444	1.73E-04	1	0.05	1.95E-05	0.0202			
																						0.0202		
	1	CM (Mirror)	Φ10×Φ8	8	6.00	1.99	19681.3	2.62E-02	1.97E-03	18	3.49E-01	30	1.17	6.92E-02	1	0.3086	6.08E-04	0	0.05	0.00E+00	0.4186		123.6	9493.1
		B-C (Flexible Tube)	15A(1/2 inch)	12	6.00	0.88	13120.9	2.92E-02	3.89E-04	1	4.00E-03	0	1.17	0.00E+00	1	0.4444	1.73E-04	2	0.05	3.89E-05	0.0042			
																						0.4228		
	2	CM (Compton shield)	Φ10×Φ8	8	6.00	1.99	19681.3	2.62E-02	1.97E-03	10	6.46E-02	25	1.17	5.76E-02	1	0.3086	6.08E-04	0	0.05	0.00E+00	0.1229		123.6	9493.1
		D-T (Flexible Tube)	15A(1/2 inch)	12	6.00	0.88	13120.9	2.92E-02	3.89E-04	5	2.00E-02	0	1.17	0.00E+00	0	0.4444	0.00E+00	1	0.05	1.95E-05	0.0200			
		Flow meter																			0.0120			
																						0.1549		

Channel Total Pressure Loss	0.598	MPa	@ 6 L/min
	86.7	psi	

Table 3. Calculation Process Table

Fig. 1 Over View of the cooling pipe

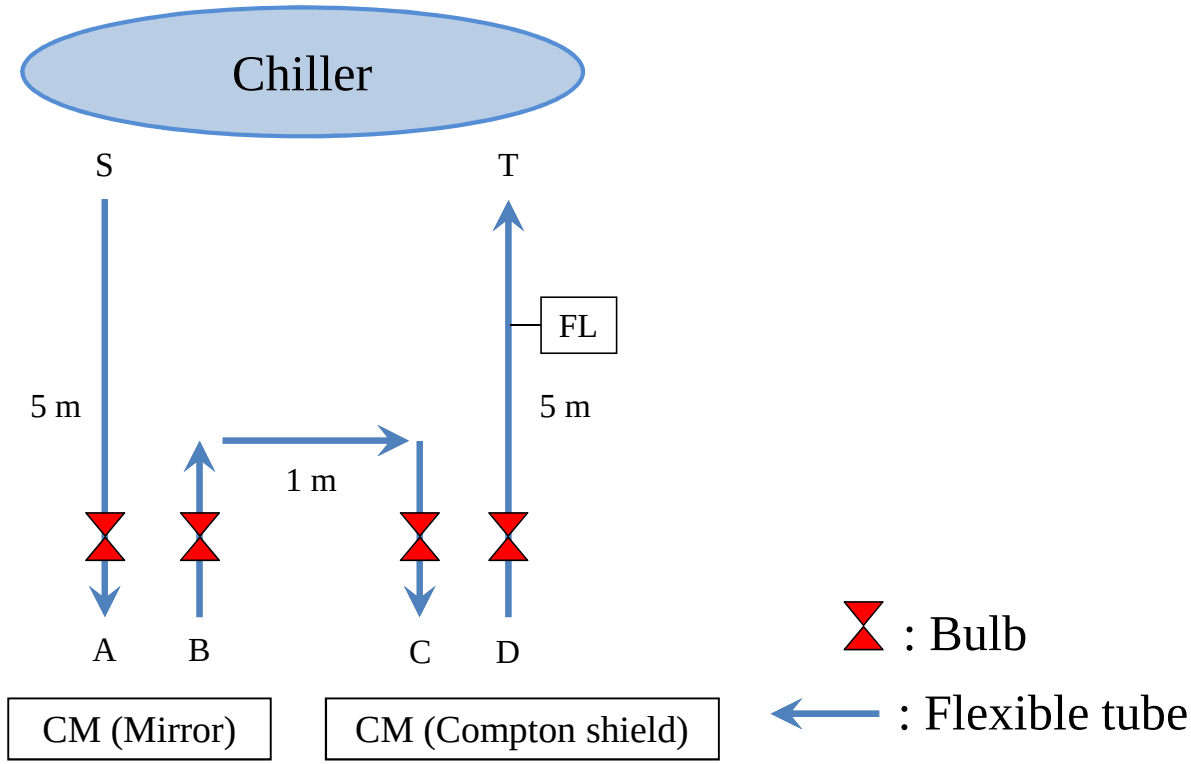

Fig. 2 Reference Data (Cited from technical data of Osaka Rasenkan Kogyo co., LTD.)

Water (20 ℃)

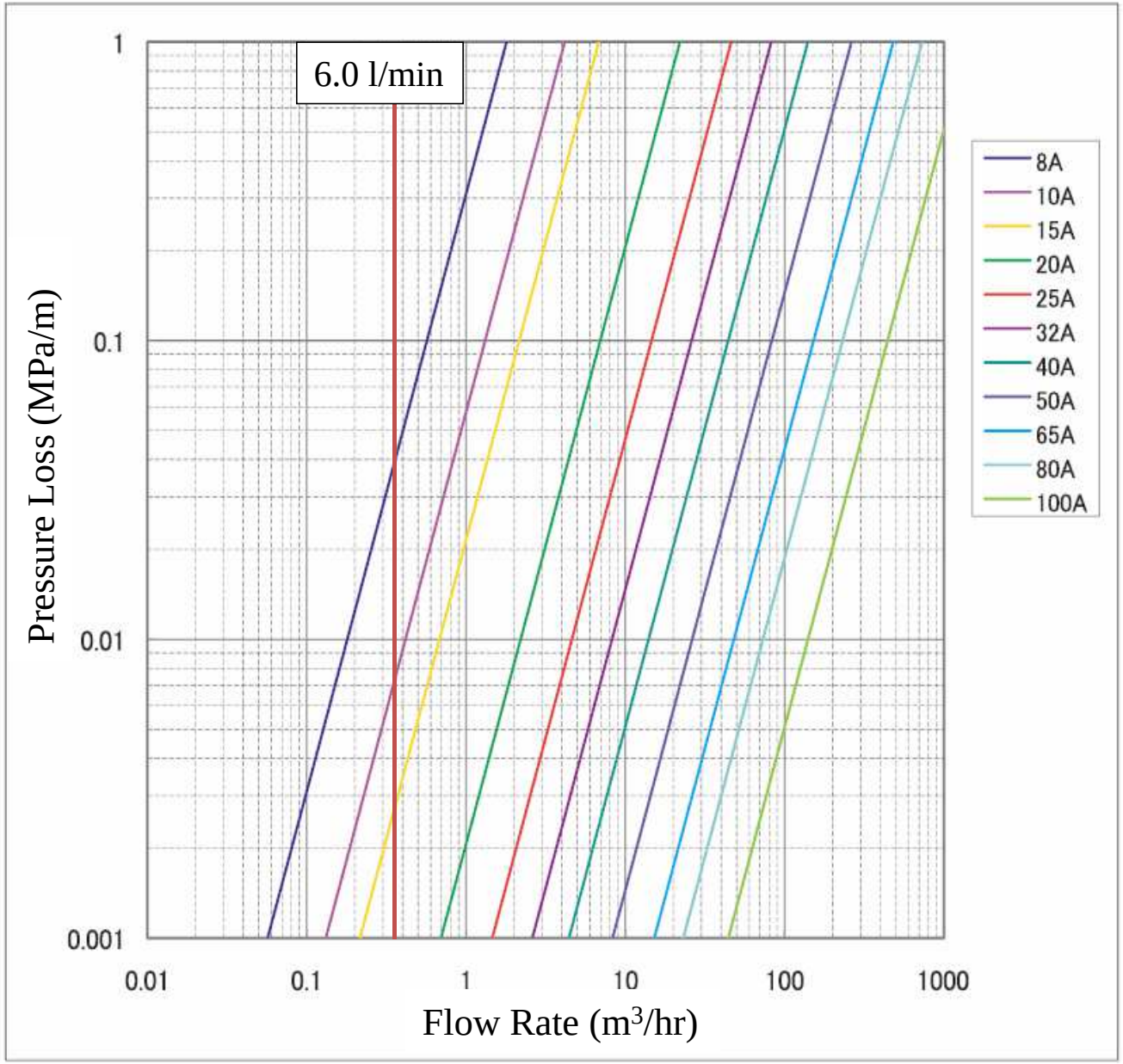

*Since this is a calculated value, actual products may deviate from these value.

Fig. 3 Over View of the each components

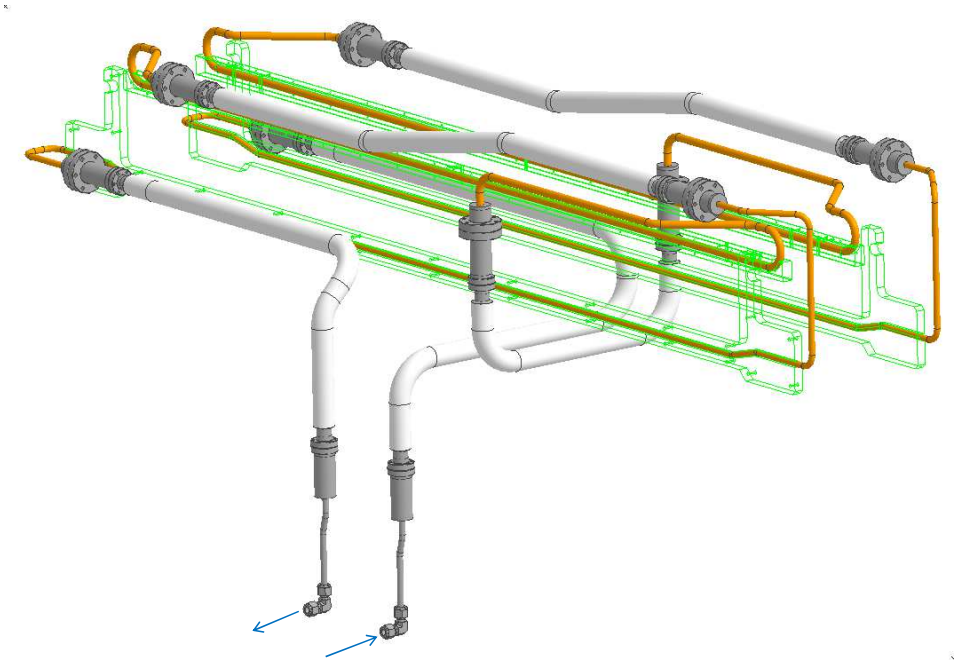

CM (mirror)

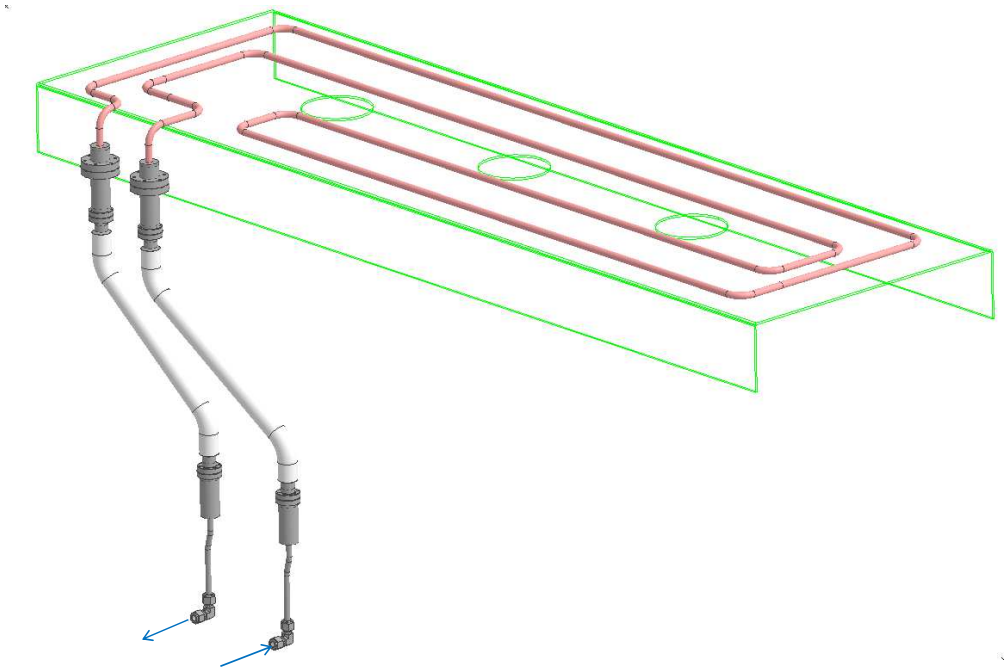

CM (Compton shield)

NSLS 2 FXI

Ray tracing analysis

➢CM, DCM, and TM are only considered.

TOYAMA Co., Ltd

Dec. 4, 2015

Junki Sonoyama

1. Scope

We have performed ray tracing analysis for NSLS 2 FXI beamline with Shadow VUI 1.12. We evaluated the beam size, divergence and flux when Bragg's angle of the double crystal monochromator (DCM) is set to 14.3 °, which correspond to energy of 8 keV. In this calculation, we considered only the fixed mask, the collimating mirror (CM), the double crystal monochromator (DCM) and the toroidal mirror (TM), so that we ignored absorption of the beam fluorescent screens. Moreover, note that only photon energy of 8 keV is watched from source to focal point in this analysis.

Table 1.1.1 shows the beam size, divergence and flux at representative five points, which are source point, just before CM, DCM, TM and the focal point. This results don't necessarily have appropriateness from a perspective of the demagnification. The demagnification of horizontal and vertical is 1.35 (=0.27/0.20) and 0.71 (=0.071/0.10), respectively, which don't correspond to the focal length ratio completely. We think one of this inconsistency cause is optical aberration.

Furthermore, we summarize the results when photon energy is 4 keV and 12 keV in appendix.

	Source point	Just before CM	Just before DCM	Just before TM	Focal point
Flux @ 8 keV [ph/s/0.1%bw]		2.5×10^{14}	2.1×10^{14}	1.7×10^{14}	1.6×10^{14}
Horizontal size [mm]	0.27	5.7	6.7	7.2	0.20
Vertical size [mm]	0.071	5.7	5.7	5.7	0.10
Horizontal divergence [mrad]	5.1	0.19	0.19	0.19	0.29
Vertical divergence [mrad]	0.36	0.19	0.0029	0.0027	0.24

Table 1.1.1. Partial Flux and FWHM of beam size and divergence

2. Optical conditions

We conduct ray tracing analysis for like the following diagram with Shadow, considering reflectivity to estimate flux. In this calculation, we assume that optical components size are infinity, and ignored fluorescent screens.

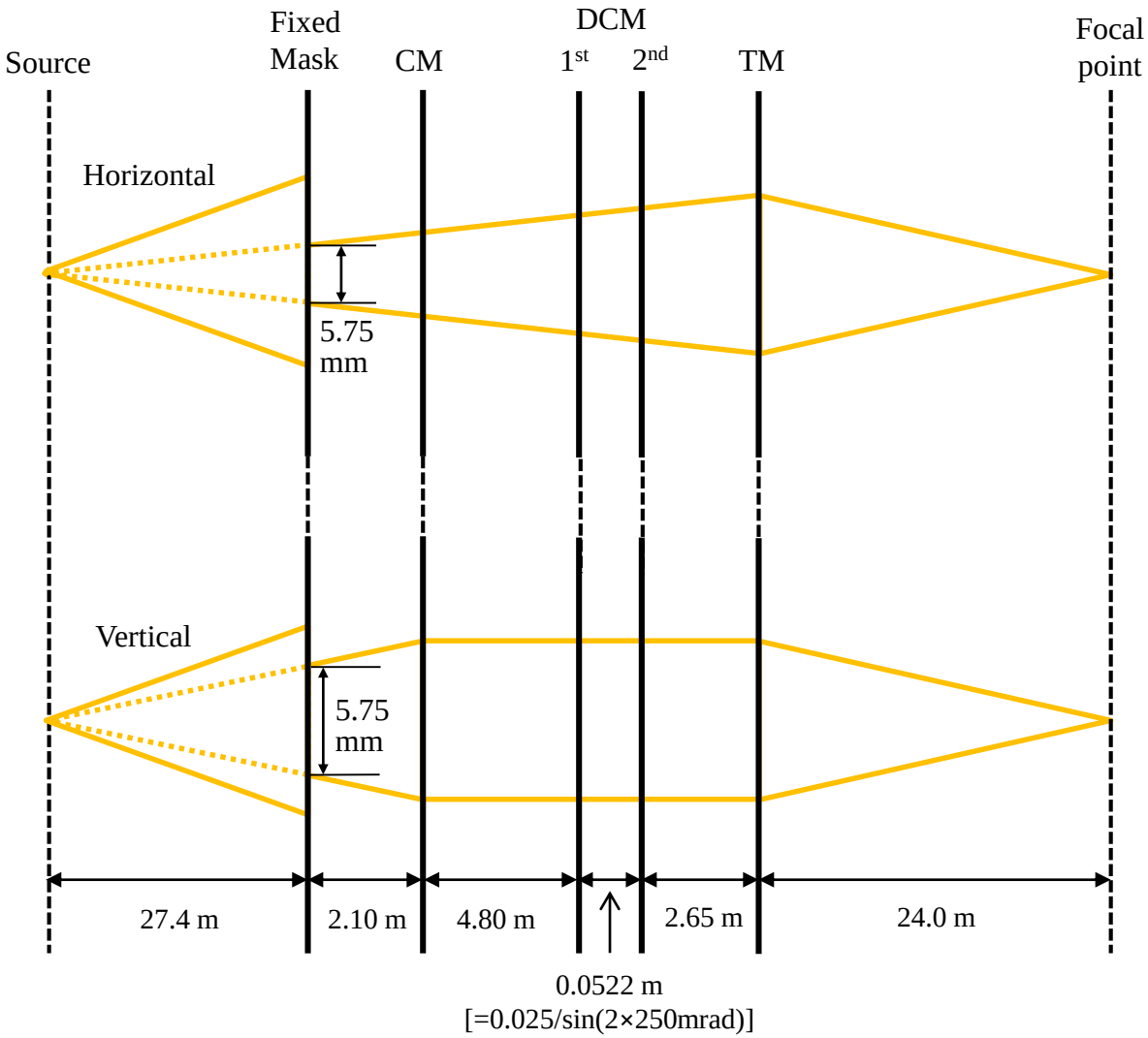

Fig. 2.1.1 Schematic diagram

	CM	DCM	TM
Figure	Cylinder	Planar	Toroidal
Tangential radius R_m [km]	13.4	∞	10.8
Sagittal radius R_s [mm]	∞	∞	128
Incidence angle [mrad]	4.4	250 [14.3°]	4.4
Surface	Chromium	Silicon (111)	Rhodium

Table. 2.1.1 Optical components information

3. Reflectivity of optical components

Fig 3.1 and Fig 3.2 show the mirrors and crystals reflectivity, respectively. We calculated these with XOP, and inserted in Shadow to estimate attenuation of flux.

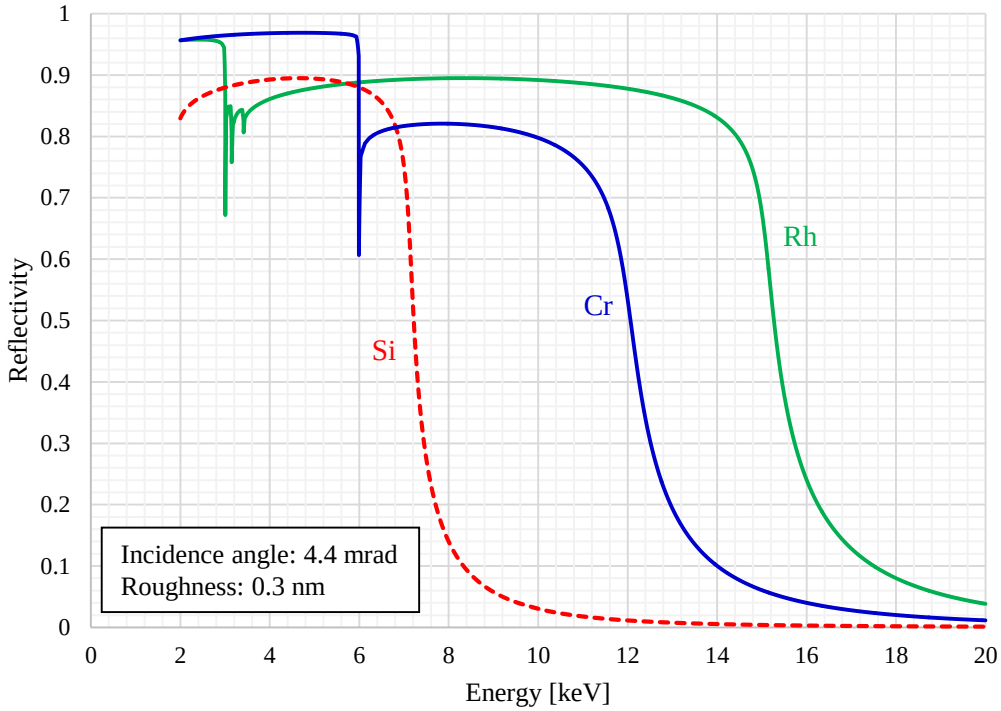

Fig 3.1 Reflectivity of mirrors

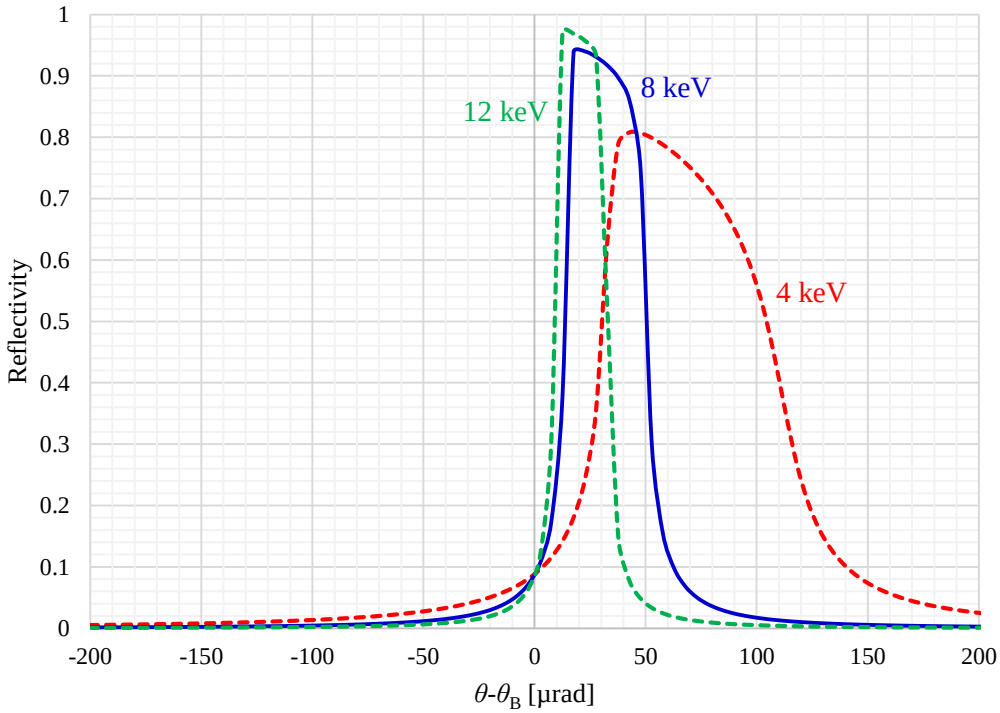

Fig 3.2 Reflectivity of crystals

4. Source conditions

4.1 Parameters

Table. 4.1.1 shows source parameters for SHADOW and SPECTRA, which we adopted from “NSLS-II Source Properties and Floor Layout: April 12, 200”.

	Analysis Conditions	
Horizontal size (σ)	**107**	μm
Vertical size (σ)	**5.2**	μm
Horizontal emittance (σ)	**0.008**	nm-rad
Vertical emittance (σ)	**0.55**	nm-rad
Number of rays	**900000**	
Photon energy	**8000 ± 0.1**	eV
Electron energy	**3**	GeV
Average current	**500**	mA
Circumference	**792**	
Bunches	**1056**	
Natural Emittance	**0.554**	nm. rad
Coupling constant	**0.01409**	
β_x	**20.85**	
β_y	**3.4**	
Gap value	**15**	mm
B	**1.77**	T
Periodic length	**100**	mm
Total length	**3.4**	m
Number of periods	**34**	
K value	**16.5**	

Table. 4.1.1 Source parameters

4.2 Form and divergence at source calculated by SHADOW

Fig. 4.2.1, Fig. 4.2.2 and Fig. 4.2.3 show the beam form and divergence at source.

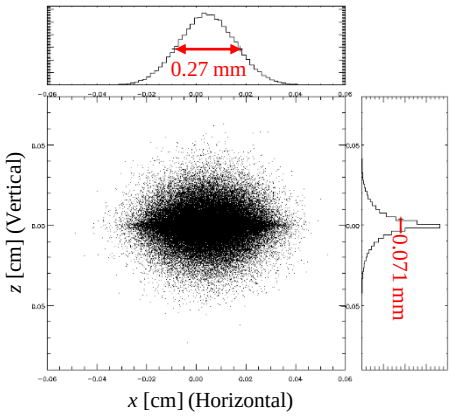

Fig. 4.2.1 *x* vs. *z*

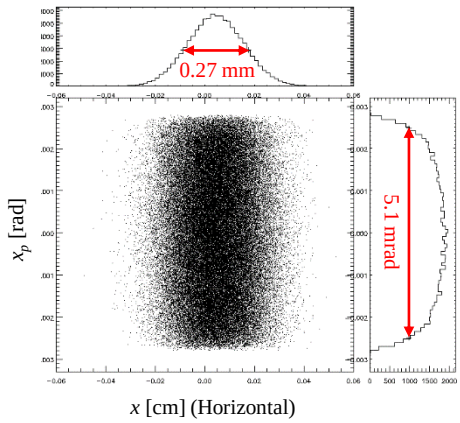

Fig. 4.2.2 *x* vs. x_p

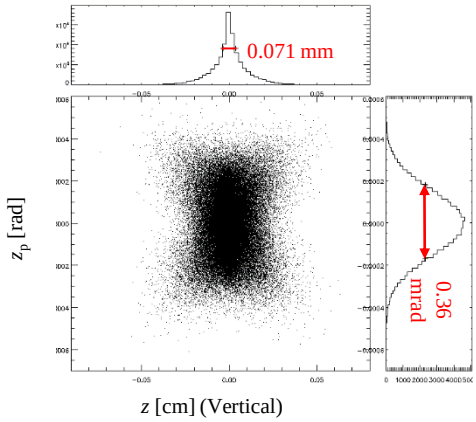

Fig. 4.2.3 *z* vs. z_p

4.3 Energy dependence of partial flux at source calculated by SPECTRA

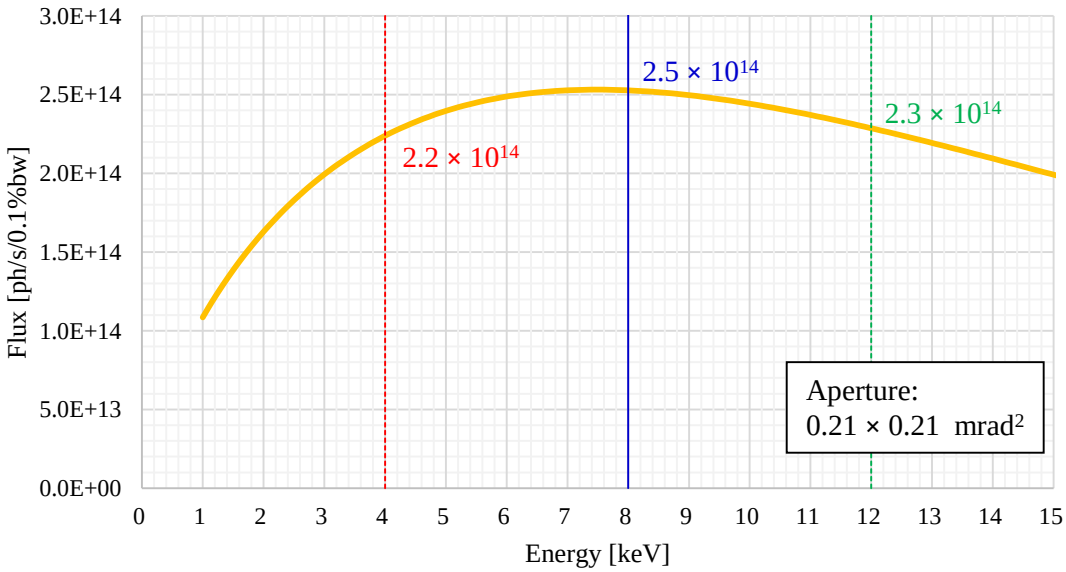

Fig. 4.3.1 Partial flux

5. Calculation results

5.1 Just before collimating mirror

Fig. 5.1.1, Fig. 5.1.2 and Fig. 5.1.3 show the beam form and divergence at 50 mm upper stream side of the collimation mirror.

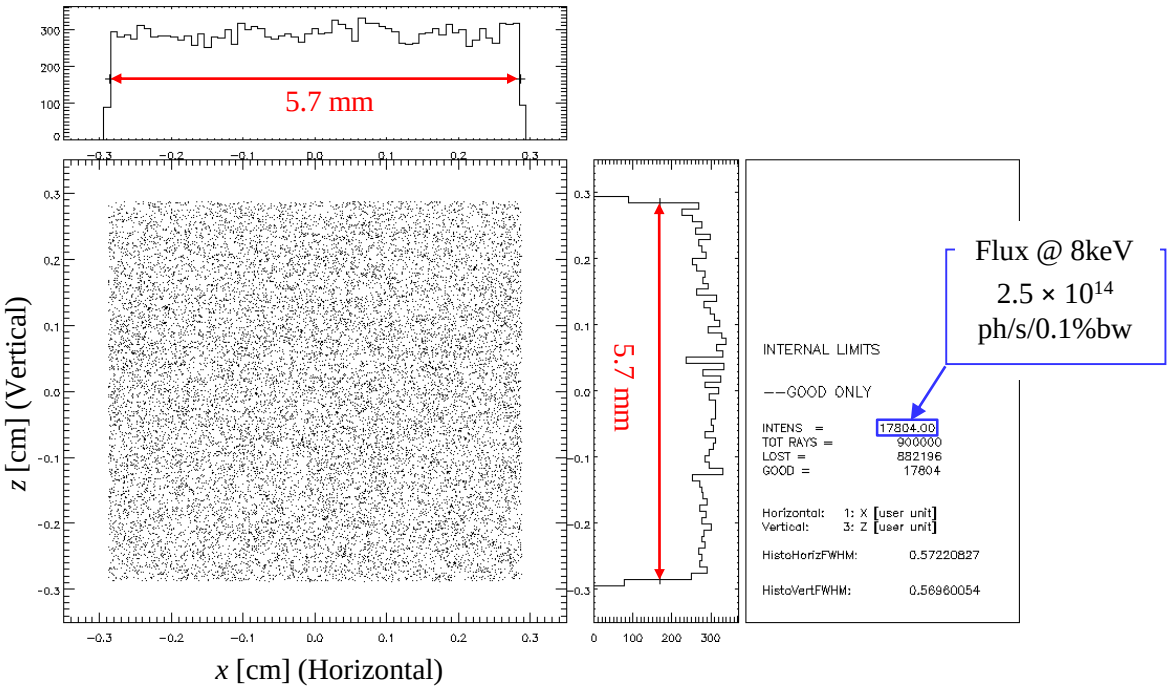

Fig. 5.1.1 *x* vs. *z*

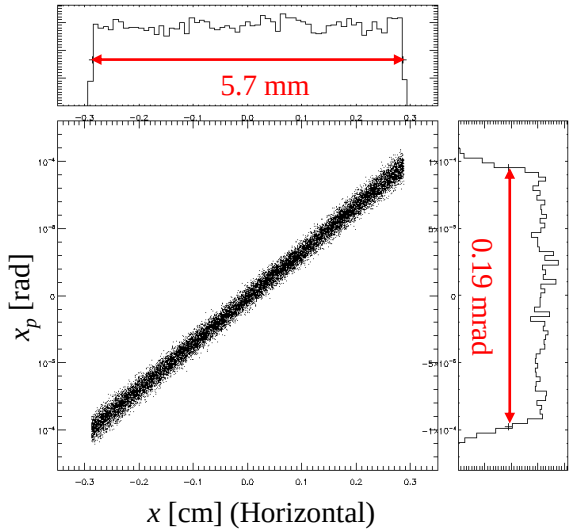

Fig. 5.1.2 *x* vs. x_p

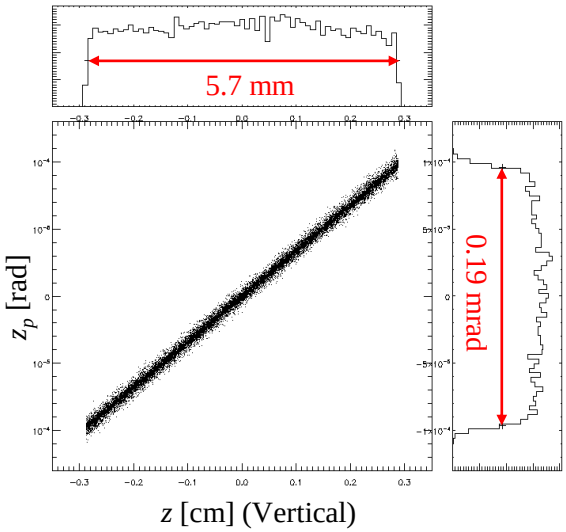

Fig. 5.1.3 *z* vs. z_p

5.2 Just before double crystal monochromator

Fig. 5.2.1, Fig. 5.2.2 and Fig. 5.2.3 show the beam form and divergence at 50 mm upper stream side of the first crystal.

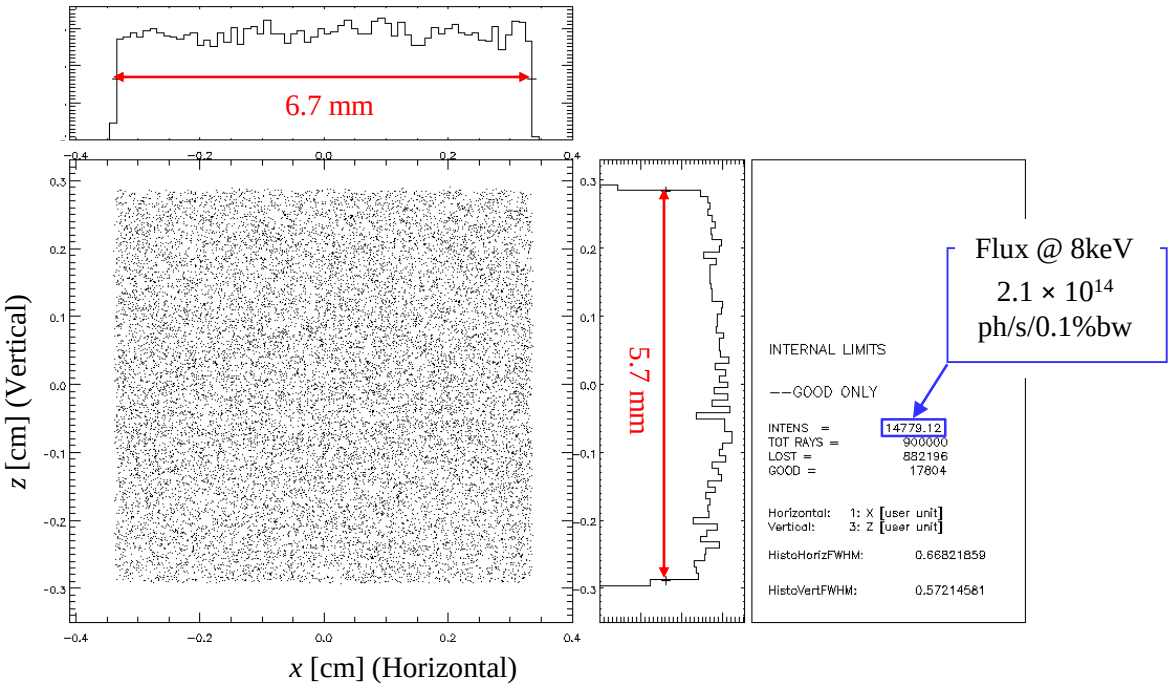

Fig. 5.2.1 *x* vs. *z*

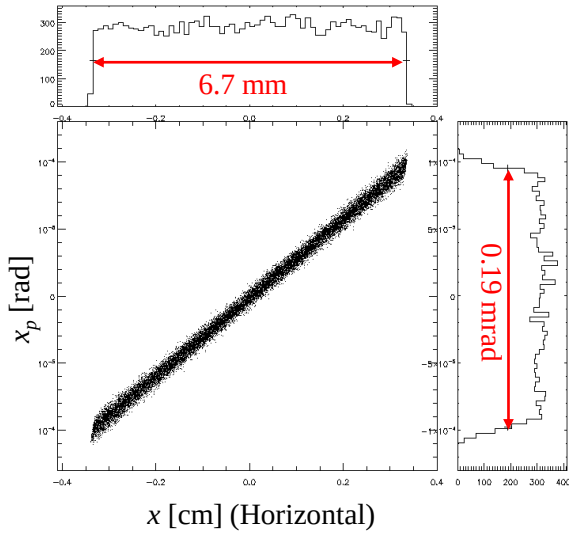

Fig. 5.2.2 *x* vs. x_p

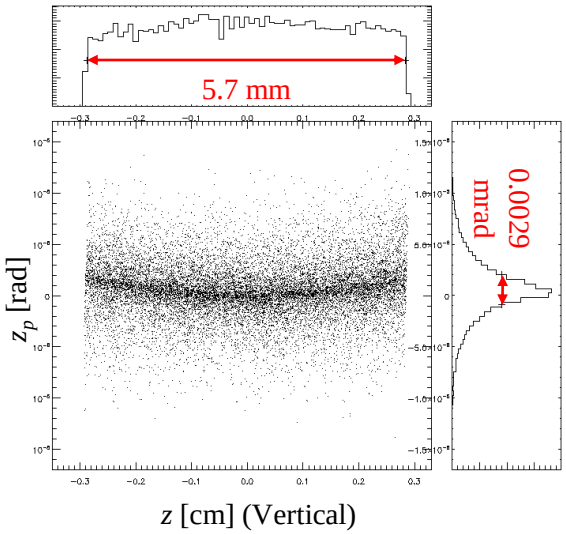

Fig. 5.2.3 *z* vs. z_p

5.3 Just before toroidal mirror

Fig. 5.3.1, Fig. 5.3.2 and Fig. 5.3.3 show the beam form and divergence at 50 mm upper stream side of the toroidal mirror.

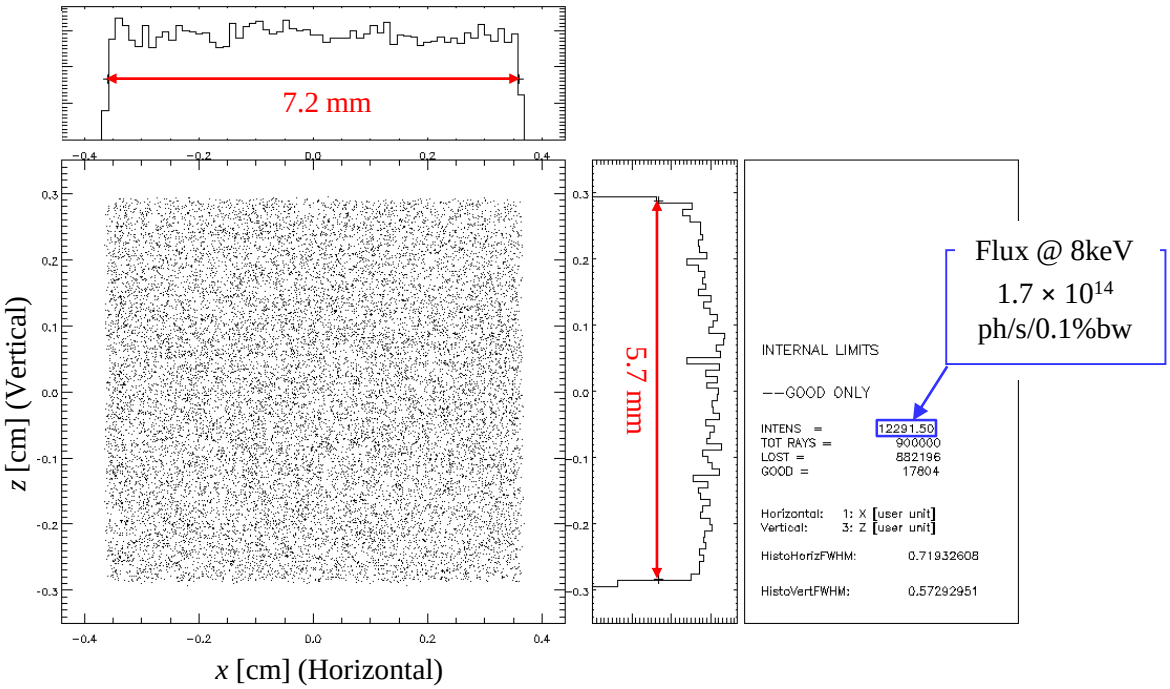

Fig. 5.3.1 *x* vs. *z*

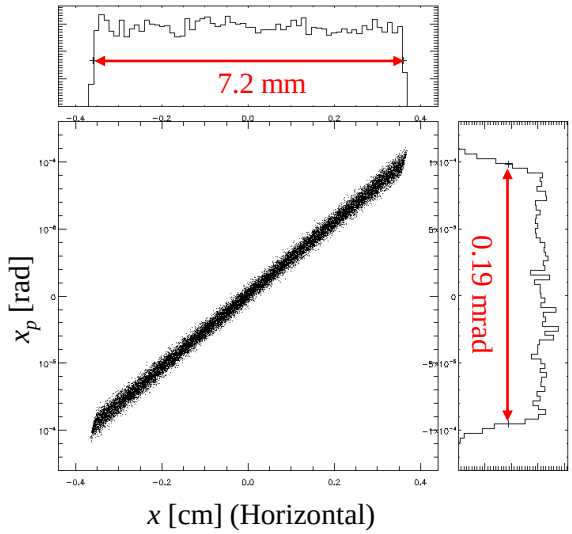

Fig. 5.3.2 *x* vs. x_p

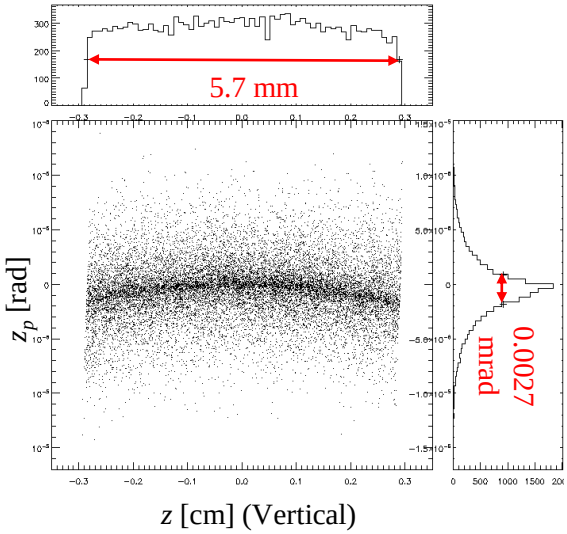

Fig. 5.3.3 *z* vs. z_p

5.4 Focal point

Fig. 5.3.1, Fig. 5.3.2 and Fig. 5.3.3 show the beam form and divergence the focal point.

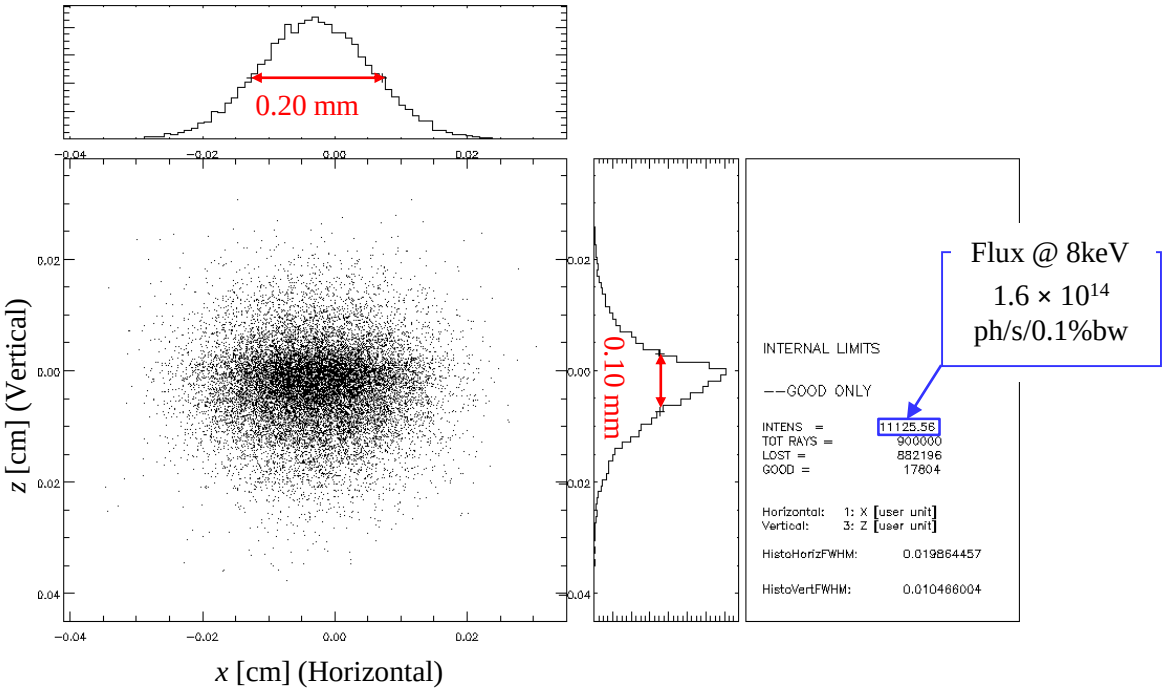

Fig. 5.4.1 x vs. z

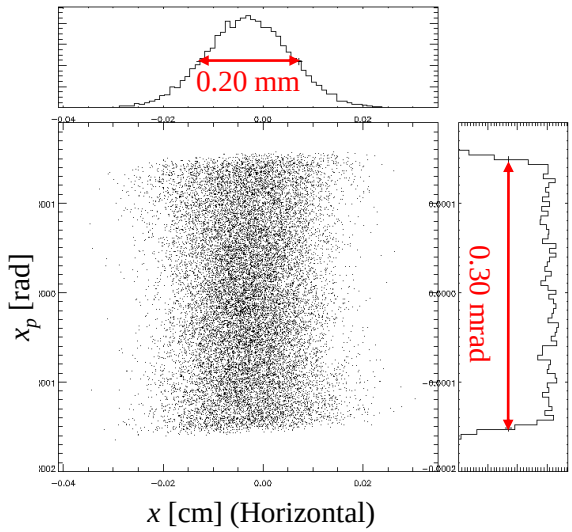

Fig. 5.4.2 x vs. x_p

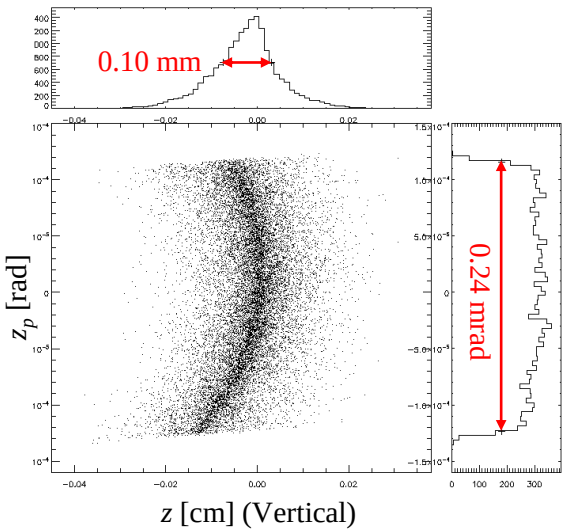

Fig. 5.4.3 z vs. z_p

Appendix

I. Photon energy of 4 keV

I.I Condition

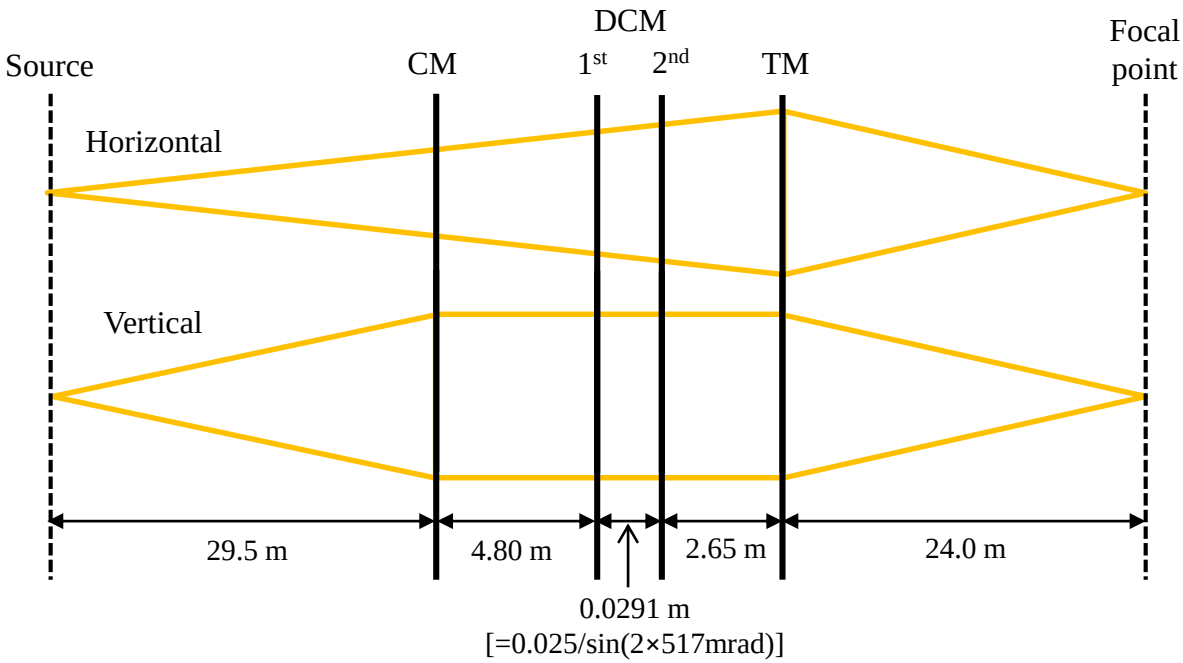

Fig. I.I.(a). Schematic diagram when photon energy is 4 keV

	CM	DCM	TM
Figure	Cylinder	Planar	Toroidal
Tangential radius R_m [km]	13.4	∞	10.8
Sagittal radius R_s [mm]	∞	∞	128
Incidence angle [mrad]	4.4	**517 [29.6°]**	4.4
Surface	**Silicon**	Silicon (111)	Rhodium

Table. I.I.(a) Optical components information when photon energy is 4 keV

I.II Results

	Source point	Just before CM	Just before DCM	Just before TM	Focal point
Flux @ 4 keV [ph/s/0.1%bw]		2.2×10^{14}	2.0×10^{14}	7.9×10^{13}	6.8×10^{13}
Horizontal size [μm]	0.27	5.7	6.7	7.2	0.20
Vertical size [μm]	0.071	5.7	5.8	5.7	0.11
Horizontal divergence [μrad]	5.1	0.19	0.19	0.19	0.30
Vertical divergence [μrad]	0.36	0.19	0.0032	0.0030	0.24

Table I.II.(a) Flux and FWHM of beam size and divergence when photon energy is 4 keV

II. Photon energy of 12 keV

I.I Condition

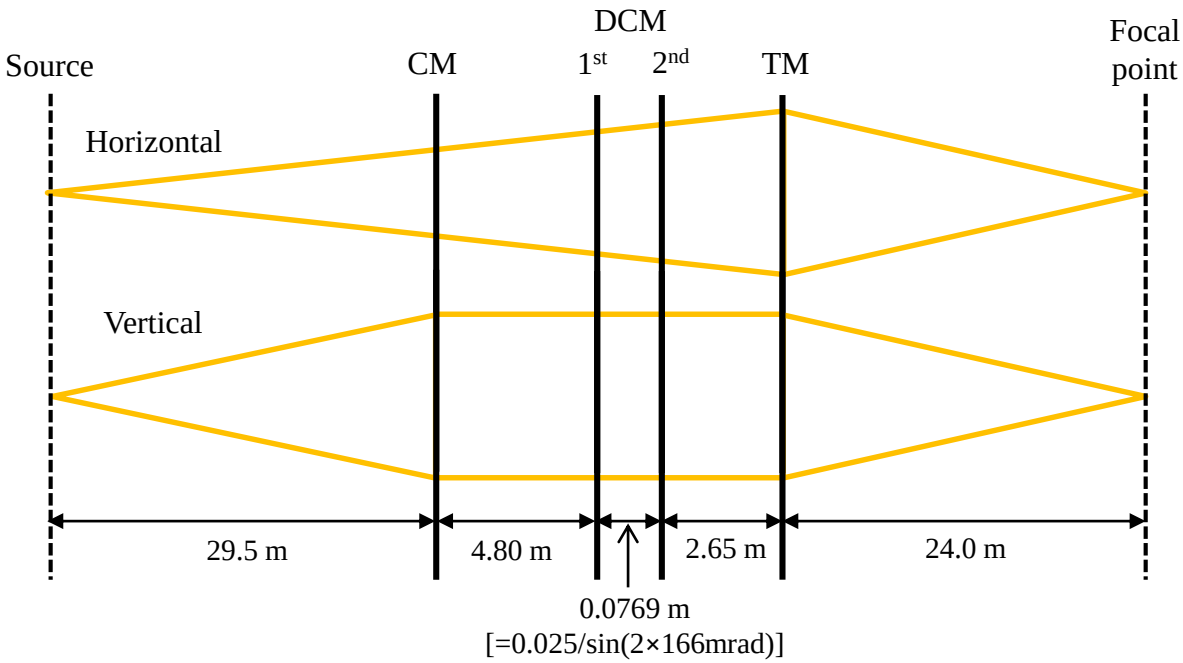

Fig. I.I.(a). Schematic diagram when photon energy is 12 keV

	CM	DCM	TM
Figure	Cylinder	Planar	Toroidal
Tangential radius R_m [km]	13.4	∞	10.8
Sagittal radius R_s [mm]	∞	∞	128
Incidence angle [mrad]	4.4	**166 (9.48°)**	4.4
Surface	**Rhodium**	Silicon (111)	Rhodium

Table. I.I.(a) Optical components information when photon energy is 12 keV

I.II Results

	Source point	Just before CM	Just before DCM	Just before TM	Focal point
Flux @ 12 keV [ph/s/0.1%bw]		2.3×10^{14}	2.1×10^{14}	1.9×10^{14}	1.7×10^{14}
Horizontal size [μm]	0.27	5.7	6.7	7.2	0.20
Vertical size [μm]	0.071	5.7	5.7	5.7	0.11
Horizontal divergence [μrad]	5.1	0.19	0.19	0.19	0.30
Vertical divergence [μrad]	0.36	0.19	0.0027	0.0027	0.24

Table I.II.(a) Flux and FWHM of beam size and divergence when photon energy is 12 keV