SSWP 1557 REWORK TRAVELLER

NSLS-II

NATIONAL SYNCHROTRON LIGHT SOURCE II

FXI PHOTON DELIVERY SYS. ACCEPTANCE TESTING

Rev Date: 09/22/2017
Author: Wah-Keat Lee
Approved: 09/25/2017

Title	Name	Approval Date
FXI Beamline Lead Scientist	Wah-Keat Lee	09/25/2017
ES&H Operations Manager	Lori Stiegler	09/22/2017
Quality Assurance Engineer	Joseph Zipper	09/22/2017

Serial No	Part No	Part Rev	ECN	Rev	ECN	Rev
	PD-FXI-LAY-002					

Deviation & Waiver: _____

OP	Description	Name/Life #	Date	DR
10	TRAVELER INFORMATION - This step is informational and does not require sign off. This traveler covers the installation and site acceptance testing of the Photon Delivery System delivered by Toyama Inc. These components include Fixed Mask/Differential Pumping Assembly, Bremsstrahlung Collimator, Collimating Mirror, White/Pink Beam Screen, White Beam Stop/Pink Beam Mask, Pink Beam Slits, Double Crystal Monochromator, Pink/Mono Beam Screen, Pink Beam Stop, Secondary Bremstahhlung Shielding, Toroidal Mirror, Mono Beam Screen, Secondary Bremstahhlung Shielding, and Beryllium window. Reference Tech Spec: NX-C-SPC-FXI-PDS-001	W. Lee 24945	1/29/18	

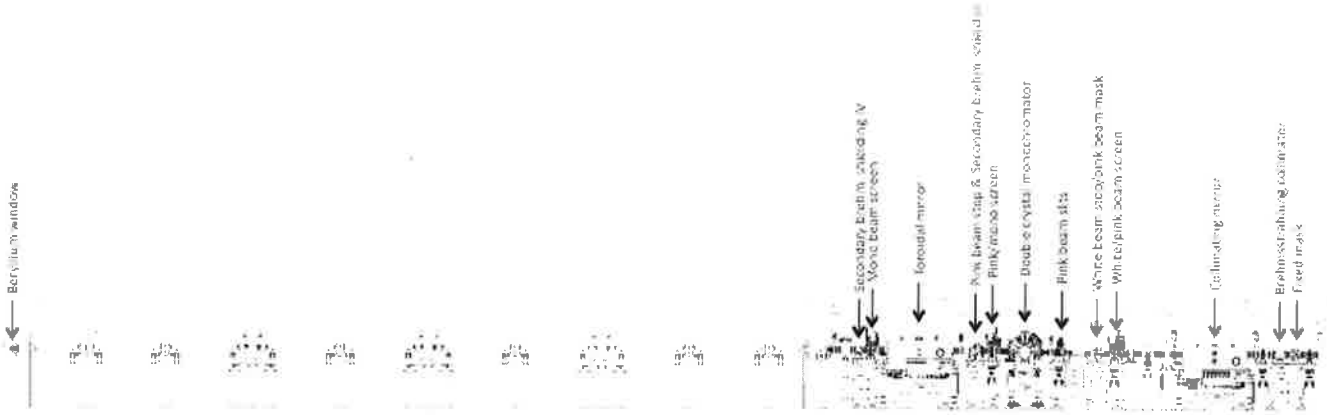

20	Follow the ESH and PPE requirements for the area. Wear safety glasses, safety shoes and gloves for physical installation as applicable	W. Lee 24945	1/29/18	

OP	Description	Name/Life #	Date	DR
30	Verify measuring and test equipment used for this procedure contains a valid calibration label in accordance with NSLS-II Calibration Procedure PS-QAP-0901, where applicable. The technician is responsible for notifying the technical supervisor and/or the cognizant engineer of any discrepancies occurring during the performance of this procedure. All discrepancies shall be identified and reported in accordance with NSLS-II Discrepancy Reporting Procedure PS-QAP-0002.	W. Lee 24945	1/29/18	
40	Verify the installation of the Fixed Mask/Differential Pumping Assembly according to the vendor's installation documentation.	NA		
50	SURVEY GROUP - Verify aperture size and alignment of the Fixed Mask/Differential Pumping Assembly per traveler BL-SRVY-001 - Attach completed traveler to this traveler.	NA		
60	Verify the installation of the Bremsstrahlung Collimator according to the vendor's installation documentation.	NA		
70	SURVEY GROUP - Verify aperture size and alignment of the Bremsstrahlung Collimator per traveler BL-SRVY-001 - Attach completed traveler to this traveler.	NA		
80	Verify the installation of the Collimating Mirror according to the vendor's Installation documentation.	NA		
90	SURVEY GROUP A. Verify alignment of the Collimating Mirror B. Verify Collimating Mirror Y stage hard-stops are set correctly per PD-FXI-BL-1020 and TN 265. C. Attach Survey Report to this traveler	24945 W. Lee	1/29/18	
100	Verify the installation of the White/Pink Beam Screen according to the vendor's Installation documentation.	NA		

OP	Description	Name/Life #	Date	DR
110	SURVEY GROUP - Verify alignment of the Whith/Pink Beam Screen - Attach Survey Report to this traveler	NA		
120	Verify the installation of the White Beam Stop/Pink Beam Mask according to the vendor's Installation documenation.	NA		
130	SURVEY GROUP - Verify alignment of the White Beam Stop/Pink Beam Mask per traveler BL-SRVY-001 - Attach completed traveler to this traveler.	NA		
140	Verify the installation of the Pink Beam Slits according to the vendor's Installation Documentation.	NA		
150	SURVEY GROUP - Verify alignment of the Pink Beam Slits - Attach Survey Report to this traveler	NA		
160	METROLOGY: A. Review the vendor(s) supplied metrology report(s) for DCM crystals and verify compliance with relevant specifications. B. Attach metrology report(s) to this traveler.	NA		
170	Verify the installation of the Double Crystal Monochromator according to the vendor's Installation documenation.	NA		
180	SURVEY GROUP - Verify alignment of the Double Crystal Monochromator - Attach Survey Report to this traveler	NA		
190	Verify the installation of the Pink/Mono Beam Screen according to the vendor's installation documentation.	NA		
200	SURVEY GROUP - Verify alignment of the Pink/Mono Beam Screen - Attach Survey Report to this traveler	NA		

OP	Description	Name/Life #	Date	DR
210	Verify the installation of the Pink Beam Stop according to the vendor's Installation documenation.	NA		
220	SURVEY GROUP - Verify aperture size and alignment of the Pink Beam Stop per traveler BL-SRVY-001 - Attach completed traveler to this traveler.	NA		
230	Verify the installation of the Secondary Bremstahhlung Shielding according to the vendor's Installation documenation.	NA		
240	SURVEY GROUP - Verify aperture size and alignment of the Secondary Bremstahhlung Shielding per traveler BL-SRVY-001 - Attach completed traveler to this traveler.	NA		
250	Verify the installation of the Toroidal Mirror according to the vendor's installation documentation.	NA		
260	SURVEY GROUP - Verify alignment of the Toroidal Mirror - Attach Survey Report to this traveler	NA		
270	Verify the installation of the Mono Beam Screeen according to the vendor's installation documentation.	NA		
280	SURVEY GROUP - Verify alignment of the Mono Beam Screen - Attach Survey Report to this traveler	NA		
290	Verify the installation of the Secondary Bremstahhlung Shielding according to the vendor's Installation documenation.	NA		
300	SURVEY GROUP - Verify aperture size and alignment of the Secondary Bremstahhlung Shielding per traveler BL-SRVY-001 - Attach completed traveler to this traveler.	NA		

OP	Description	Name/Life #	Date	DR
310	Verify the installation of the Beryllium Window according to the vendor's installation documentation.	NA		
320	SURVEY GROUP - Verify alignment of the Beryllium Window - Attach Survey Report to this traveler	NA		
330	Vacuum Testing: - Perform vaccum testing as per traveler BL-VA-001. - Attached completed BL-VA-001 traveler to this traveler.	NA		
340	Motion Testing with NSLS-II Motion Control System: Verify the motion of all motorized axes of the beamline components listed above. Also verify the function of travel limits, over-travel limits, encoders, and home switches where applicable. Document results and attach test report.	NA		
350	Verify All Traveler Operations Complete	W. Lee 24945	1/29/18	
360	QUALITY ASSURANCE Verify all end item documentation per SOW has been received.	NA		
370	REVISION HISTORY (This step is informational and does not require signoff) Rev - Description - Date B First Release	NA		

The Collimating Mirror Survey Result At 18-ID FXI

Measurement Date: 01/11/2018
Measured By : D. Davis
Reported By: M. Ke

The reference control is updated in May 2017.

Leica AT960 was used to measure the control and the components.

PRACTICAL FRAME is created in the following manner:
Origin is the center of the cell 18 straight;
+Z is from Origin to the actual downstream aperture center of the front end fixed mask with -2.032 mm offset along X direction ;
+Y is up;
+X is outboard.

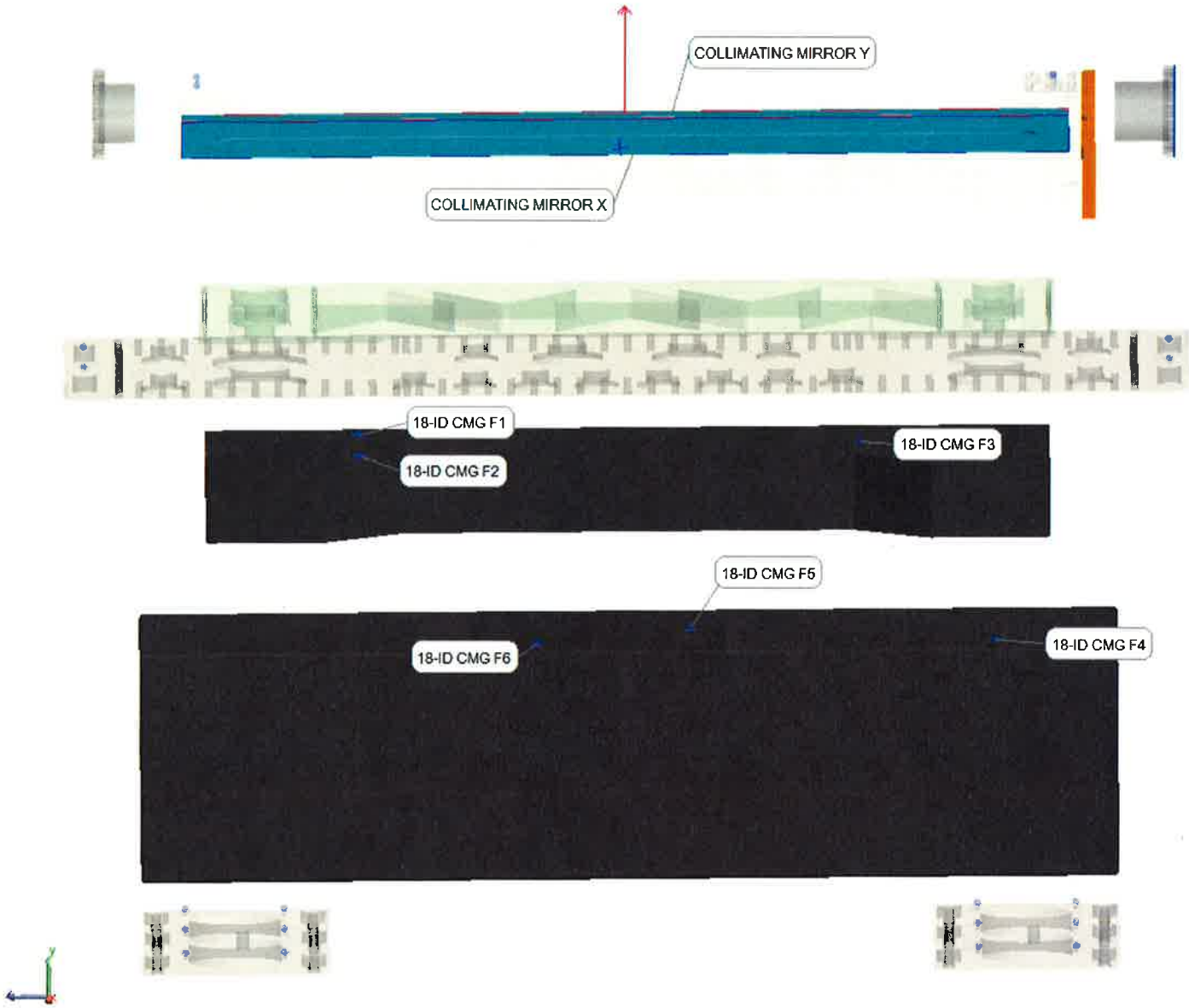

Plane M1 UPDATE 1_11_2018::COLLIMATING MIRROR Y				
	A	B	C	D
(mm)	0.000103	1.000000	0.000017	-0.515799
Proj. Ang. (deg)	Rx from Y 0.001	Ry from Z 80.557	Rz from X 89.994	

CM top surface

Y = 0.012 mm

Plane M1 UPDATE 1_11_2018::COLLIMATING MIRROR X				
	A	B	C	D
(mm)	0.999997	-0.002265	0.000017	-50.727654
Proj. Ang. (deg)	Rx from Y 179.574	Ry from Z 89.999	Rz from X -0.130	

CM outboard face

X = 50.111 mm

Point Group M1 UPDATE 1_11_2018::FIDS			
Point Name	X (mm)	Y (mm)	Z (mm)
18-ID CMG F1	-149.100	-543.698	29939.691
18-ID CMG F2	150.846	-543.860	29939.759
18-ID CMG F3	0.773	-543.634	29119.822
18-ID CMG F4	210.654	-848.965	28899.771
18-ID CMG F5	0.723	-848.972	29399.879
18-ID CMG F6	210.957	-848.975	29650.080

CM fiducials

REVISION HISTORY					
REV	DESCRIPTION	DATE	DESIGNER	CHECKED BY	ENGINEER
A	RELEASE PER ECO-004688	1/2017	C. LONGO	C.A./M.L.	S. COBURN
B	REVISED PER ECO-005267	1/2018	M. JOHANSON	M. LOFTUS	B. KOSCIUK

NOTES: B

1. SHEET 2 SHOWS OBSOLETE HARD STOP DESIGN. SEE SHEET 5 FOR BNL DESIGNED HARD STOPS.
2. "DOWN" STOP PARTS TO BE INSTALLED ON OUTSIDE OF UPSTREAM WEDGE JACK (1 PLACE). TORQUE M8 SCREWS TO 29 FT-LBS.
3. "UP" STOP PARTS TO BE INSTALLED ON OUTSIDE OF DOWNSTREAM WEDGE JACKS (2 PLACES).

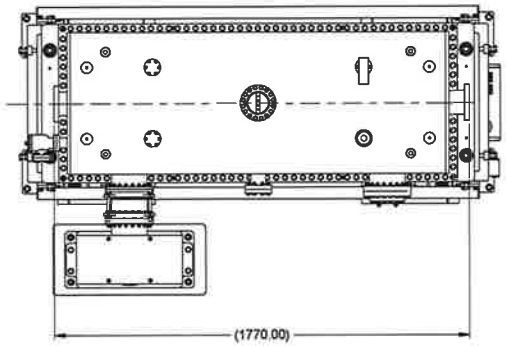

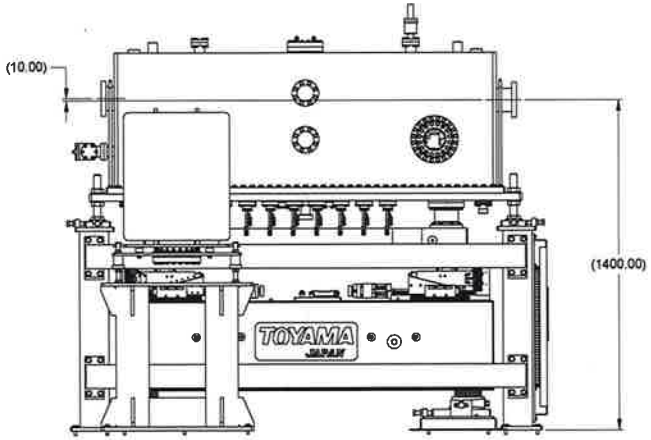

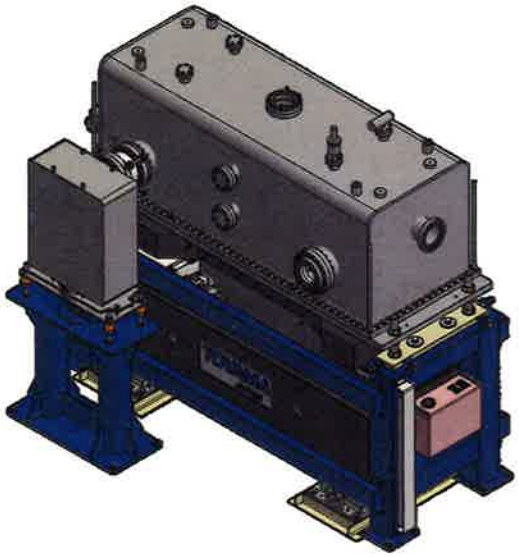

SCALE 1 : 10

VENDOR ITEM CONTROL DRAWING

SUGGESTED SOURCE OF SUPPLY		
BNL PART NO.	VENDOR PART NO.	NAME & ADDRESS
PD-FXI-BL-1020	0AB01047	TOYAMA CO, LTD KANAGAWA, 258-0112, JAPAN TEL: +81-46-579-1411 EMAIL: carl@toyama-jp.com sales@toyama-jp.com

IDENTIFICATION OF THE SUGGESTED SOURCE(S) OF SUPPLY HEREON IS NOT TO BE CONSTRUED AS A GUARANTEE OF PRESENT OR CONTINUED AVAILABILITY AS A SOURCE OF SUPPLY FOR THE ITEMS.

VENDOR SUPPLIED DESIGN

UNLESS OTHERWISE SPECIFIED

DRAWN BY	C. LONGO	3/13/2018
CHECKED BY	C.A./M.L.	1/2017
DESIGNED BY	S. COBURN	1/2017
	W. LEE	1/2017
	L. STEGLER	1/2017
APPROVAL	J. ZIPPER	1/2017

X. ± 1.500 ± .5°
.X ± 0.750
.XX ± 0.400
.XXX ± 0.120
32

NSLS II

PHOTON DIVISION
FXI BEAMLINE
COLLIMATING MIRROR

D | PD-FXI-BL-1020 | B

NEXT ASSY. PD-FXI-BL-1000
PROJECT:
THIRD ANGLE PROJECTION
SCALE: SEE DWG VIEW
WBS# 6.13.02
ES+HO RISK LEVEL A1
SHEET 1 OF 5

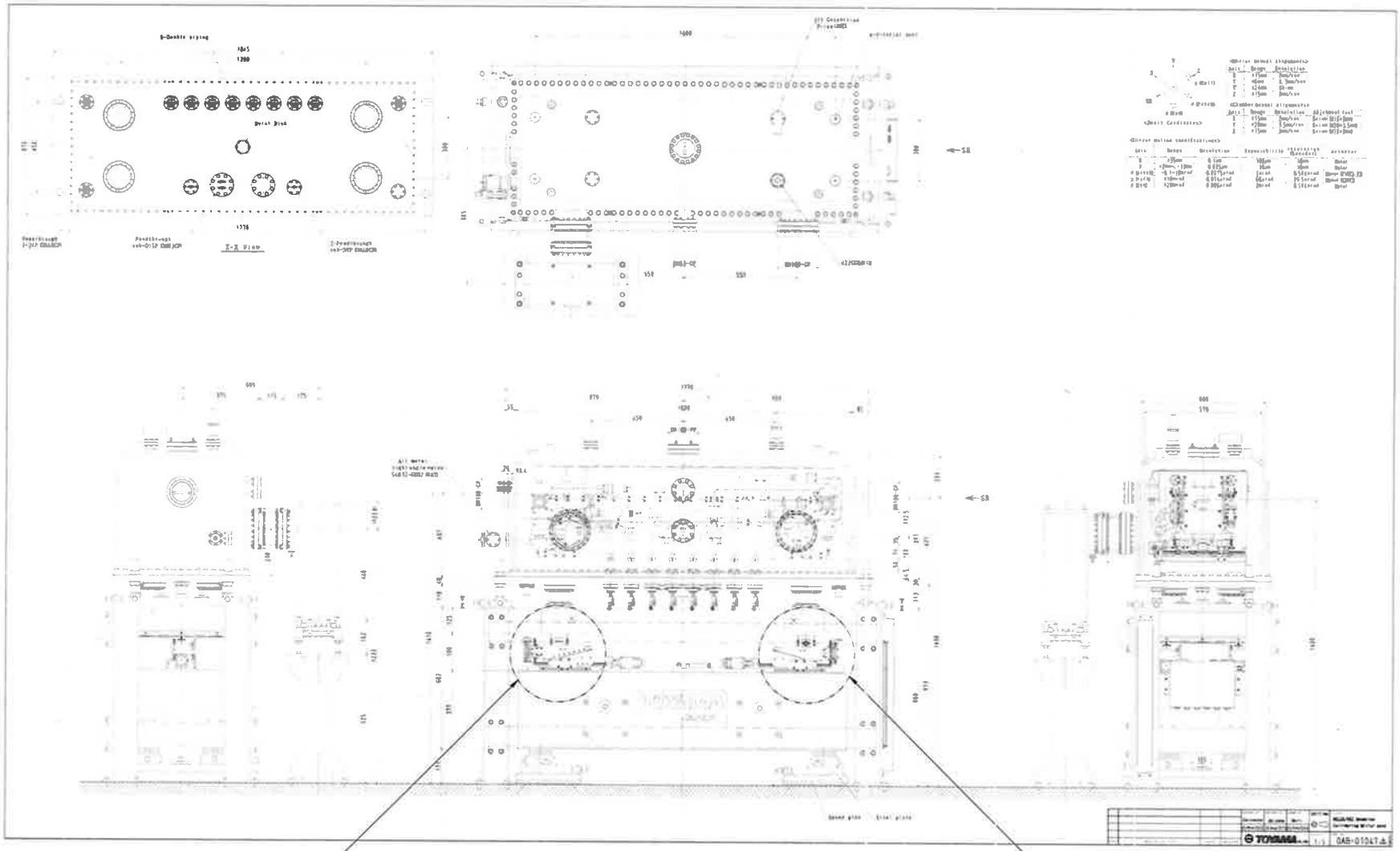

DOWNSTREAM WEDGE JACKS, SEE NOTE 3

UPSTREAM WEDGE JACK, SEE NOTE 2

VENDOR SUPPLIED DESIGN

D	PD-FXI-BL-1020	B
ESHSO RISK LEVEL A1		SHEET 2 OF 5

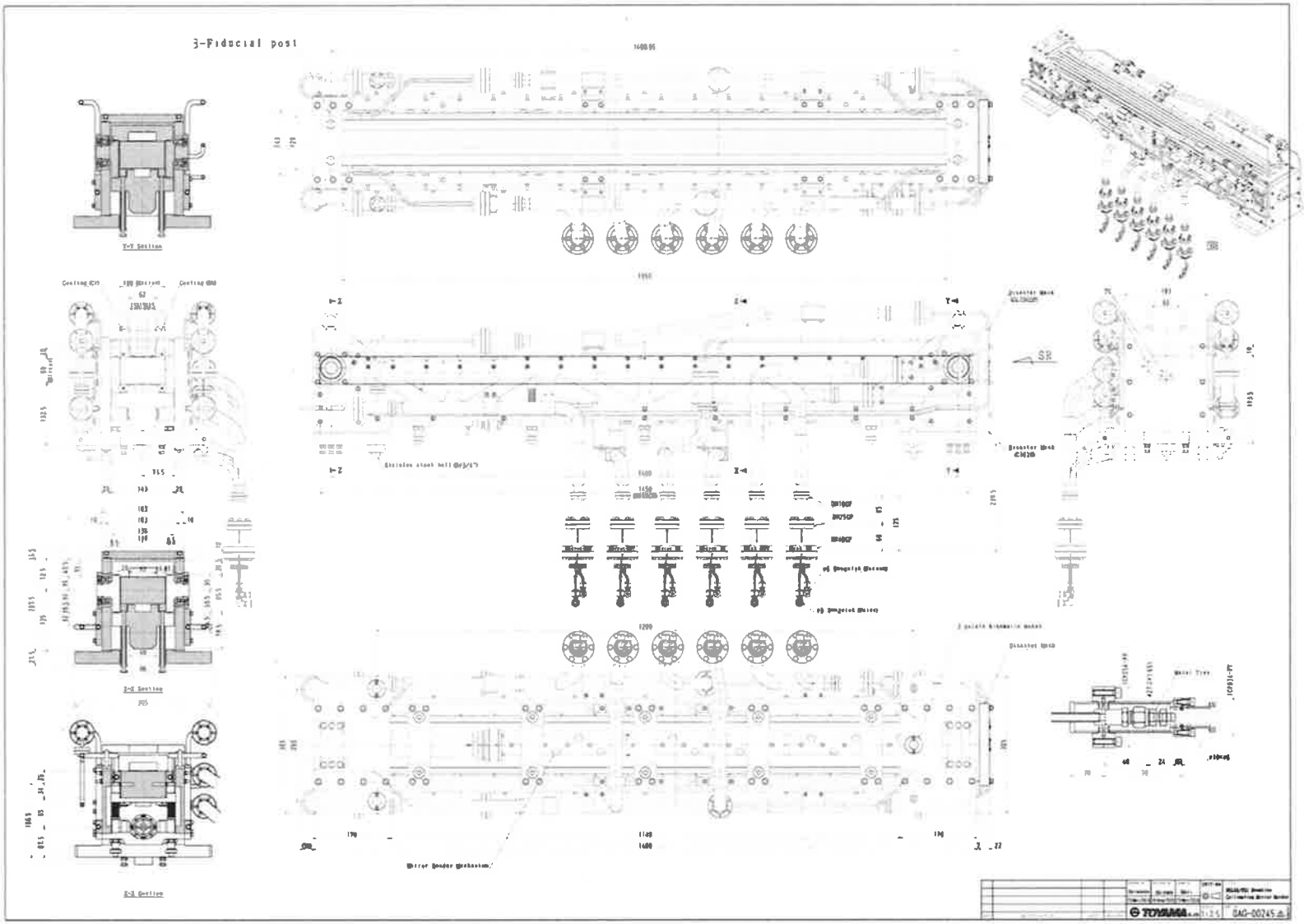

VENDOR SUPPLIED DESIGN

D	PD-FXI-BL-1020	B
ESHG RISK LEVEL A1	SHEET 3 OF 5	

C:\Mech Eng\LTHPD\FXI\BL\PD-FXI-BL-1020.dwg

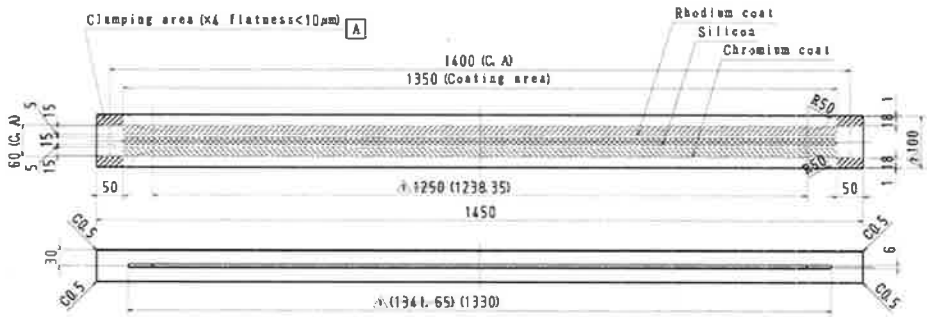

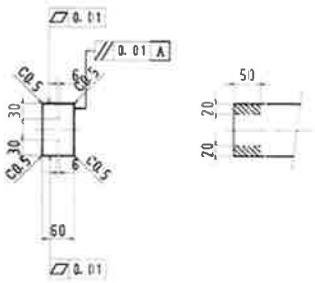

Collimating mirror optical specifications

Mirror material	Single crystal silicon
Material resistivity	≤10 ohm-cm
Reflecting surfaces	Chromium, silicon, rhodium. The rhodium part of the mirror shall be coated with a 60nm ±10nm thick rhodium layer. A 12.5nm ±2.5nm thick chromium binder layer shall be used between the silicon and the rhodium coating. The chromium part of the mirror shall be coated with 60nm ±10nm thick chromium layer.
Minimum active area for each stripe (Si, Cr or Rh)	1350mm×15mm; there shall be a minimum of 2mm and a maximum of 5mm separation between the active areas.
Mirror dimensions	1450 (L) ×100mm (W) ×60mm (T)
Figure (unbent, reflecting surface)	Planar. Tangential radius> 30Km; Sagital radius 3Km
Surface roughness (reflecting surface)	≤0.3nm rms
Tangential slope error (unbent, reflecting surface, no beam)	≤1μrad rms (freq range L^{-1} to $0.5mm^{-1}$)
Sagital figure error (unbent, reflecting surface, no beam)	≤20μrad rms (freq range W^{-1} to $0.5mm^{-1}$)
Surface finish (reflecting surface)	No visible defects or scratches. strain free chemical-mechnical polish.
General finish	All mirror edges shall be chamfered or rounded.
Reference	The mirror will be bent in the tangential direction from flat to 5Km radius.

				DRAWN BY Hatanaka 06/Jan/2016	DESIGNED BY Akiyama 06/Oct/2015	CHECK BY Akiyama 06/Jan/2016	UNIT: mm	TITLE NSLS-II FXI Photon Delivery System Collimating mirror
A	Change groove length	15/Dec/2015	K. A	TOYAMA co.,ltd			SCALE 1:5	DWG. No. 2JG-00848 A
REV	MODIFICATION	DATE	MODIFIER					

VENDOR SUPPLIED DESIGN

D	PD-FXI-BL-1020	B
ESHAQ RISK LEVEL A1		SHEET 4 OF 5

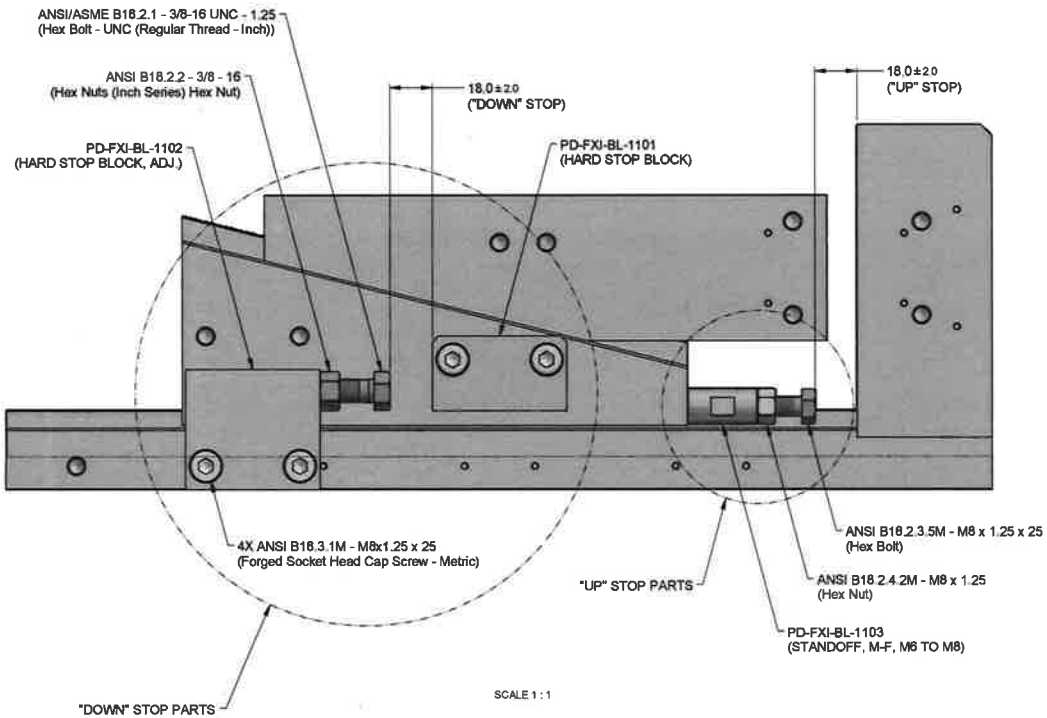

SCALE 1 : 1

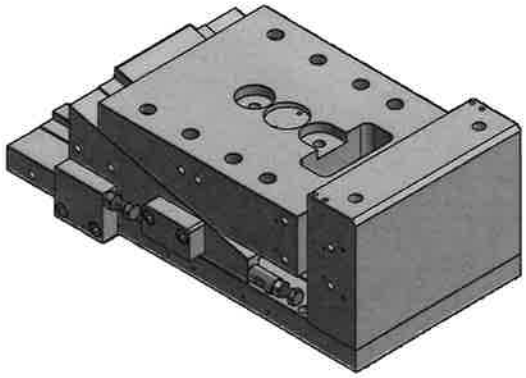

ISO VIEW
SCALE 1 : 2

B

BNL HARD STOP DESIGN

D	PD-FXI-BL-1020	B
ESHAQ RISK LEVEL A1		SHEET 5 OF 5

NOTES:

1. ITEM IDENTIFICATION: BAG OR TAG WITH PART NUMBER AND APPLICABLE REVISION LETTER.

REVISION HISTORY					
REV	DESCRIPTION	DATE	DESIGNER	CHECKED BY	ENGINEER
A	RELEASE PER ECO-005267	1/2018	M. JOHANSON	M. LOFTUS	B. KOSCIUK

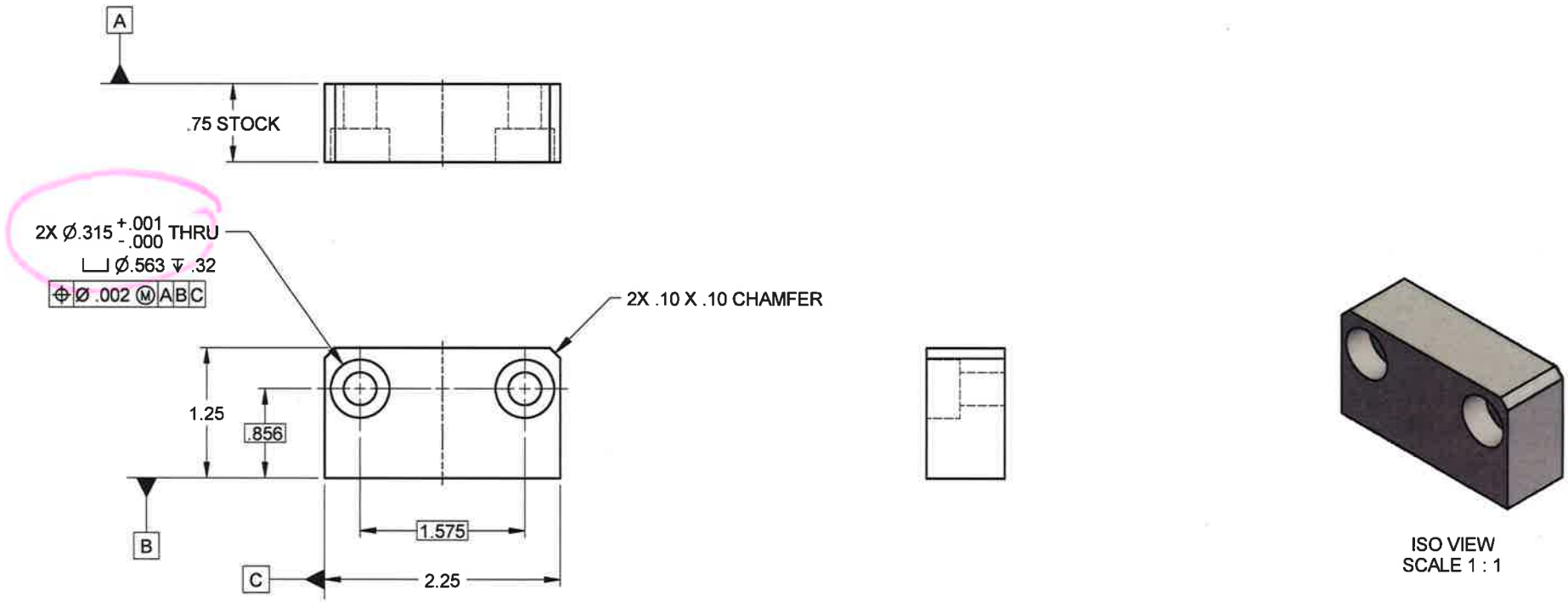

MATERIAL: STAINLESS STEEL TYPE 304 PER ASTM A240

MASS: 0.5 lbmass

UNLESS OTHERWISE SPECIFIED
ALL DIMENSIONS ARE IN INCHES

DIMENSIONS IN BRACKETS [xx.xx] (WHERE PRESENT) ARE MILLIMETERS AND ARE FOR REFERENCE ONLY

INTERPRET DRAWING AS PER ASME Y14.5-1994 OR Y32.2-1975

DIMENSIONAL TOLERANCES
X. ± 0.060
.X ± 0.030
.XX ± 0.015
.XXX ± 0.005

ANGULAR TOLERANCE ± .5°

FINISH 125

BREAK EDGES & SHARP CORNERS 0.005 MIN. TO 0.030 MAX

BROOKHAVEN NATIONAL LABORATORY
BROOKHAVEN NATIONAL LABORATORY
BROOKHAVEN SCIENCE ASSOCIATES
UPTON, NEW YORK 11973
Exploring Life's Mysteries, Protecting its Future

NSLSII NATIONAL SYNCHROTRON LIGHT SOURCE II

DRAWN BY	M. JOHANSON	1/3/2018
CHECKED BY	M. LOFTUS	1/2018
VACUUM APPROVAL	-	-
ENGINEER APPROVAL	B. KOSCIUK	1/2018
SUPERVISOR APPROVAL	W. LEE	1/2018
ES&H APPROVAL	L. STIEGLER	1/2018
Q.A. APPROVAL	J. ZIPPER	1/2018

PHOTON DIVISION
FXI BEAMLINE
HARD STOP BLOCK

SHEET SIZE: B
DRAWING/PART NUMBER: PD-FXI-BL-1101
REVISION: A

NEXT ASSY: PD-FXI-BL-1020

PROJECT: FXI

THIRD ANGLE PROJECTION

SCALE: SEE DWG VIEW

WBS# 6.13.02

ESH&Q RISK LEVEL: A3

SHEET 1 OF 1

C:\Mech Engl TIDNEVIDI\DD EXI BL 1101.idw

NOTES:

1. ITEM IDENTIFICATION: BAG OR TAG WITH PART NUMBER AND APPLICABLE REVISION LETTER.

REVISION HISTORY					
REV	DESCRIPTION	DATE	DESIGNER	CHECKED BY	ENGINEER
A	RELEASE PER ECO-005267	1/2018	M. JOHANSON	M. LOFTUS	B. KOSCIUK

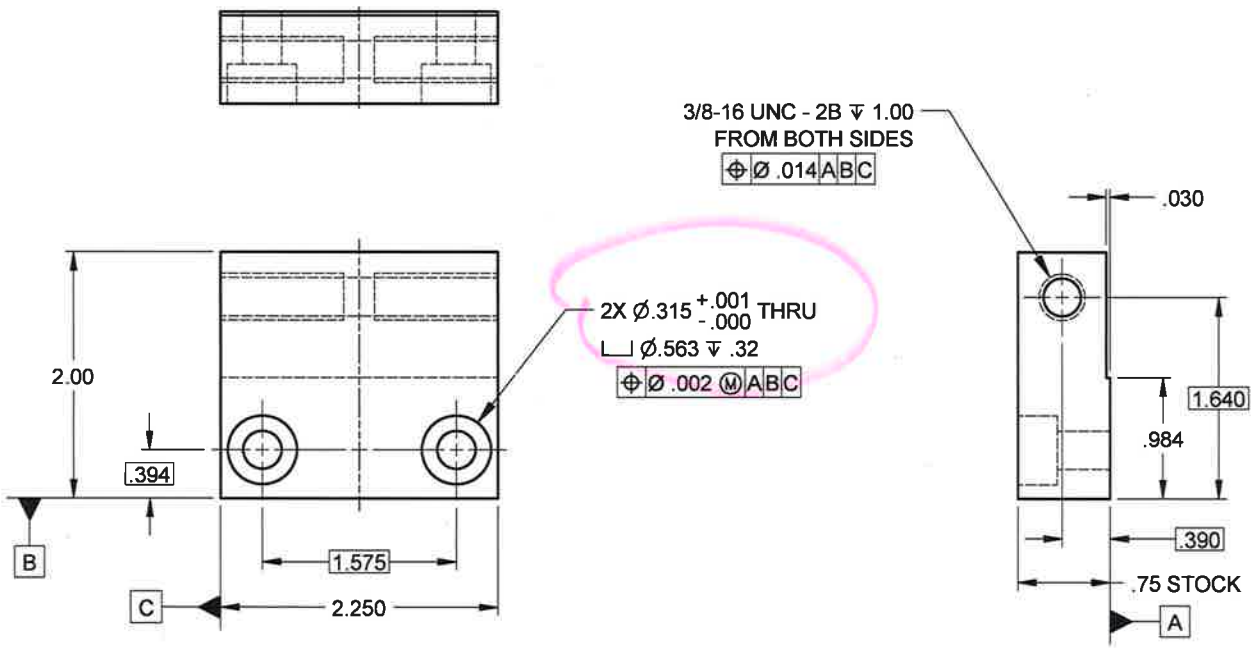

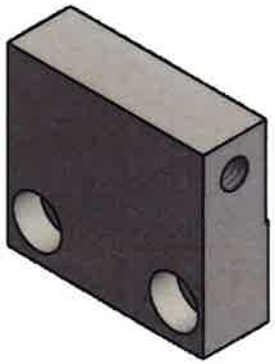

SCALE 1 : 1

MATERIAL: STAINLESS STEEL TYPE 304 PER ASTM A240

MASS: 0.8 lbmass

UNLESS OTHERWISE SPECIFIED
ALL DIMENSIONS ARE IN INCHES

DIMENSIONS IN BRACKETS [xx.xx] (WHERE PRESENT) ARE MILLIMETERS AND ARE FOR REFERENCE ONLY

INTERPRET DRAWING AS PER ASME Y14.5-1994 OR Y32.2-1975

DIMENSIONAL TOLERANCES	ANGULAR TOLERANCE
X. ± 0.060	± .5°
.X ± 0.030	
.XX ± 0.015	FINISH 125
.XXX ± 0.005	

BREAK EDGES & SHARP CORNERS 0.005 MIN. TO 0.030 MAX

BROOKHAVEN NATIONAL LABORATORY
BROOKHAVEN NATIONAL LABORATORY
BROOKHAVEN SCIENCE ASSOCIATES
UPTON, NEW YORK 11973
Exploring Life's Mysteries, Protecting its Future

NSLS II NATIONAL SYNCHROTRON LIGHT SOURCE II

DRAWN BY	M. JOHANSON	1/3/2018
CHECKED BY	M. LOFTUS	1/2018
VACUUM APPROVAL	-	-
ENGINEER APPROVAL	B. KOSCIUK	1/2018
SUPERVISOR APPROVAL	W. LEE	1/2018
ES&H APPROVAL	L. STIEGLER	1/2018
Q.A. APPROVAL	J. ZIPPER	1/2018

PHOTON DIVISION
FXI BEAMLINE
HARD STOP BLOCK, ADJ.

SHEET SIZE: B
DRAWING/PART NUMBER: PD-FXI-BL-1102
REVISION: A

NEXT ASSY: PD-FXI-BL-1020

PROJECT: FXI

THIRD ANGLE PROJECTION

SCALE: SEE DWG VIEW

WBS# 6.13.02

ESH&Q RISK LEVEL: A3

SHEET 1 OF 1

NOTES:

1. ITEM IDENTIFICATION: BAG OR TAG WITH PART NUMBER AND APPLICABLE REVISION LETTER.

REVISION HISTORY					
REV	DESCRIPTION	DATE	DESIGNER	CHECKED BY	ENGINEER
A	RELEASE PER ECO-005267	1/2018	M. JOHANSON	M. LOFTUS	B. KOSCIUK

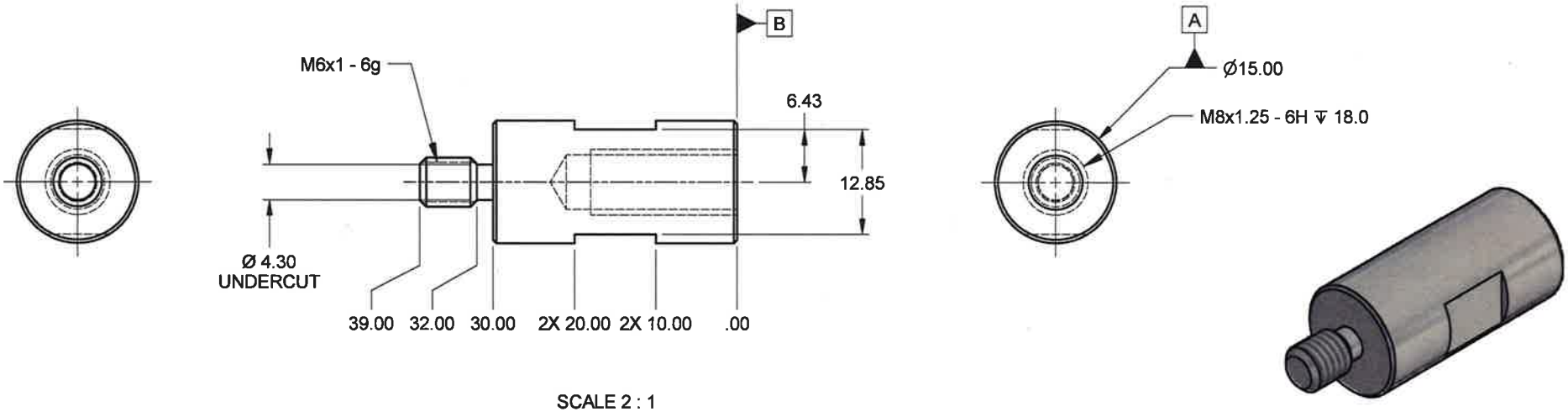

SCALE 2 : 1

ISO VIEW
SCALE 2 : 1

MATERIAL: STAINLESS STEEL TYPE 400 PER ASTM A283 GRADE D

MASS: 0.0 kg

UNLESS OTHERWISE SPECIFIED
ALL DIMENSIONS ARE IN MILLIMETERS

DIMENSIONS IN BRACKETS [xx.xx] (WHERE PRESENT) ARE INCHES AND ARE FOR REFERENCE ONLY

INTERPRET DRAWING AS PER ASME Y14.5-1994 OR Y32.2-1975

DIMENSIONAL TOLERANCES	ANGULAR TOLERANCE
X. ± 1.500	± .5°
.X ± 0.750	
.XX ± 0.400	FINISH 3.2
.XXX ± 0.120	

BREAK EDGES & SHARP CORNERS 0.120 MIN. TO 0.750 MAX

BROOKHAVEN NATIONAL LABORATORY
BROOKHAVEN NATIONAL LABORATORY
BROOKHAVEN SCIENCE ASSOCIATES
UPTON, NEW YORK 11973
Exploring Life's Mysteries, Protecting Its Future

NSLS II NATIONAL SYNCHROTRON LIGHT SOURCE II

DRAWN BY	M. JOHANSON	1/3/2018
CHECKED BY	M. LOFTUS	1/2018
VACUUM APPROVAL	-	-
ENGINEER APPROVAL	B. KOSCIUK	1/2018
SUPERVISOR APPROVAL	W. LEE	1/2018
ES&H APPROVAL	L. STIEGLER	1/2018
Q.A. APPROVAL	J. ZIPPER	1/2018

PHOTON DIVISION
FXI BEAMLINE
STANDOFF, M-F, M6 TO M8

SHEET SIZE: B
DRAWING/PART NUMBER: PD-FXI-BL-1103
REVISION: A

NEXT ASSY: PD-FXI-BL-1020

PROJECT: FXI

THIRD ANGLE PROJECTION

SCALE: SEE DWG VIEW

WBS# 6.13.02

ESH&Q RISK LEVEL: A3

SHEET 1 OF 1

C:\Mech Excel TDDEV\BL\1D FXI BL 1103.iam