REVISION HISTORY					
REV	DESCRIPTION	DATE	DESIGNER	CHECKED BY	ENGINEER
A	RELEASE PER ECO-004688	1/2017	C. LONGO	C.A. / M.L.	S. COBURN
B	REVISED PER ECO-005267	1/2018	M. JOHANSON	M. LOFTUS	B. KOSCIUK

NOTES: B

1. SHEET 2 SHOWS OBSOLETE HARD STOP DESIGN.
   SEE SHEET 5 FOR BNL DESIGNED HARD STOPS.
2. "DOWN" STOP PARTS TO BE INSTALLED ON OUTSIDE OF UPSTREAM WEDGE JACK (1 PLACE).
   TORQUE M8 SCREWS TO 29 FT-LBS.
3. "UP" STOP PARTS TO BE INSTALLED ON OUTSIDE OF DOWNSTREAM WEDGE JACKS (2 PLACES).

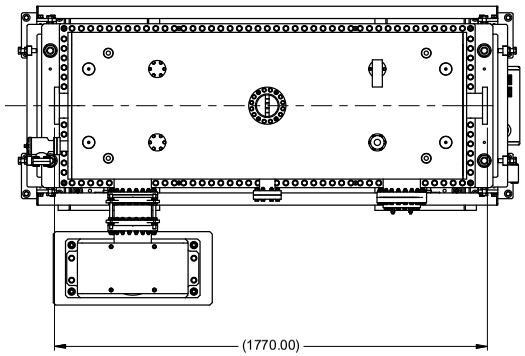

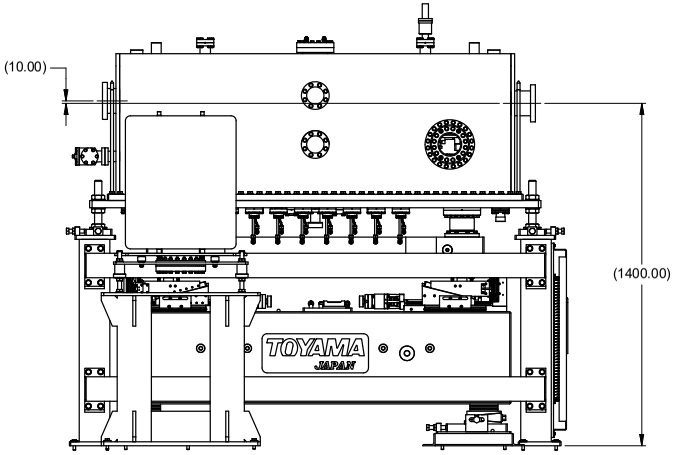

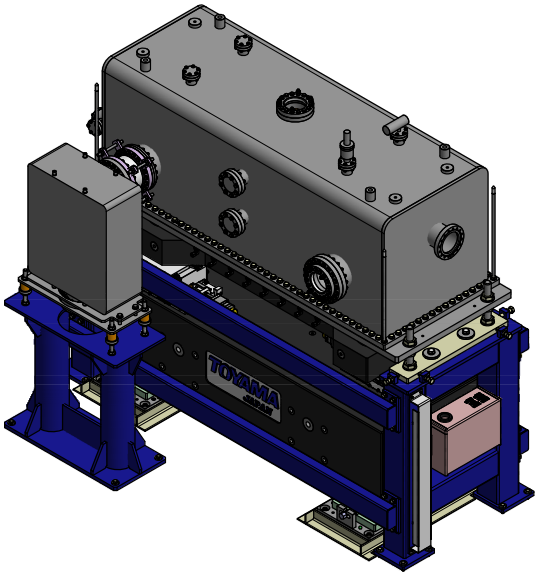

SCALE 1 : 10

VENDOR ITEM CONTROL DRAWING

SUGGESTED SOURCE OF SUPPLY		
BNL PART NO.	VENDOR PART NO.	NAME & ADDRESS
PD-FXI-BL-1020	0AB01047	TOYAMA CO, LTD KANAGAWA, 258-0112, JAPAN TEL: +81-46-579-1411 EMAIL: carl@toyama-jp.com sales@toyama-jp.com

IDENTIFICATION OF THE SUGGESTED SOURCE(S) OF SUPPLY HEREON IS NOT TO BE CONSTRUED AS A GUARANTEE OF PRESENT OR CONTINUED AVAILABILITY AS A SOURCE OF SUPPLY FOR THE ITEMS.

VENDOR SUPPLIED DESIGN

UNLESS OTHERWISE SPECIFIED
ALL DIMENSIONS ARE IN MILLIMETERS
DIMENSIONS IN BRACKETS (ex.mm) (INSERT PRESENT) ARE INCHES AND ARE FOR REFERENCE ONLY
INTERPRET DRAWING AS PER ASME Y14.5-1994 OR Y14.5-1995

DIMENSIONAL TOLERANCES	ANGULAR TOLERANCE
X. ± 1.500 .X ± 0.750 .XX ± 0.400 .XXX ± 0.120	± .5°

FINISH 3.2

BREAK EDGES & SHARP CORNERS 0.125 MIN. TO 0.750 MAX

THIRD ANGLE PROJECTION

SCALE: SEE DWG VIEW

BROOKHAVEN NATIONAL LABORATORY
BROOKHAVEN NATIONAL LABORATORY
BROOKHAVEN SCIENCE ASSOCIATES
UPTON, NEW YORK 11973
Exploring Life's Mysteries, Protecting its Future

NSLSII NATIONAL SYNCHROTRON LIGHT SOURCE II

DRAWN BY	C. LONGO	3/15/2016
CHECKED BY	C.A. / M.L.	1/2017
VACUUM APPROVAL		
ENGINEER APPROVAL	S. COBURN	1/2017
SUPERVISOR APPROVAL	W. LEE	1/2017
ESH APPROVAL	L. STIEGLER	1/2017
QA APPROVAL	J. ZIPPER	1/2017

PHOTON DIVISION
FXI BEAMLINE
COLLIMATING MIRROR

NEXT ASSY:	PD-FXI-BL-1000	
PROJECT:		

WBS# 6.13.02

D — SHEET SIZE
PD-FXI-BL-1020 — DRAWING/PART NUMBER
B — REVISION
ESH&Q RISK LEVEL A1
SHEET 1 OF 5

C:\Mech-Eng\LT\PD\FXI\BL\PD-FXI-BL-1020.idw

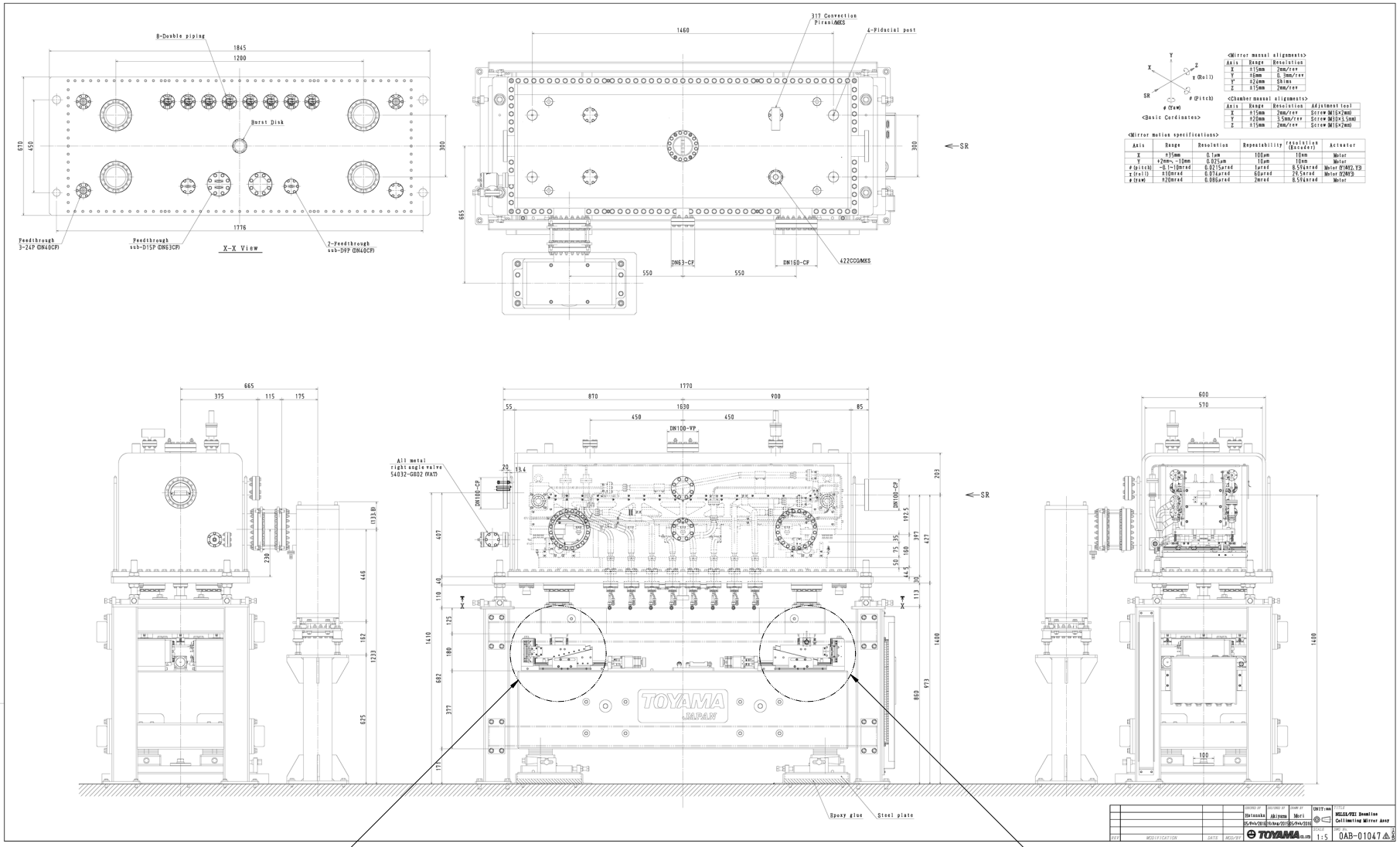

B
DOWNSTREAM WEDGE JACKS, SEE NOTE 3

B
UPSTREAM WEDGE JACK, SEE NOTE 2

VENDOR SUPPLIED DESIGN

D	PD-FXI-BL-1020	B
SHEET SIZE	DRAWING/PART NUMBER	REVISION
ESH&Q RISK LEVEL A1		SHEET 2 OF 5

C:\Mech-Eng\LTP\PD\FXI\BL\PD-FXI-BL-1020.idw

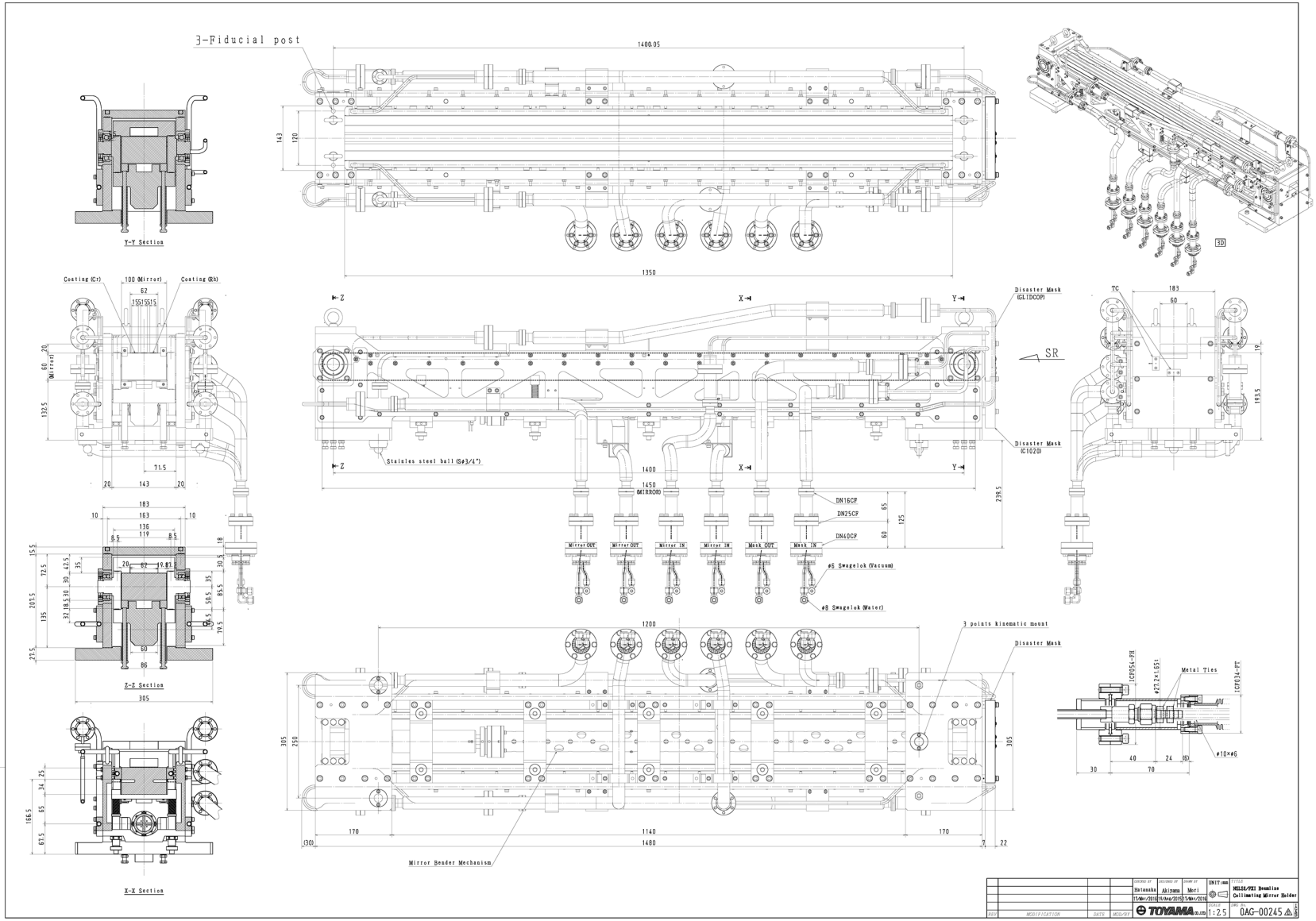

VENDOR SUPPLIED DESIGN

D (SHEET SIZE)	PD-FXI-BL-1020 (DRAWING/PART NUMBER)		B (REVISION)
ESH&Q RISK LEVEL A1		SHEET 3 OF 5	

C:\Mech-Eng\LTP\D\FXI\BL\PD-FXI-BL-1020.dw

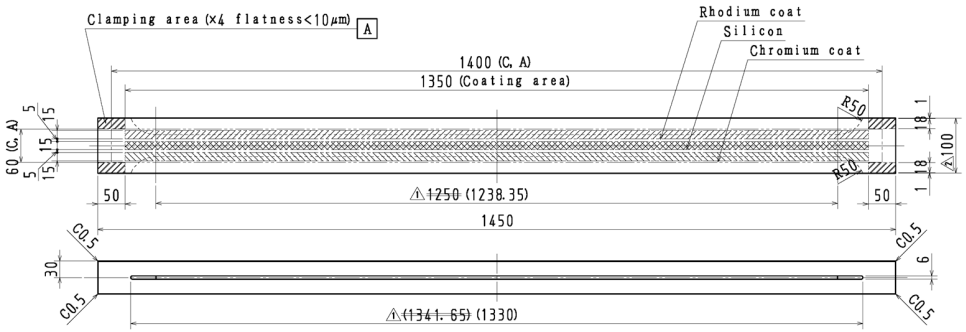

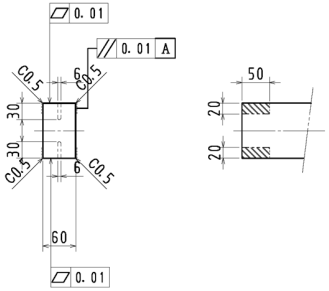

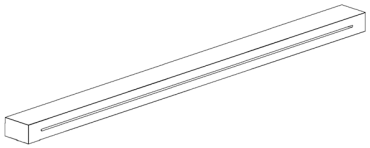

Collimating mirror optical specifications

Mirror material	Single crystal silicon
Material resistivity	≤10 ohm-cm
Reflecting surfaces	Chromium, silicon, rhodium. The rhodium part of the mirror shall be coated with a 60nm ±10nm thick rhodium layer. A 12.5nm ±2.5nm thick chromium binder layer shall be used between the silicon and the rhodium coating. The chr_ omium part of the mirror shall be coated with 60nm ±10nm thick chromium layer.
Minimum active area for each stripe (Si, Cr or Rh)	1350mm×15mm; there shall be a minimum of 2mm and a maximum of 5mm separation between the active areas.
Mirror dimensions	1450 (L) ×100mm (W) ×60mm (T)
Figure (unbent, reflecting surface)	Planar. Tangential radius> 30Km; Sagital radius 3Km
Surface roughness (reflecting surface)	≤0.3nm rms
Tangential slope error (unbent, reflecting surface, no beam)	≤1μrad rms (freq range L^{-1} to $0.5mm^{-1}$)
Sagital figure error (unbent, reflecting surface, no beam)	≤20μrad rms (freq range W^{-1} to $0.5mm^{-1}$)
Surface finish (reflecting surface)	No visible defects or scratches. strain free chamical-mechnical polish.
General finish	All mirror edges shall be chamfered or rounded.
Reference	The mirror will be bent in the tangential direction from flat to 5Km radius.

REV	MODIFICATION	DATE	MOD/BY
1	Change groove length	15/Dec/2015	K. A

CHECKED BY: Hatanaka 06/Jan/2016
DESIGNED BY: Akiyama 05/Nov/2015
DRAWN BY: Akiyama 06/Jan/2016
UNIT: mm
TITLE: NSLS-II FXI Photon Delivery System Collimating mirror
TOYAMA co.,Ltd
SCALE: 1:5
DWG No. 2JG-00848 1
ICS

VENDOR SUPPLIED DESIGN

D	PD-FXI-BL-1020	B
SHEET SIZE	DRAWING/PART NUMBER	REVISION
ESH&Q RISK LEVEL A1	SHEET 4 OF 5	

C:\Mech-Eng\LTP\D\FXI\BL\PD-FXI-BL-1020.idw

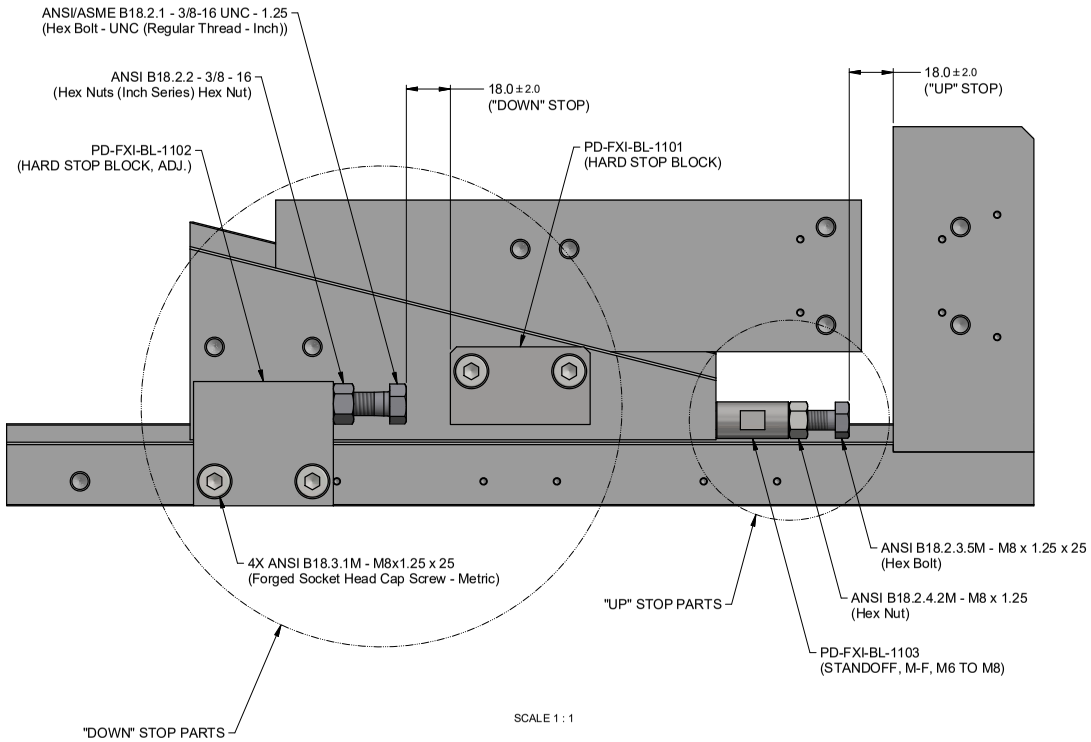

SCALE 1 : 1

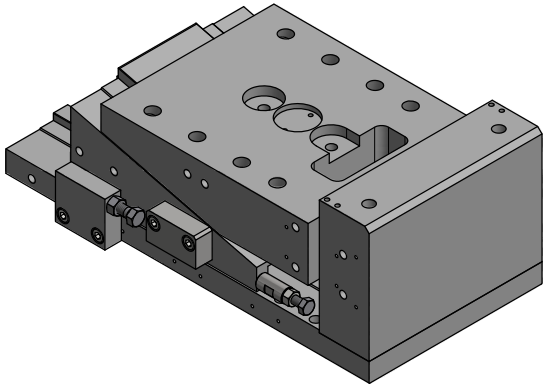

ISO VIEW
SCALE 1 : 2

B

BNL HARD STOP DESIGN

D (SHEET SIZE)	PD-FXI-BL-1020 (DRAWING/PART NUMBER)	B (REVISION)
ESH&Q RISK LEVEL	A1	SHEET 5 OF 5

C:\Mech-Eng\LTP\D\FXI\BL\PD-FXI-BL-1020.idw