Refer to Photon Sources Directorate procedure "Design Reviews" in the Photon Sciences Document Center for complete details and requirements for completing design reviews. Contact the PSD Quality Representative for further guidance.

PHOTON SCIENCES DIRECTORATE
BROOKHAVEN NATIONAL LABORATORY

Report No. PS-DRR-1064
(Obtain from Quality Group)

DESIGN REVIEW REPORT

EDP Report No. (if applicable)

The Design Review Report shall include at a minimum:

- The title of the item or system;
- A description of the item;
- Design Review Report Number;
- The ESH&Q risk level;
- The design parameters;
- The type of design review;
- The date of the review;
- The names and association of the reviewers;
- The major comments and concerns of the reviewers;
- Any reference not appearing in the EDP used to support the design during the Design Review meeting;

TYPE OF REVIEW:

☒ **INITIAL** ☐ **INTERMEDIATE** ☐ **FINAL**

Prepared By:
S. Sherwood

Review Date: 11/7/17

TITLE of ITEM/SYSTEM: **18-ID (FXI) Collimating Mirror Hard Stop**

PRESENTED BY: Wah-Keat Lee

ESH&Q Risk Level: **A-2**
(Application of the Graded Approach Table)

PURPOSE/DESCRIPTION:
The purpose of the collimating mirror hard stops is to limit the motion of the collimating mirror.

REVIEWERS (ASSOCIATION): S. Sherwood (Chair), L. Stiegler (ESH), S. Sharma (Mechanical Engineer), B. Kosciuk (Mechanical Engineer), D. Bacescu (Mechanical Engineer), Z. Zhong (Rad Safety), J. Zipper (QA), S. Moss (USI)

Attendees: J. Adams, D. Bacescu, B. Kosciuk, S. Moss, S. Sharma, S. Sherwood, L. Stiegler, Z. Zhong, J. Zipper,

DISTRIBUTION:
All reviewers and presenter.

Attachments: ☐ **Data Sheets** ☐ **Calculations (Checked and countersigned)** ☒ **Support documentation**
☐ **See Continuation Page** ☐ **Design Checklist**

MAJOR COMMENTS & CONCERNS OF REVIEWERS

Collimating Mirror Hard Stop

Wah-Keat provided an overview of the motions for the collimating mirror subject to the hard stop design. Wedge type jacks are translated horizontally to translate the mirror vertically.

In addition to the hard stops there are encoders with limit switches that stop the motion however these are not credited controls.

The new hard stop design for the collimating mirror uses threaded stand offs and bolts that are attached to the wedge blocks.

The motor, lead screw and gear box driving force parameters used for analysis were presented and discussed. Full efficiency of the gear reducer is assumed and an efficiency drive force of 0.3 is applied to the lead screw. It was noted that the motor stepper gear box is for resolution and not for thrust (able to hand turn the lead screw).

Review members then reviewed the FEA analysis provided by Toyama. It was noted that the deformation and the stress on the screws to elastically deform, strip/pull threads, or shear completely. Calculations performed by Bernie confirm that the screws will break based on the input as is.

A discussion was held regarding possible solutions including:

1. Manage the impact load via a reinforced contact bracket. With space constraints and design cost consideration it was agreed this is not the preferred solution.
2. Replace the motor with a lower torque motor. This would reduce the drive force and minimize stresses and deformations at the stopper block.
3. Manage the drive torque via the shaft coupler. Solutions available for 'break-away' or 'flexi'' type couplers.

Reviewers agreed that solution 3 was best path.

Action 1: Check maximum load rating of the coupling. Replace with break-away, max torque rating coupling and update the calculation. (Action not tracked via ATS)

All committee members acknowledged that the review for this component will reconvene once the action resulting from this review is addressed.

REVIEWED DRAWINGS / SPECIFICATIONS	

APPROVAL:

Please forward completed original to the PSD Quality Assurance Group.

X

Stephen Sherwood
Design Review Chair
Signed by: Sherwood, Stephen

Sherwood, Stephen

Subject:	18-ID (FXI) Collimating Mirror Hard Stop Mechanism - FDR
Location:	Bldg. 745 Rm 177
Start:	Tue 11/7/2017 2:30 PM
End:	Tue 11/7/2017 3:30 PM
Recurrence:	(none)
Meeting Status:	Meeting organizer
Organizer:	Sherwood, Stephen
Required Attendees:	Lee, Wah-Keat; Sharma, Sushil; Kosciuk, Bernard; Adams, Julian; Bacescu, Daniel; Zhong, Zhong; Zipper, Joseph; Stiegler, Lori; Moss, Steven H; Buckley, Michael
Optional Attendees:	Hulbert, Steven
Resources:	Bldg. 745 Rm 177

Hi Everyone,

You are invited to FDR for a Hard Stop Mechanism for the FXI Collimating Mirror. The presentation and review materials will be sent out prior to the review. The review team will consist of:

S. Sherwood (chair)
D. Bacescu (Mechanical Engineering)
B. Kosciuk (Mechanical Engineering)
S. Sharma (Mechanical Engineering)
L. Stiegler (Safety)
Z. Zhong (Rad Safety)
J. Zipper (QA Engineer)

Please let me know if you are not able to attend and advise of a possible delegate, if needed.

Sue- Can you please reserve the room for us?

Thanks,
Steve

18-ID (FXI) Collimating Mirror Hard Stop Mechanism
~~Final~~ Design Review – Attendance Sheet

PRELIMINARY
55

Date: November 7, 2017

Name	Title	Department/Division or Company
BERNARD KOSCIUK	MECH ENGINEER	PS/DIAGNOSTICS
Sushil Sharma	GL(ME)	ASD
JOE ZUPPER	QA	NSLS II
Lori Stiegler	ESH	HP-PS
Zhong Zhong	physicist	NSLS II
Steve Hulbert	"	"
STEVE MOSS	~~ATM~~/Gen Ops Mgr	NSLS II/RCD
STEPHEN SHERWOOD	ROS ENG.	NSLS II

Final Design Review for the new 18-ID (FXI) collimating mirror hard stop mechanism

Wah-Keat Lee
November 7, 2017

Issue:

At 18-ID (FXI) beamline, the pink beam reflected from the collimating mirror (white beam optic) can have up to ~ 1 kW power. In order to ensure the safe capture of the pink beam, motion limits on the mirror are needed.

The vendor has designed and implemented hard-stops for the associated mirror stages, but these were deemed insufficient by the IRR committee.

The charge for this committee is to review the <u>new</u> hard-stop design and analysis from the vendor.

Pink beam from CM is ~ 1 kW.
Need to consider mis-steered pink beam.

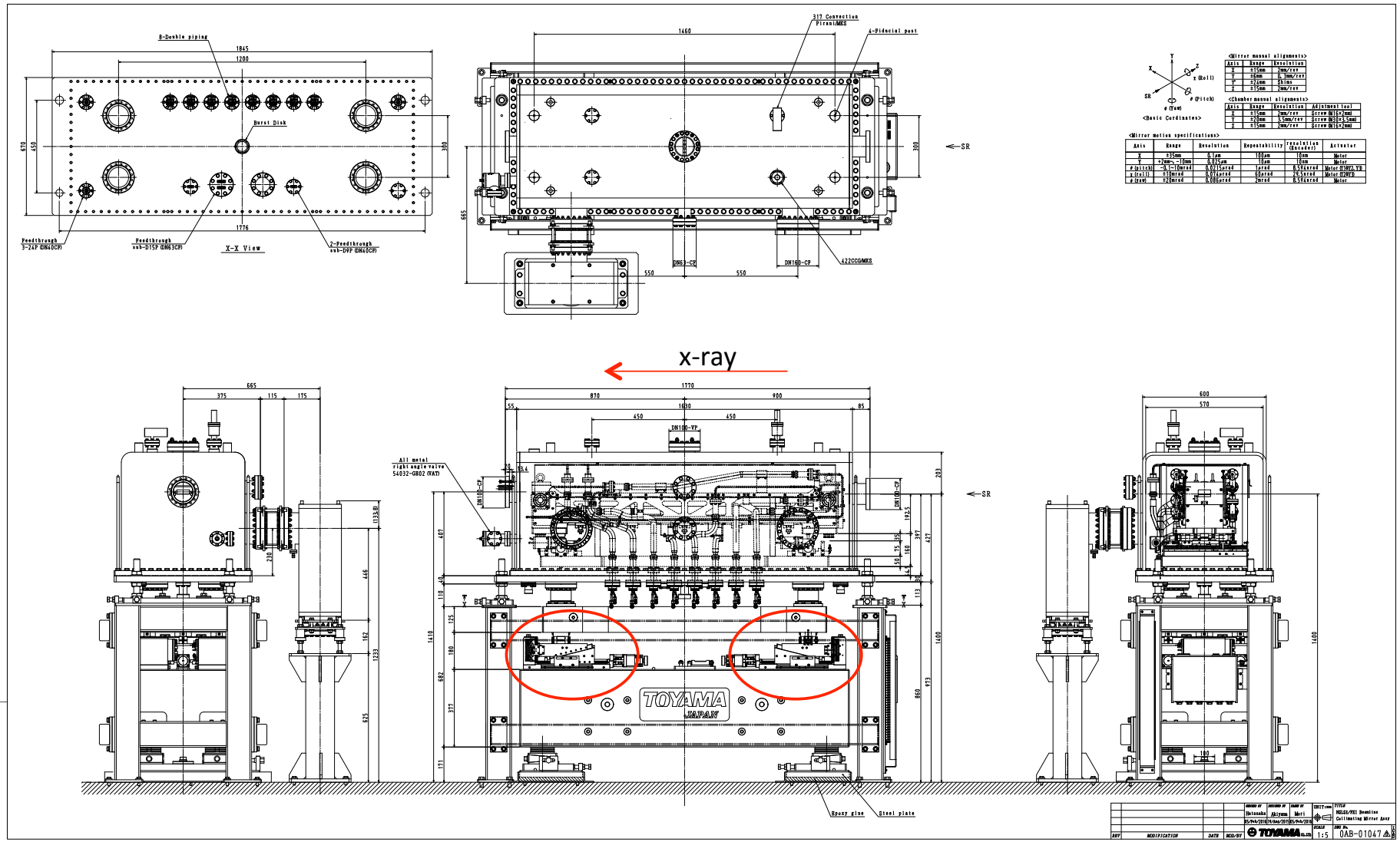

Mirror base is supported kinematically by 3 vertical 'wedge' jacks to enable Y translation, pitch and roll

Motion limit switches and absolute encoder

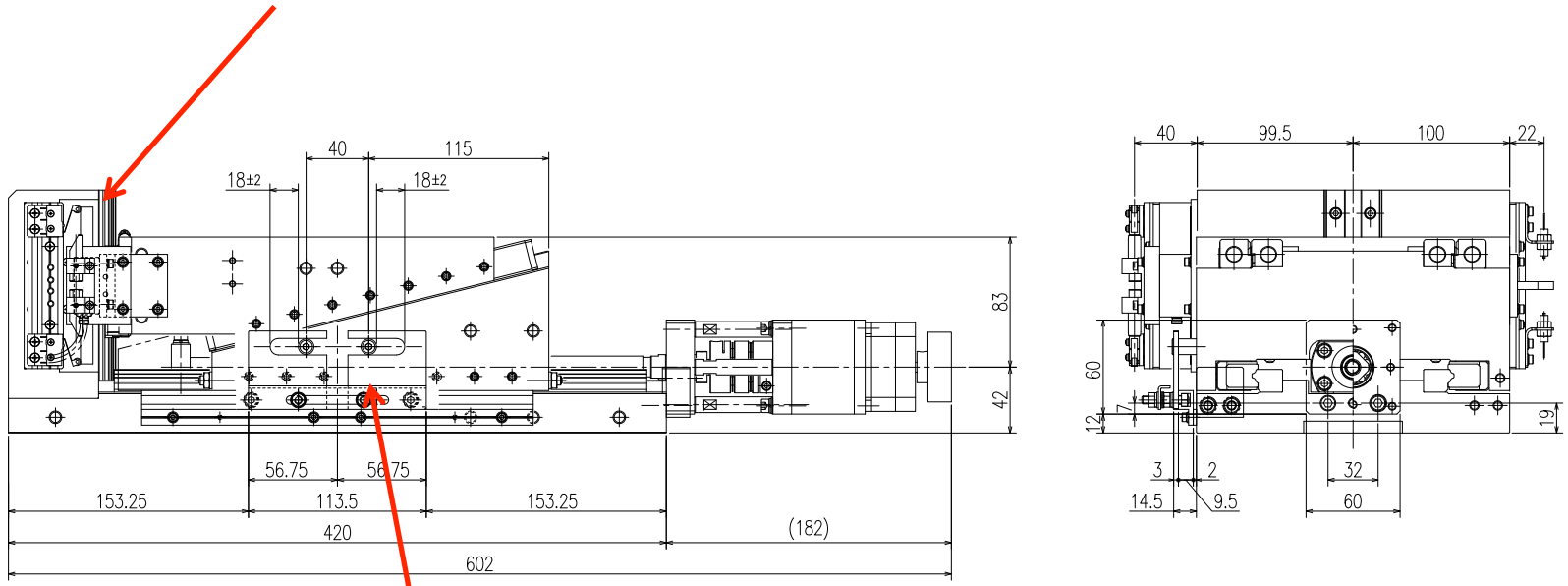

Old hard-stop design (implemented)

Note). The wedge is X:Y=4:1 ratio

REV	MODIFICATION	DATE	MOD/BY
1	HARDSTOPS SET TO ENABLE 18mm +/- 2mm TRAVEL	9/15/2017	CL

CHECKED BY: Akiyama 15/Sep/2017
DESIGNED BY: Akiyama 15/Sep/2017
DRAWN BY: Mori 15/Sep/2017
UNIT: mm
TITLE: Hard stopper
SCALE: 1:2
DWG No. 150183DD-1
TOYAMA CO., LTD.

Additional information:

There are usual motion limit switches that are set 'inside' the hard-stop range

The stages are encoded with absolute encoders

The DeltaTau motion controller is run in a closed loop manner with the absolute encoders

In the event that the stage hits resistance and does not move by the right amount (following error), the DeltaTau will cut power to the motor

However, these are not considered as 'credited control' for safety. That is why a 'hard-stop' is needed.

Close-up showing size

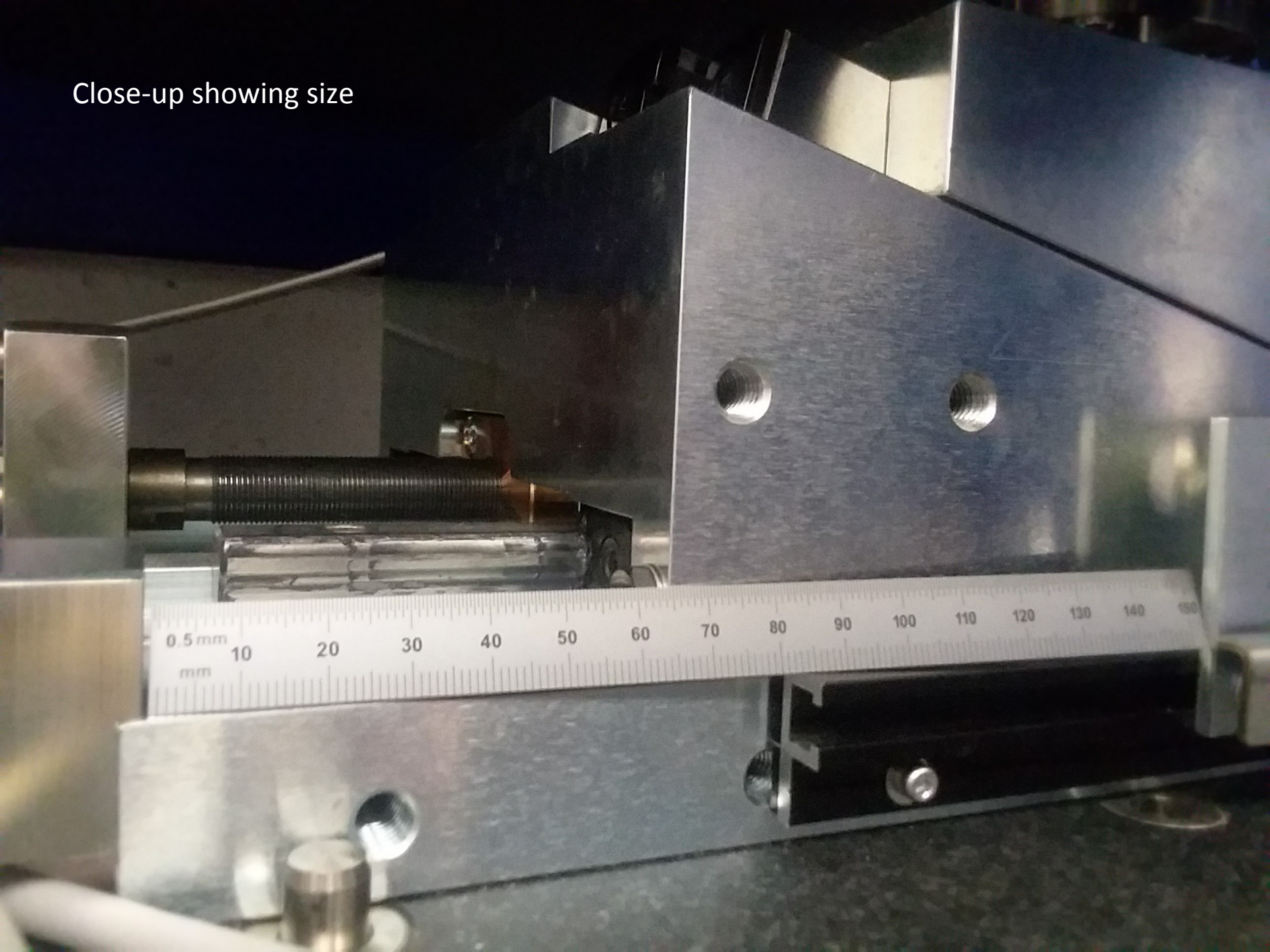

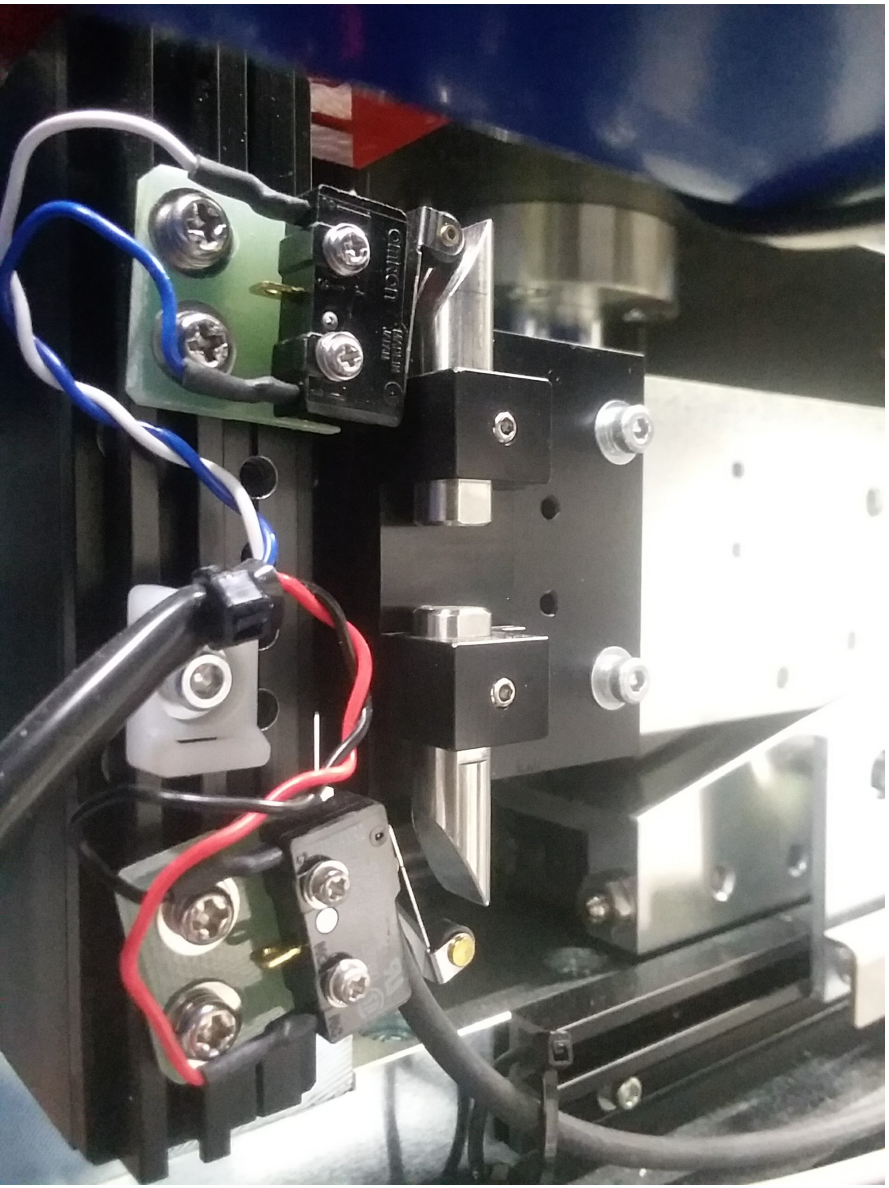

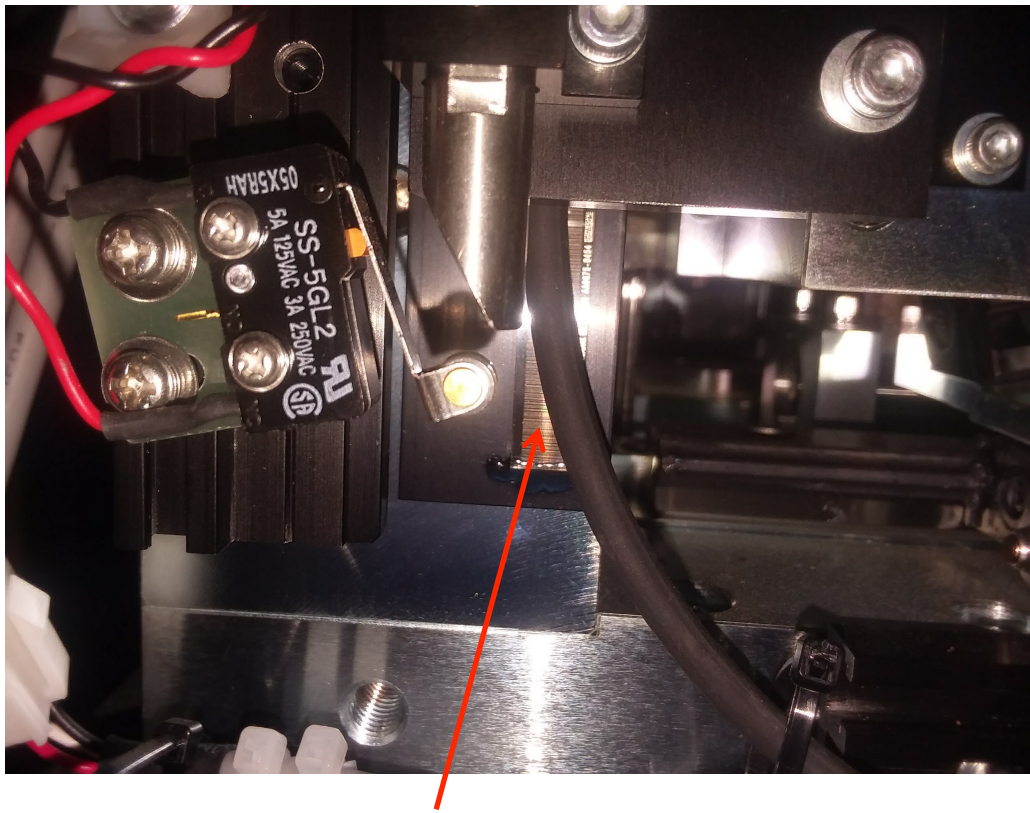

Absolute encoder

Limit switches

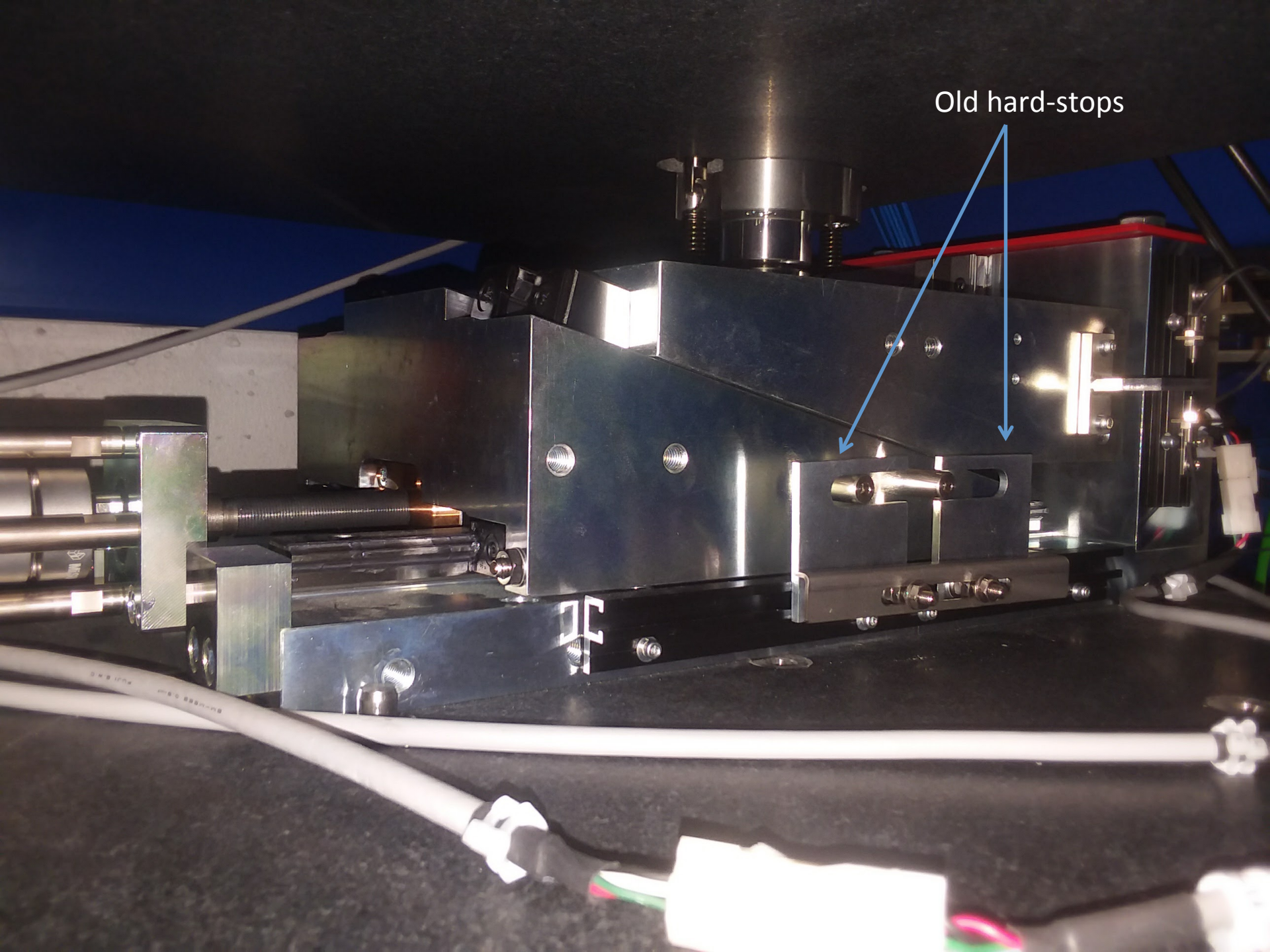
Old hard-stops

New hard-stop design

Limit switches and absolute encoder

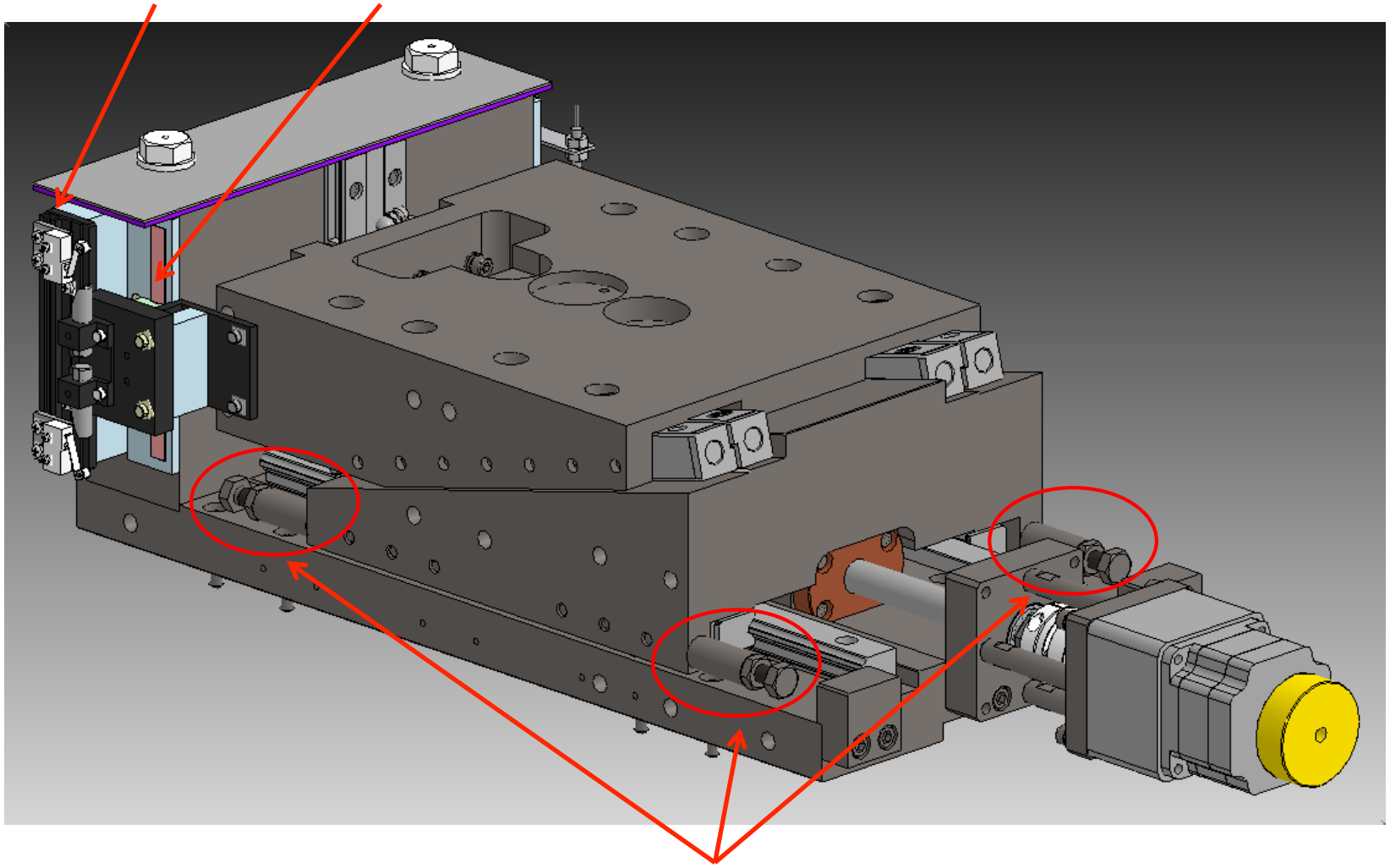

New design hard stops

Basis for driving force used in FEA (vendor (Toyama) supplied information)

$F = 2\pi\eta T/R$
T = Torque = 0.48 N-m (motor specs)
R = Screw lead = 1 mm
η = Efficiency that converts torque to driving force = 0.3
F = driving force

F = 904 N
The motor has a 50X gear reducer: 904 N x 50 = 45200 N

There are two hard stops each direction: 45200 N/2 = 22600 N

So, for FEA (half model), use 22600 N as driving force.

TOYAMA

Structural analysis for FXI CM hard stop

October. 27, 2017

TOYAMA *Co., Ltd*

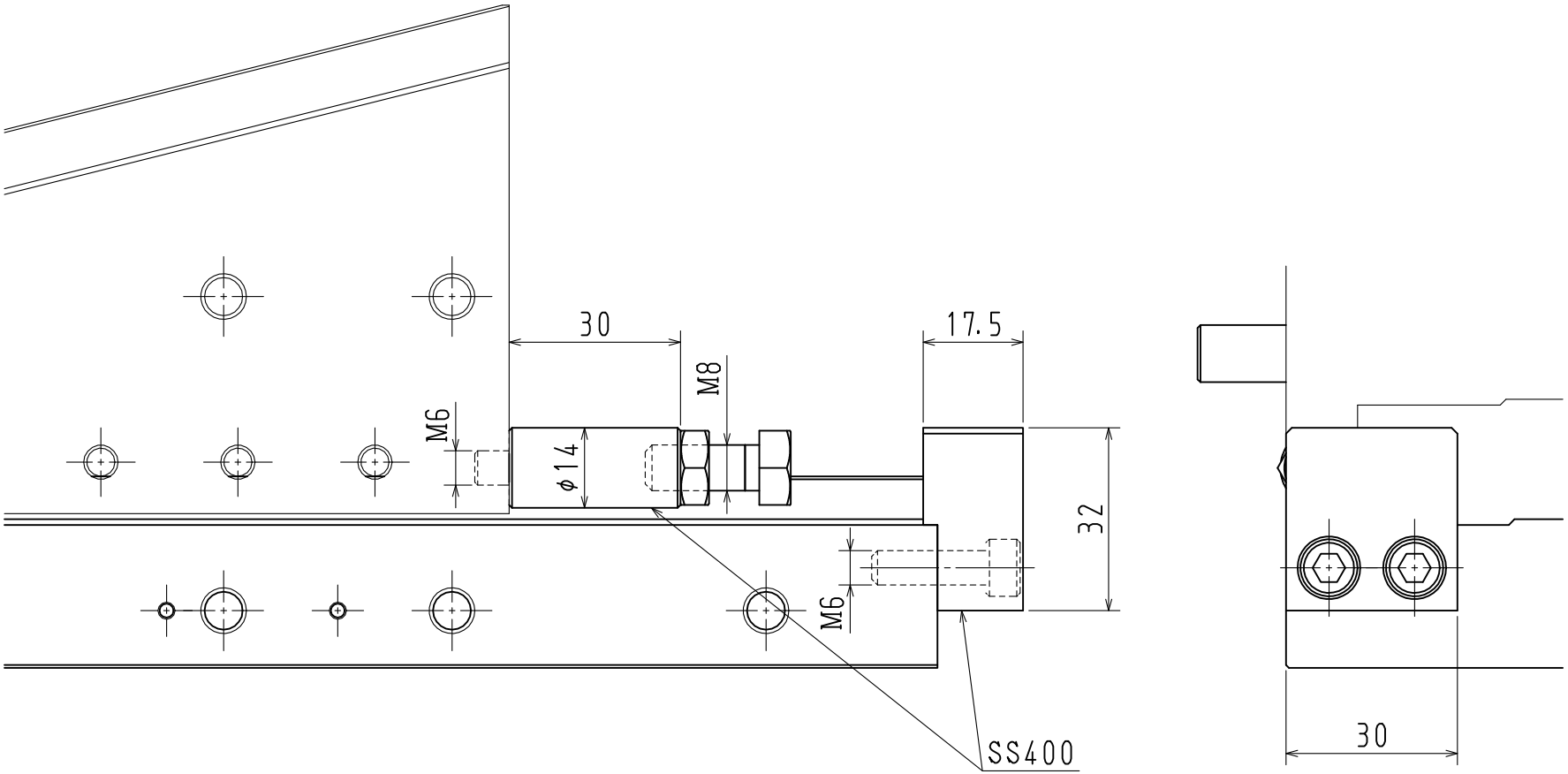
30
17.5
M8
M6
φ14
32
M6
SS400
30

Analysis model

TOYAMA

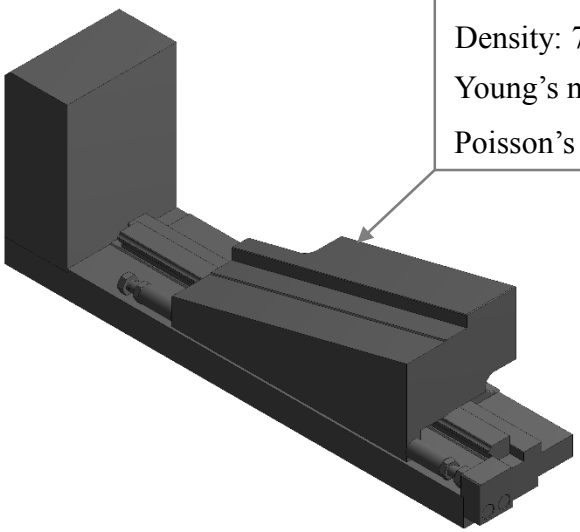

Iron (SS400)

Density: 7.9 g/cm^3

Young's module: 206 GPa

Poisson's ratio: 0.3

Fig.1.1 Bird's eye view

Fig.1.2 Top view

Fig.1.3 Front view

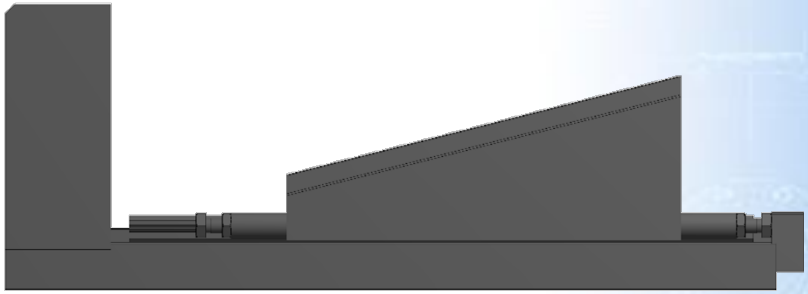

Fig.1.4 Side view

Contact condition

We assumed that the following two contact surfaces are permitted to slide without separation.
All other than these two locations are adherence.

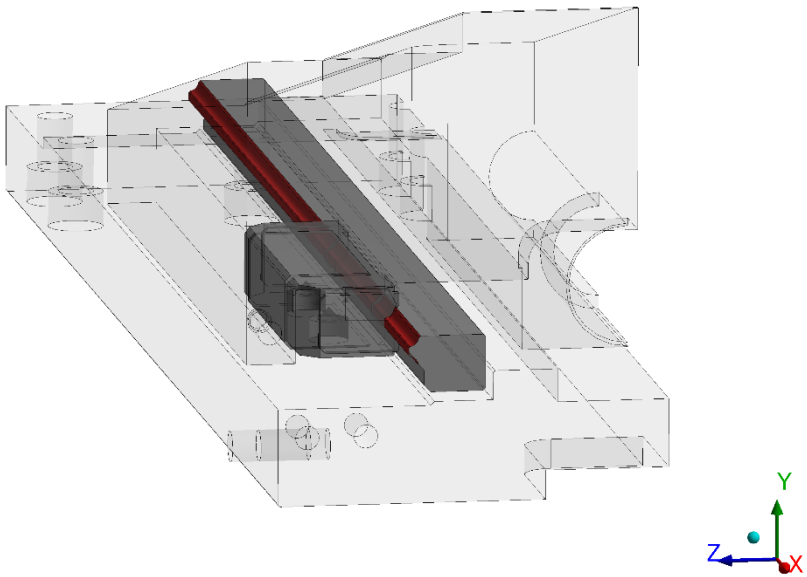

Fig.2.1 Slide rail

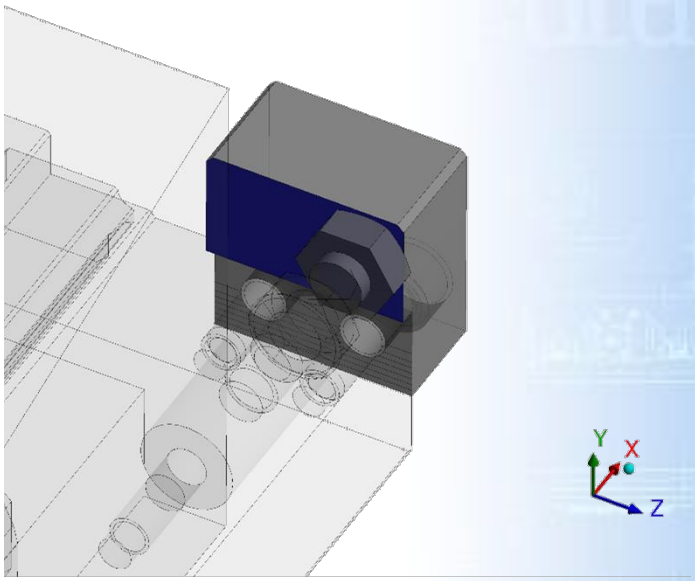

Fig.2.2 Between the stopper block and the bolt

Boundary conditions

TOYAMA

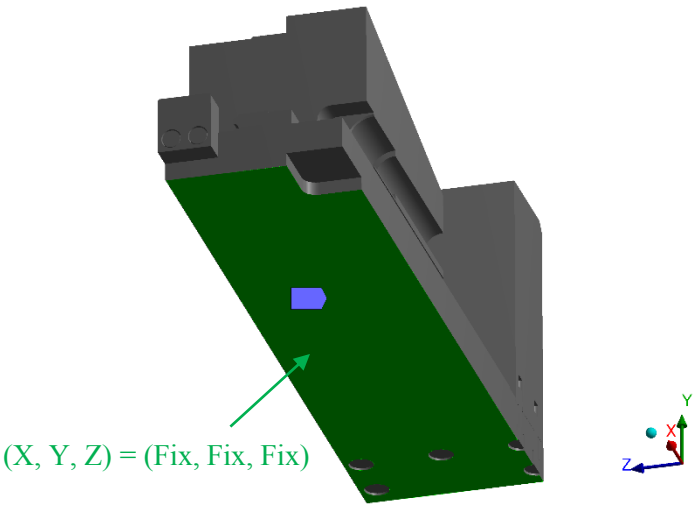

Fig.3.1 Support condition

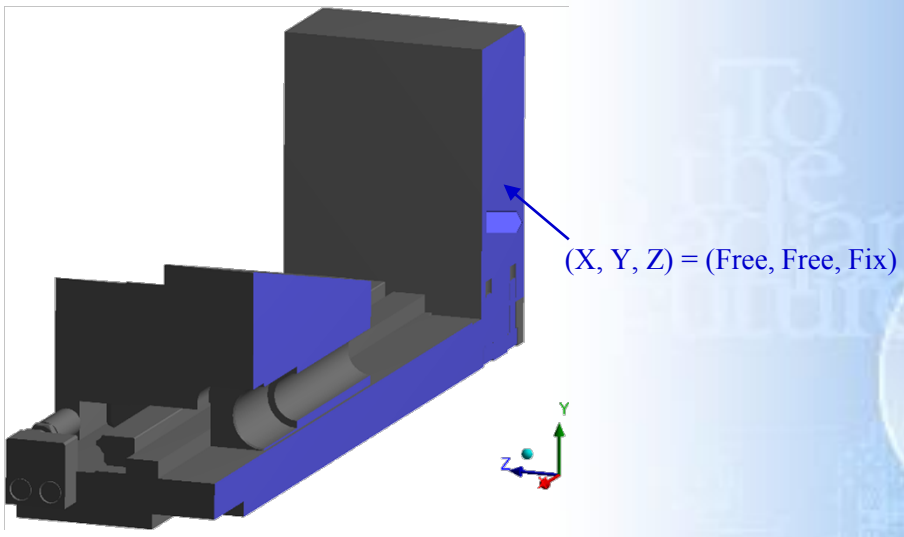

Fig.3.2 Boundary condition for half model

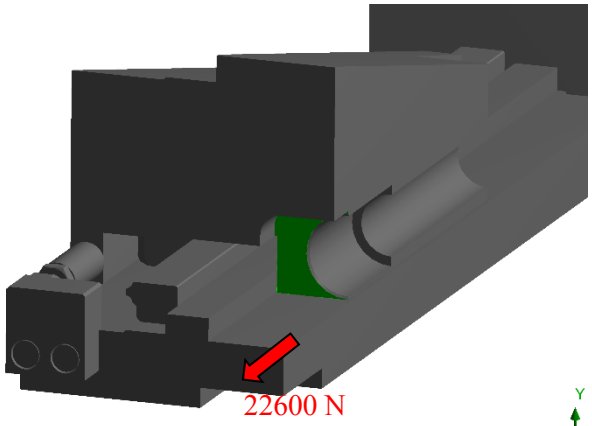

Fig.3.3 Load condition for half model

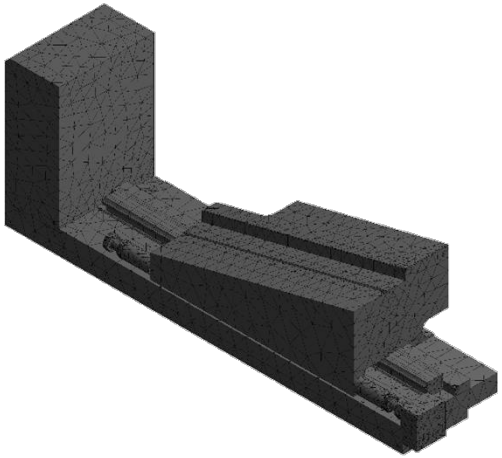

Fig.3.4 Mesh condition

* Analysis was carried out with a half model since it's symmetric.
* Load force of 22600 N corresponds to motor maximum torque of 0.48 N・m.
* All parts are Iron (SS400).

Analysis result

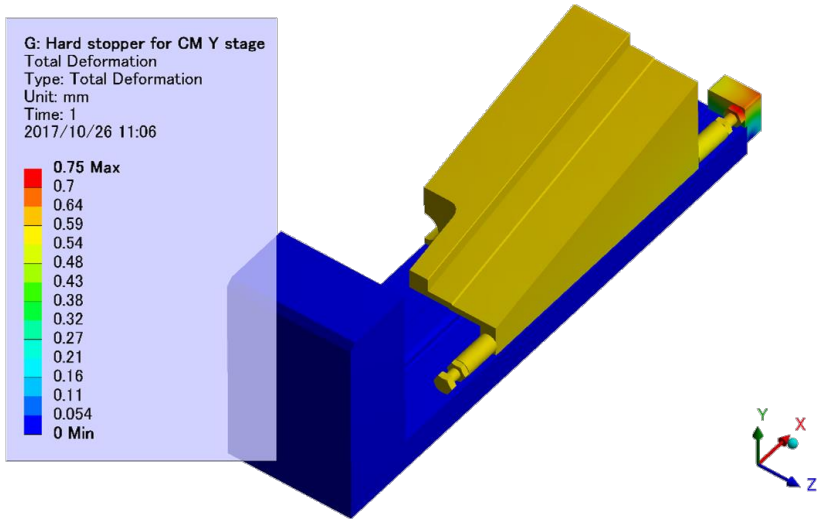

Fig.4.1 Deformation profile

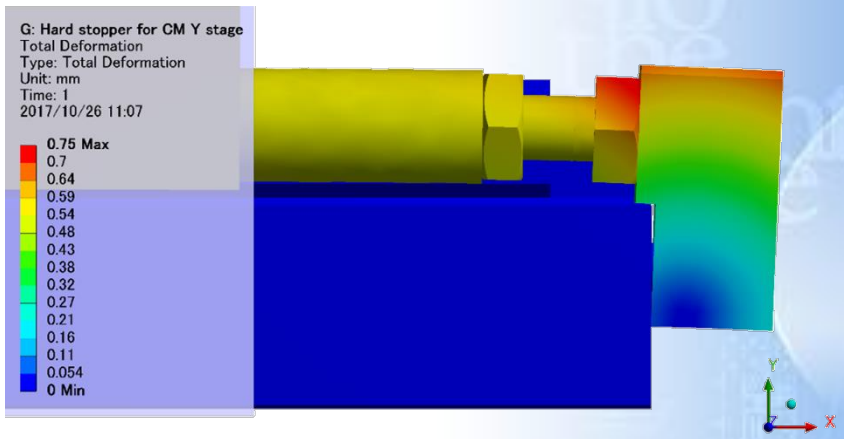

Fig.4.2 Enlarged view of the hard stopper

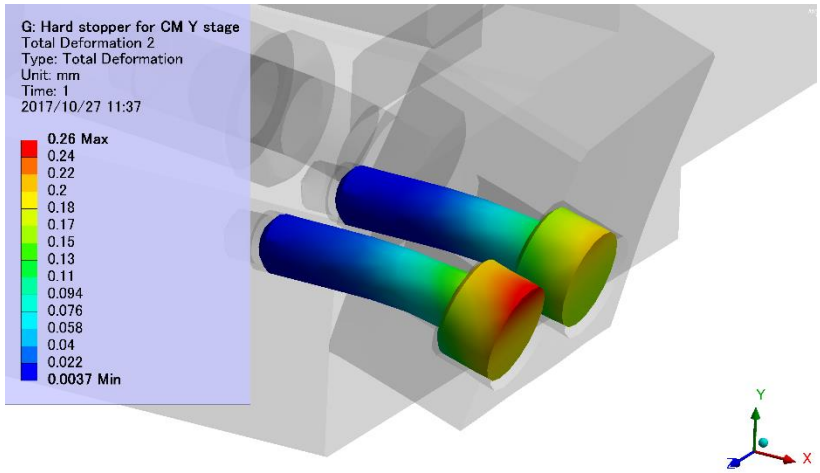

Fig.4.3 Bolt deformation profile

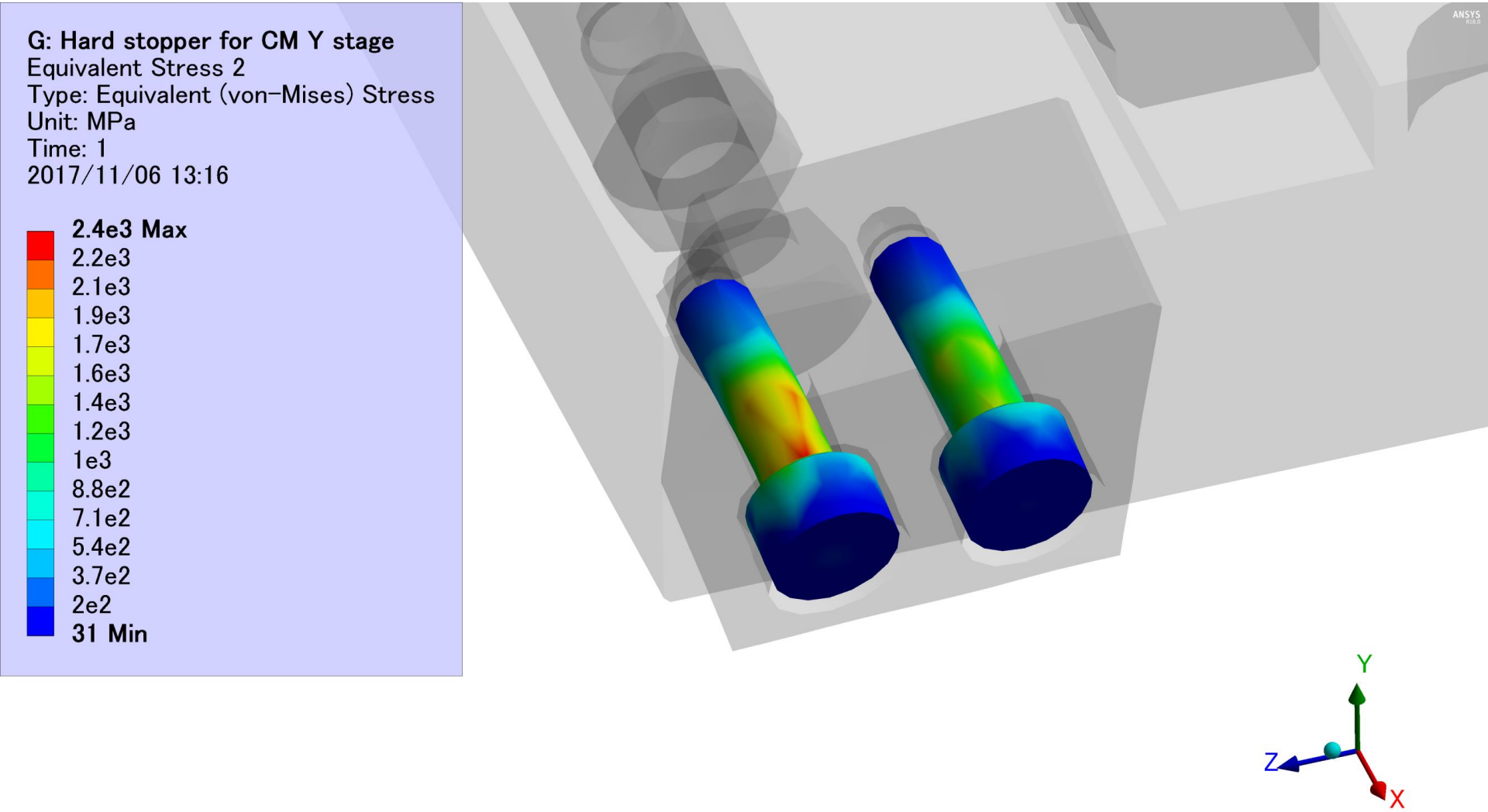
G: Hard stopper for CM Y stage
Equivalent Stress 2
Type: Equivalent (von-Mises) Stress
Unit: MPa
Time: 1
2017/11/06 13:16
2.4e3 Max
2.2e3
2.1e3
1.9e3
1.7e3
1.6e3
1.4e3
1.2e3
1e3
8.8e2
7.1e2
5.4e2
3.7e2
2e2
31 Min
ANSYS
Y
Z
X