National Synchrotron Light Source

BROOKHAVEN
NATIONAL LABORATORY

Building 743, National Synchrotron Light Source
Brookhaven National Laboratory
Upton, NY 11973-5000
Phone 631 344-6110
tanabe@bnl.gov

managed by Brookhaven Science Associates
for the U.S. Department of Energy

Memo

Date: October 31, 2017
To: Instrument Readiness Review Team
From: Toshi Tanabe, NSLS-II Insertion Devices Group Leader J. T.
Subject: Modifications to the EPU60 at Cell 7 for the SST Beamline

Prior to installation at NSLS-II, modifications were made to the mechanical and controls systems for the EPU60, installed at ring cell 7. These modifications are outlines below:

Mechanical Modifications

1. A lower plinth was designed and fabricated to bring the magnetic center to the NSLS-II beam height of 1.2m. A set of hold-down clamps was incorporated into the plinth to retain the device since it was resting on a 3-point kinematic support.
2. Integrated limit and kill switches were installed for both the gap and phase axes. These were Euchner-4-channel switch assemblies with coordinating trip dog rails. Trip dogs were equipped with micro adjustment for precision control.
3. A lead (Pb) radiation shield assembly was installed on each of the six linear encoder read-heads to protect the solid state circuitry of these devices.
4. A new magic finger block was designed and fabricated to allow for additional magic finger magnets. The original support was modified to accept the newly designed block.

List of drawings added:
SR-ID-SST-EPU60-1001
SR-ID-SST-EPU60-1002
SR-ID-SST-1005
SR-ID-SST-1004
SR-ID-SST-1003
SR-ID-SST-0025
SR-ID-SST-0021
SR-ID-SP-1000 (Plinth drawing)
Refer to ECO-005237

Controls Modifications

1. Nearly everything related to controls is new on the EPU60 device. The stepping motors, brakes and linear incremental encoders were retained from the original. Limit switches were replaced. Kill switches and e-stops were added.
2. The old control system was removed and a new control system was designed and built. The design was based on the control system for the Kyma EPUs on the ESM beamlines.

a. This control system uses a Delta Tau Brick stepping motor controller and Reer Safety PLC to read the encoders and react to limit, kill, and e-stop switch inputs. The controller, safety PLC, power supplies, circuit breakers, and solid-state relays used for the control system were all new.

3. The software running on the Delta Tau Brick controller and the Reer Safety PLC were adapted from the software from COSYlab used to run the Kyma EPU49. This software was simplified and reconfigured so that it was more compartmentalized, easier to understand, and easier to maintain.

cc:
A. Ackerman
D. Bergman
A. Broadbent
P. Cappadoro
E. Cheswick
D. Fischer
G. Ganetis
J. Kirkland
B. Kosciuk
H. Robinson
K. Rubino

REV	DESCRIPTION	DATE	BY	CHECKED	APP
A	INITIAL RELEASE	07-26-17	DB	MP	DB

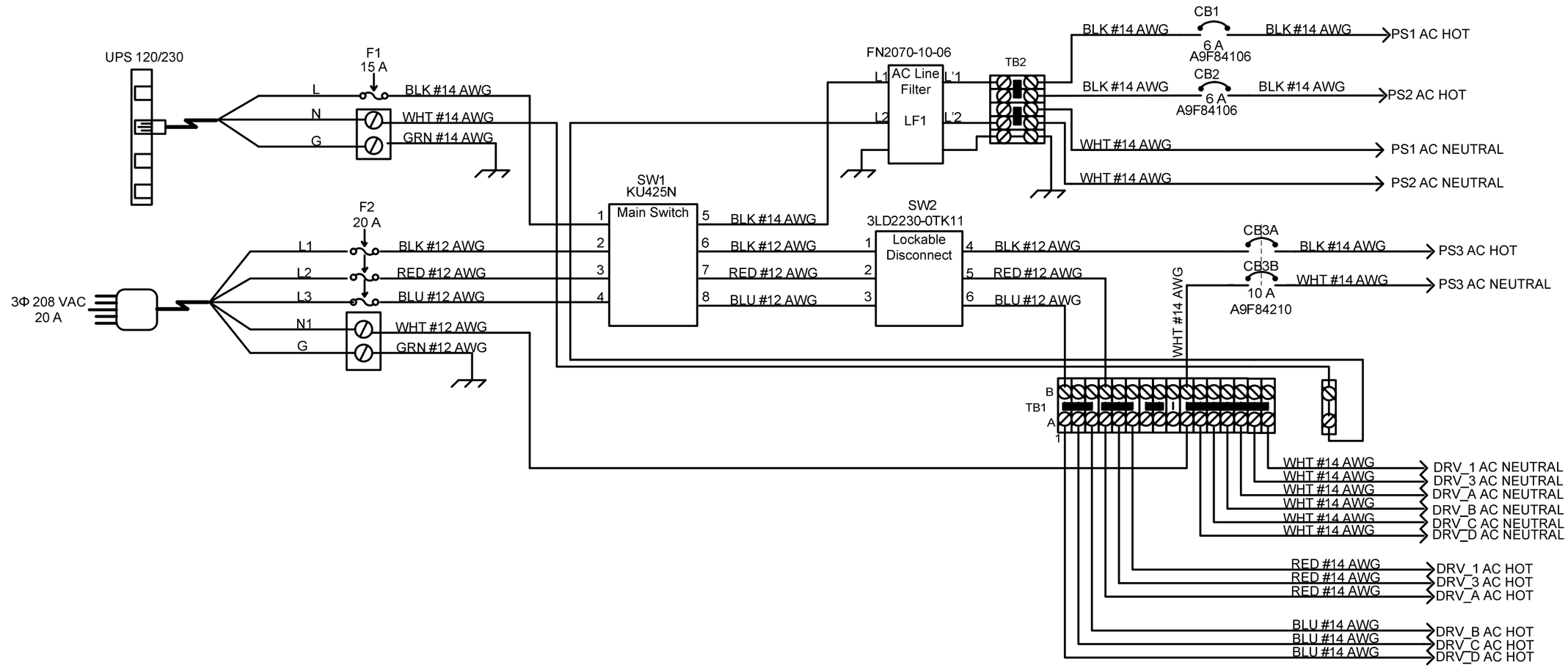

LT-EL-BL-ID-EPU-1070-90

BROOKHAVEN NATIONAL LABORATORY

BROOKHAVEN NATIONAL LABORATORY
BROOKHAVEN SCIENCE ASSOCIATES
UPTON, NEW YORK 11973
Exploring Life's Mysteries, Protecting its Future

NSLS II NATIONAL SYNCHROTRON LIGHT SOURCE II

UNLESS OTHERWISE SPECIFIED
INTEGER TOLERANCES ± .06
DECIMAL TOLERANCES
.X ± .030
.XX ± .015
.XXX ± .010
ANGULAR TOLERANCE ± 0.5°
UNSPECIFIED RADII .02 MAX
125 BREAK SHARP CORNERS AND EDGES
FINISH MAX .03 MIN .005

UNLESS OTHERWISE SPECIFIED DIMENSIONS ARE IN INCHES
DIMENSIONS IN [*.**] ARE MILLIMETERS EQUIV. FOR REF. ONLY

ESH&Q RISK LEVEL A-2

INTERPRET DRAWING AS PER ANSI Y14.5 OR Y32.2		DATE	OUTSTANDING ECN'S
DRWN BY	M.PFEFFER	07-26-17	
CHK BY	J.MALLEY	07-26-17	
ENG APP	D.BERGMAN	07-26-17	
SUPV APP	G.GANETIS	08-04-17	
QA APP	E. CHESWICK	08-02-17	
ESH APP	B. LEE	08-02-17	

WIRING DIAGRAM

NSLS-II 7-ID (SST2) EPU60 GAP AND PHASE MOTOR CONTROLS

LT-EL-BL-ID	LT-EL-BL-ID-EPU-1070-90	A
DRAWING DIRECTORY	DRAWING NUMBER	REV

COMPUTER REPRODUCIBLE | SCALE: N/A | SHEET 1 OF 10

JOB NUMBER	USED ON DWG. NO.

REV	DESCRIPTION	DATE	BY	CHECKED	APP
	SEE SHEET 1				

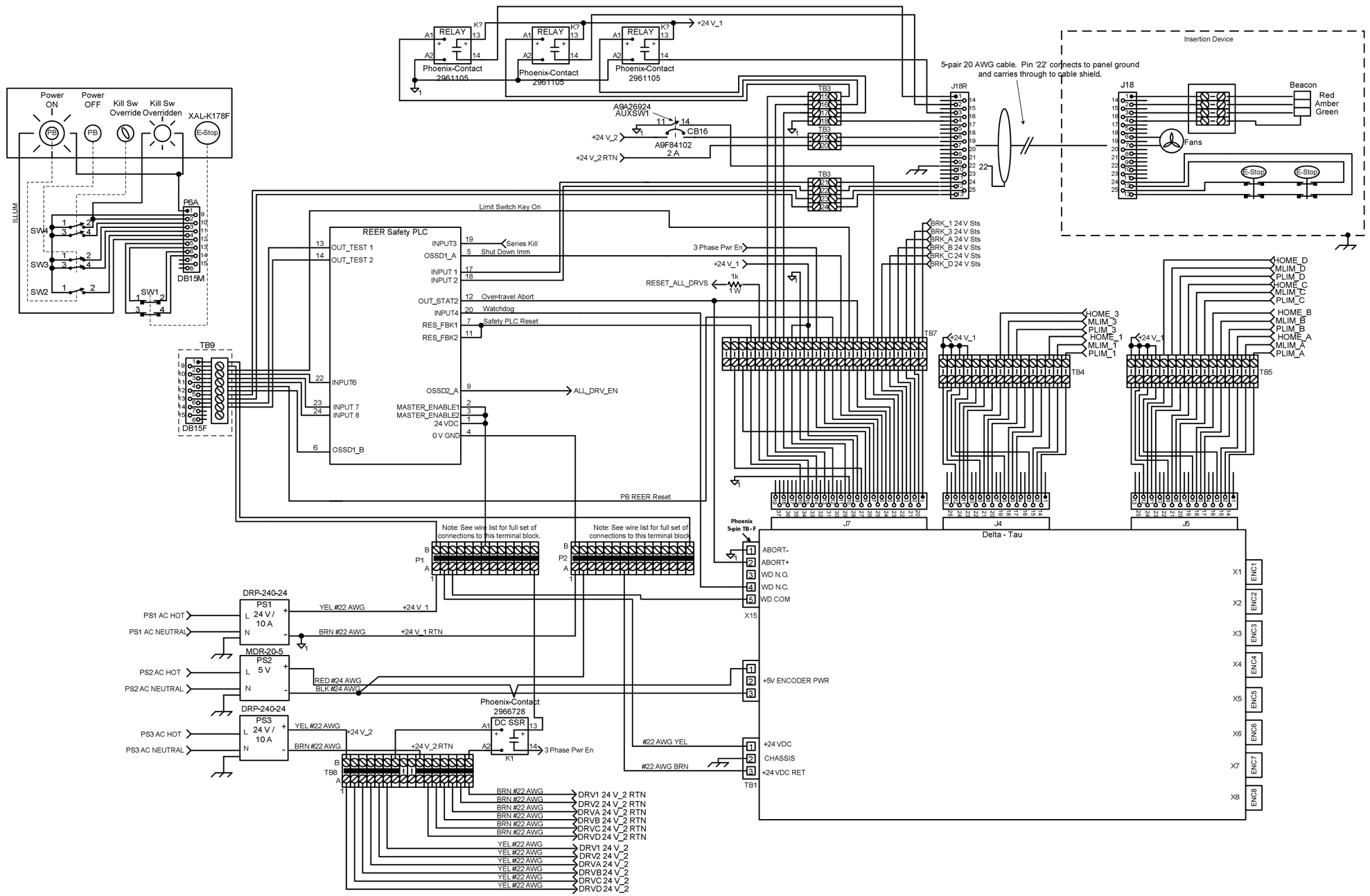

LT-EL-BL-ID-EPU-1070-90

LT-EL-BL-ID	LT-EL-BL-ID-EPU-1070-90	A
DRAWING DIRECTORY	DRAWING NUMBER	REV
COMPUTER REPRODUCIBLE	SCALE: N/A	SHEET 2 OF 10

REV	DESCRIPTION	DATE	BY	CHECKED	APP
	SEE SHEET 1				

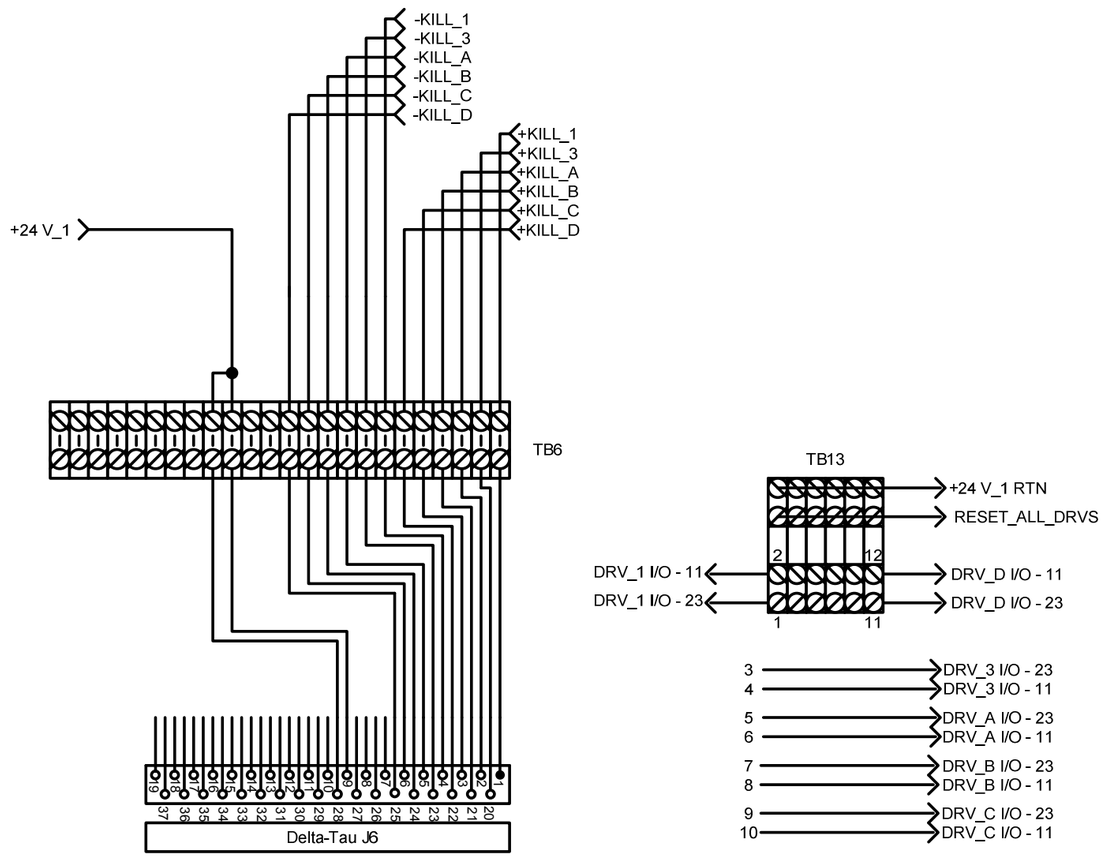

LT-EL-BL-ID-EPU-1070-90

LT-EL-BL-ID DRAWING DIRECTORY	LT-EL-BL-ID-EPU-1070-90 DRAWING NUMBER	A REV
COMPUTER REPRODUCIBLE	SCALE: N/A	SHEET 3 OF 10

REV	DESCRIPTION	DATE	BY	CHECKED	APP
	SEE SHEET 1				

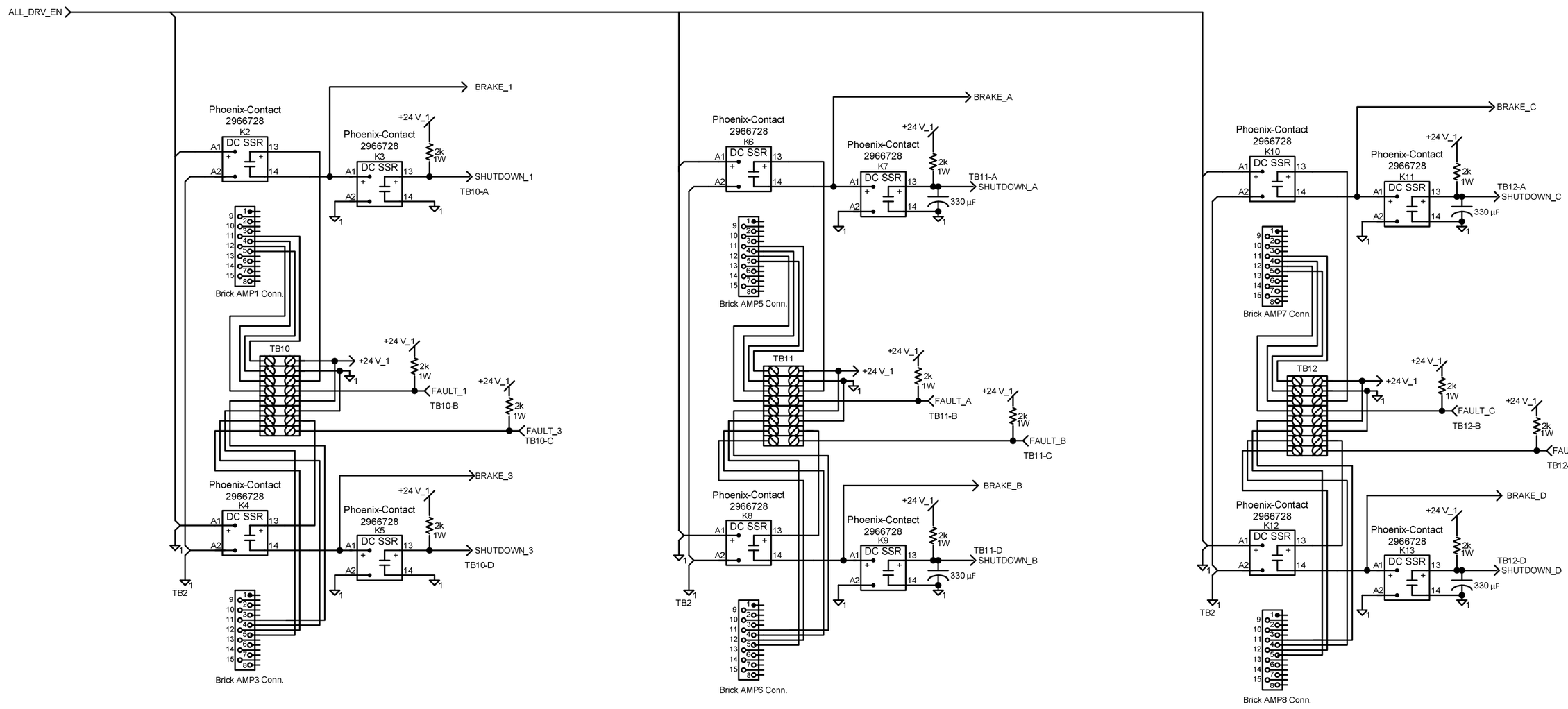

LT-EL-BL-ID-EPU-1070-90

LT-EL-BL-ID DRAWING DIRECTORY	LT-EL-BL-ID-EPU-1070-90 DRAWING NUMBER	A REV
COMPUTER REPRODUCIBLE	SCALE: N/A	SHEET 4 OF 10

REV	DESCRIPTION	DATE	BY	CHECKED	APP
	SEE SHEET 1				

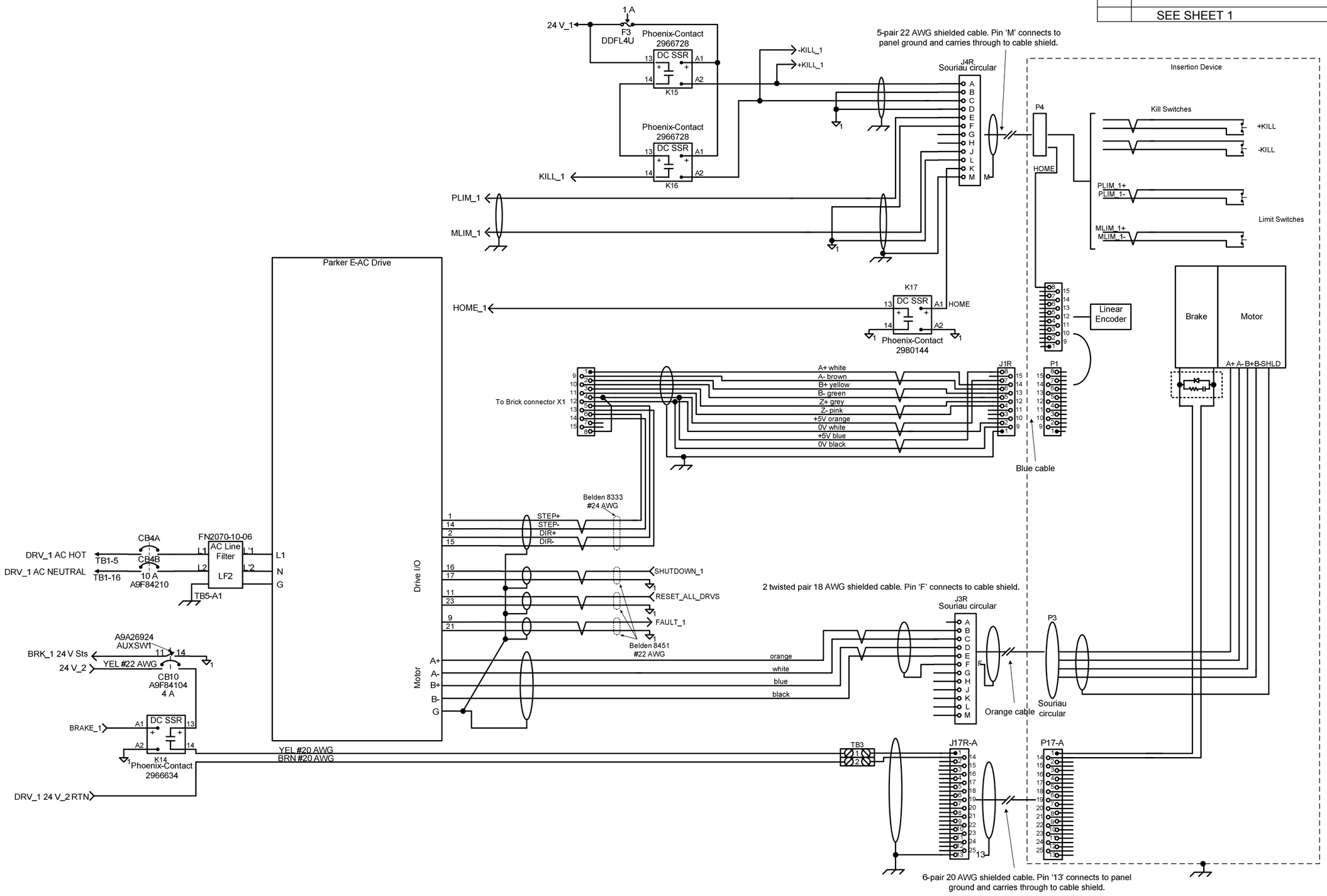

LT-EL-BL-ID	LT-EL-BL-ID-EPU-1070-90	
DRAWING DIRECTORY	DRAWING NUMBER	REV
COMPUTER REPRODUCIBLE	SCALE: N/A	SHEET 5 OF 10

LT-EL-BL-ID-EPU-1070-90

REV	DESCRIPTION	DATE	BY	CHECKED	APP
	SEE SHEET 1				

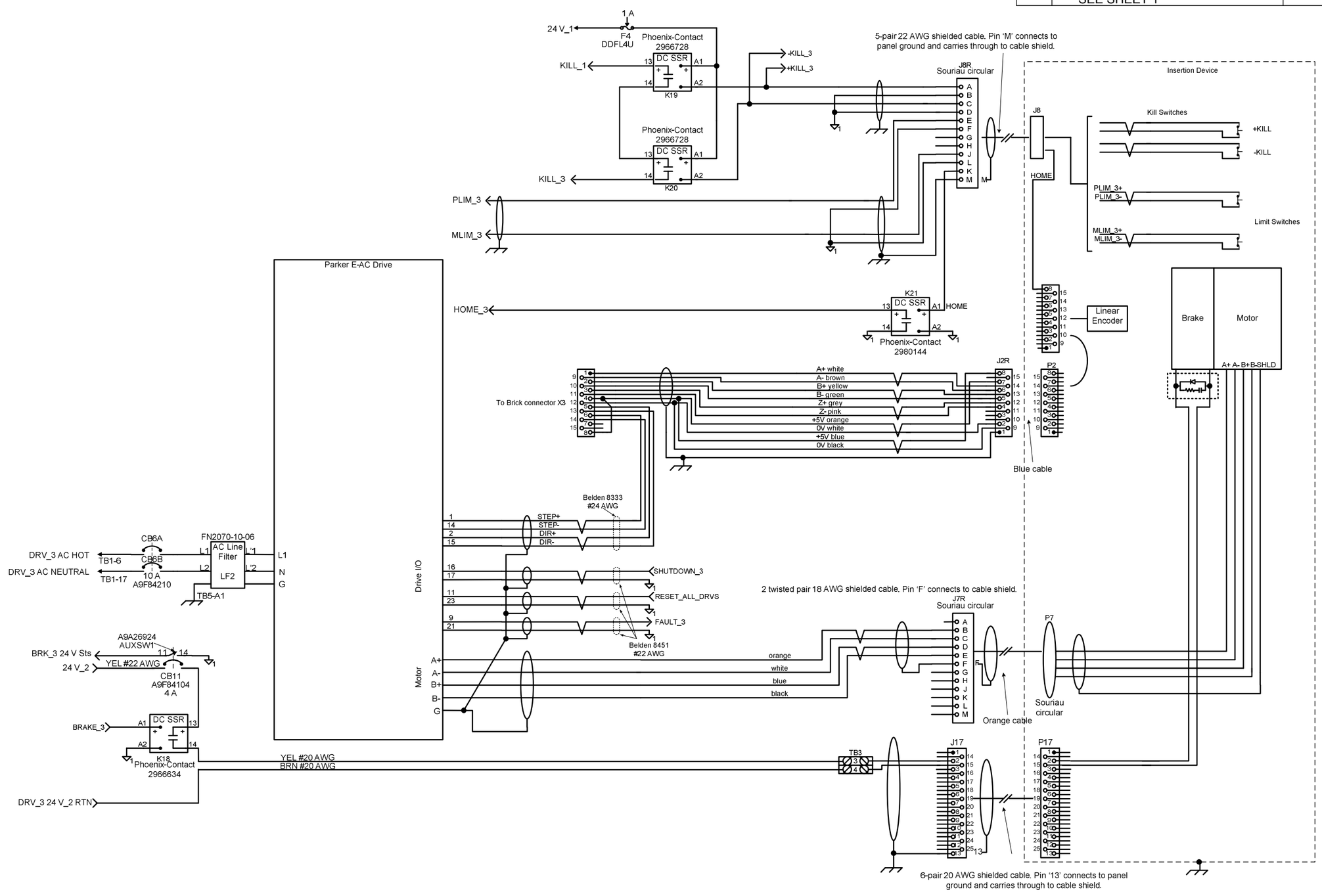

LT-EL-BL-ID	LT-EL-BL-ID-EPU-1070-90	
DRAWING DIRECTORY	DRAWING NUMBER	REV
COMPUTER REPRODUCIBLE	SCALE: N/A	SHEET 6 OF 10

LT-EL-BL-ID-EPU-1070-90

REV	DESCRIPTION	DATE	BY	CHECKED	APP
	SEE SHEET 1				

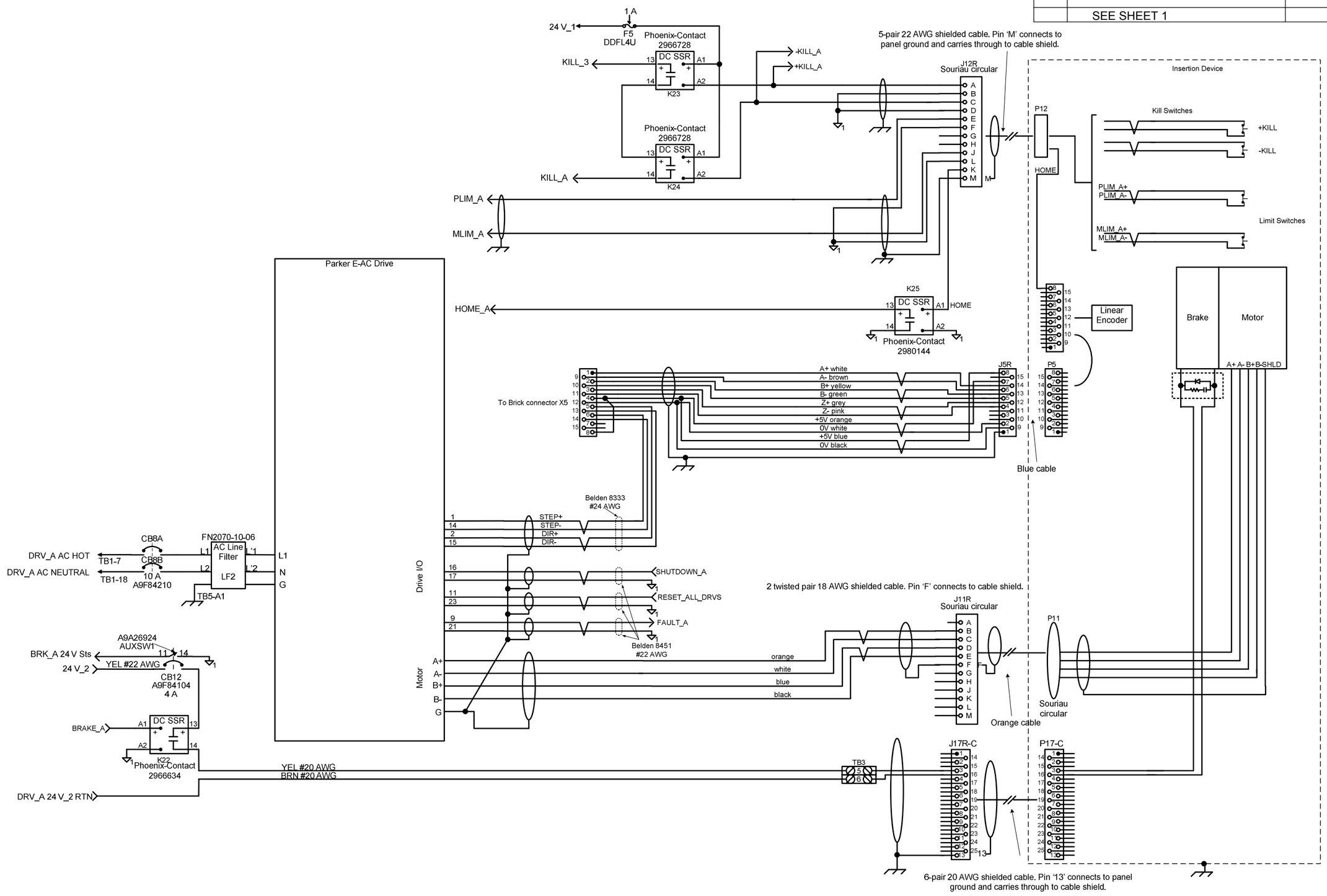

LT-EL-BL-ID	LT-EL-BL-ID-EPU-1070-90	
DRAWING DIRECTORY	DRAWING NUMBER	REV
COMPUTER REPRODUCIBLE	SCALE: N/A	SHEET 7 OF 10

LT-EL-BL-ID-EPU-1070-90

REV	DESCRIPTION	DATE	BY	CHECKED	APP
	SEE SHEET 1				

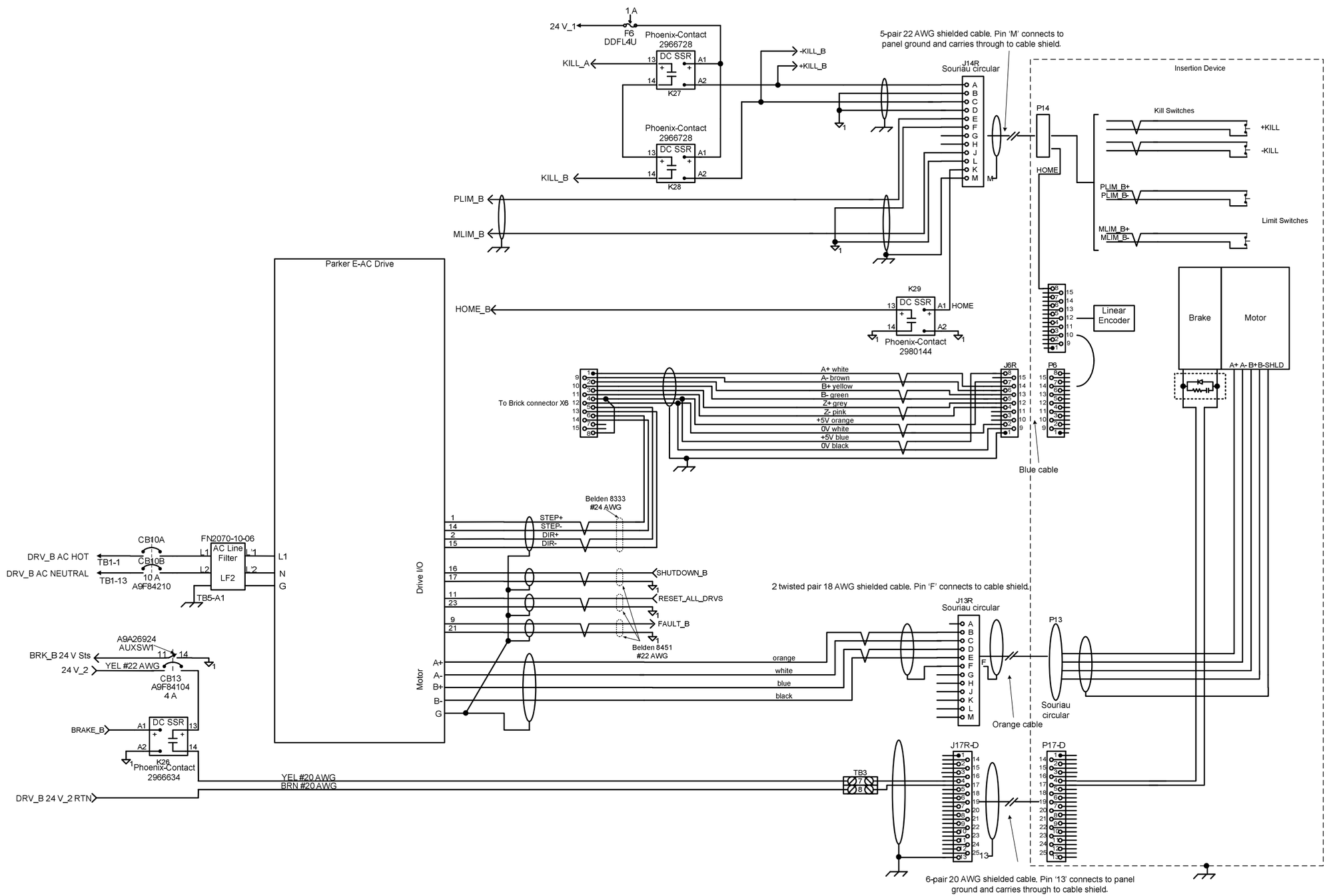

LT-EL-BL-ID	LT-EL-BL-ID-EPU-1070-90	
DRAWING DIRECTORY	DRAWING NUMBER	REV
COMPUTER REPRODUCIBLE	SCALE: N/A	SHEET 8 OF 10

LT-EL-BL-ID-EPU-1070-90

REV	DESCRIPTION	DATE	BY	CHECKED	APP
	SEE SHEET 1				

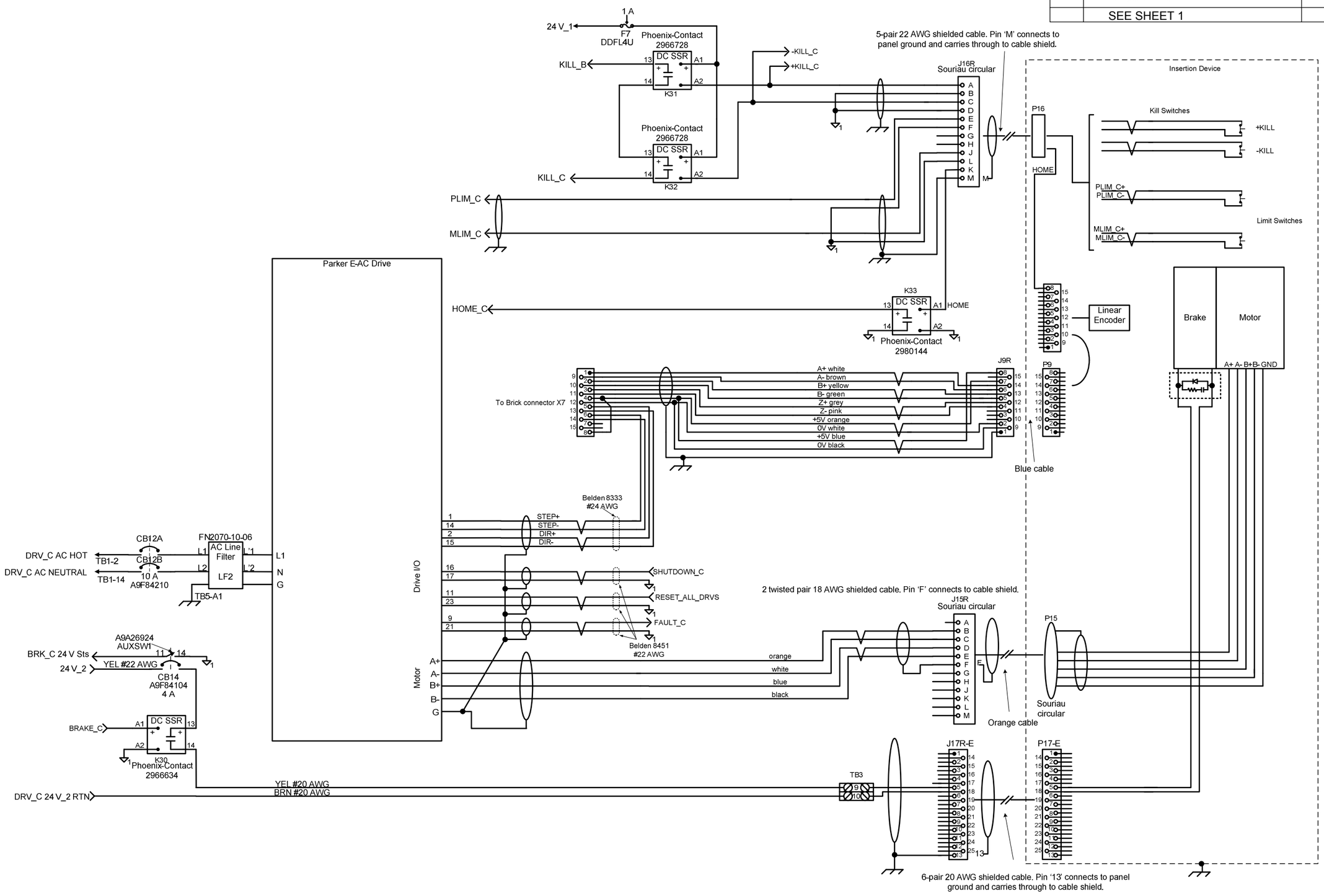

LT-EL-BL-ID	LT-EL-BL-ID-EPU-1070-90	
DRAWING DIRECTORY	DRAWING NUMBER	REV
COMPUTER REPRODUCIBLE	SCALE: N/A	SHEET 9 OF 10

LT-EL-BL-ID-EPU-1070-90

REV	DESCRIPTION	DATE	BY	CHECKED	APP
	SEE SHEET 1				

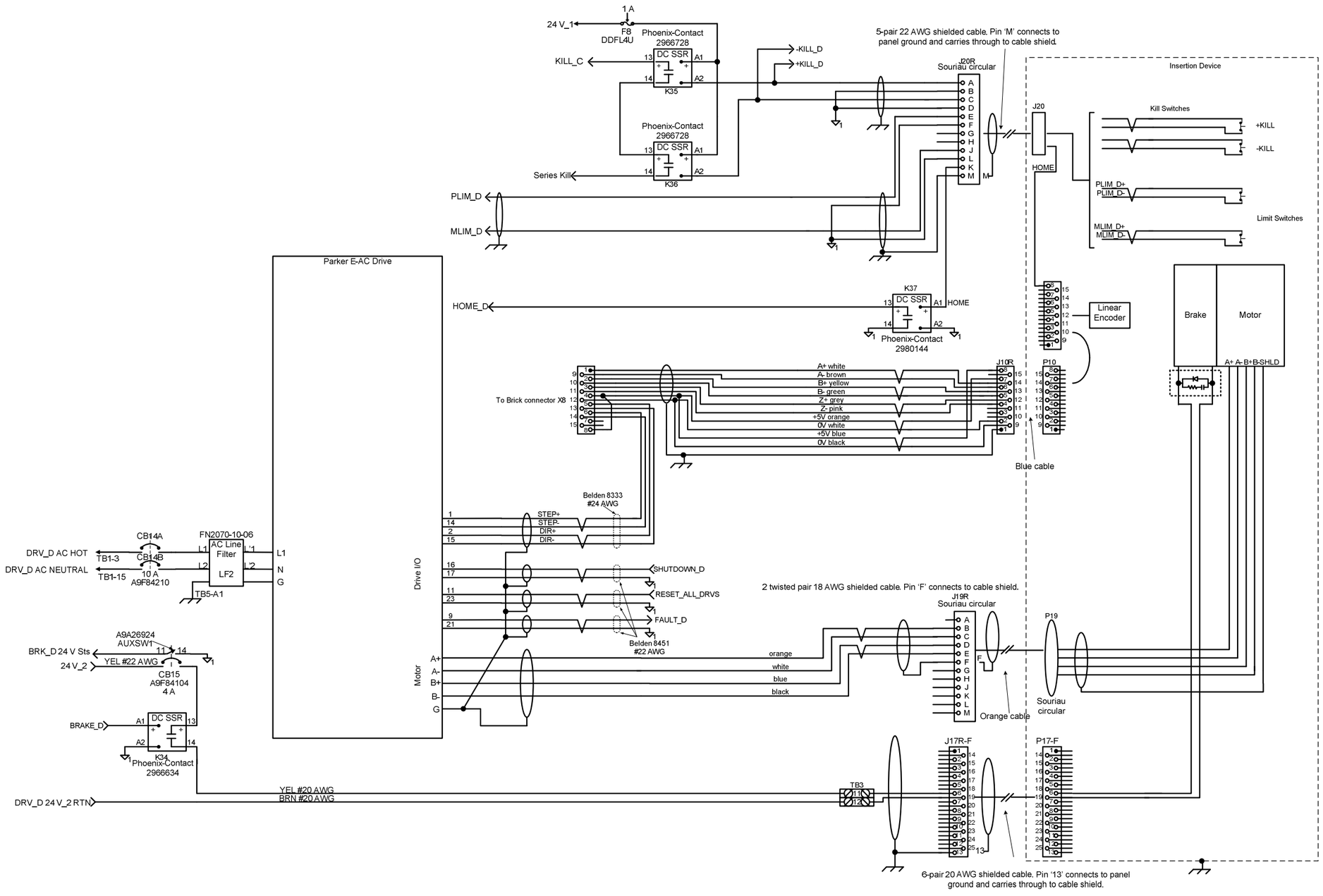

LT-EL-BL-ID	LT-EL-BL-ID-EPU-1070-90	
DRAWING DIRECTORY	DRAWING NUMBER	REV
COMPUTER REPRODUCIBLE	SCALE: N/A	SHEET 10 OF 10

LT-EL-BL-ID-EPU-1070-90

REV	DESCRIPTION	DATE	BY	CHECKED	APP
A	INITIAL RELEASE	09/11/2017	SEJ	JM	JR

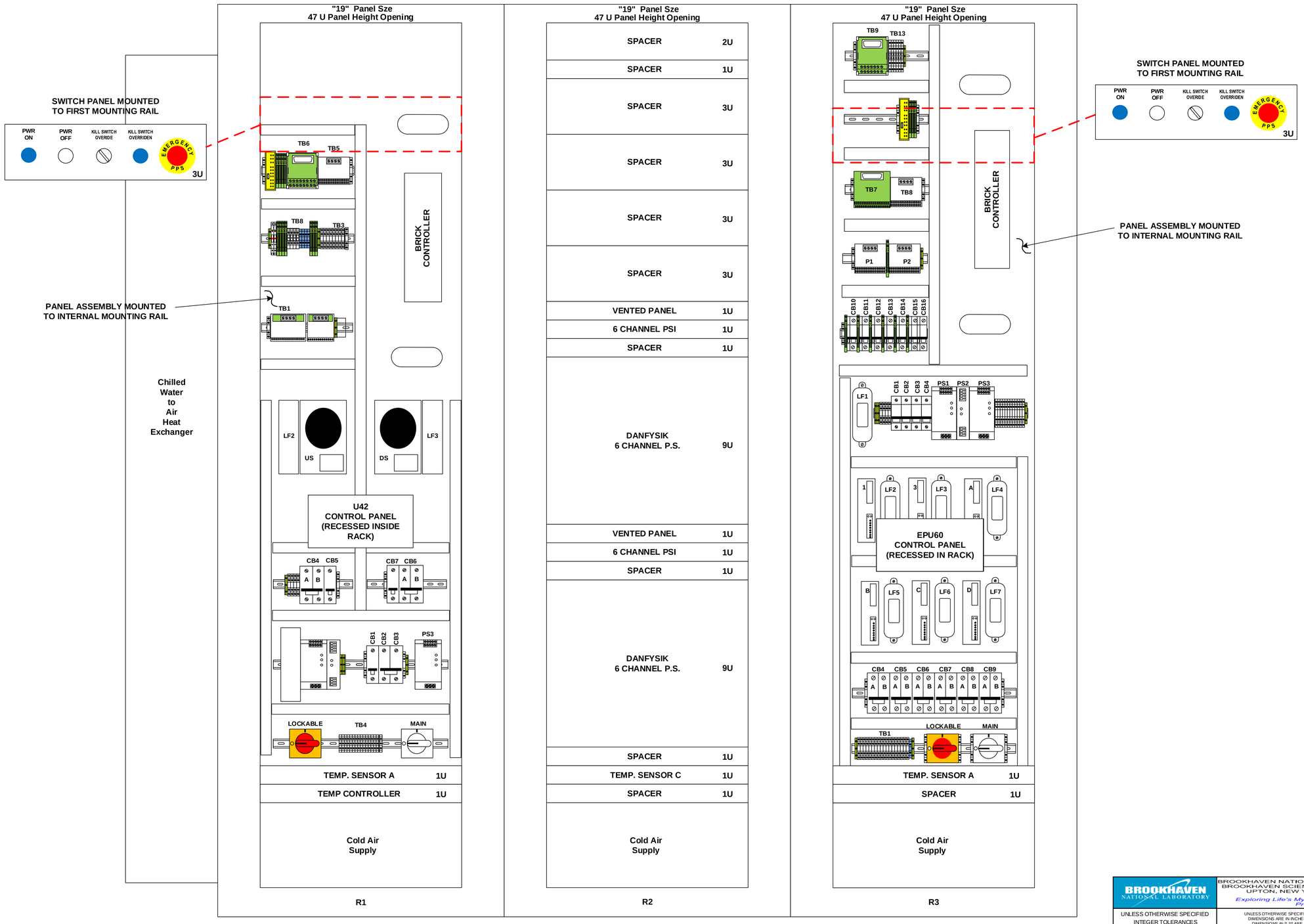

NOTES:
1- 1U = 1.75 inches

JOB NUMBER	USED ON DWG. NO.

BROOKHAVEN NATIONAL LABORATORY

BROOKHAVEN NATIONAL LABORATORY
BROOKHAVEN SCIENCE ASSOCIATES
UPTON, NEW YORK 11973
Exploring Life's Mysteries, Protecting its Future

NSLSII NATIONAL SYNCHROTRON LIGHT SOURCE II

UNLESS OTHERWISE SPECIFIED
INTEGER TOLERANCES ± .06
DECIMAL TOLERANCES
.X ± .030
.XX ± .015
.XXX ± .010
ANGULAR TOLERANCE ± 0.5°
UNSPECIFIED RADII .02 MAX
125 BREAK SHARP CORNERS AND EDGES
FINISH MAX .03 MIN .005

UNLESS OTHERWISE SPECIFIED DIMENSIONS ARE IN INCHES
DIMENSIONS IN [ ] ARE MILLIMETERS EQUIV. FOR REF. ONLY

ESH&Q RISK LEVEL A-2

INTERPRET DRAWING AS PER ANSI Y14.5 OR Y32.2

OUTSTANDING ECN'S

		DATE
DRWN BY	S. JARZABKOWSKI	09/11/2017
CHK BY	J.MALLEY	09/13/2017
ENG APP	J. RICCIADELLI	09/11/2017
SUPV APP	G. GANETIS	09/13/2017
QA APP	E.CHESWICK	09/12/2017
ESH APP	R. LEE	09/13/2017

CONFIGURATION DRAWING
PENTANT- 3 CELL 6
ID RACK GROUP F

LT-EL-SR-PS (DRAWING DIRECTORY) | LT-EL-SR-PS-RAK-1066-01 (DRAWING NUMBER) | A (REV)

COMPUTER REPRODUCABLE | SCALE: N/A | SHEET 1 OF 1

LT-EL-SR-PS-RAK-1066-01

SUGGESTED SOURCES OF SUPPLY		
CONTROL NO.	PART NO.	NAME AND ADDRESS
SR-ID-SST-EPU60-1000	00012155	ADC BY MEANS OF THE UNIVERSITY OF WISCONSIN

REVISION HISTORY					
REV	DESCRIPTION	DATE	DESIGNER	CHECKED BY	ENGINEER
A	REVISED PER ECO-004260	6/2016	FAUSSETE	CA/CS	KOSCIUK

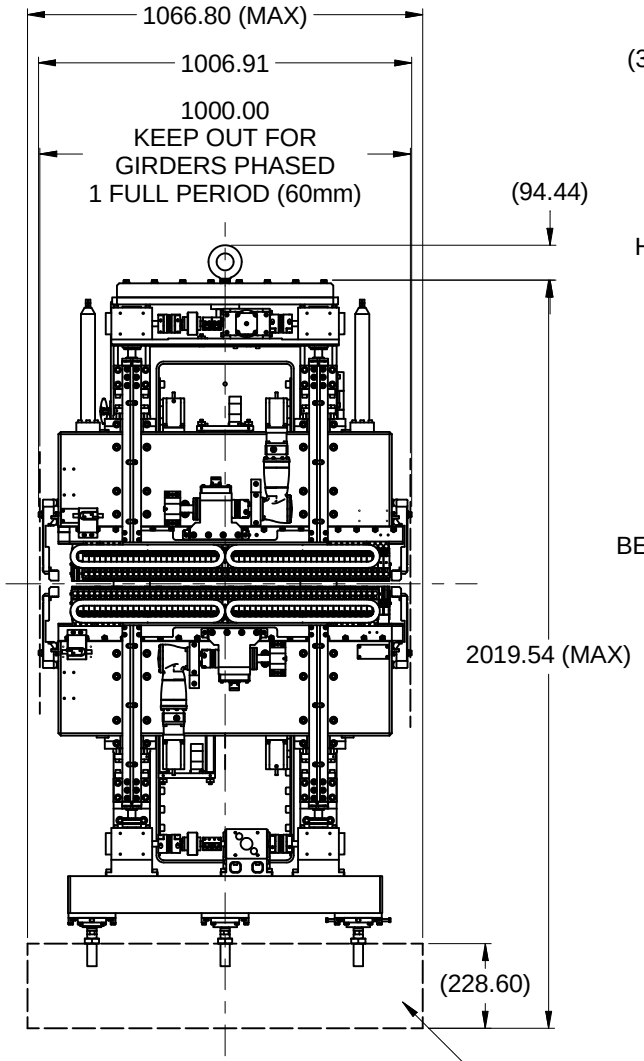

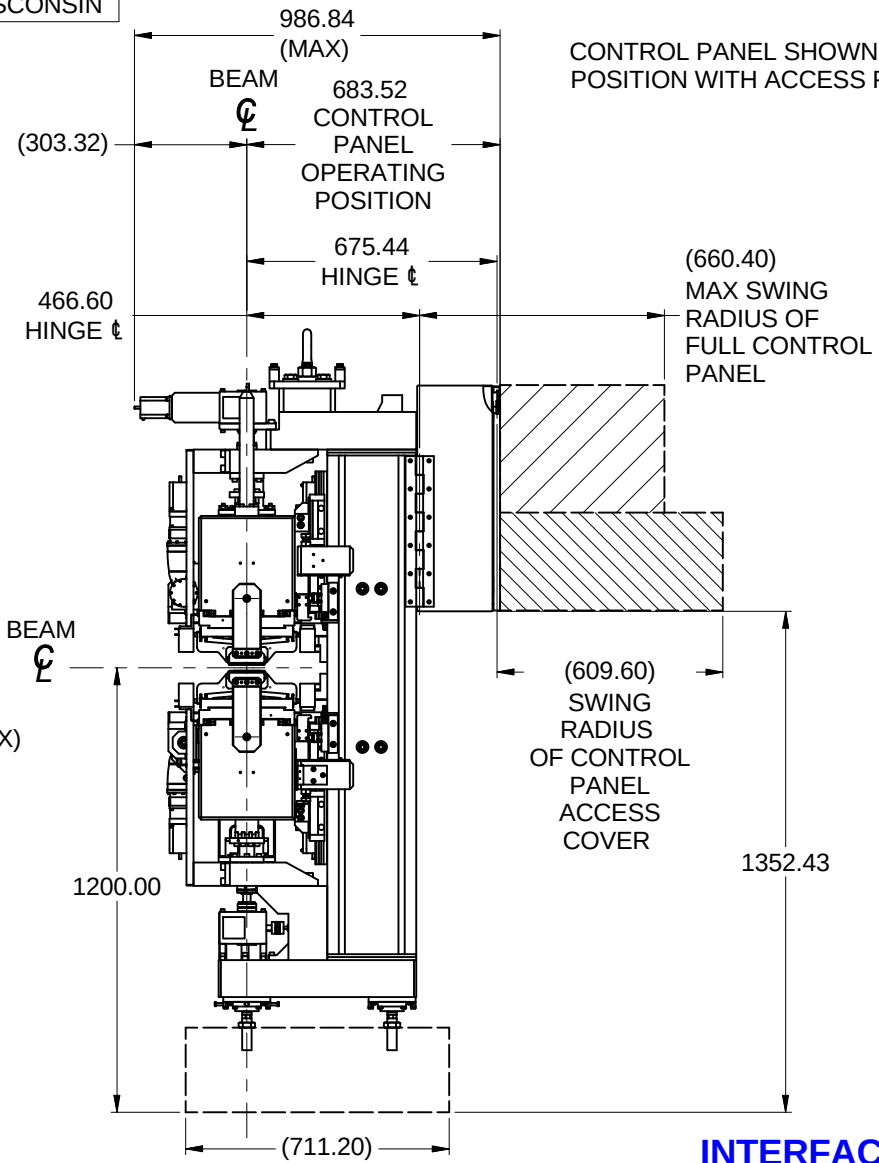

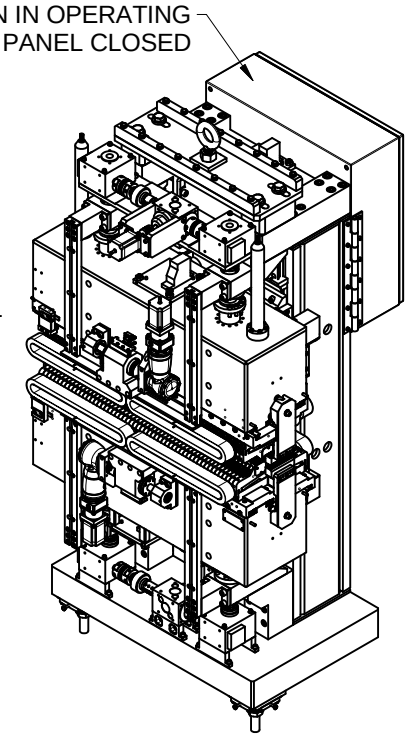

ISO VIEW
SCALE 1 : 11

BNL PLINTH ENVELOPE
(SR-ID-SST-SP-1001)

INTERFACE CONTROL DRAWING

NOTES:

1. REFER TO SPECIFICATION LT-C-ASD-SPC-ID-SST-001 FOR TECHNICAL AND PERFORMANCE REQUIREMENTS.
2. IDENTIFICATION OF THE SUGGESTED SOURCE(S) OF SUPPLY HEREON IS NOT TO BE CONSTRUED AS A GUARANTEE OF PRESENT OR CONTINUED AVAILABILITY AS A SOURCE OF SUPPLY FOR THE ITEM.

UNLESS OTHERWISE SPECIFIED
ALL DIMENSIONS ARE IN MILLIMETERS
DIMENSIONS IN BRACKETS [xx.xx] (WHERE PRESENT) ARE INCHES AND ARE FOR REFERENCE ONLY
INTERPRET DRAWING AS PER ASME Y14.5-1994 OR Y32.2-1975

DIMENSIONAL TOLERANCES	ANGULAR TOLERANCE
X. ± 1.500	± .5°
.X ± 0.750	
.XX ± 0.400	FINISH 3.2
.XXX ± 0.120	

BREAK EDGES & SHARP CORNERS 0.120 MIN. TO 0.750 MAX

BROOKHAVEN NATIONAL LABORATORY
BROOKHAVEN NATIONAL LABORATORY
BROOKHAVEN SCIENCE ASSOCIATES
UPTON, NEW YORK 11973
Exploring Life's Mysteries, Protecting its Future

NSLSII NATIONAL SYNCHROTRON LIGHT SOURCE II

DRAWN BY	FAUSSETE	5/2014
CHECKED BY	C. AMARITO	6/2016
VACUUM APPROVAL	N/A	N/A
ENGINEER APPROVAL	KOSCIUK	6/2016
SUPERVISOR APPROVAL	TANABE	6/2016
ES&H APPROVAL	ACKERMAN	6/2016
QA APPROVAL	CHESWICK	6/2016

STORAGE RING
INSERTION DEVICES, EPU60
ASSY, EPU60, SST

C (SHEET SIZE)	SR-ID-SST-EPU60-1000 (DRAWING/PART NUMBER)	A (REVISION)

NEXT ASSY:	-		
PROJECT:	THIRD ANGLE PROJECTION	SCALE: SEE DWG VIEW	WBS# 7.02.05.02.01
ESH&Q RISK LEVEL	A2	SHEET 1	OF 1

C:\Mech-Eng\LT\SR\ID\SST\EPU60\SR-ID-SST-EPU60-1000.idw

RELEASED + EFFECTIVE

USS9

1-23-09

Table of Contents:
SRC EPU Final Documentation

1. Operation/Maintenance Information
2. Spare Parts List
3. CAD Files and drawings
4. Bill of Materials
5. Fiducialization

EPU 60

Advanced Design Consulting USA, Inc.

Maintenance Manual

SRC EPU

EPU made by ADC for SRC

January 2009
Rev1

Advanced Design Consulting USA, Inc.
P.O. Box 187
126 Ridge Road
Lansing, NY, USA 14882
Telephone: (607) 533-3531
Facsimile: (607) 533-3618
Email: adc@adc9001.com
Website: www.adc9001.com

Contents

1 SAFETY INFORMATION 4

1.1 ELECTRICAL RISKS 4
1.2 MECHANICAL RISKS 4
1.3 HANDLING INFORMATION ..... **ERROR! BOOKMARK NOT DEFINED.**

2 INTRODUCTION ..... ERROR! BOOKMARK NOT DEFINED.

2.1 FUNCTION OF THIS MANUAL ..... **ERROR! BOOKMARK NOT DEFINED.**
2.2 DEVICE OVERVIEW ..... **ERROR! BOOKMARK NOT DEFINED.**
*2.2.1 Recommended Reading ..... **Error! Bookmark not defined.***
*2.2.2 Required Software ..... **Error! Bookmark not defined.***

3 ELECTRICAL SPECIFICATIONS ..... ERROR! BOOKMARK NOT DEFINED.

3.1 POWER SUPPLY REQUIREMENTS ..... **ERROR! BOOKMARK NOT DEFINED.**
3.2 MOTOR DRIVE ..... **ERROR! BOOKMARK NOT DEFINED.**

4 COMMUNICATION SPECIFICATIONS ..... ERROR! BOOKMARK NOT DEFINED.

5 ENVIRONMENTAL SPECIFICATIONS ..... ERROR! BOOKMARK NOT DEFINED.

6 WIRING THE CONTROLLER ..... ERROR! BOOKMARK NOT DEFINED.

6.1 CONCEPT ..... **ERROR! BOOKMARK NOT DEFINED.**

7 ESTABLISH COMMUNICATIONS ..... ERROR! BOOKMARK NOT DEFINED.

8 BACK PANEL ..... ERROR! BOOKMARK NOT DEFINED.

9 CASE LAYOUT ..... ERROR! BOOKMARK NOT DEFINED.

10 EXTERNAL WIRING TO SLIT ASSEMBLY ERROR! BOOKMARK NOT DEFINED.

11 SIMPLE RUNNING OF THE SL-100 ..... ERROR! BOOKMARK NOT DEFINED.

11.1 RUNNING WITH THE FRONT PANEL ..... **ERROR! BOOKMARK NOT DEFINED.**

12 PROGRAMMING THE SL-100 ..... ERROR! BOOKMARK NOT DEFINED.

12.1 PROGRAMMING OVERVIEW ..... **ERROR! BOOKMARK NOT DEFINED.**
12.2 SAMPLE IMS TERMINAL PROGRAM ..... **ERROR! BOOKMARK NOT DEFINED.**

13 ADDITIONAL FEATERS OF THE SL-100. ERROR! BOOKMARK NOT DEFINED.

13.1 5VDC/24VDC POWER PINS ..... **ERROR! BOOKMARK NOT DEFINED.**
13.2 MOTOR CONNECTORS ..... **ERROR! BOOKMARK NOT DEFINED.**
13.3 COVER REMOVAL ..... **ERROR! BOOKMARK NOT DEFINED.**

14 WARRANTY ..... ERROR! BOOKMARK NOT DEFINED.

1 GENERAL INFORMATION

1.1 Introduction

The following is a maintenance support manual and information source for the SRC EPU built by Advanced Design Consulting (ADC) in the year 2008.

1.2 Safety Warnings

The magnets used in this machine are extremely powerful! Only authorized, trained, personnel should be allowed to work on this machine. Damage can occur through mis-operation, improper maintenance, or careless neglect. Always treat these magnets with respect. Your appendages will thank you later.

The magnet material is Neodymium-Iron-Born (NdFeB) and can be chipped easily! Wrap tools with tape when used around these magnets.

1.3 Mechanical Risks

Minor pinch points exist at the extreme ends of travel between the hard stops on the fully open end to the magnets and beam pipe on the minimum gap.

The SRC EPU is an automatic machine and as such can be commanded remotely to move at any time! Exercise caution even while the machine is off.

Warning

Moving mechanical parts can catch clothing and body parts. Ensure all body parts and clothing are clear of the device before activating moving parts.

Only qualified personnel should attempt maintenance or adjustments to the device.

Only attempt adjustment of the device in ways instructed in this document. Any further modifications should first be approved by ADC to ensure overall system safety.

1.4 Power Voltages

The voltages and currents used by the EPU during normal operation are very high and only trained personnel will be allowed to work on them. Follow local Lock-Out, Tag-Out procedures.

The SRC EPU employs a power control circuit. Be aware that a voltage exists inside the control cabinet – ***even while the machine is off!***

1.5 Common Sense Safety

Normal maintenance presents no hazard as long as prudent safety precautions are observed and practiced. Some standard practices are listed below, however, do not limit yourself to this list.

1. Remove all rings and jewelry

2. Keep the work area neat and orderly

3. Do not distract operators or users

4. Never assume the power is off, verify with a meter

5. Observe all safety precautions, do not remove safety covers

6. Consider the consequences of any action, think ahead

1.6 Magnetic Fields

This EPU uses magnets and pole pieces that can produce .75 Tesla. This is an extremely powerful field. Magnetic tools can be ripped from your grip if they stray too close to these magnets. Worse, the tool can pinch your hand against the magnet and injury could be serious. Wrap tools with tape so they can be pulled away from the magnets if they get caught. Use nonmagnetic tools where ever possible.

Note that the magnet material is Neodymium-Iron-Boron (NdFeB) and is chipped very easily– these magnets and the field they produce can be damaged very easily!

Exercise extreme caution when working around these magnet assemblies!

People with medical implants such as pacemakers should stay well away from this machine!

2 SYSTEM DESCRIPTION

The purpose of the SRC EPU is to generate 11-250 eV photons from the electron beam in SRC's 1GeV storage ring, Aladdin. This is done by passing the beam through a set of powerful magnet arrays. These magnets are mounted to two girders, one above the other, with the magnets facing each other.

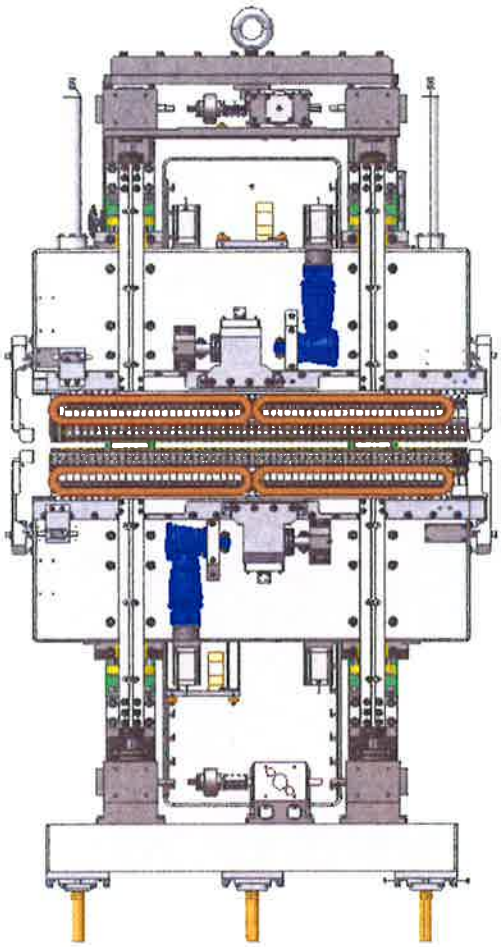

Figure 1 Front View of EPU Model

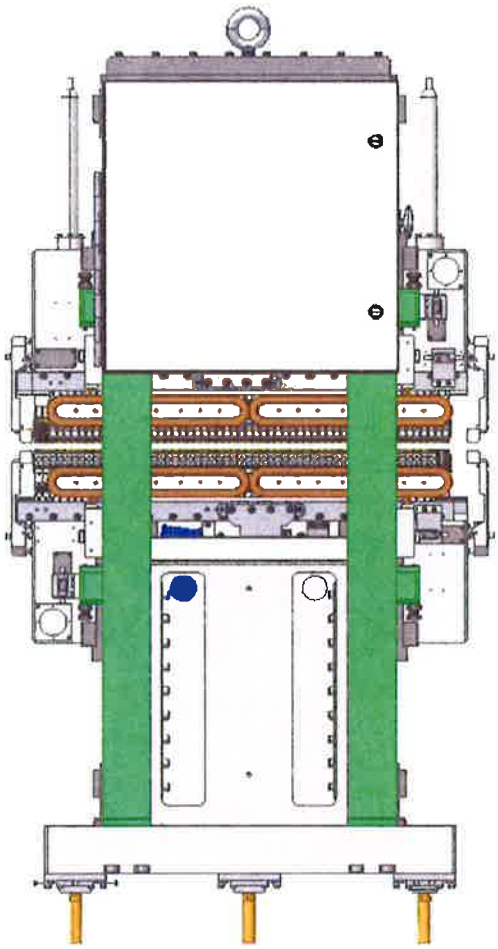

Figure 2 Back View of EPU Model

2.1 Mechanical

The gap is controlled by two ball screws on each girder. A single stepper motor drives the ball screws on each girder. Rotating the ball screws in one direction opens the girders and magnetic gap while rotating the ball screws in the other direction closes the gap. The gap ball screws have a 5 mm lead. With a 60:1 gearbox ratio, the gap changes .167 mm per rotation of the motor (.0833 mm movement of each girder). Safe practice dictates that you always block up the girders before disconnecting the motor and brakes.

Gap position is measured with a single absolute linear encoder mounted in reference to the frame. The motor drives each girder's two ball screws thru three right angle gear boxes. One revolution of the motor produces 83.3 microns of motion at the girder, for a total of 167 microns gap change. The right angle gearboxes are mounted to a strong-back frame which is mounted to a base that is kinematically supported.

Electro-mechanical brakes are provided on each gear box. These are applied with power off in a fail-safe mode. Under software control the brakes should be applied anytime the motor is off or disabled and not applied when the motor is on. In normal operation the brakes are always off and the motor holds the position.

2.1.1 Mechanical Specifications

Weight	3450 pounds (estimated)
Gap Normal Travel	15.0-110 mm
Gap Limit Range	14.0-115 mm (adjustable)
Gap Hard Stop Range	13.0-116.5 mm (adjustable)
Gap Max Speed	2 mm/sec
Gap Gear Ratio	60:1
Gap Screw Lead	5 mm/rev
Pole Period	60.125 mm
Phase Normal Travel	+/- 15 mm
Phase Limit Range	60 mm
Phase Hard Stop Range	62.5 mm
Phase Screw Lead	5 mm
Phase Gear Ratio	12:1
Phase 30 mm Move Time	11.5 sec
Taper Control	Manual Harmonic Adjuster

Height (from EPU base to center of lifting eye) 1758 mm

2.2 Lifting Point

Refer to the following photo for the recommended lifting point on the EPU. The EPU can be safely lifted from the single lifting eye on top of the machine. The height of the machine measured from the EPU base to the center of the lifting eye is 1758 mm. To lift the EPU, ADC used a forklift with a specially adapted crane.

Figure 3 Lifting Point 'in action' during a lift test

2.3 Hard Stop Adjustment

There are hard stops that prevent the girders from opening or closing too far. Four hard stops are located on the top and bottom (total of eight) to prevent opening or closing too far. These are set at the following positions listed below. The phase hard stops are not adjustable.

	Inner Limit	Outer Limit	Inner Hard Stop	Outer Hard Stop
Upper Gird	14.557	110.488	13.435	116.372
Lower Gird	14.416	110.344	13.011	116.256
	Upstream Limit	**DwnStream Limit**	**Upstream Hard Stop**	**DwnStream Hard Stop**
Phase A	-30.548	29.970	-31.015	31.411
Phase B	-30.662	30.011	-31.860	30.138
Phase C	-29.201	31.440	-29.259	32.204
Phase D	-29.387	31.294	-29.715	32.360

2.4 SET GAP HARD STOPS

Position the gap at 110 mm do not defeat the limits. Using a piece of 3.125 mm shim stock, check the setting by running the shim stock between the top of the hard stop bolt and the hard stop contact point. Adjust as necessary by loosening the jam nut and turning the hard stop bolt. When the jam nut is tight the shim stock should have a slight drag but not too loose or so tight it is pinned by the bolt.

2.5 SET INNER HARD STOPS

Position the gap at 14.0 mm, do not defeat the limits. Using a piece of .25 mm shim stock, check the setting of the front hard stops by running the shim stock between the two sets of two bolts. Adjust as necessary by loosening the jam nut and turning the hard stop bolt. When the jam nut is tight the shim stock should have a slight drag but not too loose or so tight it is pinned by the bolt.

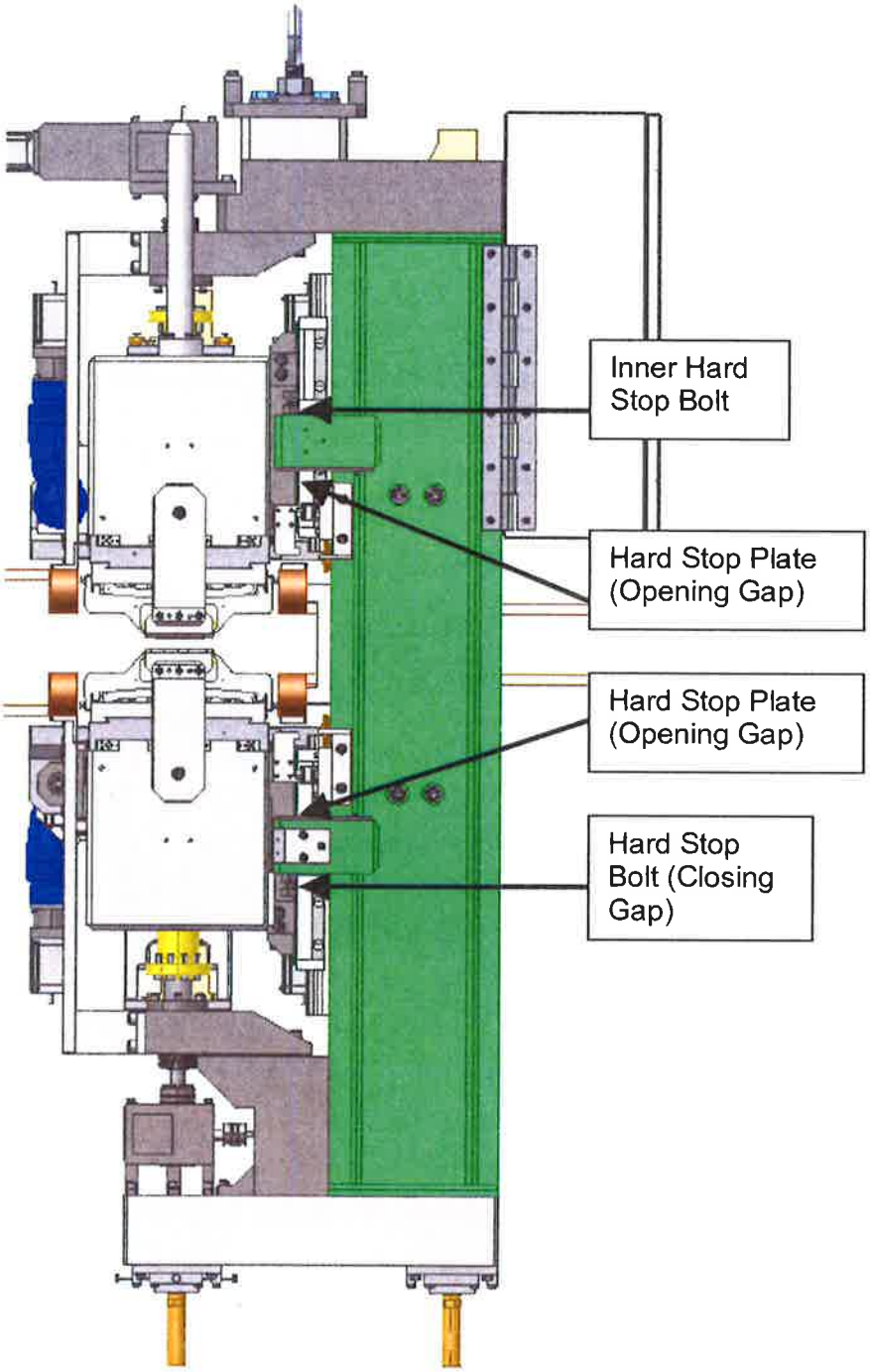

Figure 4: Opening and Closing Gap Hard Stops

2.6 Fiducialization

See the report on fiducialization called SRC EPU Fiducialization Report.doc provided by ADC. This contains the details regarding fiducialization.

3 MAGNET MECHANICAL SHIMMING OPERATION

3.1 Overview

This section provides instruction on how to shim and check the preload bolts on EPU magnet assemblies for ADC ID units.

3.2 Description

The ADC EPU magnet assembly consists of 4 parts, the magnet holder to which the magnet is attached, a sliding wedge for adjusting the height of the magnet, and a dovetail base unit to which the first two assemblies are attached - there may be 5, 7, or 9, magnets on a single base assembly - and the sub girders which are attached to the main girders using a V shaped bearing rail. See Figure 5 below.

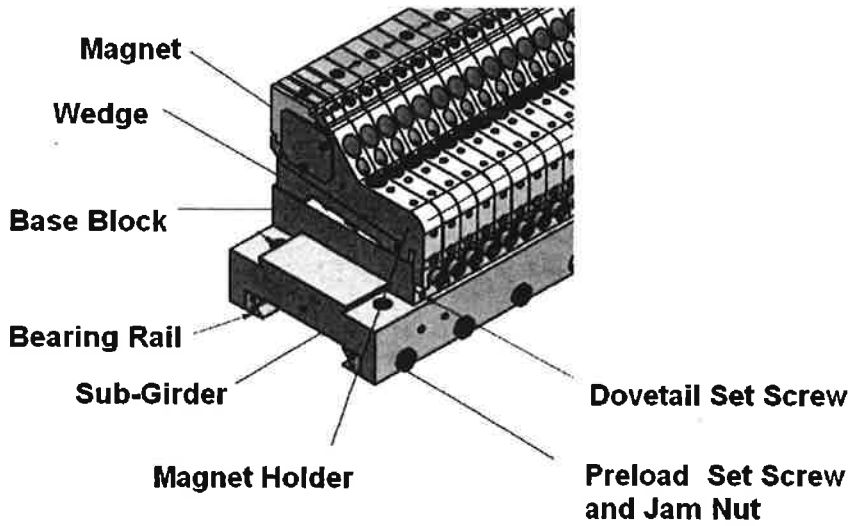

Figure 5 – ADC Magnet Assembly

3.3 Sub-Girders

The sub-girders are held to the main girders with a V shaped bearing rail. There are set screws backed by a jam nut, items 8 and 9 in figure 2 below, to hold a preload on these bearings. The preload torque on the set screw is 9 N-m (80 in-lbs). The jam nut is only snug to prevent pulling back on the preload screw but yet keep the preloaded set screw in place. The ID unit must be in the Circular mode to minimize the transverse magnetic load and at maximum gap to minimize the magnetic vertical load. The longitudinal load is maximum at maximum gap but this should not be a concern for this setting. The circular mode is at +/- .1621 phase or 9.726 mm. There are 2 circular modes, 1) CP+ has A and D at .1621 and B and C are at -.1621 phase, 2) CP- has A and D at -.1621 and B and C at .1621 phase.

Loosen the jam nut and set the torque on the set screw using a torque wrench. Re-snug the jam nut.

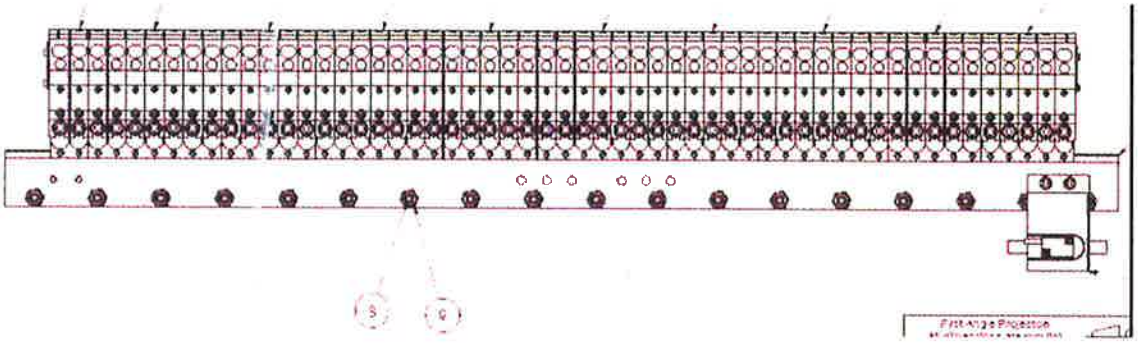

Figure 6 – Bearing Rail Preload set Screws

3.4 Dovetail Set Screw

The dovetail of the base assembly mates with the dovetail of the subgirder. Brass keepers (one for each magnet, backed up with M5 set screws) hold the base assembly to the subgirder. See item 8 in Figure 3 below. These are usually torque'd as tight as possible without rounding the set screw socket, usually about 30 in-lbs.

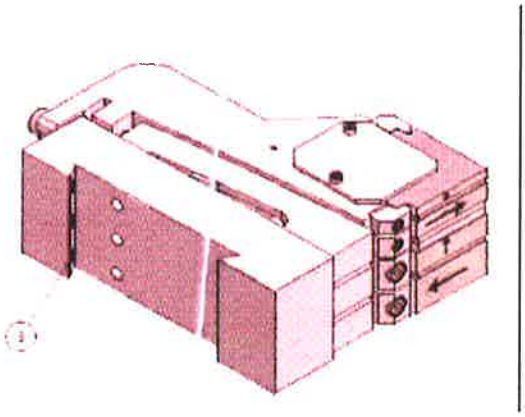

Figure 7 - Dovetail

3.5 Horizontal Shimming

Usually only the poles (magnets with vertical fields) are shimmed. Shimming moves the magnet block toward, or away, from the centerline of the magnet array. Increasing shims moves the magnet away from the center and decreasing shims moves the magnet toward the center. Movement is the same for front and back, top and bottom arrays. A special tool (see figure 6 and 7) is required to pull the magnet holder back when replacing a shim. Refer to figure 4 and 5 below and use the following procedure to change a shim. Note: this procedure is the same for vertical or horizontal blocks.

Remember, these magnets are very powerful and tools will be sucked out of your hands. Wrap all tools with tape to prevent damage to the magnets. Be careful of your fingers, keep a good grip on all tools near the magnets.

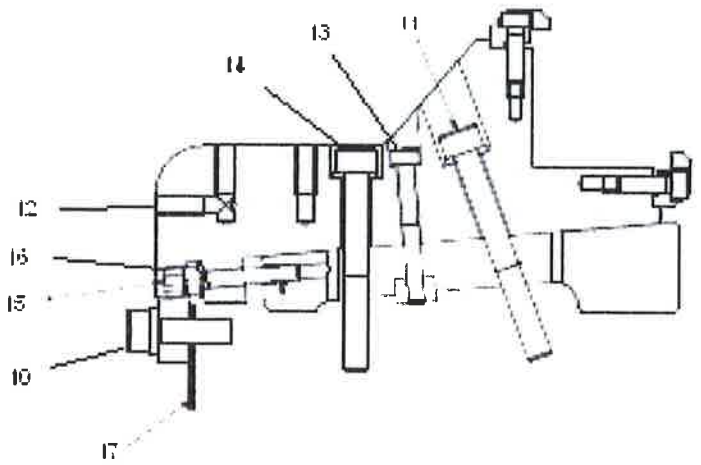

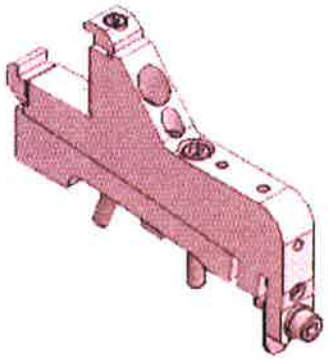

Figure 8 – Side View of Magnet Holder

Figure 9 – 3D view of magnet Holder

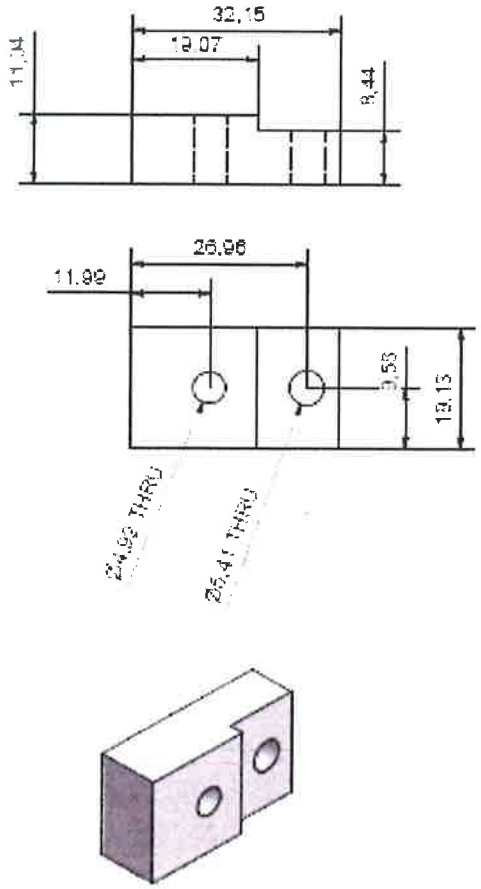

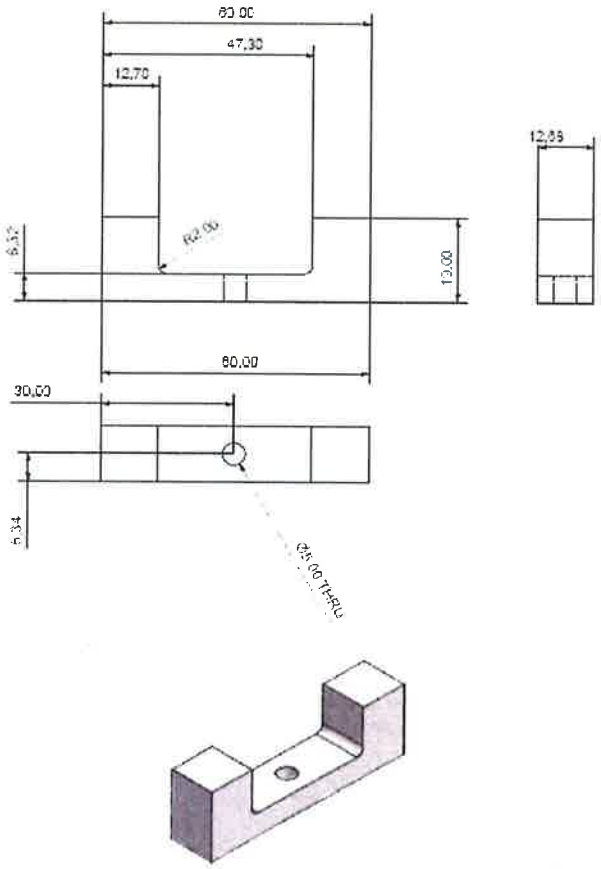

Figure 10 – Pull Back Tool

Figure 11 – Pull Back Tool

3.6 Shim Procedure

1) Identify the pole to be shimmed and mark it if it is not already marked.
2) If using the pull back tool in figure 6, mount the tool to the adjacent magnet using an M5 screw into the threaded hole - item 12 in figure 4
    a. Mount an M5 screw into the holder to be pulled back – item 12 in figure 4 – Do not tighten the pull back screw yet.
3) If using the pull back tool in figure 7, thread an M5 into item 12 in figure 4 – Do not tighten the pull back screw yet.
4) Loosen the horizontal shim screw by several turns – item 10 in figure 4
5) Loosen top screw by 1 turn – item 11 in figure 4
6) Loosen top screw by 1 turn – item 14 in figure 4
7) Pull the holder back by tightening the tool screw in the holder thread – item 12 in figure 4.
8) Be ready to catch the shims - item 17 in figure 4 - as they will fall out of the bottom arrays
    a. Keep the floor clean so you can gather the shims if they do fall out
9) Change the shim stack to the new requirement.
10) Insert the new shims and hold them there while releasing the tool screw.
    a. The holder will typically draw back into place with magnetic force
11) Remove the drawback tool
12) Holding the shims in place tighten the horizontal bolt – item 10 in figure 4
13) Tighten the angled top bolt – item 11 in figure 4.
14) Tighten the vertical top bolt – item 14 in figure 4.
15) Check the tightness of the horizontal bolt – item 10 in figure 4
16) Check the tightness of the angled top bolt – item 11 in figure 4.
17) Check the tightness of the vertical top bolt - item 14 in figure 4.

3.7 Vertical Shimming

Vertical shimming is a poor label because no shims are actually used. The block is raised and lowered by pushing or pulling the wedge with a screw – item 15 in figure 4. The push or pull is performed by turning the wedge screw – item 15 in figure 4. Turning this bolt clockwise draws the wedge away from the centerline causing the block to move up. Turing this bolt counter clockwise pushes the wedge toward the centerline lowering the block. Use the following procedure to raise and lower both vertical and horizontal blocks. Pay particular attention to the sequence.

3.8 Raise/Lower Procedure

1) No special tools are required for this procedure
2) Loosen the horizontal shim bolt – item 10 in figure 4
3) Loosen the top angled bolt – item 11 in figure 4
4) Loosen the top vertical bolt – item 14 in figure 4
5) Loosen the set screw holding the wedge adjustment bolt by several turns – item 16 in figure 4
6) Loosen the wedge holder bolt – item 13 in figure 4
7) Insert an Allen wrench (smaller than that used in step 5 above) into the wedge adjustment screw – item 15 in figure 4.
8) Rotate the Allen wrench the desired amount CW or CCW.
    a. One full turn equals 1 mil of vertical travel
9) Tighten the holding screw for the wedge – item 13 in figure 4
10) Tighten the set screw holding the wedge adjuster bolt – item 16 in figure 4
11) Tighten the horizontal shim bolt – item 10 in figure 4.
12) Tighten the angled top bolt – item 11 in figure 4.
13) Tighten the vertical top bolt – item 14 in figure 4.
14) Check the tightness of the horizontal bolt – item 10 in figure 4
15) Check the tightness of the angled top bolt – item 11 in figure 4.
16) Check the tightness of the vertical top bolt - item 14 in figure 4.

4 PREVENTATIVE MAINTENANCE

4.1 Magnet Assembly Bolt Tightening PM Procedure

On an annual basis the bolts on the magnet assemblies should be tightened. These can work loose due to multiple openings and closures of the gap. Use extreme caution when performing this procedure as these magnets are extremely powerful. Wrap tools with many layers of tape (like a handle) to make it easier to remove if they are caught by the magnets.

Open the gap to the maximum of 110 mm. Tighten the bolts on the top of the magnet assembly and at the shim on the block.

4.2 Maintenance Schedule

The following outlines the maintenance requirements for the proper up-keep of the EPU ID Unit built by ADC. The time periods repeat.

4.2.1 6 Month Intervals

1) The ball screw shafts should be lubricated by wiping or spraying on a light machine oil such as mobil DTE24.

2) The roller rail runner blocks are lubricated with KP 2 K (grease of NLGI class 2 to DIN 51 818), approx. 1 cm^3 every 6 months.

3) The rails should be lubricated by wiping or spraying on a light machine oil such as mobil DTE24.

4) Clean the dust off the (4) optical limit switches and encoder glass by blowing them off with clean, dry, canned air such as used for photography.

4.2.2 1 Year Intervals

1) Tighten all magnet hold-down bolts. See the previous section on bolt tightening.

4.2.3 5 Year Intervals

1) Remove the grease from ball screw jack gearboxes, clean the gearboxes and replace the grease. Use Kluber LA02 grease. Take care to avoid getting lubricant on the brakes. ??? Ask Dave

5 WARRANTY

ADVANCED DESIGN CONSULTING USA, INC.'s ("ADC's") goal is to provide top-quality, zero-defect equipment to its customers. This product is therefore warranted to be without defects in workmanship or materials under normal and proper use for a period of one year from the date of delivery to the original purchaser ("Purchaser"). Our obligation under this warranty will be limited to the repair or exchange of the product which may thus prove defective under normal and proper use by the Purchaser, and which our examination will disclose to our satisfaction to be defective. The term "normal and proper use," as used in this warranty, will be deemed to mean use only for the purpose for which the product is intended. The material defect warranty will not apply to any material supplied to ADC by the Purchaser. Purchased parts such as bearings, switches, and sensors etc, are warranted by ADC only to the extent and terms of the original manufacturer's warranty.

This warranty will not apply to this product or any part thereof which has been subject to accident, negligence, modification, alteration, abuse, misuse, inadequate or improper maintenance, extreme conditions, and placement in an unsuitable physical or operating environment or has been caused to fail by a product not provided by ADC. Likewise, this warranty does not apply if the product is repaired or serviced by anyone other than ADC or an ADC factory-trained technician, or if operated in a manner contrary to the instructions which accompany the product.

This warranty does not include defects as a result of, but not limited to, errors in design, test data, diagnostics, application specifications, lack of design margin, errors in specifications, or errors in bills of materials as provided or directed by Purchaser.

1. In the event of the product not conforming to the above warranty, ADC will, at its option, either repair or replace the product free of charge to the Purchaser, provided that:
   a) As a condition to obtaining warranty services, Purchaser must either:
      i) Notify ADC in writing within ninety days after discovery of the defect; or
      ii) At its own expense, return the defective product to ADC's facility in Lansing, NY no later than ten days following the last day of the warranty period.
   b) All products require a Return Authorization from ADC prior to their return, which will be issued within five days from receipt of Purchaser's request. Purchaser will advise ADC prior to returning any product for repair.
   c) The warranty is in force. The warranty is void if your ADC product:
      i) Has not been operated in accordance with all procedures described in the operating instructions;
      ii) Has been serviced, adapted or modified without written approval by ADC; or
      iii) Has been improperly installed, used, maintained or otherwise damaged (including without limitation any damage by fire, smoke or water).
2. There is no warranty coverage for any of the following:
   a) Costs of removing or reinstalling the product when submitted for warranty service;
   b) Any non-performance of the product due to inadequate or improper maintenance;
   c) Routine maintenance, periodic adjustment or performance testing of the product as recommended in the operating instructions; or
   d) Normal wear and tear on the product.
3. THIS LIMITED WARRANTY WILL CONSTITUTE THE SOLE AND EXCLUSIVE WARRANTY FOR YOUR PRODUCT. ADC DISCLAIMS ANY OTHER WARRANTIES EXPRESSED, IMPLIED OR STATUTORY, INCLUDING WITHOUT LIMITATION ANY WARRANTY OF MERCHANTABILITY OR FITNESS FOR ANY PARTICULAR PURPOSE.
4. This limited warranty contains the complete obligations of ADC to the Purchaser in connection with the product, and it will supersede all previous oral or written statements or agreements concerning such obligations. This warranty may only be amended in writing signed by an authorized officer of ADC. The above warranty periods will not be extended by the repair or replacement of product.
5. After expiration of the warranty herein, ADC may continue to offer repair services to keep your equipment operational. Please inquire for the prevailing charges for such service.

Boxed Items pack-list/Spare Parts list

Box 1	Magnets
Item	**QTY**
VE0106	1 pc
VE0105	1 pc
VE0006	1 pc
VE0005	1 pc
V0049	1 pc
V1046	1 pc
V0016	1 pc
V0036	1 pc
V0031	1 pc
H1013	1 pc

Box 2	Magnets
Item	**QTY**
H1E003	1 pc
H2E0004	1 pc
H1E0105	1 pc
H1E0103	1 pc
H1E0005	1 pc
H2E0105	1 pc
H2E0101	1 pc
H2E0106	1 pc

Box 3	Magnets
Item	**QTY**
H0050	1 pc
H0046	1 pc
H0024	1 pc
H0019	1 pc
V0023	1 pc
H0010	1 pc
H1061	1 pc
H0058	1 pc
V0061	1 pc

Box 4	Magnet Holders
Item	**QTY**
Controls Cabinet Latch	1 assy
#8740 Mag Holder Part	1 bag
#6739 Magnet Clips	1 bag
#12295 Mag Holder Adjustment Wedge	10 pcs
Mag Holder, 1-hole	6 pcs
Mag Holder, 2-hole	2 pcs
#12323 SRC End Spacer 3	3 pcs

Box 5	Magnet Holders
Item	**QTY**
Feet	1 Boxfull

Box 6	SRC Tools
Item	**QTY**
Talyvel 4	1 Container
SRC Stick Micrometers	1 Container
Heidenhain Adjustment Tool	1 Container

Box 7	Magnets
Item	**QTY**
V1045	1 pc
V1013	1 pc
V1053	1 pc
V1043	1 pc

Box 8	Spare Parts
Item	**QTY**
#8821 6mm Magic Finger Plug	1 bag
Magic finger Magnets	1 bag
M4x8 Set Screws	1 bag
High Radiation Cable Clamps	1 bag
0.005" Shims	1 bag
0.010" Shims	1 bag
0.007" Shims	1 bag
0.003" Shims	1 bag
0.0204" Shims	1 bag
Optical Targets	2 pcs
Slip Clutches	2 Assys
#12622 10/24 x 3/4 Socket Cap Screws	1 Pack
#12532 1/4 x 1-1/2 Stainless Dowel Pin	1 Pack
#6056 M5x10 SHCS	1 Pack

Box 9	Encoder/Limits
Item	**QTY**
Spare Limit Switch Boards	3 Bags
Encoder Parts	Some
Encoder Documentation	Some

Box 10	Magnet Assys
Item	**QTY**
Magnets Mounted in Holders	1 Assy

In it's original Box	APC Backup
Item	**QTY**
APC Battery Back-up RS Series	1 Box

C-C (1 : 1)

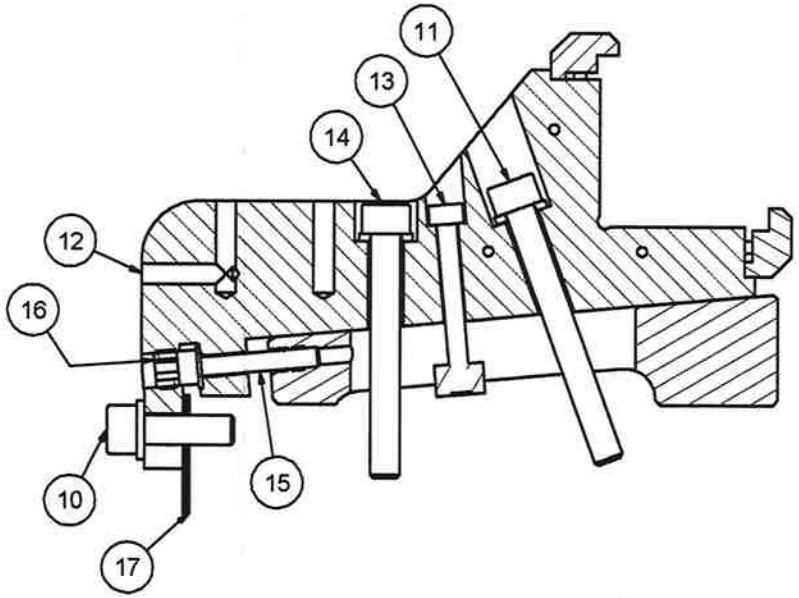

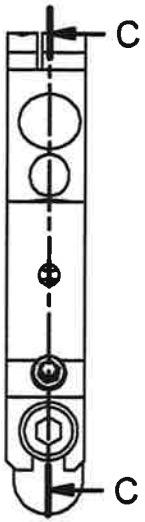

Designed by	Checked by	Approved by - date		Date	
alamb				1/8/2009	

	Edition	Sheet
00012328_Special		1 / 1

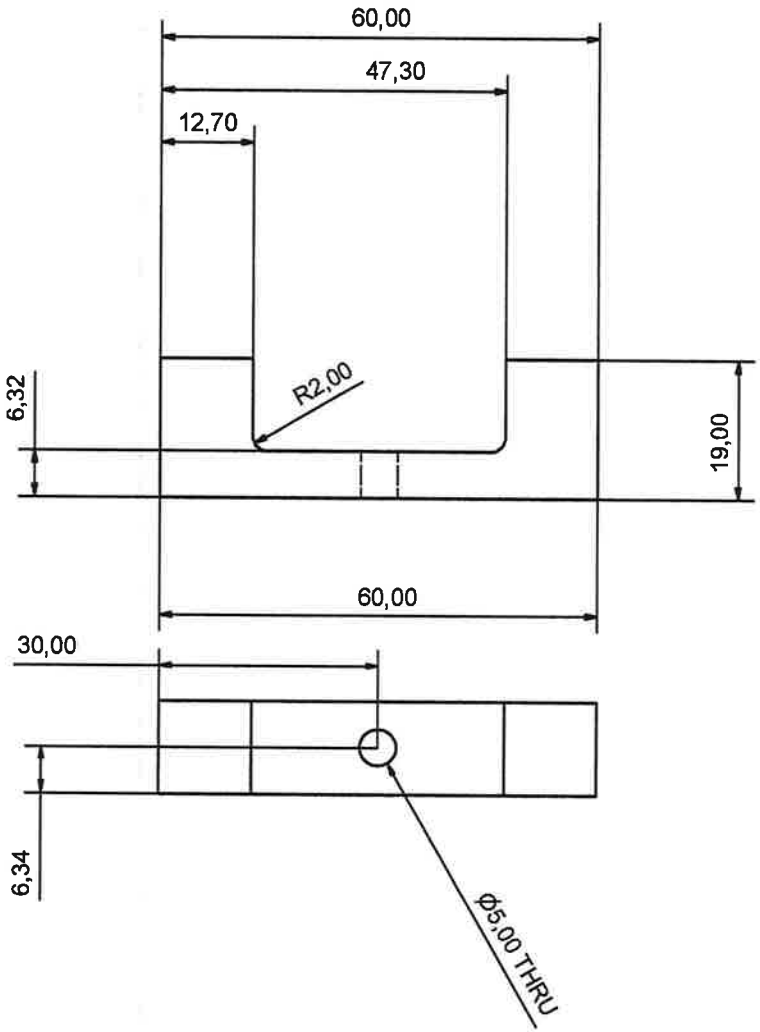

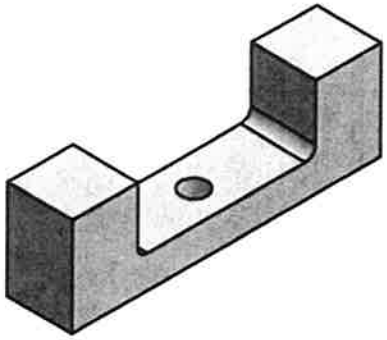

Designed by	Checked by	Approved by - date		Date
alamb				1/5/2009

Magnet Holder Shim Tool 1

	Edition	Sheet
N/A	1	1 / 1

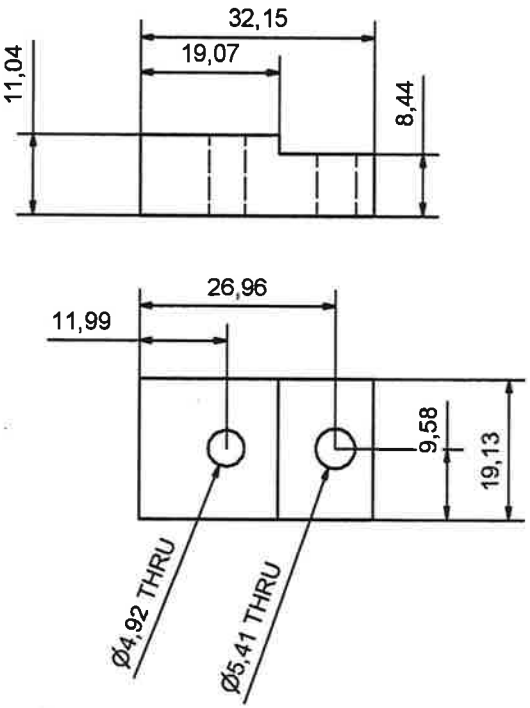

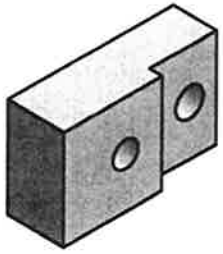

Designed by	Checked by	Approved by - date		Date
alamb				1/5/2009

Magnet Holder Shim Tool 2

	Edition	Sheet
N/A	1	1 / 1

ADC JOB Bill of Material

PROJECT NUMBER	11-778
SRC EPU 60.0	00012155
PROJECT ENGINEER	A Lyndaker

NUMBER OF ASSEMBLIES:	1
REVISION:	2
REV. DATE:	8/12/2008

DWG ITEM	DWG QTY	JOB QTY	QTY ON HAND	U of M	ASSY #	PART #	REV #	DESCRIPTION	MATERIAL	MOD	VENDOR & VENDOR PART NUMBER	RELEASE DATE	PURCH PART PO#	ORDER DATE & INITIALS	STATUS LAST CHECKED DATE & INITIALS	PLANNED ARRIVAL DATE	HERE & INSP INITIALS
7	36	36		EA	12311	00005434	0	SHCS M6x30 SS	Stainless Steel, 304		MSC 68016088	7/6/2007					
7	36	36		EA	12312	00005434	0	SHCS M6x30 SS	Stainless Steel, 304		MSC 68016088	7/6/2007					
7	36	36		EA	12313	00005434	0	SHCS M6x30 SS	Stainless Steel, 304		MSC 68016088	7/6/2007					
7	36	36		EA	12314	00005434	0	SHCS M6x30 SS	Stainless Steel, 304		MSC 68016088	7/6/2007					
25	4	4		EA	12516	00005434	0	SHCS M6x30 SS	Stainless Steel, 304		MSC 68016088	8/28/2007					
19	12	12		EA	12151	00005438	0	SHCS M6x25 SS	Stainless Steel, 304		MSC 68016047	7/6/2007					
17	6	24		EA	12523	00005438	0	SHCS M6x25 SS	Stainless Steel, 304		MSC 68016047	7/6/2007					
7	1	212		EA	12296	00005440	0	SHCS M4x25 SS	Stainless Steel, 304		MSC 68015643	7/6/2007					
9	1	4		EA	12327	00005440	0	SHCS M4x25 SS	Stainless Steel, 304		MSC 68015643	7/6/2007					
9	1	4		EA	12328	00005440	0	SHCS M4x25 SS	Stainless Steel, 304		MSC 68015643	7/6/2007					
16	8	32		EA	12523	00005502	0	SHCS M5x16 SS	Stainless Steel, 304		MSC 68015767	7/6/2007					
25	8	8		EA	12206	00005504	0	SHCS M6x20 SS	Stainless Steel, 304		MSC 68016005	8/28/2007					
9	1	212		EA	12296	00005504	0	SHCS M6x20 SS	Stainless Steel, 304		MSC 68016005	7/6/2007					
11	1	4		EA	12327	00005504	0	SHCS M6x20 SS	Stainless Steel, 304		MSC 68016005	7/6/2007					
11	1	4		EA	12328	00005504	0	SHCS M6x20 SS	Stainless Steel, 304		MSC 68016005	7/6/2007					
24	6	6		EA	12339	00005504	0	SHCS M6x20 SS	Stainless Steel, 304		MSC 68016005	7/6/2007					
24	4	4		EA	12206	00005521	0	SHCS M5x12 SS	Stainless Steel, 304		MSC 68015726	8/28/2007					
28	28	28		EA	12206	00005535	0	SHCS M8x30 SS	Stainless Steel, 304		MSC 68016401	8/28/2007					
25	40	40		EA	12339	00005535	0	SHCS M8x30 SS	Stainless Steel, 304		MSC 68016401	7/6/2007					
27	28	28		EA	12516	00005535	0	SHCS M8x30 SS	Stainless Steel, 304		MSC 68016401	8/28/2007					
20	4	16		EA	12523	00005549	0	SHCS M8x40 SS	Stainless Steel, 304		MSC 68016484	7/6/2007					
23	12	12		EA	12339	00005704	0	SHCS M4x12 SS	Stainless Steel, 304		MSC 68015528	7/6/2007					
5	3	6		EA	12555	00005704	0	SHCS M4x12 SS	Stainless Steel, 304		MSC 68015528	7/6/2007					
6	2	424		EA	12296	00005706	0	SHCS M4x14 316SS	Stainless Steel, 316		McMaster-Carr 92290A150	7/6/2007					
4	2	8		EA	12521	00005732	0	SHCS M2.5x12 SS	Stainless Steel, 304		MSC 06064307	7/6/2007					
4	2	4		EA	12555	00005732	0	SHCS M2.5x12 SS	Stainless Steel, 304		MSC 06064307	7/6/2007					
27	4	4		EA	12339	00005801	0	SHCS M10x30 SS	Stainless Steel, 304		MSC 68016641	7/6/2007					
28	4	4		EA	12516	00005801	0	SHCS M10x30 SS	Stainless Steel, 304		MSC 68016641	8/28/2007					
20	6	6		EA	12151	00005802	0	SHCS M10x35 SS	Stainless Steel, 304		MSC 68016682	7/6/2007					
19	8	8		EA	12152	00005802	0	SHCS M10x35 SS	Stainless Steel, 304		MSC 68016682	7/6/2007					
21	4	4		EA	12155	00005861	0	SHCS M6x18 SS	Stainless Steel, 304		McMaster-Carr 91292A136	7/6/2007					
17	8	8		EA	12151	00006031	0	SHCS M3x8 SS	Stainless Steel, 304		MSC 68015320	7/6/2007					
16	8	8		EA	12152	00006031	0	SHCS M3x8 SS	Stainless Steel, 304		MSC 68015320	7/6/2007					

ADC JOB Bill of Material

PROJECT NUMBER	11-778
SRC EPU 60.0	00012155
PROJECT ENGINEER	A Lyndaker

NUMBER OF ASSEMBLIES:	1
REVISION:	2
REV. DATE:	8/12/2008

DWG ITEM	DWG QTY	JOB QTY	QTY ON HAND	U of M	ASSY #	PART #	REV #	DESCRIPTION	MATERIAL	MOD	VENDOR & VENDOR PART NUMBER	RELEASE DATE	PURCH PART PO#	ORDER DATE & INITIALS	STATUS LAST CHECKED DATE & INITIALS	PLANNED ARRIVAL DATE	HERE & INSP INITIALS
14	4	16		EA	12523	00006031	0	SHCS M3x8 SS	Stainless Steel, 304		MSC 68015320	7/6/2007					
6	4	8		EA	12558	00006031	0	SHCS M3x8 SS	Stainless Steel, 304		MSC 68015320	7/6/2007					
6	4	8		EA	12559	00006031	0	SHCS M3x8 SS	Stainless Steel, 304		MSC 68015320	7/6/2007					
15	4	16		EA	12523	00006037	0	SHCS M3x25 SS	Stainless Steel, 304		McMaster-Carr 91292A020	7/6/2007					
5	3	12		EA	12521	00006048	0	SHCS M4x18 SS	Stainless Steel, 304		McMaster-Carr 91292A043	7/6/2007					
23	4	4		EA	12516	00006056	0	SHCS M5x10 SS	Stainless Steel, 304		MSC 68015700	8/28/2007					
18	72	72		EA	12151	00006059	0	SHCS M5x20 SS	Stainless Steel, 304		MSC 68015809	7/6/2007					
17	72	72		EA	12152	00006059	0	SHCS M5x20 SS	Stainless Steel, 304		MSC 68015809	7/6/2007					
6	2	8		EA	12521	00006061	0	SHCS M5x30 SS	Stainless Steel, 304		MSC 68015833	7/6/2007					
7	2	4		EA	12558	00006061	0	SHCS M5x30 SS	Stainless Steel, 304		MSC 68015833	7/6/2007					
7	2	4		EA	12559	00006061	0	SHCS M5x30 SS	Stainless Steel, 304		MSC 68015833	7/6/2007					
19	12	12		EA	12155	00006072	0	SHCS M6x12 SS	Stainless Steel, 304		MSC 68015924	7/6/2007					
24	8	8		EA	12516	00006074	0	SHCS M6x16 SS	Stainless Steel, 304		MSC 68015965	8/28/2007					
18	3	12		EA	12523	00006078	0	SHCS M6x50 SS	Stainless Steel, 304		MSC 68016203	7/6/2007					
26	8	8		EA	12206	00006085	0	SHCS M6x100 SS	Stainless Steel, 304		McMaster-Carr 91292A205	8/28/2007					
26	8	8		EA	12516	00006085	0	SHCS M6x100 SS	Stainless Steel, 304		McMaster-Carr 91292A205	8/28/2007					
27	16	16		EA	12206	00006096	0	SHCS M8x25 SS	Stainless Steel, 304		MSC 68016369	8/28/2007					
19	4	16		EA	12523	00006096	0	SHCS M8x25 SS	Stainless Steel, 304		MSC 68016369	7/6/2007					
26	8	8		EA	12339	00006097	0	SHCS M8x45 SS	Stainless Steel, 304		McMaster-Carr 91292A208	7/6/2007					
18	4	4		EA	12152	00006099	0	SHCS M8x65 SS	Stainless Steel, 304		McMaster-Carr 91292A210	7/6/2007					
21	4	16		EA	12523	00006103	0	SHCS M8x90 SS	Stainless Steel, 304		McMaster-Carr 91292A213	7/6/2007					
21	20	20		EA	12151	00006112	0	SHCS M10x40 SS	Stainless Steel, 304		MSC 68016708	7/6/2007					
20	20	20		EA	12152	00006112	0	SHCS M10x40 SS	Stainless Steel, 304		MSC 68016708	7/6/2007					
28	8	8		EA	12339	00006131	0	SHCS M12x35 SS	Stainless Steel, 304		MSC 68016815	7/6/2007					
29	12	12		EA	12206	00006132	0	SHCS M12x40 SS	Stainless Steel, 304		MSC 68016831	8/28/2007					
29	12	12		EA	12516	00006132	0	SHCS M12x40 SS	Stainless Steel, 304		MSC 68016831	8/28/2007					
29	60	60		EA	12339	00006133	0	SHCS M12x45 SS	Stainless Steel, 304		MSC 68016849	7/6/2007					
22	18	18		EA	12151	00006134	0	SHCS M12x50 SS	Stainless Steel, 304		MSC 68016856	7/6/2007					
21	18	18		EA	12152	00006134	0	SHCS M12x50 SS	Stainless Steel, 304		MSC 68016856	7/6/2007					
30	28	28		EA	12339	00006143	0	SHCS M12x110 SS	Stainless Steel, 304		McMaster-Carr 91292A670	7/6/2007					
12	1	212		EA	12296	00006613	0	M4 Flat Washer, SS	Stainless Steel, 304		MSC 73019093	7/6/2007					
14	1	4		EA	12327	00006613	0	M4 Flat Washer, SS	Stainless Steel, 304		MSC 73019093	7/6/2007					
14	1	4		EA	12328	00006613	0	M4 Flat Washer, SS	Stainless Steel, 304		MSC 73019093	7/6/2007					

ADC JOB Bill of Material

PROJECT NUMBER	11-778
SRC EPU 60.0	00012155
PROJECT ENGINEER	A Lyndaker

NUMBER OF ASSEMBLIES:	1
REVISION:	2
REV. DATE:	8/12/2008

DWG ITEM	DWG QTY	JOB QTY	QTY ON HAND	U of M	ASSY #	PART #	REV #	DESCRIPTION	MATERIAL	MOD	VENDOR & VENDOR PART NUMBER	RELEASE DATE	PURCH PART PO#	ORDER DATE & INITIALS	STATUS LAST CHECKED DATE & INITIALS	PLANNED ARRIVAL DATE	HERE & INSP INITIALS
33	12	12		EA	12339	00006613	0	M4 Flat Washer, SS	Stainless Steel, 304		MSC 73019093	7/6/2007					
23	3	3		EA	12206	00006638	0	SHCS 8-32x5/8 SS	Stainless Steel, 304		MSC 05667068	8/28/2007					
22	3	3		EA	12516	00006638	0	SHCS 8-32x5/8 SS	Stainless Steel, 304		MSC 05667068	8/28/2007					
30	8	8		EA	12206	00006732	0	Flat Washer, M6 SS	Stainless Steel, 304		McMaster-Carr 93475A250	8/28/2007					
13	1	212		EA	12296	00006732	0	Flat Washer, M6 SS	Stainless Steel, 304		McMaster-Carr 93475A250	7/6/2007					
16	1	4		EA	12327	00006732	0	Flat Washer, M6 SS	Stainless Steel, 304		McMaster-Carr 93475A250	7/6/2007					
15	1	4		EA	12328	00006732	0	Flat Washer, M6 SS	Stainless Steel, 304		McMaster-Carr 93475A250	7/6/2007					
34	6	6		EA	12339	00006732	0	Flat Washer, M6 SS	Stainless Steel, 304		McMaster-Carr 93475A250	7/6/2007					
30	12	12		EA	12516	00006732	0	Flat Washer, M6 SS	Stainless Steel, 304		McMaster-Carr 93475A250	8/28/2007					
23	4	16		EA	12523	00006995	0	M3 Flat Washer ss	Stainless Steel, 304		McMaster Carr 93475A210	7/6/2007					
11	1	1		EA	12151	00007355	0	Survey Plate Subassembly		No	Customer Supplied	7/6/2007					
20	1	1		EA	12339	00007355	0	Survey Plate Subassembly		No	Customer Supplied	7/6/2007					
15	2	2		EA	12151	00007367	0	Target	Delrin, White	No	Brunson 706-1W	7/6/2007					
2	4	4		EA	12151	00007398	1	Runner Block Grind Shim Size 35	Steel, Mild	No	ADC	7/6/2007					
2	4	4		EA	12152	00007398	1	Runner Block Grind Shim Size 35	Steel, Mild	No	ADC	7/6/2007					
10	1	1		EA	12155	00007408		Hinge Modification	McMaster-Carr 15665A173	Yes	ADC	7/6/2007					
8	4	8		EA	12558	00007480	8	FHCS M5x12 SS	Stainless Steel, 304		McMaster-Carr 92125A210	7/6/2007					
8	4	8		EA	12559	00007480	8	FHCS M5x12 SS	Stainless Steel, 304		McMaster-Carr 92125A210	7/6/2007					
20	6	6		EA	12155	00007560	0	Hex Nut M6x1 SS	Stainless Steel, 304		MSC 68024207	7/6/2007					
9	19	19		EA	12311	00007777	0	Hex Jam Nut, M8x1.25 SS	Stainless Steel, 304		McMaster-Carr 90710A120	7/6/2007					
9	19	19		EA	12312	00007777	0	Hex Jam Nut, M8x1.25 SS	Stainless Steel, 304		McMaster-Carr 90710A120	7/6/2007					
9	19	19		EA	12313	00007777	0	Hex Jam Nut, M8x1.25 SS	Stainless Steel, 304		McMaster-Carr 90710A120	7/6/2007					
9	19	19		EA	12314	00007777	0	Hex Jam Nut, M8x1.25 SS	Stainless Steel, 304		McMaster-Carr 90710A120	7/6/2007					
15	1	212		EA	12296	00008520	0	Hollow Lock Set Screw 5/16-24x5/32	Stainless Steel, 304		McMaster# 91318A550	7/6/2007					
7	1	4		EA	12327	00008520	0	Hollow Lock Set Screw 5/16-24x5/32	Stainless Steel, 304		McMaster# 91318A550	7/6/2007					
7	1	4		EA	12328	00008520	0	Hollow Lock Set Screw 5/16-24x5/32	Stainless Steel, 304		McMaster# 91318A550	7/6/2007					
32	2	2		EA	12206	00008619	0	Cup Pt. Set Screw M6x6 SS	Stainless Steel, 304		McMaster-Carr 92015A126	8/12/2008					
31	2	2		EA	12516	00008619	0	Cup Pt. Set Screw M6x6 SS	Stainless Steel, 304		McMaster-Carr 92015A126	8/12/2008					
1	2	424		EA	12296	00008739	2	Magnet Clip	Aluminum-6061	No	ADC	7/6/2007					
2	1	212		EA	12296	00008740	1	Wedge T-Nut	Stainless Steel, 316	No	ADC	7/6/2007					
1	1	4		EA	12327	00008740	1	Wedge T-Nut	Stainless Steel, 316	No	ADC	7/6/2007					
1	1	4		EA	12328	00008740	1	Wedge T-Nut	Stainless Steel, 316	No	ADC	7/6/2007					
13	2	4		EA	12315	00008744	0	Dog Pt Set Screw M5x8 SS	Stainless Steel, 304		Metric & Multistandard 915 A2 5 x 8	7/6/2007					

ADC JOB Bill of Material

PROJECT NUMBER	11-778
SRC EPU 60.0	00012155
PROJECT ENGINEER	A Lyndaker

NUMBER OF ASSEMBLIES:	1
REVISION:	2
REV. DATE:	8/12/2008

DWG ITEM	DWG QTY	JOB QTY	QTY ON HAND	U of M	ASSY #	PART #	REV #	DESCRIPTION	MATERIAL	MOD	VENDOR & VENDOR PART NUMBER	RELEASE DATE	PURCH PART PO#	ORDER DATE & INITIALS	STATUS LAST CHECKED DATE & INITIALS	PLANNED ARRIVAL DATE	HERE & INSP INITIALS
14	3	6		EA	12316	00008744	0	Dog Pt Set Screw M5x8 SS	Stainless Steel, 304		Metric & Multistandard 915 A2 5 x 8	7/6/2007					
15	4	8		EA	12317	00008744	0	Dog Pt Set Screw M5x8 SS	Stainless Steel, 304		Metric & Multistandard 915 A2 5 x 8						
15	5	10		EA	12318	00008744	0	Dog Pt Set Screw M5x8 SS	Stainless Steel, 304		Metric & Multistandard 915 A2 5 x 8	7/6/2007					
6	5	80		EA	12319	00008744	0	Dog Pt Set Screw M5x8 SS	Stainless Steel, 304		Metric & Multistandard 915 A2 5 x 8	7/6/2007					
6	7	112		EA	12320	00008744	0	Dog Pt Set Screw M5x8 SS	Stainless Steel, 304		Metric & Multistandard 915 A2 5 x 8	7/6/2007					
8	19	19		EA	12311	00008788	0	Dog Pt Set Screw M8x16 SS	Stainless Steel, 304		McMaster-Carr 92775A314	7/6/2007					
8	19	19		EA	12312	00008788	0	Dog Pt Set Screw M8x16 SS	Stainless Steel, 304		McMaster-Carr 92775A314	7/6/2007					
8	19	19		EA	12313	00008788	0	Dog Pt Set Screw M8x16 SS	Stainless Steel, 304		McMaster-Carr 92775A314	7/6/2007					
8	19	19		EA	12314	00008788	0	Dog Pt Set Screw M8x16 SS	Stainless Steel, 304		McMaster-Carr 92775A314	7/6/2007					
9	2	4		EA	12558	00008842	0	Washer, M5 DIN 125 SS	Stainless Steel, 304		McMaster-Carr 93475A240	7/6/2007					
9	2	4		EA	12559	00008842	0	Washer, M5 DIN 125 SS	Stainless Steel, 304		McMaster-Carr 93475A240	7/6/2007					
8	2	8		EA	12521	00009515	1	Dog Pt. Set Screw M3x8 SS	Stainless Steel, 304		MSC 57087306	7/6/2007					
7	2	4		EA	12555	00009515	1	Dog Pt. Set Screw M3x8 SS	Stainless Steel, 304		MSC 57087306	7/6/2007					
2	20	20		EA	12596	00010945	0	Helical Insert M12x24, SS	Stainless Steel, 304	No	McMaster-Carr 91732A812	7/6/2007					
2	4	4		EA	12597	00010945	0	Helical Insert M12x24, SS	Stainless Steel, 304	No	McMaster-Carr 91732A812	7/6/2007					
9	1	2		EA	12317	00012144	2	Magnet Block H	NdFeB	No	TBD						
9	1	2		EA	12318	00012144	2	Magnet Block H	NdFeB	No	TBD	7/6/2007					
4	3	48		EA	12319	00012144	2	Magnet Block H	NdFeB	No	TBD	7/6/2007					
4	3	48		EA	12320	00012144	2	Magnet Block H	NdFeB	No	TBD	7/6/2007					
9	1	2		EA	12315	00012145	2	Magnet Block H1E	NdFeB	No	TBD	7/6/2007					
9	1	2		EA	12316	00012145	2	Magnet Block H1E	NdFeB	No	TBD	7/6/2007					
10	1	2		EA	12317	00012145	2	Magnet Block H1E	NdFeB	No	TBD						
10	1	2		EA	12318	00012145	2	Magnet Block H1E	NdFeB	No	TBD	7/6/2007					
10	1	2		EA	12315	00012146	2	Magnet Block H2E	NdFeB	No	TBD	7/6/2007					
10	1	2		EA	12316	00012146	2	Magnet Block H2E	NdFeB	No	TBD	7/6/2007					
11	1	2		EA	12317	00012146	2	Magnet Block H2E	NdFeB	No	TBD						
11	1	2		EA	12318	00012146	2	Magnet Block H2E	NdFeB	No	TBD	7/6/2007					
11	1	2		EA	12316	00012147	2	Magnet Block V	NdFeB	No	TBD	7/6/2007					
12	1	2		EA	12317	00012147	2	Magnet Block V	NdFeB	No	TBD						
12	2	4		EA	12318	00012147	2	Magnet Block V	NdFeB	No	TBD	7/6/2007					
5	2	32		EA	12319	00012147	2	Magnet Block V	NdFeB	No	TBD	7/6/2007					
5	4	64		EA	12320	00012147	2	Magnet Block V	NdFeB	No	TBD	7/6/2007					
11	1	2		EA	12315	00012148	2	Magnet Block VE	NdFeB	No	TBD	7/6/2007					

ADC JOB Bill of Material

PROJECT NUMBER	11-778
SRC EPU 60.0	00012155
PROJECT ENGINEER	A Lyndaker

NUMBER OF ASSEMBLIES:	1
REVISION:	2
REV. DATE:	8/12/2008

DWG ITEM	DWG QTY	JOB QTY	QTY ON HAND	U of M	ASSY #	PART #	REV #	DESCRIPTION	MATERIAL	MOD	VENDOR & VENDOR PART NUMBER	RELEASE DATE	PURCH PART PO#	ORDER DATE & INITIALS	STATUS LAST CHECKED DATE & INITIALS	PLANNED ARRIVAL DATE	HERE & INSP INITIALS
12	1	2		EA	12316	00012148	2	Magnet Block VE	NdFeB	No	TBD	7/6/2007					
13	1	2		EA	12317	00012148	2	Magnet Block VE	NdFeB	No	TBD						
13	1	2		EA	12318	00012148	2	Magnet Block VE	NdFeB	No	TBD	7/6/2007					
6	1	1		EA	12311	00012149	A	SRC Subgirder	Stainless Steel, 304	No	ADC	7/6/2007					
6	1	1		EA	12312	00012149	A	SRC Subgirder	Stainless Steel, 304	No	ADC	7/6/2007					
6	1	1		EA	12313	00012149	A	SRC Subgirder	Stainless Steel, 304	No	ADC	7/6/2007					
6	1	1		EA	12314	00012149	A	SRC Subgirder	Stainless Steel, 304	No	ADC	7/6/2007					
3	1	1		EA	12152	00012150	0	SRC Lower Girder	Aluminum, M-1 Mold Plate	No	ADC	7/6/2007					
1	1	1		EA	12155	00012151	0	SRC Girder Assembly, Upper		No	ADC	7/6/2007					
2	1	1		EA	12155	00012152	0	SRC Girder Assembly, Lower		No	ADC	7/6/2007					
3	1	1		EA	12155	00012206	0	Lower Gap Drive Assembly, SRC		No	ADC	7/6/2007					
3	1	4		EA	12521	00012208	0	Optical Encoder w/ 70mm Scale Tape	Various	No	Heidenhain LIF471	7/6/2007					
3	1	2		EA	12555	00012208	0	Optical Encoder w/ 70mm Scale Tape	Various	No	Heidenhain LIF471	7/6/2007					
7	1	4		EA	12523	00012216	0	Pillow Block Unit	Various	No	Rexroth R1591 112 20	7/6/2007					
3	1	1		EA	12151	00012218	0	Girder Hanger LH	Steel, Mild	No	ADC	7/6/2007					
4	1	1		EA	12152	00012218	0	Girder Hanger LH	Steel, Mild	No	ADC	7/6/2007					
4	1	1		EA	12151	00012219	0	Girder Hanger RH	Steel, Mild	No	ADC	7/6/2007					
5	1	1		EA	12152	00012219	0	Girder Hanger RH	Steel, Mild	No	ADC	7/6/2007					
1	1	4		EA	12523	00012241	0	Ball Nut Housing	Stainless Steel, 316	No	ADC	7/6/2007					
13	2	2		EA	12151	00012292	0	SRC N/O Rail Assembly	Various	No	Schneeberger	7/6/2007					
13	2	2		EA	12152	00012292	0	SRC N/O Rail Assembly	Various	No	Schneeberger	7/6/2007					
3	1	212		EA	12296	00012294	0	SRC Magnet Holder	Aluminum-6061	No	ADC	7/6/2007					
4	1	212		EA	12296	00012295	0	SRC Adjustment Wedge	Aluminum-6061	No	ADC	7/6/2007					
2	1	4		EA	12327	00012295	0	SRC Adjustment Wedge	Aluminum-6061	No	ADC	7/6/2007					
2	1	4		EA	12328	00012295	0	SRC Adjustment Wedge	Aluminum-6061	No	ADC	7/6/2007					
1	1	2		EA	12315	00012296	0	SRC Magnet Holder Assembly		No	ADC	7/6/2007					
1	2	4		EA	12316	00012296	0	SRC Magnet Holder Assembly		No	ADC	7/6/2007					
1	3	6		EA	12317	00012296	0	SRC Magnet Holder Assembly		No	ADC						
1	4	8		EA	12318	00012296	0	SRC Magnet Holder Assembly		No	ADC	7/6/2007					
1	5	80		EA	12319	00012296	0	SRC Magnet Holder Assembly		No	ADC	7/6/2007					
1	7	112		EA	12320	00012296	0	SRC Magnet Holder Assembly		No	ADC	7/6/2007					
11	1	212		EA	12296	00012297	0	SHCS M6x55 316SS	Stainless Steel, 316		McMaster-Carr 92290A340	7/6/2007					
13	1	4		EA	12327	00012297	0	SHCS M6x55 316SS	Stainless Steel, 316		McMaster-Carr 92290A340	7/6/2007					

ADC JOB Bill of Material

PROJECT NUMBER	11-778
SRC EPU 60.0	00012155
PROJECT ENGINEER	A Lyndaker

NUMBER OF ASSEMBLIES:	1
REVISION:	2
REV. DATE:	8/12/2008

DWG ITEM	DWG QTY	JOB QTY	QTY ON HAND	U of M	ASSY #	PART #	REV #	DESCRIPTION	MATERIAL	MOD	VENDOR & VENDOR PART NUMBER	RELEASE DATE	PURCH PART PO#	ORDER DATE & INITIALS	STATUS LAST CHECKED DATE & INITIALS	PLANNED ARRIVAL DATE	HERE & INSP INITIALS
13	1	4		EA	12328	00012297	0	SHCS M6x55 316SS	Stainless Steel, 316		McMaster-Carr 92290A340	7/6/2007					
10	1	212		EA	12296	00012298	0	SHCS M6x50 316SS	Stainless Steel, 316		McMaster-Carr 92290A339	7/6/2007					
12	1	4		EA	12327	00012298	0	SHCS M6x50 316SS	Stainless Steel, 316		McMaster-Carr 92290A339	7/6/2007					
12	1	4		EA	12328	00012298	0	SHCS M6x50 316SS	Stainless Steel, 316		McMaster-Carr 92290A339	7/6/2007					
5	1	212		EA	12296	00012299	0	Helical Insert M4x8, Locking	Stainless Steel, 304	No	MSC 70065321	7/6/2007					
6	1	4		EA	12327	00012299	0	Helical Insert M4x8, Locking	Stainless Steel, 304	No	MSC 70065321	7/6/2007					
6	1	4		EA	12328	00012299	0	Helical Insert M4x8, Locking	Stainless Steel, 304	No	MSC 70065321	7/6/2007					
8	1	212		EA	12296	00012300	0	SHCS M4x35 316SS	Stainless Steel, 316		McMaster-Carr 92290A182	7/6/2007					
10	1	4		EA	12327	00012300	0	SHCS M4x35 316SS	Stainless Steel, 316		McMaster-Carr 92290A182	7/6/2007					
10	1	4		EA	12328	00012300	0	SHCS M4x35 316SS	Stainless Steel, 316		McMaster-Carr 92290A182	7/6/2007					
3	1	2		EA	12318	00012301	0	5 Array Magnet Holder	Aluminum-6061	No	ADC	7/6/2007					
2	1	16		EA	12319	00012301	0	5 Array Magnet Holder	Aluminum-6061	No	ADC	7/6/2007					
2	1	16		EA	12320	00012302	0	7 Array Magnet Holder	Aluminum-6061	No	ADC	7/6/2007					
3	1	2		EA	12316	00012303	0	3 Array Magnet Holder	Aluminum-6061	No	ADC	7/6/2007					
14	2	424		EA	12296	00012304	0	Small OD Flat Washer M6 316SS	Stainless Steel, 316	No	Metric & Multistandard 433 A4 6	7/6/2007					
15	2	8		EA	12327	00012304	0	Small OD Flat Washer M6 316SS	Stainless Steel, 316	No	Metric & Multistandard 433 A4 6	7/6/2007					
16	2	8		EA	12328	00012304	0	Small OD Flat Washer M6 316SS	Stainless Steel, 316	No	Metric & Multistandard 433 A4 6	7/6/2007					
12	2	4		EA	12315	00012305	0	SHCS M2.5x6 316SS	Stainless Steel, 316		McMaster-Carr 92290A056	7/6/2007					
13	2	4		EA	12316	00012305	0	SHCS M2.5x6 316SS	Stainless Steel, 316		McMaster-Carr 92290A056	7/6/2007					
14	2	4		EA	12317	00012305	0	SHCS M2.5x6 316SS	Stainless Steel, 316		McMaster-Carr 92290A056						
14	2	4		EA	12318	00012305	0	SHCS M2.5x6 316SS	Stainless Steel, 316		McMaster-Carr 92290A056	7/6/2007					
8	4	16		EA	12327	00012306	0	SHCS M2.5x12 316SS	Stainless Steel, 316		McMaster-Carr 92290A062	7/6/2007					
8	4	16		EA	12328	00012306	0	SHCS M2.5x12 316SS	Stainless Steel, 316		McMaster-Carr 92290A062	7/6/2007					
4	1	1		EA	12155	00012311	0	Magnet Array Assembly, Lower Inner		No	ADC	7/6/2007					
5	1	1		EA	12155	00012312	0	Magnet Array Assembly, Lower Outer		No	ADC	7/6/2007					
6	1	1		EA	12155	00012313	0	Magnet Array Assembly, Upper Inner		No	ADC	7/6/2007					
7	1	1		EA	12155	00012314	0	Magnet Array Assembly, Upper Outer		No	ADC	7/6/2007					
1	1	1		EA	12311	00012315	0	SRC End Array Assembly 1		No	ADC	7/6/2007					
1	1	1		EA	12313	00012315	0	SRC End Array Assembly 1		No	ADC	7/6/2007					
1	1	1		EA	12312	00012316	0	SRC End Array Assembly 2		No	ADC	7/6/2007					
1	1	1		EA	12314	00012316	0	SRC End Array Assembly 2		No	ADC	7/6/2007					
2	1	1		EA	12312	00012317	0	SRC End Array Assembly 3		No	ADC	7/6/2007					
2	1	1		EA	12314	00012317	0	SRC End Array Assembly 3		No	ADC	7/6/2007					

ADC JOB Bill of Material

PROJECT NUMBER	11-778
SRC EPU 60.0	00012155
PROJECT ENGINEER	A Lyndaker

NUMBER OF ASSEMBLIES:	1
REVISION:	2
REV. DATE:	8/12/2008

DWG ITEM	DWG QTY	JOB QTY	QTY ON HAND	U of M	ASSY #	PART #	REV #	DESCRIPTION	MATERIAL	MOD	VENDOR & VENDOR PART NUMBER	RELEASE DATE	PURCH PART PO#	ORDER DATE & INITIALS	STATUS LAST CHECKED DATE & INITIALS	PLANNED ARRIVAL DATE	HERE & INSP INITIALS
2	1	1		EA	12311	00012318	0	SRC End Array Assembly 4		No	ADC	7/6/2007					
2	1	1		EA	12313	00012318	0	SRC End Array Assembly 4		No	ADC	7/6/2007					
3	4	4		EA	12311	00012319	0	SRC 5 Magnet Array Assembly		No	ADC	7/6/2007					
3	4	4		EA	12312	00012319	0	SRC 5 Magnet Array Assembly		No	ADC	7/6/2007					
3	4	4		EA	12313	00012319	0	SRC 5 Magnet Array Assembly		No	ADC	7/6/2007					
3	4	4		EA	12314	00012319	0	SRC 5 Magnet Array Assembly		No	ADC	7/6/2007					
4	4	4		EA	12311	00012320	0	SRC 7 Magnet Array Assembly		No	ADC	7/6/2007					
4	4	4		EA	12312	00012320	0	SRC 7 Magnet Array Assembly		No	ADC	7/6/2007					
4	4	4		EA	12313	00012320	0	SRC 7 Magnet Array Assembly		No	ADC	7/6/2007					
4	4	4		EA	12314	00012320	0	SRC 7 Magnet Array Assembly		No	ADC	7/6/2007					
3	2	4		EA	12315	00012321	0	SRC End Spacer 1	Aluminum-6061	No	ADC	7/6/2007					
4	2	4		EA	12316	00012321	0	SRC End Spacer 1	Aluminum-6061	No	ADC	7/6/2007					
3	2	4		EA	12317	00012321	0	SRC End Spacer 1	Aluminum-6061	No	ADC						
4	2	4		EA	12318	00012321	0	SRC End Spacer 1	Aluminum-6061	No	ADC	7/6/2007					
4	1	2		EA	12315	00012322	0	SRC End Spacer 2	Aluminum-6061	No	ADC	7/6/2007					
5	1	2		EA	12316	00012322	0	SRC End Spacer 2	Aluminum-6061	No	ADC	7/6/2007					
4	1	2		EA	12317	00012322	0	SRC End Spacer 2	Aluminum-6061	No	ADC						
5	1	2		EA	12318	00012322	0	SRC End Spacer 2	Aluminum-6061	No	ADC	7/6/2007					
5	1	2		EA	12315	00012323	0	SRC End Spacer 3	Aluminum-6061	No	ADC	7/6/2007					
6	1	2		EA	12316	00012323	0	SRC End Spacer 3	Aluminum-6061	No	ADC	7/6/2007					
5	1	2		EA	12317	00012323	0	SRC End Spacer 3	Aluminum-6061	No	ADC						
6	1	2		EA	12318	00012323	0	SRC End Spacer 3	Aluminum-6061	No	ADC	7/6/2007					
6	1	2		EA	12315	00012324	0	End Magnet Cover Plate	Aluminum-6061	No	ADC	7/6/2007					
7	1	2		EA	12316	00012324	0	End Magnet Cover Plate	Aluminum-6061	No	ADC	7/6/2007					
6	1	2		EA	12317	00012324	0	End Magnet Cover Plate	Aluminum-6061	No	ADC						
7	1	2		EA	12318	00012324	0	End Magnet Cover Plate	Aluminum-6061	No	ADC	7/6/2007					
7	1	2		EA	12315	00012325	0	2 Array Magnet Holder	Aluminum-6061	No	ADC	7/6/2007					
7	1	2		EA	12317	00012326	0	4 Array Magnet Holder	Aluminum-6061	No	ADC						
2	1	2		EA	12316	00012327	0	End Magnet Holder Assembly 1		No	ADC	7/6/2007					
2	1	2		EA	12318	00012327	0	End Magnet Holder Assembly 1		No	ADC	7/6/2007					
2	1	2		EA	12315	00012328	0	End Magnet Holder Assembly 2		No	ADC	7/6/2007					
2	1	2		EA	12317	00012328	0	End Magnet Holder Assembly 2		No	ADC						
3	1	4		EA	12327	00012329	0	End Magnet Holder 1	Aluminum-6061	No	ADC	7/6/2007					

ADC JOB Bill of Material

PROJECT NUMBER	11-778
SRC EPU 60.0	00012155
PROJECT ENGINEER	A Lyndaker

NUMBER OF ASSEMBLIES:	1
REVISION:	2
REV. DATE:	8/12/2008

DWG ITEM	DWG QTY	JOB QTY	QTY ON HAND	U of M	ASSY #	PART #	REV #	DESCRIPTION	MATERIAL	MOD	VENDOR & VENDOR PART NUMBER	RELEASE DATE	PURCH PART PO#	ORDER DATE & INITIALS	STATUS LAST CHECKED DATE & INITIALS	PLANNED ARRIVAL DATE	HERE & INSP INITIALS
3	1	4		EA	12328	00012330	0	End Magnet Holder 2	Aluminum-6061	No	ADC	7/6/2007					
4	2	8		EA	12327	00012331	0	End Magnet Clamp 1	Aluminum-6061	No	ADC	7/6/2007					
4	2	8		EA	12328	00012331	0	End Magnet Clamp 1	Aluminum-6061	No	ADC	7/6/2007					
5	2	8		EA	12327	00012332	0	End Magnet Clamp 2	Aluminum-6061	No	ADC	7/6/2007					
5	2	8		EA	12328	00012332	0	End Magnet Clamp 2	Aluminum-6061	No	ADC	7/6/2007					
2	1	4		EA	12523	00012334	0	Gearbox Mount Plate, Phase Drive	Aluminum-6061	No	ADC	7/6/2007					
3	2	8		EA	12523	00012335	0	Hard Stop Key	Stainless Steel, 304	No	ADC	7/6/2007					
1	1	4		EA	12521	00012336	0	Encoder Adjustment Plate	Aluminum-6061	No	ADC	7/6/2007					
2	1	4		EA	12521	00012337	0	Encoder Mount Plate	Stainless Steel, 304	No	ADC	7/6/2007					
4	1	4		EA	12523	00012338	0	Bearing Unit Spacer Plate	Aluminum-6061	No	ADC	7/6/2007					
8	1	1		EA	12155	00012339	0	SRC Frame Assembly		No	ADC	7/6/2007					
1	1	1		EA	12339	00012340	0	Vertical Weldment L, SRC Frame	Steel, Mild	No	ADC	7/6/2007					
2	1	1		EA	12339	00012343	0	Vertical Weldment R, SRC Frame	Steel, Mild	No	ADC	7/6/2007					
1	1	1		EA	12340	00012345	0	Vertical Tube, SRC Frame	Steel, Mild	No	ADC	7/6/2007					
1	1	1		EA	12343	00012345	0	Vertical Tube, SRC Frame	Steel, Mild	No	ADC	7/6/2007					
2	2	2		EA	12340	00012346	0	Vertical Plate, SRC Frame	Steel, Mild	No	ADC	7/6/2007					
2	2	2		EA	12343	00012346	0	Vertical Plate, SRC Frame	Steel, Mild	No	ADC	7/6/2007					
3	2	2		EA	12340	00012347	0	End Plate, Vertical Weldment	Steel, Mild	No	ADC	7/6/2007					
3	2	2		EA	12343	00012347	0	End Plate, Vertical Weldment	Steel, Mild	No	ADC	7/6/2007					
8	1	1		EA	12339	00012353	0	Base Plate, SRC Frame	Aluminum-6061	No	ADC	7/6/2007					
1	1	1		EA	12206	00012479	0	Phase Adjuster Coupling	Steel, Mild	No	ADC	8/28/2007					
1	1	1		EA	12516	00012479	0	Phase Adjuster Coupling	Steel, Mild	No	ADC	8/28/2007					
14	1	1		EA	12206	00012480	0	Phase Adjuster	Various	No	Harmonic Drive Technologies HDI-10-5DT-5SK	8/28/2007					
13	1	1		EA	12516	00012480	0	Phase Adjuster	Various	No	Harmonic Drive Technologies HDI-10-5DT-5SK	8/28/2007					
15	1	1		EA	12206	00012481	0	Rigid Coupling 14mmx14mm SS	Stainless Steel, 303	No	McMaster-Carr 2469K45	8/28/2007					
14	1	1		EA	12516	00012481	0	Rigid Coupling 14mmx14mm SS	Stainless Steel, 303	No	McMaster-Carr 2469K45	8/28/2007					
2	1	1		EA	12206	00012482	0	Gap Drive Coupling Shaft	Stainless Steel, 304	No	ADC	8/28/2007					
2	1	1		EA	12516	00012482	0	Gap Drive Coupling Shaft	Stainless Steel, 304	No	ADC	8/28/2007					
3	1	1		EA	12206	00012483	0	Key, 3/16"x3/16"x1/2"	Steel, Mild	No	ADC	8/28/2007					
3	1	1		EA	12516	00012483	0	Key, 3/16"x3/16"x1/2"	Steel, Mild	No	ADC	8/28/2007					
16	2	2		EA	12206	00012484	0	Bellows Coupling 12mmx14mm	Various	No	R+W BKH/15/59/12/14	8/28/2007					
15	2	2		EA	12516	00012484	0	Bellows Coupling 12mmx14mm	Various	No	R+W BKH/15/59/12/14	8/28/2007					
8	1	4		EA	12523	00012485	0	Bellows Coupling 12x16mm	Various	No	R+W BKH/15/59/12/16	7/6/2007					

ADC JOB Bill of Material

PROJECT NUMBER	11-778
SRC EPU 60.0	00012155
PROJECT ENGINEER	A Lyndaker

NUMBER OF ASSEMBLIES:	1
REVISION:	2
REV. DATE:	8/12/2008

DWG ITEM	DWG QTY	JOB QTY	QTY ON HAND	U of M	ASSY #	PART #	REV #	DESCRIPTION	MATERIAL	MOD	VENDOR & VENDOR PART NUMBER	RELEASE DATE	PURCH PART PO#	ORDER DATE & INITIALS	STATUS LAST CHECKED DATE & INITIALS	PLANNED ARRIVAL DATE	HERE & INSP INITIALS
17	1	1		EA	12206	00012495	0	NEMA 23 High Voltage Step Motor	Various	No	Parker HV233-02-FL	8/28/2007					
16	1	1		EA	12516	00012495	0	NEMA 23 High Voltage Step Motor	Various	No	Parker HV233-02-FL	8/28/2007					
9	1	4		EA	12523	00012495	0	NEMA 23 High Voltage Step Motor	Various	No	Parker HV233-02-FL	7/6/2007					
5	2	2		EA	12151	00012498	0	Fiducial Stand	Aluminum-6061	No	ADC	7/6/2007					
6	1	1		EA	12151	00012499	0	SRC Upper Girder	Aluminum, M-1 Mold Plate	No	ADC	7/6/2007					
11	1	1		EA	12152	00012500	0	Survey Plate Subassembly 2		No	Customer Supplied	7/6/2007					
6	2	2		EA	12152	00012501	0	Survey Plate Mount Bracket	Aluminum-6061	No	ADC	7/6/2007					
9	1	1		EA	12339	00012510	0	Gearbox Mount Plate	Steel, Mild	No	ADC	7/6/2007					
9	1	1		EA	12516	00012510	0	Gearbox Mount Plate	Steel, Mild	No	ADC	8/28/2007					
4	4	4		EA	12206	00012511	0	Rino Gearbox Standoff	Aluminum-6061	No	ADC	8/28/2007					
5	2	2		EA	12206	00012512	0	Tandler Gearbox Standoff	Aluminum-6061	No	ADC	8/28/2007					
6	1	1		EA	12206	00012513	0	Gap Motor Mount Plate	Steel, Mild	No	ADC	8/28/2007					
4	1	1		EA	12516	00012513	0	Gap Motor Mount Plate	Steel, Mild	No	ADC	8/28/2007					
5	2	2		EA	12516	00012514	0	Motor Mount Arm	Aluminum-6061	No	ADC	8/28/2007					
7	2	2		EA	12206	00012515	0	Motor Mount Angle	Aluminum-6061	No	ADC	8/28/2007					
9	1	1		EA	12155	00012516	0	Upper Gap Drive Assembly, SRC		No	ADC	7/6/2007					
8	2	4		EA	12315	00012517	0	Gib Screw Pad, Short	Brass, Soft Yellow	No	ADC	7/6/2007					
8	3	6		EA	12316	00012517	0	Gib Screw Pad, Short	Brass, Soft Yellow	No	ADC	7/6/2007					
8	4	8		EA	12317	00012517	0	Gib Screw Pad, Short	Brass, Soft Yellow	No	ADC						
8	5	10		EA	12318	00012517	0	Gib Screw Pad, Short	Brass, Soft Yellow	No	ADC	7/6/2007					
3	5	80		EA	12319	00012517	0	Gib Screw Pad, Short	Brass, Soft Yellow	No	ADC	7/6/2007					
3	7	112		EA	12320	00012517	0	Gib Screw Pad, Short	Brass, Soft Yellow	No	ADC	7/6/2007					
11	2	2		EA	12155	00012518	0	SRC Correction Coil Assembly, Front		No	ADC	7/6/2007					
5	1	1		EA	12311	00012521	0	SRC Phase Encoder Subassembly		No	ADC	7/6/2007					
5	1	1		EA	12312	00012521	0	SRC Phase Encoder Subassembly		No	ADC	7/6/2007					
5	1	1		EA	12313	00012521	0	SRC Phase Encoder Subassembly		No	ADC	7/6/2007					
5	1	1		EA	12314	00012521	0	SRC Phase Encoder Subassembly		No	ADC	7/6/2007					
7	2	8		EA	12521	00012522	0	Small OD Flat Washer M2.5 SS	Stainless Steel, 304	No	Metric & Multistandard 433 A2 2.5	7/6/2007					
6	2	4		EA	12555	00012522	0	Small OD Flat Washer M2.5 SS	Stainless Steel, 304	No	Metric & Multistandard 433 A2 2.5	7/6/2007					
1	2	2		EA	12151	00012523	0	SRC Phase Drive Assembly		No	ADC	7/6/2007					
1	2	2		EA	12152	00012523	0	SRC Phase Drive Assembly		No	ADC	7/6/2007					
10	1	4		EA	12523	00012524	0	Phase Drive Ball Screw Assembly	Various	No	Rexroth (per ADC dwg)	7/6/2007					
11	1	4		EA	12523	00012525	0	SRC Phase Drive Right Angle Gearbox	Various	No	Alpha SK+060S-MF2-12-0X1	7/6/2007					

ADC JOB Bill of Material

PROJECT NUMBER	11-778
SRC EPU 60.0	00012155
PROJECT ENGINEER	A Lyndaker

NUMBER OF ASSEMBLIES:	1
REVISION:	2
REV. DATE:	8/12/2008

DWG ITEM	DWG QTY	JOB QTY	QTY ON HAND	U of M	ASSY #	PART #	REV #	DESCRIPTION	MATERIAL	MOD	VENDOR & VENDOR PART NUMBER	RELEASE DATE	PURCH PART PO#	ORDER DATE & INITIALS	STATUS LAST CHECKED DATE & INITIALS	PLANNED ARRIVAL DATE	HERE & INSP INITIALS
12	4	16		EA	12523	00012526	0	M3 Male/Female Threaded Hex Standoff	Stainless Steel, 304	No	McMaster-Carr 93655A428	7/6/2007					
5	1	4		EA	12523	00012527	0	Phase Limit Flag	Aluminum-6061	No	ADC	7/6/2007					
6	1	4		EA	12523	00012528	0	Phase Limit Flag Spacer	Aluminum-6061	No	ADC	7/6/2007					
7	1	1		EA	12151	00012529	0	Hard Stop Block 1	Steel, Mild	No	ADC	7/6/2007					
7	1	1		EA	12152	00012529	0	Hard Stop Block 1	Steel, Mild	No	ADC	7/6/2007					
8	1	1		EA	12151	00012530	0	Hard Stop Block 2	Steel, Mild	No	ADC	7/6/2007					
8	1	1		EA	12152	00012530	0	Hard Stop Block 2	Steel, Mild	No	ADC	7/6/2007					
9	2	2		EA	12151	00012531	0	Gap Limit Flag	Aluminum-6061	No	ADC	7/6/2007					
9	2	2		EA	12152	00012531	0	Gap Limit Flag	Aluminum-6061	No	ADC	7/6/2007					
14	4	4		EA	12151	00012532	0	Dowel Pin, 1/4" x 1-1/2" SS	Stainless Steel, 304	No	McMaster-Carr 90145A546	7/6/2007					
14	4	4		EA	12152	00012532	0	Dowel Pin, 1/4" x 1-1/2" SS	Stainless Steel, 304	No	McMaster-Carr 90145A546	7/6/2007					
12	2	2		EA	12155	00012533	0	SRC Correction Coil Assembly, Rear		No	ADC	7/6/2007					
22	4	4		EA	12339	00012534	0	SRC Vertical Rail	Various	No	Schneeberger 4MR35-B2-0398-19-19-G0-V3-HS	7/6/2007					
12	1	1		EA	12151	00012535	0	Inclinometer Mount Bracket	Aluminum-6061	No	Customer Supplied	7/6/2007					
12	1	1		EA	12152	00012535	0	Inclinometer Mount Bracket	Aluminum-6061	No	Customer Supplied	7/6/2007					
10	3	3		EA	12151	00012536	0	Encoder Tape Mount Plate	Aluminum-6061	No	ADC	7/6/2007					
10	3	3		EA	12152	00012536	0	Encoder Tape Mount Plate	Aluminum-6061	No	ADC	7/6/2007					
8	2	2		EA	12206	00012538	0	Gap Drive Bearing Housing, SRC	Steel, Mild	No	ADC	8/28/2007					
6	2	2		EA	12516	00012538	0	Gap Drive Bearing Housing, SRC	Steel, Mild	No	ADC	8/28/2007					
9	2	2		EA	12206	00012539	0	Bearing Spacer, Gap Drive	1144 Stress Proof	No	ADC	8/28/2007					
7	2	2		EA	12516	00012539	0	Bearing Spacer, Gap Drive	1144 Stress Proof	No	ADC	8/28/2007					
10	2	2		EA	12206	00012541	0	Bearing Clamp Plate	Steel, Mild	No	ADC	8/28/2007					
8	2	2		EA	12516	00012541	0	Bearing Clamp Plate	Steel, Mild	No	ADC	8/28/2007					
18	1	1		EA	12206	00012543	0	Right Angle Spiral Bevel Gearbox	Various	No	Tandler STD 00 2:1 III (see ADC dwg)	8/28/2007					
17	1	1		EA	12516	00012543	0	Right Angle Spiral Bevel Gearbox	Various	No	Tandler STD 00 2:1 III (see ADC dwg)	8/28/2007					
19	1	1		EA	12206	00012544	0	Precision Right Angle Servo Gearbox LH	Various	No	Rino 35E30CH1F (see ADC dwg)	8/28/2007					
18	1	1		EA	12516	00012544	0	Precision Right Angle Servo Gearbox LH	Various	No	Rino 35E30CH1F (see ADC dwg)	8/28/2007					
20	1	1		EA	12206	00012545	0	Precision Right Angle Servo Gearbox RH	Various	No	Rino 35E30CH2F (see ADC dwg)	8/28/2007					
19	1	1		EA	12516	00012545	0	Precision Right Angle Servo Gearbox RH	Various	No	Rino 35E30CH2F (see ADC dwg)	8/28/2007					
21	1	1		EA	12339	00012546	0	Lift Plate Assembly, SRC	Various	No	Customer Supplied	7/6/2007					
10	2	2		EA	12339	00012549	0	Upper Ball Screw Support Mount Block	Steel, Mild	No	ADC	7/6/2007					
11	2	2		EA	12339	00012550	0	Lower Ball Screw Support Mount Block	Steel, Mild	No	ADC	7/6/2007					
35	24	24		EA	12339	00012551	0	Washer, M12 DIN 125 SS	Stainless Steel, 304		McMaster-Carr 93475A290	7/6/2007					

ADC JOB Bill of Material

PROJECT NUMBER	11-778
SRC EPU 60.0	00012155
PROJECT ENGINEER	A Lyndaker

NUMBER OF ASSEMBLIES:	1
REVISION:	2
REV. DATE:	8/12/2008

DWG ITEM	DWG QTY	JOB QTY	QTY ON HAND	U of M	ASSY #	PART #	REV #	DESCRIPTION	MATERIAL	MOD	VENDOR & VENDOR PART NUMBER	RELEASE DATE	PURCH PART PO#	ORDER DATE & INITIALS	STATUS LAST CHECKED DATE & INITIALS	PLANNED ARRIVAL DATE	HERE & INSP INITIALS
31	32	32		EA	12339	00012552	0	SHCS M16x110 SS	Stainless Steel, 304		McMaster-Carr 91292A253	7/6/2007					
12	2	2		EA	12339	00012553	0	Lift Assembly Spacer Block	Aluminum-6061	No	ADC	7/6/2007					
13	4	4		EA	12339	00012554	0	Standoff, Correction Coil Mount	Stainless Steel, 304	No	ADC	7/6/2007					
3	2	2		EA	12339	00012555	0	Gap Encoder Assembly		No	ADC	7/6/2007					
1	1	2		EA	12555	00012556	0	Gap Encoder Read Head Mount	Stainless Steel, 304	No	ADC	7/6/2007					
2	1	2		EA	12555	00012557	0	Gap Encoder Mount Plate	Aluminum-6061	No	ADC	7/6/2007					
4	2	2		EA	12339	00012558	0	Gap Limit Assembly 1		No	ADC	7/6/2007					
5	2	2		EA	12339	00012559	0	Gap Limit Assembly 2		No	ADC	7/6/2007					
1	1	2		EA	12558	00012560	0	Gap Limit Mount Block	Aluminum-6061	No	ADC	7/6/2007					
1	1	2		EA	12559	00012560	0	Gap Limit Mount Block	Aluminum-6061	No	ADC	7/6/2007					
4	4	8		EA	12558	00012561	0	M3 Male/Female Threaded Hex Standoff	Stainless Steel, 304	No	McMaster-Carr 93655A428	7/6/2007					
4	4	8		EA	12559	00012561	0	M3 Male/Female Threaded Hex Standoff	Stainless Steel, 304	No	McMaster-Carr 93655A428	7/6/2007					
13	1	4		EA	12523	00012562	0	Custom NEMA 23 Brake 10in-lb	Various	No	Inertia Dynamics 89232331	7/6/2007					
5	1	2		EA	12558	00012563	0	1.84" Braked Screw Set	Various	No	New Focus 9302-K	7/6/2007					
5	1	2		EA	12559	00012563	0	1.84" Braked Screw Set	Various	No	New Focus 9302-K	7/6/2007					
2	1	2		EA	12558	00012564	0	Gap Switch Mount Plate	Aluminum-6061	No	ADC	7/6/2007					
2	1	2		EA	12559	00012564	0	Gap Switch Mount Plate	Aluminum-6061	No	ADC	7/6/2007					
3	1	2		EA	12558	00012565	0	Screw Lock Mount Plate	Aluminum-6061	No	ADC	7/6/2007					
3	1	2		EA	12559	00012565	0	Screw Lock Mount Plate	Aluminum-6061	No	ADC	7/6/2007					
14	2	2		EA	12339	00012566	0	Gap Hard Stop Block 1	Steel, Mild	No	ADC	7/6/2007					
15	2	2		EA	12339	00012567	0	Gap Hard Stop Block 2	Steel, Mild	No	ADC	7/6/2007					
18	1	1		EA	12155	00012568	0	Electrical Enclosure Box	Electromate L-W242408LG	Yes	ADC	7/6/2007					
22	1	1		EA	12155	00012569	0	T-Handle Draw Latch	Stainless Steel, 304	No	McMaster-Carr 1344A26	7/6/2007					
1	1	1		EA	12596	00012587	0	SRC Frame Support Box, Lower	Aluminum, M-1 Mold Plate	No	ADC	7/6/2007					
1	1	1		EA	12597	00012588	0	SRC Frame Support Box, Upper	Aluminum, M-1 Mold Plate	No	ADC	7/6/2007					
16	30	30		EA	12339	00012590	0	Washer Block, Support Box	1045 Carbon Steel	No	ADC	7/6/2007					
31	4	4		EA	12206	00012591	0	AN960 5/16" Washer SS	Stainless Steel, 304	No	McMaster-Carr 98017A690	8/28/2007					
6	1	1		EA	12339	00012596	0	SRC Lower Support Box Assembly		No	ADC	7/6/2007					
7	1	1		EA	12339	00012597	0	SRC Upper Support Box Assembly		No	ADC	7/6/2007					
17	2	2		EA	12339	00012598	0	Washer Plate, Upper Support	Steel, Mild	No	ADC	7/6/2007					
18	2	2		EA	12339	00012599	0	Washer Plate, Lower Support	Steel, Mild	No	ADC	7/6/2007					
32	4	4		EA	12339	00012600	0	HHCS M16x50, Black Oxide	Various		McMaster-Carr 91310A842	7/6/2007					
37	4	4		EA	12339	00012601	0	Hex Nut M16, Black Oxide	Various		McMaster-Carr 90685A120	7/6/2007					

ADC JOB Bill of Material

PROJECT NUMBER	11-778
SRC EPU 60.0	00012155
PROJECT ENGINEER	A Lyndaker

NUMBER OF ASSEMBLIES:	1
REVISION:	2
REV. DATE:	8/12/2008

DWG ITEM	DWG QTY	JOB QTY	QTY ON HAND	U of M	ASSY #	PART #	REV #	DESCRIPTION	MATERIAL	MOD	VENDOR & VENDOR PART NUMBER	RELEASE DATE	PURCH PART PO#	ORDER DATE & INITIALS	STATUS LAST CHECKED DATE & INITIALS	PLANNED ARRIVAL DATE	HERE & INSP INITIALS
16	12	12		EA	12151	00012621	0	FHCS M3x10 SS	Stainless Steel, 304	No	McMaster-Carr 92125A130	7/6/2007					
15	12	12		EA	12152	00012621	0	FHCS M3x10 SS	Stainless Steel, 304	No	McMaster-Carr 92125A130	7/6/2007					
22	4	16		EA	12523	00012622	0	SHCS 10-24x3/4 SS	Stainless Steel, 304		McMaster-Carr 92196A245	7/6/2007					
19	4	4		EA	12339	00012623	0	Maximum Gap Shim	Stainless Steel, 440C	No	ADC	7/6/2007					
36	16	16		EA	12339	00012624	0	Small OD Flat Washer M16, Zn Plated	Various	No	Metric & Multistandard 433 16	7/6/2007					
21	2	2		EA	12206	00012650	0	M30x1.5 Precision Locknut	Various	No	INA AM30	8/28/2007					
20	2	2		EA	12516	00012650	0	M30x1.5 Precision Locknut	Various	No	INA AM30	8/28/2007					
13	2	2		EA	12206	00012772	0	Gap Ball Screw Assembly, SRC	Various	No	Steinmeyer (see ADC dwg)	8/28/2007					
12	2	2		EA	12516	00012772	0	Gap Ball Screw Assembly, SRC	Various	No	Steinmeyer (see ADC dwg)	8/28/2007					
22	4	4		EA	12206	00012802	0	Axial Bearing Pair	Various	No	INA ZKLN3062-2Z	8/28/2007					
21	4	4		EA	12516	00012802	0	Axial Bearing Pair	Various	No	INA ZKLN3062-2Z	8/28/2007					
11	1	1		EA	12206	00014236	0	Helical Coupling Modification 1/4" to 14mm	McMaster-Carr 6208K125	Yes	ADC	8/12/2008					
10	1	1		EA	12516	00014236	0	Helical Coupling Modification 1/4" to 14mm	McMaster-Carr 6208K125	Yes	ADC	8/12/2008					
12	1	1		EA	12206	00014237	0	1/4" Shaft Extender	Stainless Steel, 304	No	ADC	8/12/2008					
11	1	1		EA	12516	00014237	0	1/4" Shaft Extender	Stainless Steel, 304	No	ADC	8/12/2008					

Fiducialization Report SRC EPU
Advanced Design Consulting

Overview

The following is a description of the Fiducialization process performed at ADC on the SRC EPU.

Fiducialization

A Kern E2 theodolite (Figure 1) with a model 190 optical micrometer (Figure 9, page 4) is used in the fiducialization of the undulator. Its range of focus allows objects as close as 1.5m to be accurately positioned within the cross-hairs of the optics. The theodolite has a resolution of one arc-sec while that of the optical micrometer is 25 μm.

Figure 1: Kern Theodolite

Crosshair survey targets provided by SRC are mounted on precision dowels are inserted into tooling sockets mounted on top of the ID unit on tall supports as shown in figure 2 below.

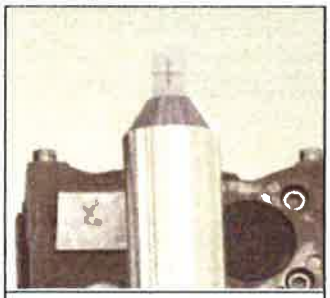

Figure 2: Fiducial target.

. In addition, ADC provides two tooling sockets located in the frame near the vertical (Y) magnetic centerline. These are named F1 on the upstream and F2 on the downstream sides. Usually the targets on the frame are Bull's Eye type targets that can be rotated 90° to provide reference points in all three directions. A photograph of a typical target is shown below in figure 3.

Figure 3: Fiducial target.

The gap is determined using a precisely machined block of G10 glass-filled epoxy (figure 4), 40cm in length and 23.93 mm thick, which is passed cleanly between the magnet arrays. The gap encoders are then reprogrammed for this gap. See figure 4.

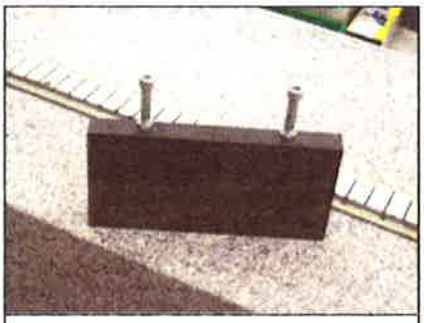

Figure 4: Gap Gauge.

At a gap of 30 mm the 4 corners of the each girder are measured using stick micrometers. This dimension is used for replacement of a gap encoder.

At the horizontal planer phase, where all 4 magnet arrays are at zero degrees phase, the offset of the sub girder to the main girder is measured using a depth gauge. This dimension is used for replacement of a phase encoder.

ADC provides the X offset relative to the horizontal magnetic centerline on the top fiducials and the Y offset of the frame fiducials to the vertical magnetic centerline.

EPU Positioning for Fiducialization

For the fiducialization measurements, the EPU gap was set to 110 mm and the phase was set to 0 (horizontal). The EPU is oriented so that its magnetic centerline runs parallel to the Hall probe bench to within 10 microns across the EPU in both the X and Y axes. This removes pitch and yaw positioning errors.

ADC Hall Probe

ADC uses a hall probe (Figure 5) with 3 orthogonal axes using three FW Bell GH-700 hall sensors with the addition of an on board RTD. The hall probes are each calibrated for magnetic field response using an NMR meter and a constant field dipole magnet as well as mis-alignment due to the assembly process.

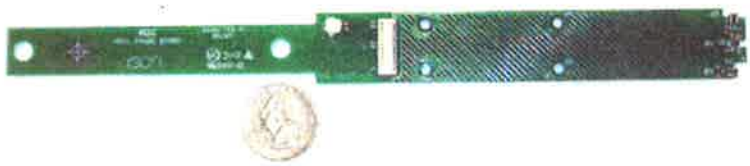

Figure 5: ADC Hall Probe

ADC provides a calibration offset to reference the magnetic centerline to optical features on the probe as described below.

Hall-Probe Offsets

The magnetic center of the hall probe is transferred to a physical point on the probe. This is done by using a magnetic wedge to concentrate a magnetic field. The wedge is mounted in a holder (see figure 6) that is square and parallel to the hall probe bench. Data is taken as the hall probe is scanned in the X direction across the apex of the wedge. The magnet and wedge are then turned sideways and the Y axis is scanned. The magnetic peak is found in the data using a polynomial fit. The peak is referenced to a location in space by the X and Y encoders on the Hall probe carriage. An optical feature is selected on the hall probe and this mark is brought into coincidence with the apex of the wedge and observed with the theodolite. The X and then Y axes are moved until the mark is directly aligned with the apex of the wedge and the differences in the positions at magnetic and physical alignment are recorded.

Figure 6: Wedge

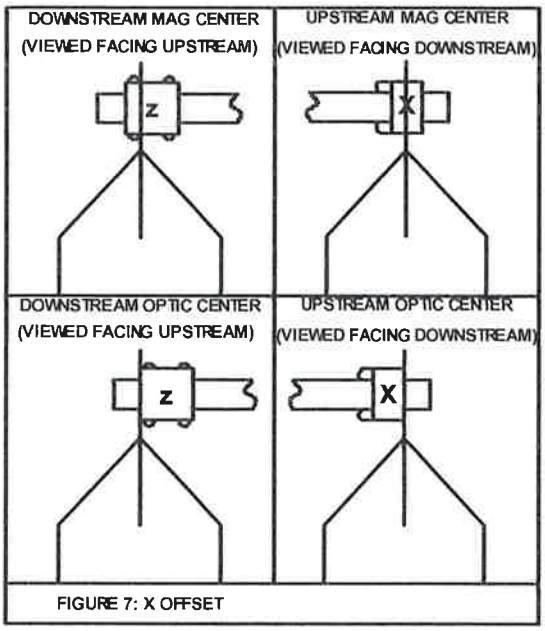

FIGURE 7: X OFFSET

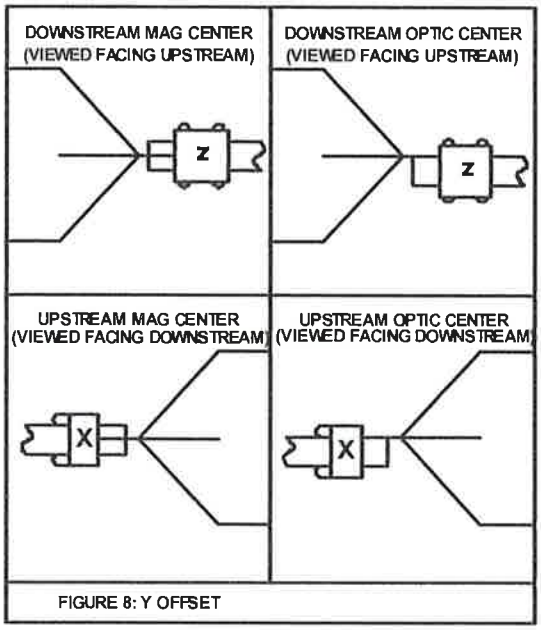

FIGURE 8: Y OFFSET

The probe feature used to align with the magnetic field for X offset is the leading edge of the Z module when looking at the downstream (facing upstream) and the leading edge of the X module when looking at the upstream (facing downstream) (see figure 7). The feature used to align with the magnetic centerline for the Y offset is the top of the circuit board when looking from either direction (See figure 8).

The offsets are as follows. The hall probe is offset by these values to place the feature on the magnetic centerline.

Y offset looking at downstream is +600 um

Y offset looking at the upstream is +240 um

X offset looking at the downstream is -446 um

X offset looking at the upstream is -126 um

X-Coordinates

Figure 9: Optical Micrometer

A moveable vertical string (see figure 10) is mounted on each end of the undulator near the magnetic centerline. The hall probe is positioned so the X feature is on the magnetic center of the machine. The string is adjusted (on each end) using the theodolite until it is in alignment with the X axis mark on the hall probe. The string also allows the theodolite to be quickly brought into alignment with the magnetic centerline of the undulator. Alignment of the theodolite consists of leveling, XY adjustment, and re-leveling. Once the theodolite is in alignment with the strings, the optical micrometer is mounted to the theodelite. The theodolite is swept horizontally and the optical micrometer (see figure 9) is read, providing an offset in the X direction, between the target and the magnetic centerline. The optical micrometer had a travel of +/- .1 inches.

The direction of travel is colored red or black on the optical micrometer. The color of the offset is recorded along with the value.

For horizontal measurements on the downstream end of the EPU (facing upstream), the red is left (-X) and black is right (+X) and for vertical measurements, red is down (-Y) and black is up (+Y).

For measurements on the upstream end of the EPU (facing downstream) red is left (+X) and black is right (-X) and for vertical measurements red is up (+Y) and black is down (-Y).

This procedure is repeated on the other end of the machine.

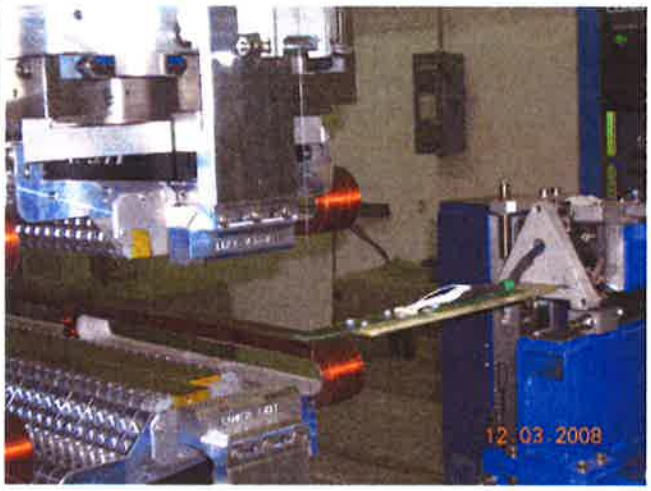

Figure 10: Hall Probe at downstream end of the EPU

Y-Coordinates

The hall probe is positioned so the Y axis feature is at the vertical height of the magnetic center. Then the theodolite is set-up to read 90 degrees at the height of the Y axis mark on the hall probe. The theodolite is swept horizontally to observe fiducials located on the frame (see figure 11). The optical micrometer is rotated 90 degrees on the theodelite and then used to measure the Y offset between the height of the mark and the magnetic centerline and this offset is recorded. This procedure is repeated on the other end of the machine. The frame fiducials are stamped F1 on the upstream and F2 on the downstream.

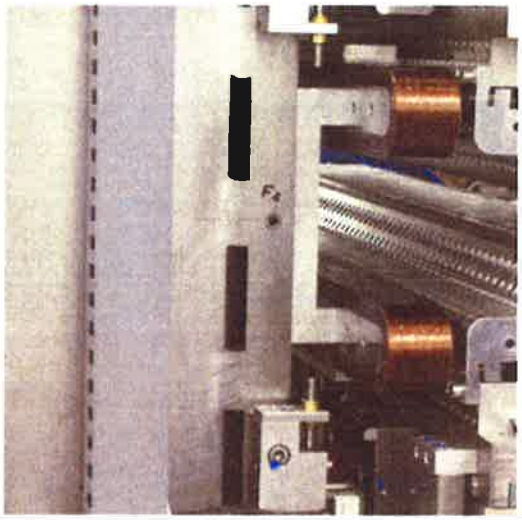

Figure 11 : Frame Fiducial

Z-Coordinates

Z-coordinates can be determined with sufficient accuracy by direct observation of the magnet array. No survey of z-coordinates are made.

Results

The results of the location of the fiducials is presented below

Downstream Y, X = + 600 um

	Home (0,0)	Y Fid F2	Home	Y Fid F2	Home
Vertical	90.00.01	90.00.00	90.00.01	90.00.01	90.00.01
Horizontal	179.15.00	173.00.03	179.14.52	173.03.00	179.14.52
Optical (mils)	R 5.0	R 57.0	R 5.0	R 56.0	R 3.8

Y offset = (Ave F2 - Ave Home) = (56.5 - 4.6) = 51.9 mils below (-Y) magnetic centerline

Downstream X, Y = -446 um

	Home (0,0)	Y Fid F2	Home	Y Fid F2	Home
Vertical	90.00.01	68.53.58	90.00.00	68.53.57	90.00.01
Horizontal	179.14.53	179.14.54	179.14.54	179.14.54	179.14.54
Optical (mils)	0.0	B 27.0	B 0.2	B 27.0	0.0

X offset = (Ave F2 – Ave Home) = (0.1 – 27.0) = 26.9 mils in the +X direction

Upstream Y, X = + 240 um

	Home (0,0)	Y Fid F2	Home	Y Fid F2	Home
Vertical	90.00.01	90.00.00	90.00.01	90.00.00	90.00.00
Horizontal	359.18.18	5.59.55	359.18.18	5.59.47	359.18.18
Optical (mils)	B 5.2	B 46.0	B 5.0	B 47.0	B 6.0

Y offset = (Ave F2 - Ave Home) = (46.5 – 5.4) = 41.1 mils below (-Y) magnetic centerline

Upstream X, Y = -126 um

	Home (0,0)	Y Fid F2	Home	Y Fid F2	Home
Vertical	90.00.01	67.15.03	90.00.00	67.15.04	90.00.00
Horizontal	359.17.55	359.17.56	359.17.55	359.17.55	359.17.55
Optical (mils)	R 15.0	R 55.5	R 14.5	R 54.5	R 14.7

X offset = (Ave F2 – Ave Home) = (55.0 – 14.7) = 40.3 mils in the +X direction

Since we can not measure distance with any accuracy we can not provide an offset height from the magnetic centerline to the top fiducials, however, we can make a guess by measuring a steel ruler at 90 degrees and then again at some other known vertical distance and record the angle. The law of right triangles then gives us the following information.

Downstream

@ 90 degrees, scale = 29.3, @ 290.0 mm the angle is 81.26.36

@ the top fiducial the angle is 67.15.15

The Y offset is estimated at 777.335 mm

Upstream

@ 90 degrees, scale = 11.5, @ 290.0 mm the angle is 80.33.24

@ the top fiducial the angle is 66.37.19

The Y offset is estimated at 778.313 mm