REVISION HISTORY					
REV	DESCRIPTION	DATE	DESIGNER	CHECKED BY	ENGINEER
A	RELEASE PER ECO-004644	11/2016	J TUOZZOLO	CA/CS	C.AMUNDSEN

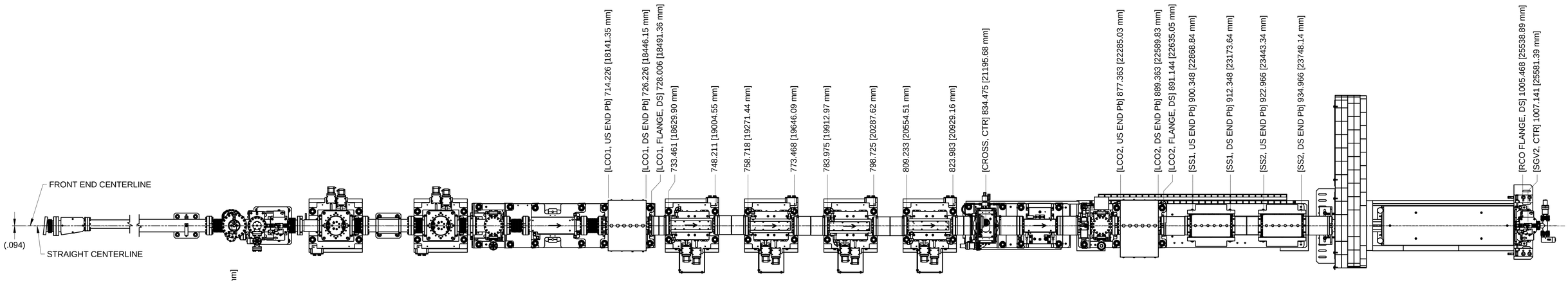

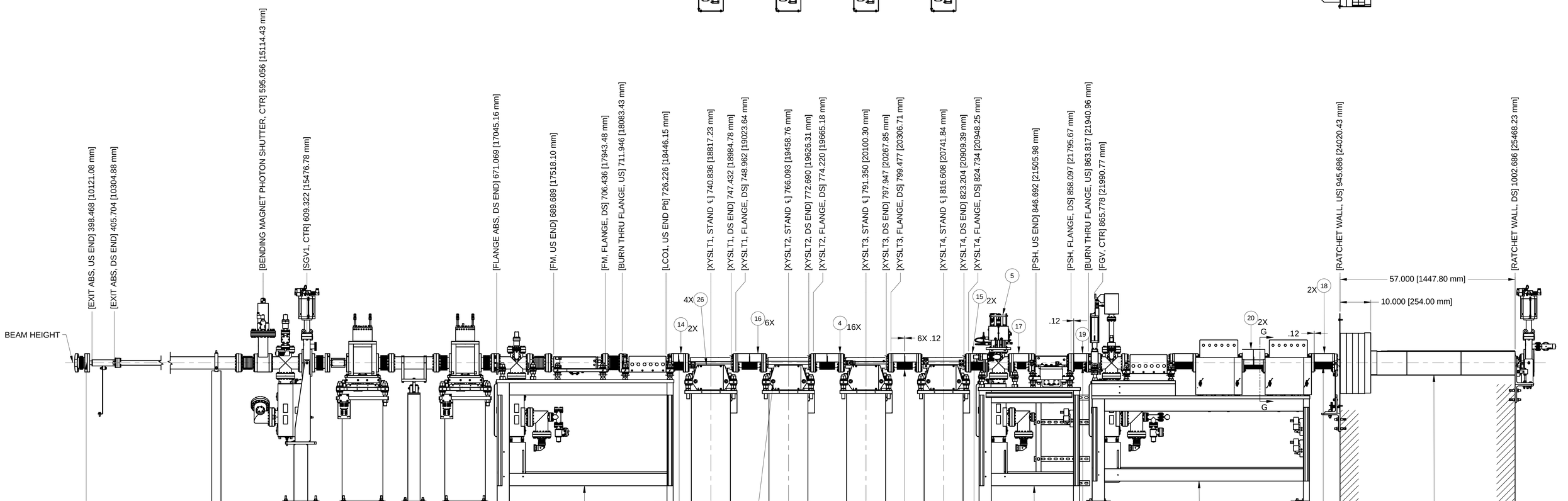

SECTION G-G
SCALE 1 : 8

COMPONENT	RADIATION SAFETY COMPONENT CHECKLIST	TOP OFF SAFETY SYSTEM
EXIT ABSORBER	X	X
FIXED MASK	X	X
BURN THRU FLANGE, LCO1	X	
LEAD COLLIMATOR 1	X	
BURN THRU FLANGE, LCO2	X	
LEAD COLLIMATOR 2	X	X
SAFETY SHUTTER 1	X	
SAFETY SHUTTER 2	X	
RATCHET WALL COLLIMATOR	X	

TOP OFF SAFETY CREDITED COMPONENT OR ASSEMBLY.
ANY CHANGES TO THIS DRAWING REQUIRES APPROVAL
OF THE TECHNICAL AUTHORITY FOR TOP OFF SAFETY.

07-ID BEAMLINE

ITEM	QTY	PART NUMBER	DESCRIPTION	MATERIAL
29	1	SR-DG-XBPM-3100	XBPM DOWNSTREAM ASSEMBLY, FMX/AMX	
28	1	SR-DG-XBPM-3000	XBPM ASSEMBLY UPSTREAM, FMX/AMX	
27	1	SR-VA-CHM-3220	EXIT CHM SUBASSY, S3 (48mm X 25mm)	
26	4	SR-FE-STG-1150	SHIELD, MOTOR	
25	1	SR-FE-SS-3800	SAFETY SHUTTER, ASSY, SRX BEAMLINE	
24	1	SR-FE-SLT-3860	SLIT, ASSY, SRX BEAMLINE	
23	1	SR-FE-SLT-3840	SLIT, ASSY, SRX BEAMLINE	
22	1	SR-FE-SLT-3820	SLIT, ASSY, SRX BEAMLINE	
21	1	SR-FE-SLT-3800	SLIT, ASSY, SRX BEAMLINE	
20	2	SR-FE-SHLD-0002	BELLOWS SHIELD, 3.63" LONG	Aluminum, CORRUGATED
19	1	SR-FE-SHLD-0001-08	BELLOWS SHIELD, 4.70 lg.	Aluminum, CORRUGATED
18	2	SR-FE-SHLD-0001-07	BELLOWS SHIELD, 6.50 lg.	Aluminum, CORRUGATED
17	1	SR-FE-SHLD-0001-06	BELLOWS SHIELD, 5.50 lg	Aluminum, CORRUGATED
16	6	SR-FE-SHLD-0001-04	BELLOWS SHIELD, 4.30 lg.	Aluminum, CORRUGATED
15	2	SR-FE-SHLD-0001-02	BELLOWS SHIELD, 2.50 lg.	Aluminum, CORRUGATED
14	2	SR-FE-SHLD-0001-01	BELLOWS SHIELD, 2.10 lg.	Aluminum, CORRUGATED
13	1	SR-FE-RCO-0700	PLUG SHIELD	
12	1	SR-FE-PSH-3300	PHOTON SHUTTER, ASSY, SRX BEAMLINE	
11	1	SR-FE-MSK-3800	FIXED MASK, ASSY, SST BEAMLINE	
10	1	SR-FE-DRFT-1700	DRIFT PIPE, NON CANTED, SHORT STRAIGHT XBPM, ASSY	
9	1	SR-FE-BLW-0039	WELDED, BELLOWS, 6" CF FLG	
8	3	SR-FE-BLW-0038	WELDED, BELLOWS, 6" CF FLG	
7	2	SR-FE-BLW-0037	WELDED, BELLOWS, 6" CF FLG	
6	1	SR-FE-BLW-0036	WELDED, BELLOWS, 6" CF FLG	
5	1	SR-DG-XRF-2000	ASSY, DUAL SCREEN X-RAY FLAG	
4	16	PI-CLMP-0056	CLAMP, HOSE, WORM DRIVE, S.S, 4.125" - 7"	STAINLESS STEEL TYPE 316L
3	8	ANSI B18.22.1 - 3/8 - wide - Type B	Plain Washer (Inch)Type A and B	Steel, Mild, Zinc Pl
2	8	ANSI B18.21.1 - 0.375	Helical Spring Lock Washers	Steel, Mild, Zinc Pl
1	8	ANSI B18.2.1 - 3/8-16 UNC - 0.75	Hex Cap Screw	Steel, Mild, Zinc Pl

PARTS LIST

NOTES:

1. ALL ORDINATE DIMENSIONS ARE FROM MID-PONT OF INSERTION STRAIGHT.
2. SEE SHEET 2 AND 3 FOR SURVEY AND ALIGNMENT DIMENSIONS.
3. COMPONENT POSITION TOLERANCE OF ` .008 [.200] IN X AND Y DIRECTION AND ` .020 [.500] IN Z DIRECTION (BEAM DIRECTION), UNLESS OTHERWISE NOTED.
4. FRONT END COMPONENTS NOT CENTERED ON STRAIGHT CENTERLINE
5. REFERENCE WATER FLOW DIAGRAM SR-FE-UT-0002, -0003
6. REFERENCE AIR SCHEMATIC SR-FE-UT-0001

UNLESS OTHERWISE SPECIFIED
ALL DIMENSIONS ARE IN INCHES
DIMENSIONS IN BRACKETS [xx.xx] (WHERE PRESENT) ARE MILLIMETERS AND ARE FOR REFERENCE ONLY
INTERPRET DRAWING AS PER ASME Y14.5-1994 OR Y32.2-1975

DIMENSIONAL TOLERANCES	ANGULAR TOLERANCE
X. ` 0.060	` .5~
.X ` 0.030	
.XX ` 0.015	FINISH 125√
.XXX ` 0.005	

BREAK EDGES & DRAW CORNERS 0.005 MIN. TO 0.030 MAX

BROOKHAVEN NATIONAL LABORATORY
BROOKHAVEN NATIONAL LABORATORY
BROOKHAVEN SCIENCE ASSOCIATES
UPTON, NEW YORK 11973
Exploring Life's Mysteries, Protecting its Future

NSLS II NATIONAL SYNCHROTRON LIGHT SOURCE II

DRAWN BY	J TUOZZOLO	1/12/2015
CHECKED BY	CA/CS	11/2016
VACUUM APPROVAL	C HETZEL	11/2016
ENGINEER APPROVAL	C.AMUNDSEN	11/2016
SUPERVISOR APPROVAL	S SHARMA	11/2016
ESH&H APPROVAL	A ACKERMAN	11/2016
QA APPROVAL	E CHESWICK	11/2016

STORAGE RING
FRONT END, LAYOUT
SST Front End

SHEET SIZE	DRAWING/PART NUMBER	REVISION
E	SR-FE-IVU07-1000	A

NEXT ASSY:	FINAL		
PROJECT: NSLS-II	THIRD ANGLE PROJECTION	SCALE: SEE DWG VIEW	WBS# 7.02.05.01
ESH&Q RISK LEVEL	A-1	SHEET 1	OF 3

C:\mech-eng\LT\SR\EIVU07\SR-FE-IVU07-1000.dwx

RELEASED + EFFECTIVE

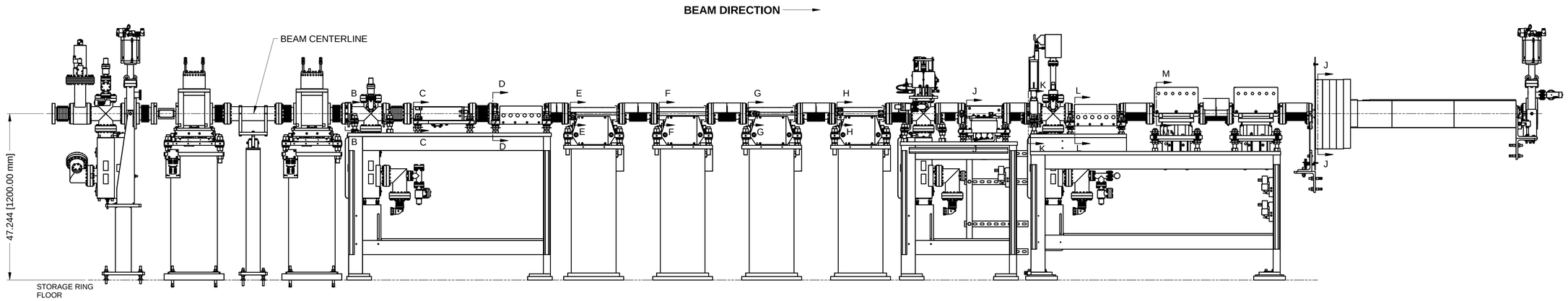

SCALE 1 : 12

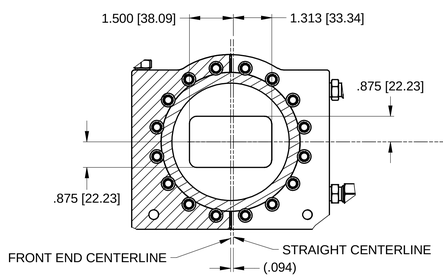

SECTION B-B
SCALE 1 : 2

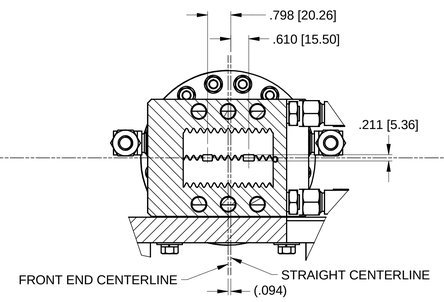

SECTION C-C
(SR-FE-MSK-3801)
SCALE 1 : 2

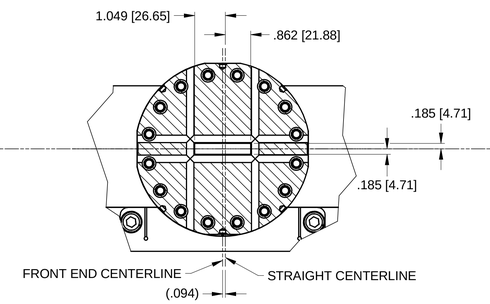

SECTION D-D
(SR-FE-ABS-1520)
SCALE 1 : 2

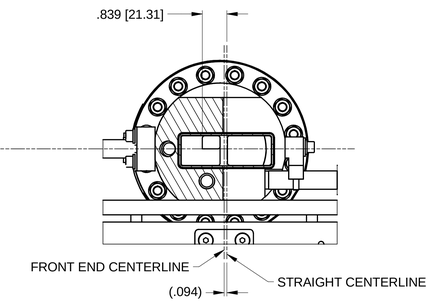

SECTION E-E
SCALE 1 : 2

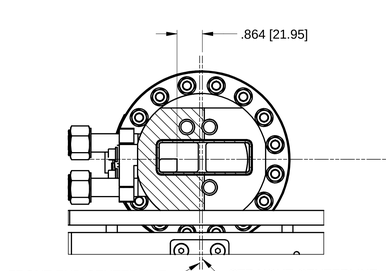

SECTION F-F
SCALE 1 : 2

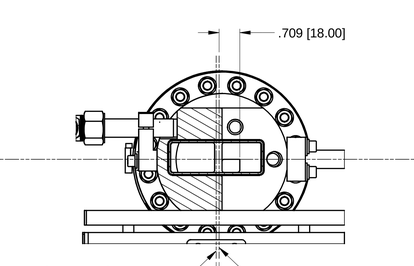

SECTION G-G
SCALE 1 : 2

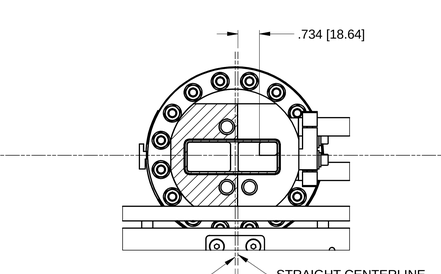

SECTION H-H
SCALE 1 : 2

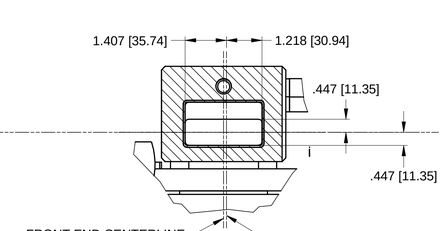

SECTION J-J
IN OPEN POSITION
SCALE 1 : 2

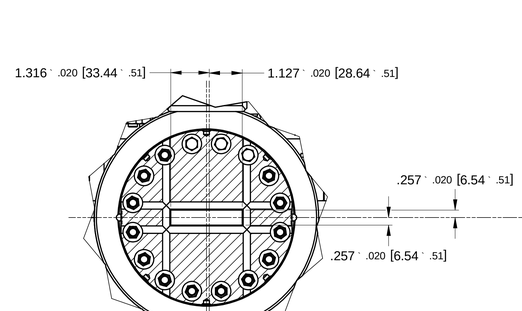

SECTION K-K
(SR-FE-ABS-1540)
SCALE 1 : 2

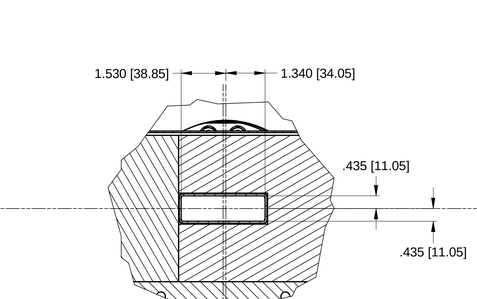

SECTION L-L
SCALE 1 : 2

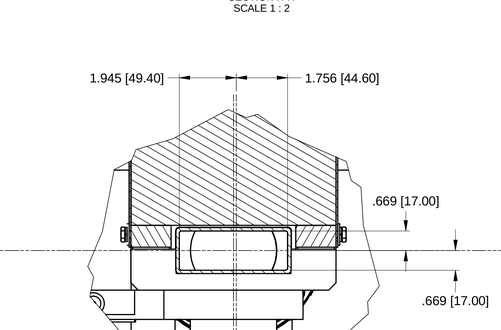

2X
SECTION M-M
IN OPEN POSITION
SCALE 1 : 2

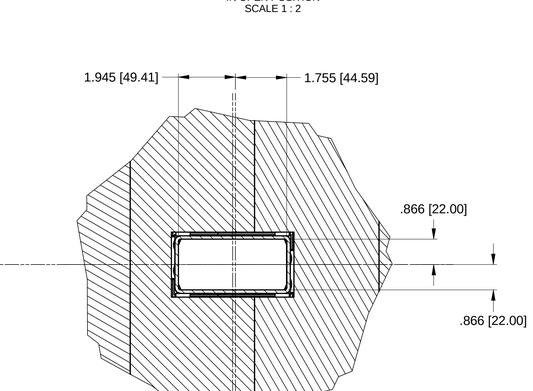

SECTION J-J
SCALE 1 : 2

NOTES:

1. ALL DIMENSIONS FROM STRAIGHT CENTERLINE

E (SHEET SIZE)	SR-FE-IVU07-1000 (DRAWING/PART NUMBER)	A (REVISION)
ESH&Q RISK LEVEL A-1		SHEET 2 OF 3

C:\mech-eng\LTS\SR\FE\IVU07\SR-FE-IVU07-1000.dwg

RELEASED + EFFECTIVE

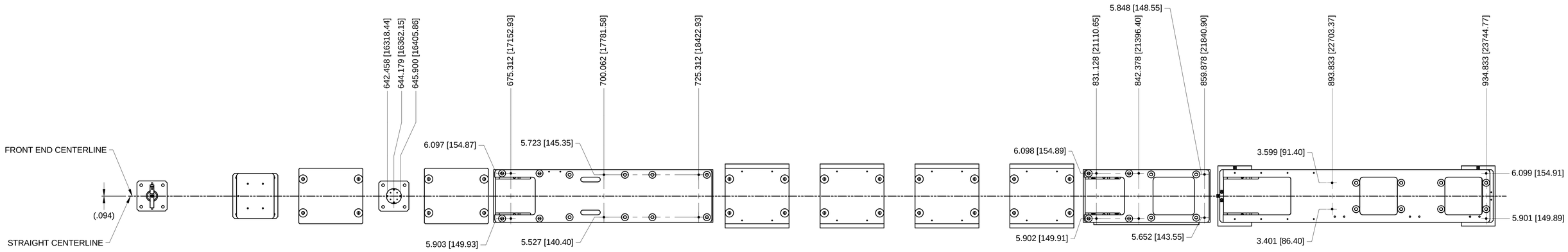

TABLE FIDUCIAL LOCATIONS
SCALE 1 : 10

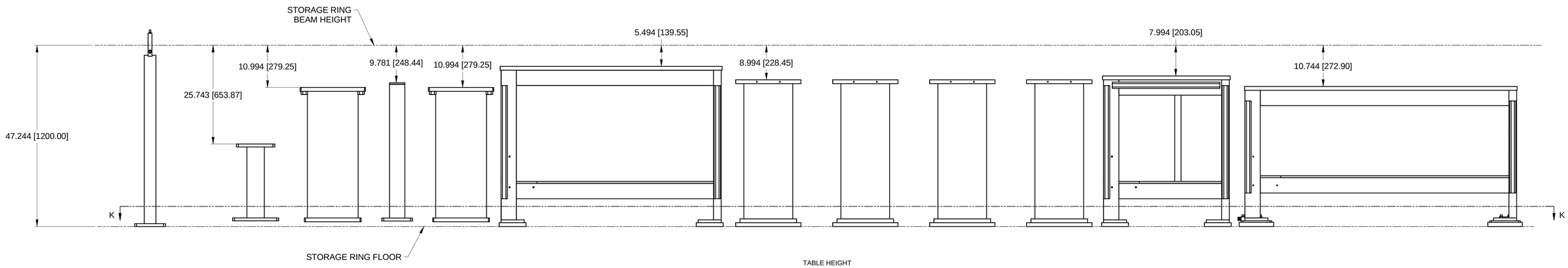

TABLE HEIGHT
SCALE 1 : 10

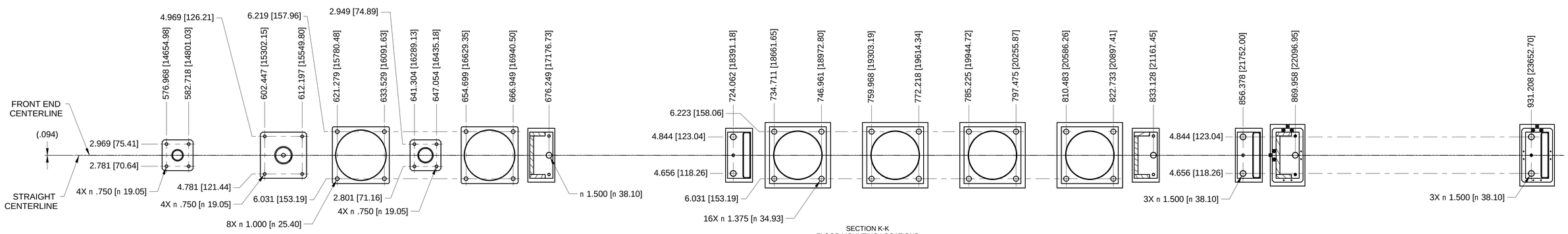

SECTION K-K
FLOOR MOUNTING LOCATIONS
SCALE 1 : 10

NOTES:

1. ALL ORDINATE DIMENSIONS ARE FROM MID-PONT OF INSERTION STRAIGHT.
2. FOR Ø1.375[34.93] HOLES AND Ø1.500[38.100] HOLES USE "3/4" DROP IN ANCHORS P/N PI-HDW-0021.
3. FOR Ø.750[19.050] HOLES AND Ø1.000[25.400] USE "1/2" DROP IN ANCHORS P/N PI-HDW-0040.

E (SHEET SIZE)	SR-FE-IVU07-1000 (DRAWING/PART NUMBER)	A (REVISION)
ESH&Q RISK LEVEL A-1	SHEET 3 OF 3	

C:\mech-eng\LTS\SR\FE\IVU07\SR-FE-IVU07-1000.dwg

RELEASED + EFFECTIVE