NSLS II7-ID SST Beam Line Personal Protection System Certification Validation Check List
G. Ganetis 1/31/18

Beam Line __7-ID_SST_____

The following check list represents the documents and tasks that summarize the review the evaluator has done for a NSLS II Beam Line Personal Protection System:

Document or Task	**Documents Reviewed**	**Checked**	**Comments**
Beam Line Logic Diagram	LT-EL-BL-EI-PPS-1070-96_REV-A.pdf		
Front End Logic Diagram	LT-EL-BL-EI-PPS-0101-92_REV-G.pdf		
Beam Line Logic Diagram reviewed by PS Radiation Safety Committee (Sub Committee)	logic_7id_28id_2018_final.pdf		
Electrical Schematics Auxiliary Enclosure First Optical Enclosure Water Flow Trip Amplifiers Front End –Network/ System Front End-SR 7 I/O Box	 LT-EL-BL-EI-PPS-1070-90_REV-A.pdf LT-EL-BL-EI-PPS-1070-91_REV-A.pdf LT-EL-BL-EI-PPS-1070-92_REV-A.pdf LT-EL-BL-EI-PPS-0101-90 _REV-B.pdf LT-EL-BL-EI-PPS-0101-91_REV-B.pdf LT-EL-SR-EI-PPS-0207-90 _REV-E.pdf		 - - - (A Chain) (B Chain) -
Certification Test Procedure . ID 7 PPS Rad Interlock Cert Check List Addendum for PPS Aperture	Beamline Radiological Interlock Test NSLSII-NSLSII-ESH-PRC-001.pdf NSLS-II Beamline 7-ID Radiological Interlock Test 1.06.2018.pdf Addendum to 7-ID Radiological Interlock Test 1.30.2018.pdf		Procedure Check List Final test of PPS Aperture
Beam Line Tour & Secure Demonstration	Not Used for IRRs		
Mechanical Inspection reports for Beam line Hutch Doors	Door Report 7_ID.pdf		
Design Description for Beam Lines and Front End PPS	PS-C-XFD-SPC-PPS-001		(Copies available upon request)
Maintenance Procedures	PS-C-XFD-PRC-023		(Copies available upon request)
Network Isolation Test Procedure	PS-C-XFD-PRC-022		(Copies available upon request)

NSLS II7-ID SST Beam Line Personal Protection System Certification Validation Check List
G. Ganetis 1/31/18

PPS Equipment Layout Drawing	LT-EL-BL-EI-HCH-1070-REV-A.pdf		
ECNs required during Certification using Small Change Procedure	None		
Deviation Reports on Installed system	None		
Configuration Control 7-ID Chain A PPS Front End P5 Program Stored 7-ID Chain B PPS Front End P5 Program Stored 7-ID Chain A PPS Beamline Program Stored 7-ID Chain B PPS Beamline Program Stored	 LT-EL-BL-EI-PPS-0101-72_REV-G.pdf LT-EL-BL-EI-PPS-0101-81_REV-G.pdf LT-EL-BL-EI-PPS-1070-70_REV-A.pdf LT-EL-BL-EI-PPS-1070-71_REV-A.pdf		This section contains the new system storing the PLC program in the Electrical Design room

Evaluator _____ _____ Date _____
Print Name Signature

REV	DESCRIPTION	DATE	BY	CHECKED	APP
A	INITIAL RELEASE	01/24/2018	SEJ	JM	SB

7-ID FOE SEARCH LOGIC

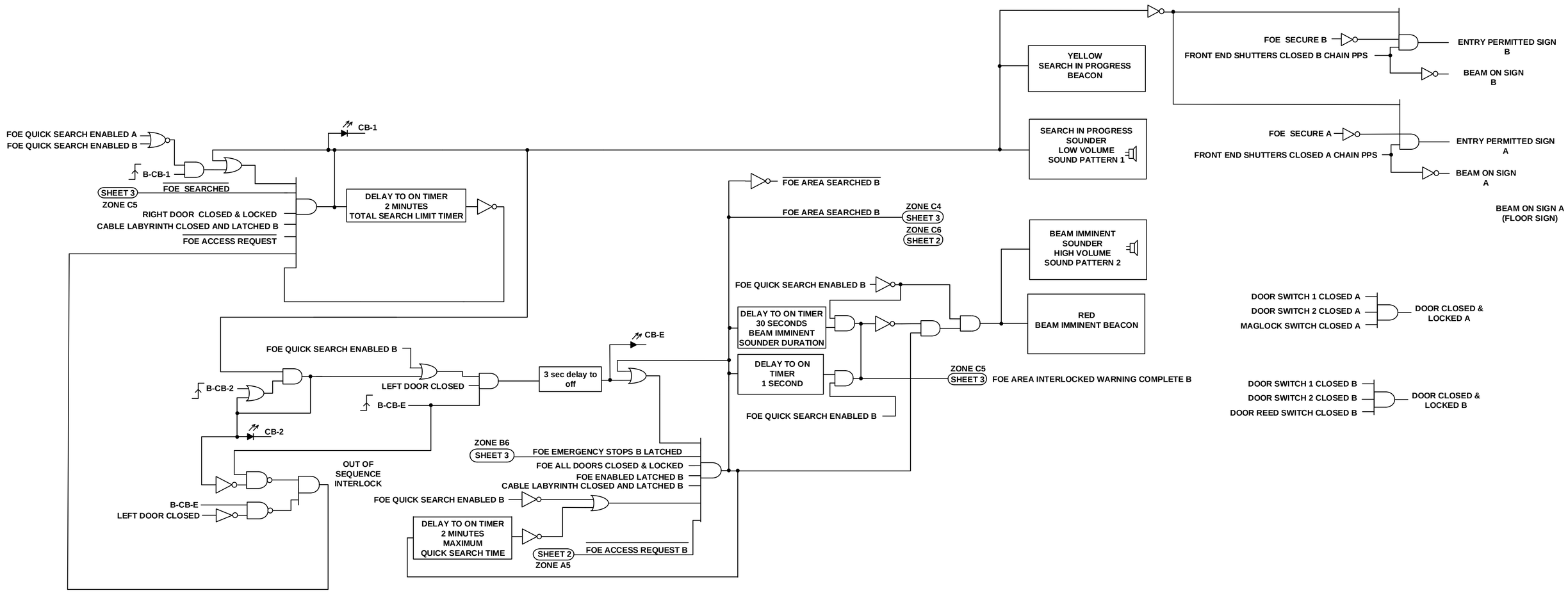

BROOKHAVEN NATIONAL LABORATORY

BROOKHAVEN NATIONAL LABORATORY
BROOKHAVEN SCIENCE ASSOCIATES
UPTON, NEW YORK 11973
Exploring Life's Mysteries, Protecting its Future

NSLSII NATIONAL SYNCHROTRON LIGHT SOURCE II

UNLESS OTHERWISE SPECIFIED
INTEGER TOLERANCES ± .06
DECIMAL TOLERANCES
.X ± .030
.XX ± .015
.XXX ± .010
ANGULAR TOLERANCE ± 0.5°
UNSPECIFIED RADII .02 MAX
125 BREAK SHARP CORNERS AND EDGES
FINISH MAX .03 MIN .005

UNLESS OTHERWISE SPECIFIED DIMENSIONS ARE IN INCHES DIMENSIONS IN [*.**] ARE MILLIMETERS EQUIV. FOR REF. ONLY

ESH&Q RISK LEVEL A-1

INTERPRET DRAWING AS PER ANSI Y14.5 OR Y32.2

		DATE	OUTSTANDING ECN'S
DRWN BY	S. JARZABKOWSKI	1/24/2018	
CHK BY	J.MALLEY	1/26/2018	
ENG APP	S. BUDA	1/25/2018	
SUPV APP	G. GANETIS	1/26/2018	
QA APP	E.CHESWICK	1/25/2018	
ESH APP	R. LEE	1/25/2018	

WIRING DIAGRAM,
7-ID PPS FOE SEARCH LOGIC

LT-EL-BL-EI (DRAWING DIRECTORY) | LT-EL-BL-EI-PPS-1070-96 (DRAWING NUMBER) | A (REV)

COMPUTER REPRODUCABLE | SCALE: N/A | SHEET 1 OF 19

JOB NUMBER | USED ON DWG. NO.

LT-EL-BL-EI-PPS-1070-96

REV	DESCRIPTION	DATE	BY	CHECKED	APP
	SEE SHEET 1				

7-ID FOE A CHAIN LOGIC

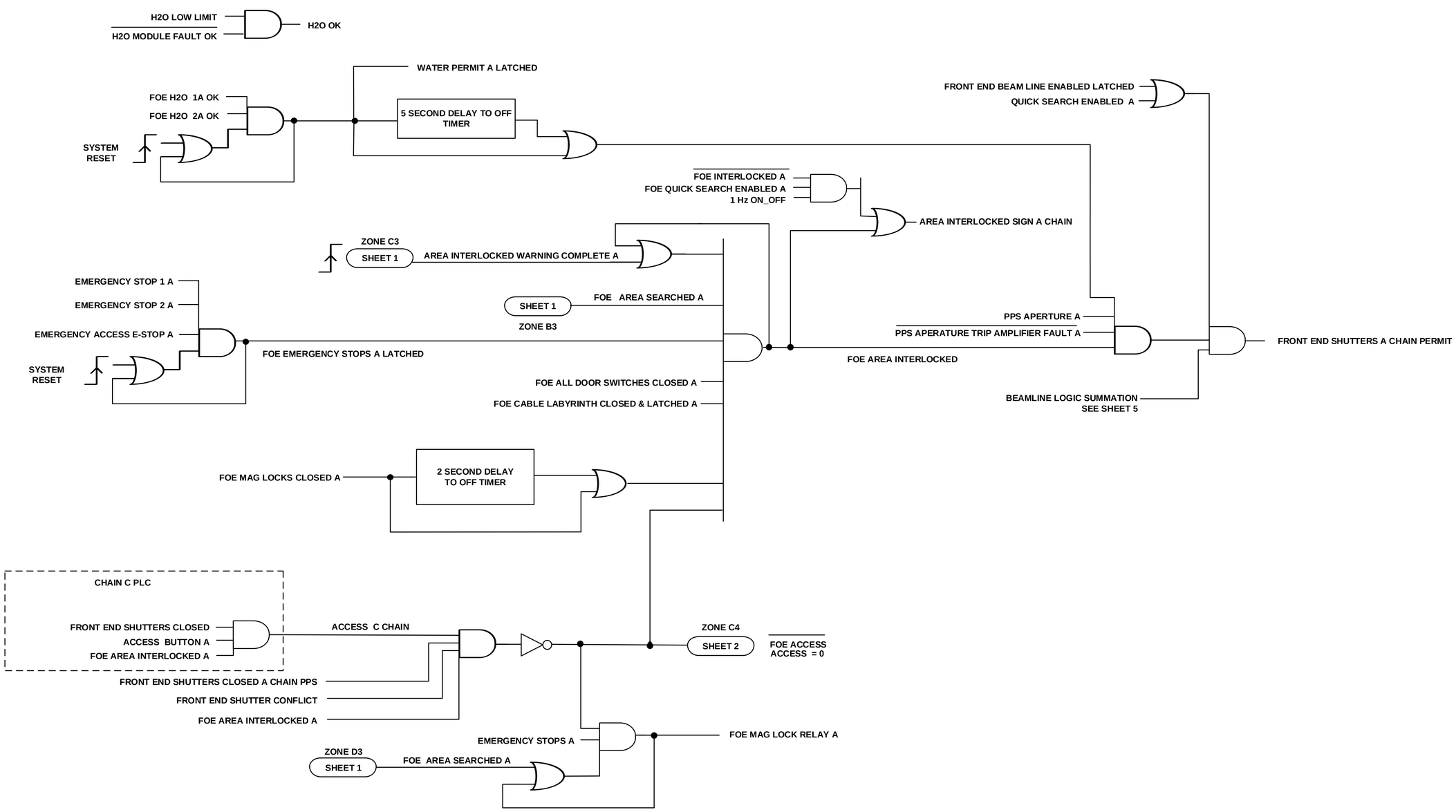

A

LT-EL-BL-EI (DRAWING DIRECTORY)	LT-EL-BL-EI-PPS-1070-96 (DRAWING NUMBER)	A (REV)
COMPUTER REPRODUCABLE	SCALE: N/A	SHEET 2 OF 19

LT-EL-BL-EI-PPS-1070-96

REV	DESCRIPTION	DATE	BY	CHECKED	APP
	SEE SHEET 1				

7-ID FOE B CHAIN LOGIC

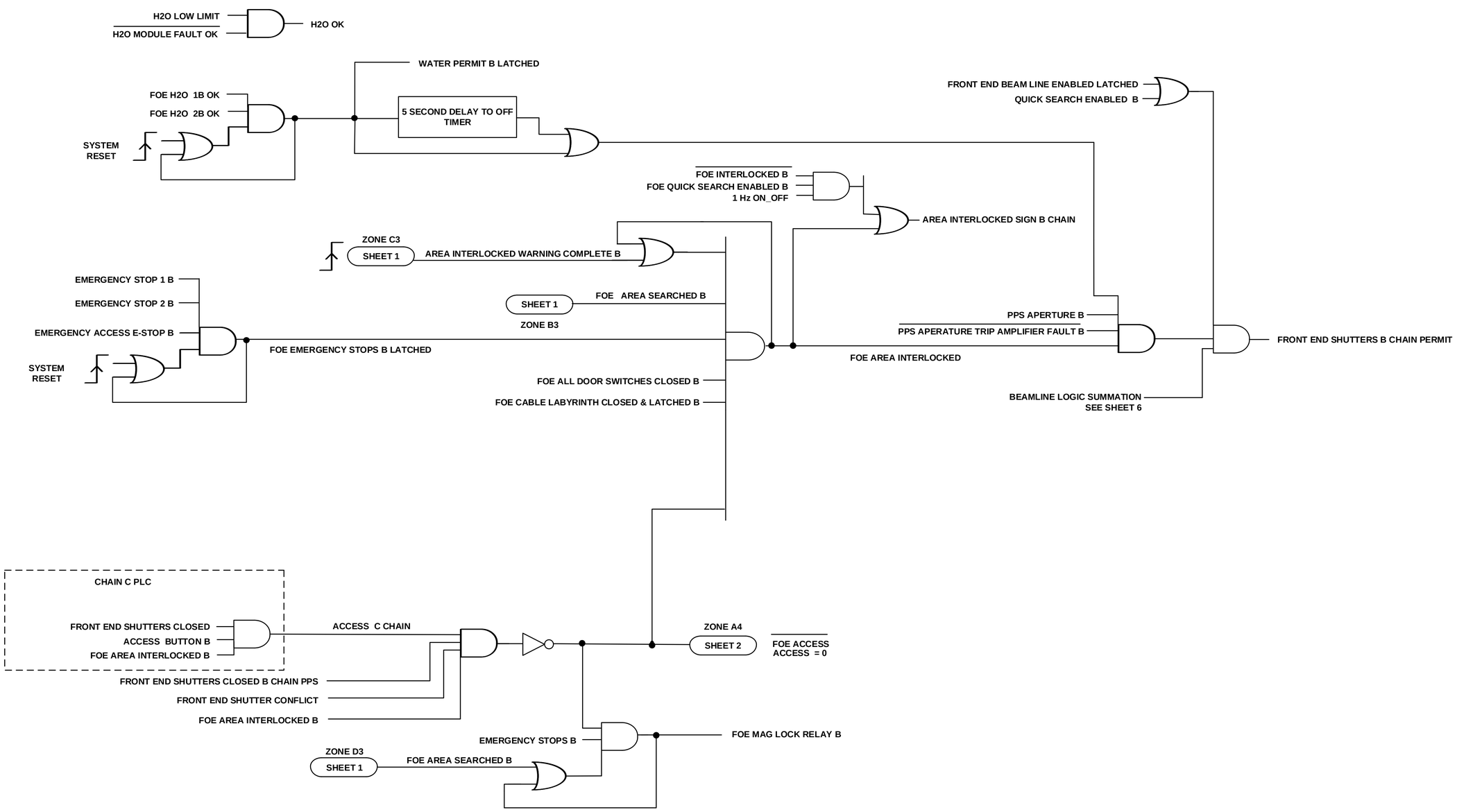

B

LT-EL-BL-EI (DRAWING DIRECTORY)	LT-EL-BL-EI-PPS-1070-96 (DRAWING NUMBER)	A (REV)
COMPUTER REPRODUCABLE	SCALE: N/A	SHEET 3 OF 19

LT-EL-BL-EI-PPS-1070-96

REV	DESCRIPTION	DATE	BY	CHECKED	APP
	SEE SHEET 1				

7-ID FOE BEAMLINE PPS COMPONENT LAYOUT

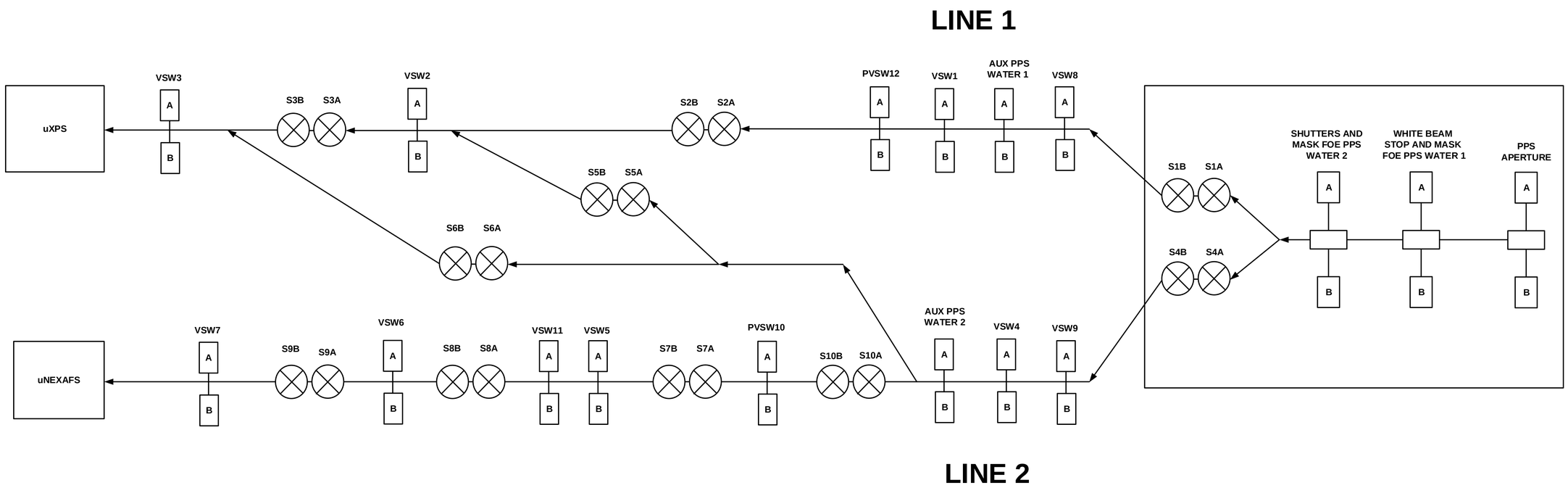

LT-EL-BL-EI (DRAWING DIRECTORY)	LT-EL-BL-EI-PPS-1070-96 (DRAWING NUMBER)	A (REV)
COMPUTER REPRODUCABLE	SCALE: N/A	SHEET 4 OF 19

LT-EL-BL-EI-PPS-1070-96

REV	DESCRIPTION	DATE	BY	CHECKED	APP
	SEE SHEET 1				

7-ID FOE A CHAIN LOGIC
(FRONT END SHUTTER PERMIT)

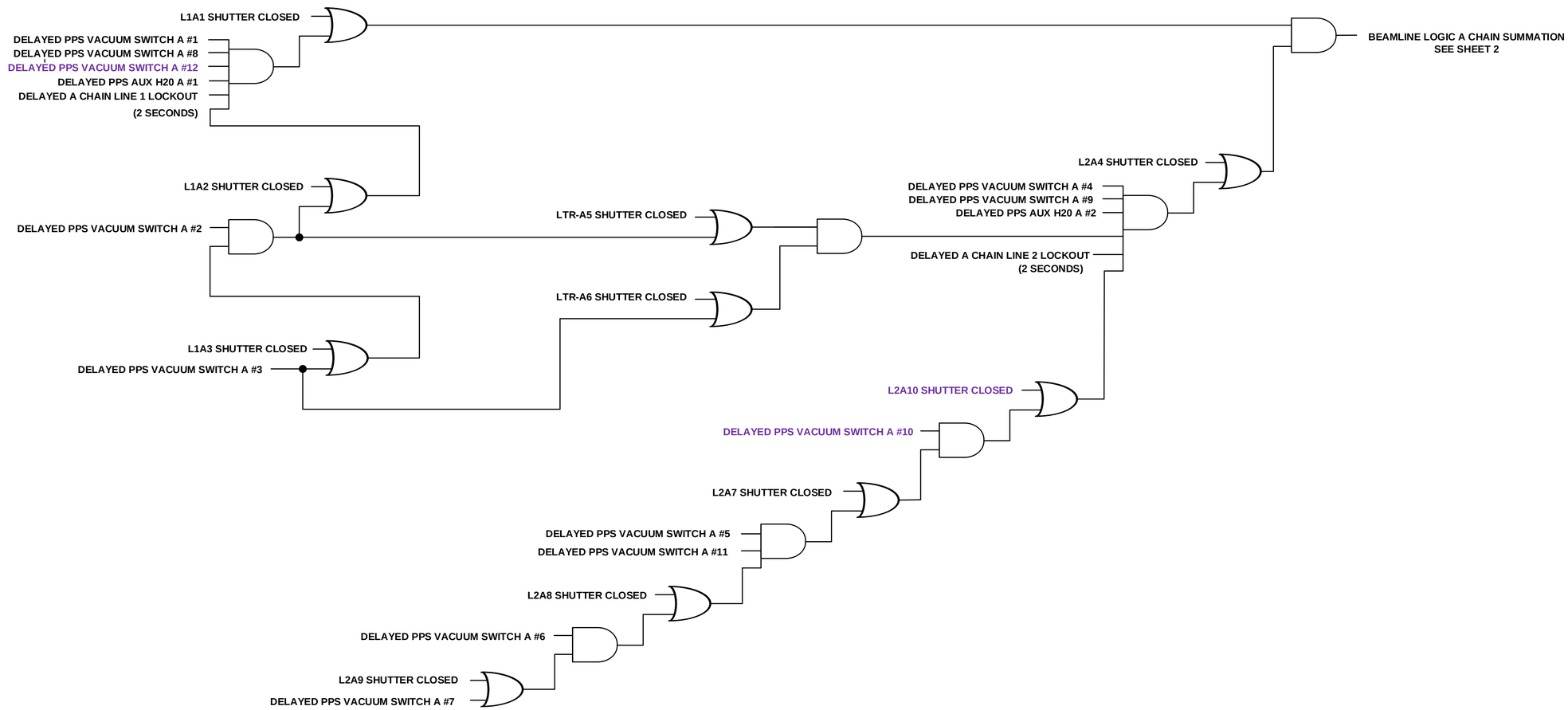

FUTURE COMPONENTS

A

LT-EL-BL-EI (DRAWING DIRECTORY)	LT-EL-BL-EI-PPS-1070-96 (DRAWING NUMBER)	A (REV)
COMPUTER REPRODUCABLE	SCALE: N/A	SHEET 5 OF 19

LT-EL-BL-EI-PPS-1070-96

REV	DESCRIPTION	DATE	BY	CHECKED	APP
	SEE SHEET 1				

7-ID FOE B CHAIN LOGIC
(FRONT END SHUTTER PERMIT)

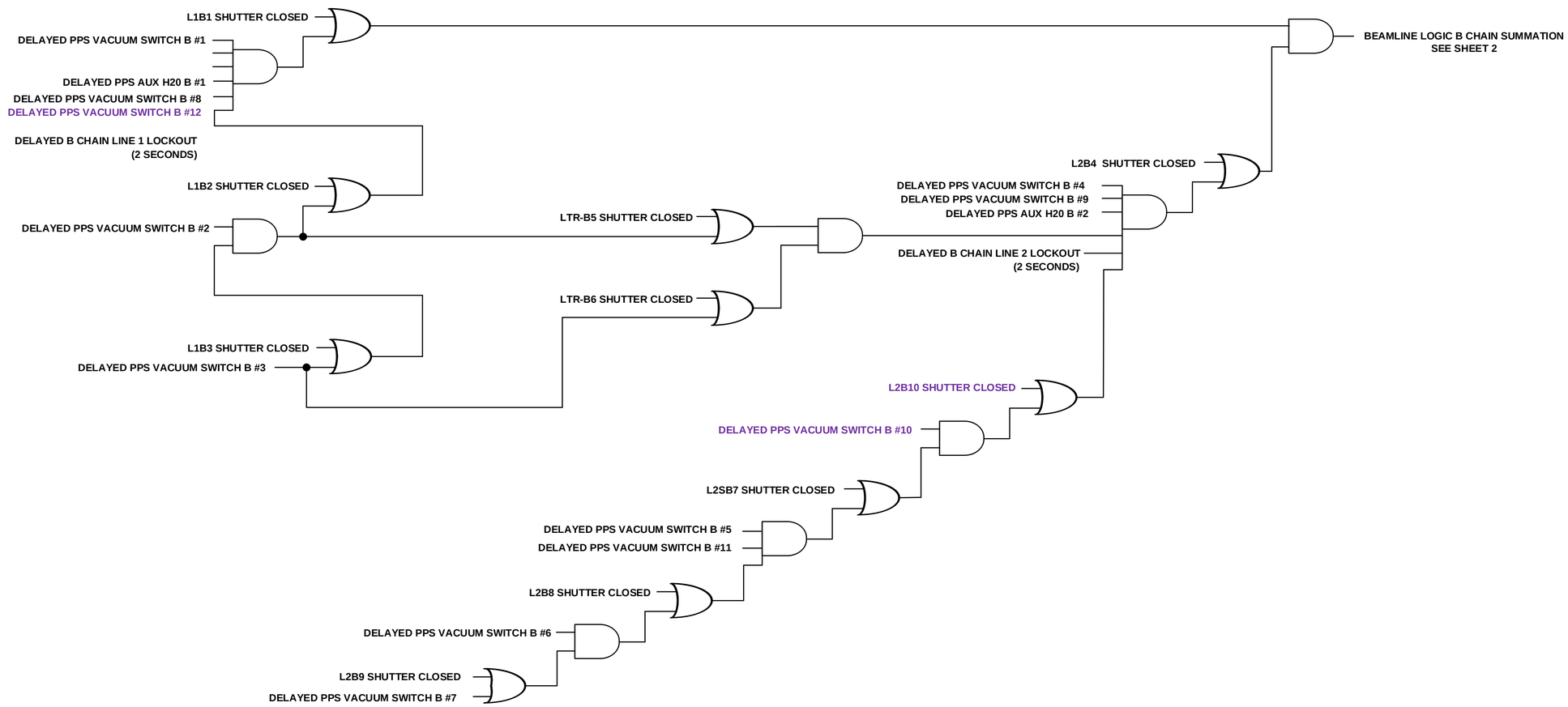

FUTURE COMPONENTS

B

LT-EL-BL-EI (DRAWING DIRECTORY)	LT-EL-BL-EI-PPS-1070-96 (DRAWING NUMBER)	A (REV)
COMPUTER REPRODUCABLE	SCALE: N/A	SHEET 6 OF 19

LT-EL-BL-EI-PPS-1070-96

REV	DESCRIPTION	DATE	BY	CHECKED	APP
	SEE SHEET 1				

7-ID A CHAIN LOGIC
Photon Shutter Permits

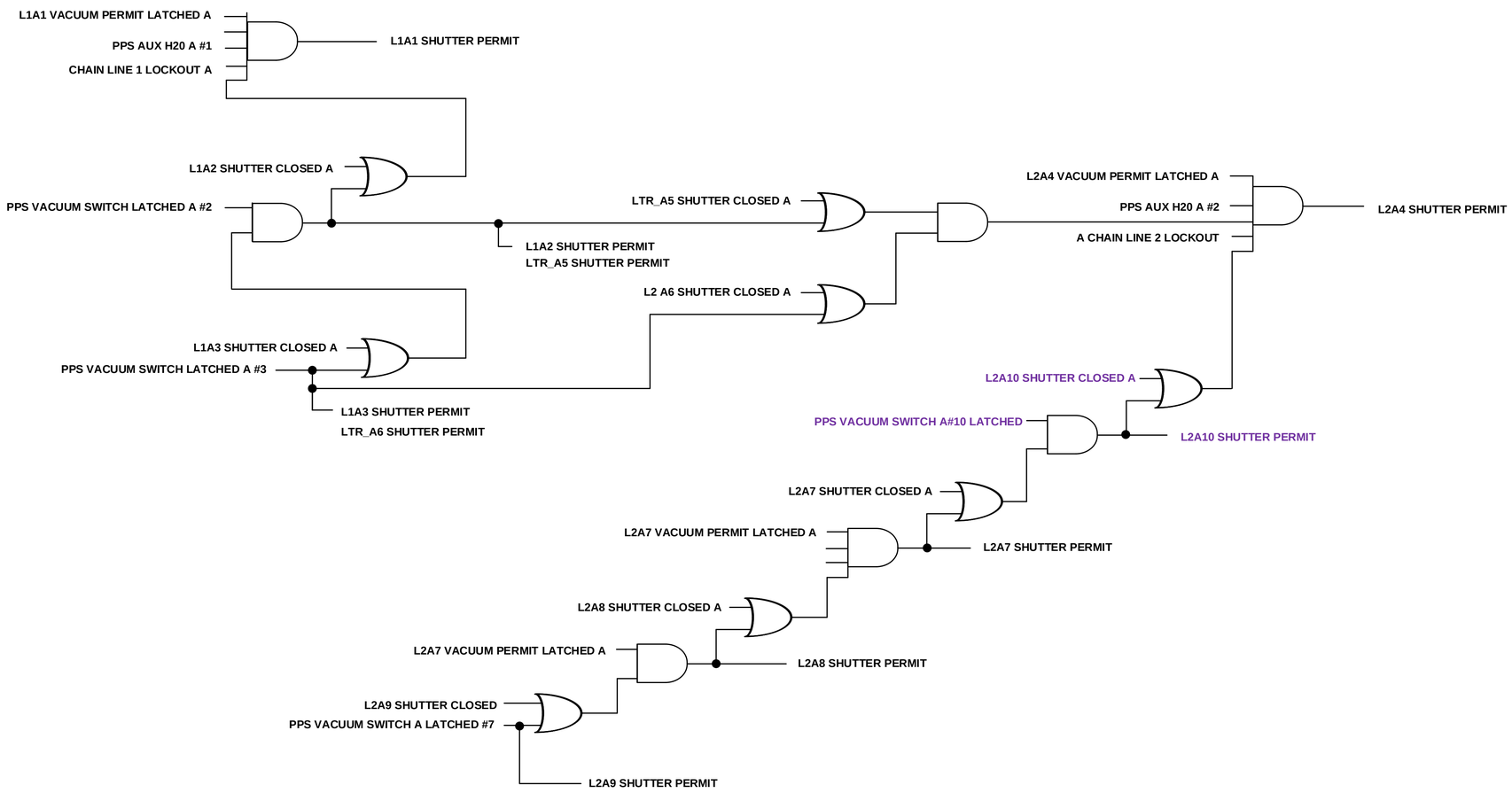

FUTURE COMPONENTS

A

LT-EL-BL-EI (DRAWING DIRECTORY)	LT-EL-BL-EI-PPS-1070-96 (DRAWING NUMBER)	A (REV)
COMPUTER REPRODUCABLE	SCALE: N/A	SHEET 7 OF 19

LT-EL-BL-EI-PPS-1070-96

REV	DESCRIPTION	DATE	BY	CHECKED	APP
	SEE SHEET 1				

7-ID B CHAIN LOGIC
Photon Shutter Permits

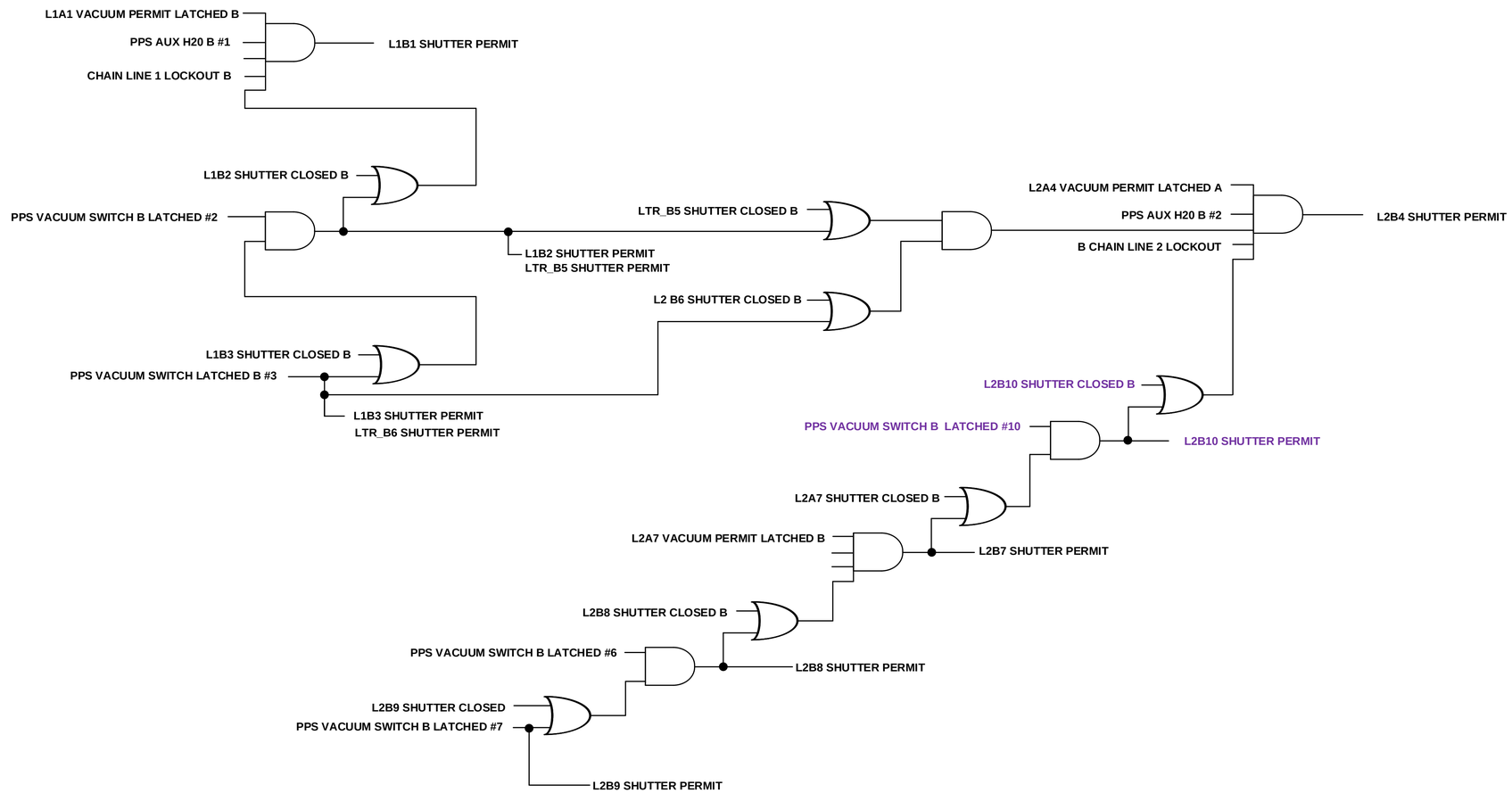

FUTURE COMPONENTS

B

LT-EL-BL-EI-PPS-1070-96

LT-EL-BL-EI (DRAWING DIRECTORY)	LT-EL-BL-EI-PPS-1070-96 (DRAWING NUMBER)	A (REV)
COMPUTER REPRODUCABLE	SCALE: N/A	SHEET 8 OF 19

REV	DESCRIPTION	DATE	BY	CHECKED	APP
	SEE SHEET 1				

7-ID FOE

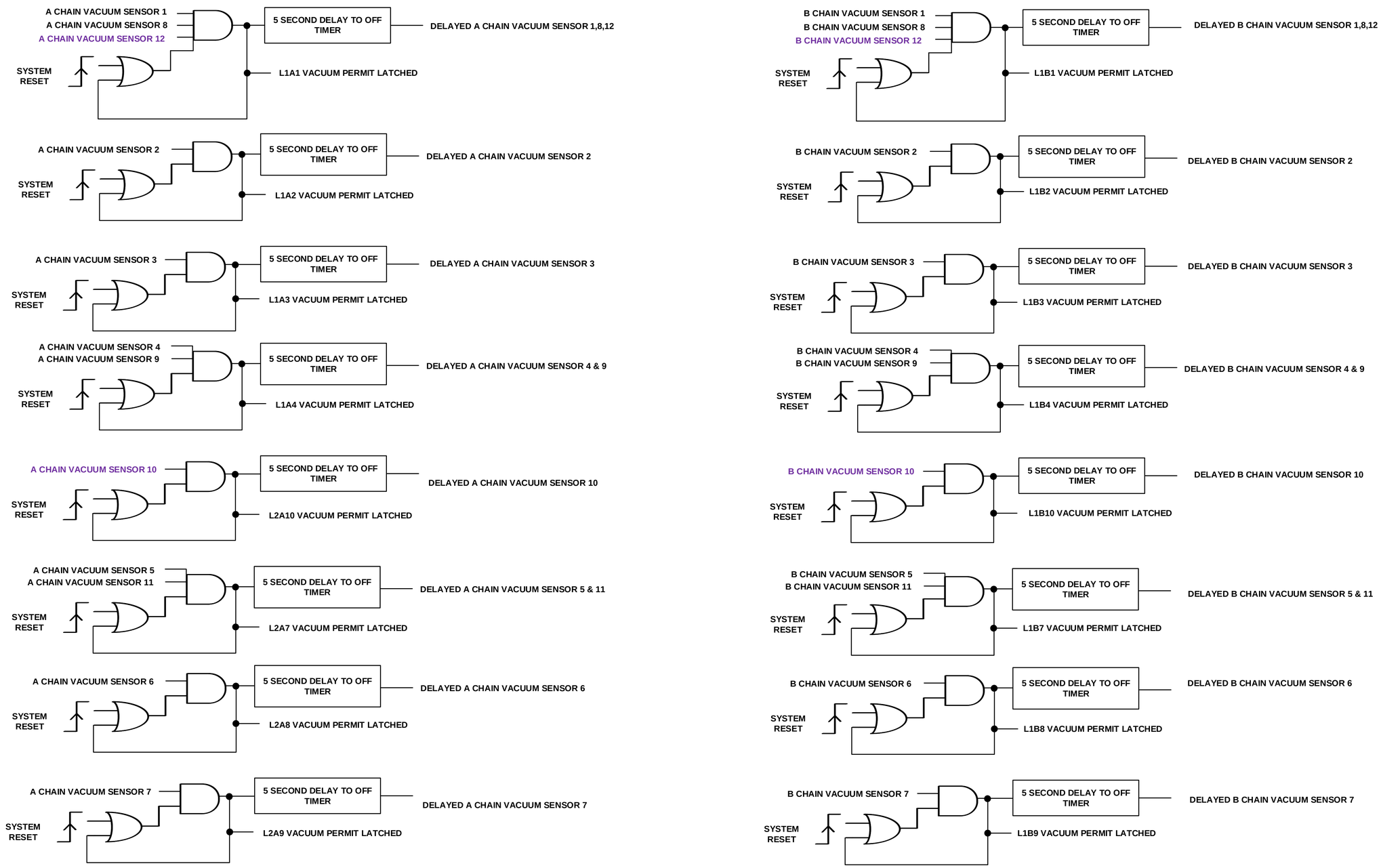

FUTURE COMPONENTS

LT-EL-BL-EI-PPS-1070-96

LT-EL-BL-EI (DRAWING DIRECTORY)	LT-EL-BL-EI-PPS-1070-96 (DRAWING NUMBER)	A (REV)
COMPUTER REPRODUCABLE	SCALE: N/A	SHEET 9 OF 19

REV	DESCRIPTION	DATE	BY	CHECKED	APP
	SEE SHEET 1				

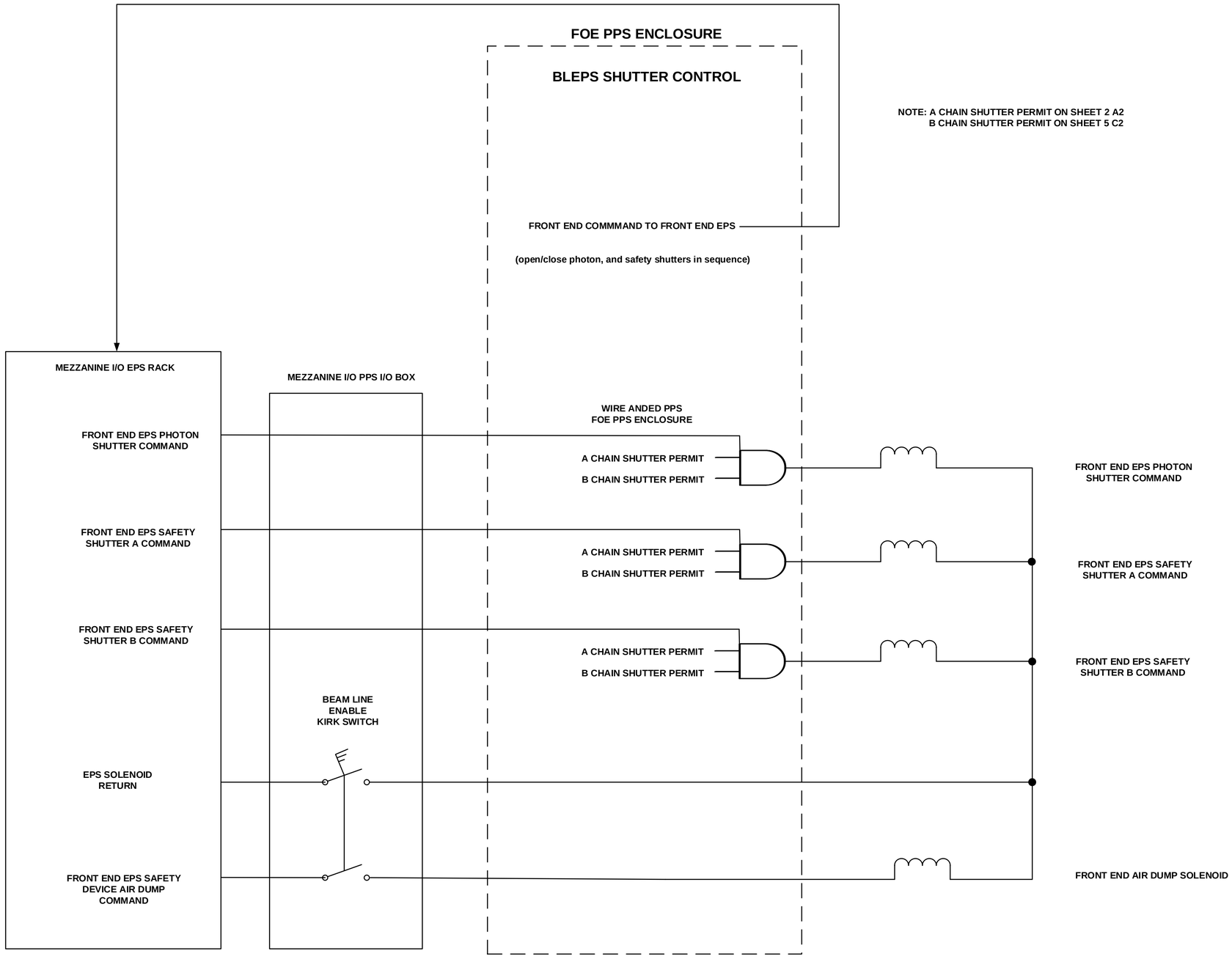

A

LT-EL-BL-EI (DRAWING DIRECTORY)	LT-EL-BL-EI-PPS-1070-96 (DRAWING NUMBER)	A (REV)
COMPUTER REPRODUCABLE	SCALE: N/A	SHEET 10 OF 19

LT-EL-BL-EI-PPS-1070-96

REV	DESCRIPTION	DATE	BY	CHECKED	APP
	SEE SHEET 1				

C CHAIN SHUTTER CONTROL
FRONT END SHUTTERS

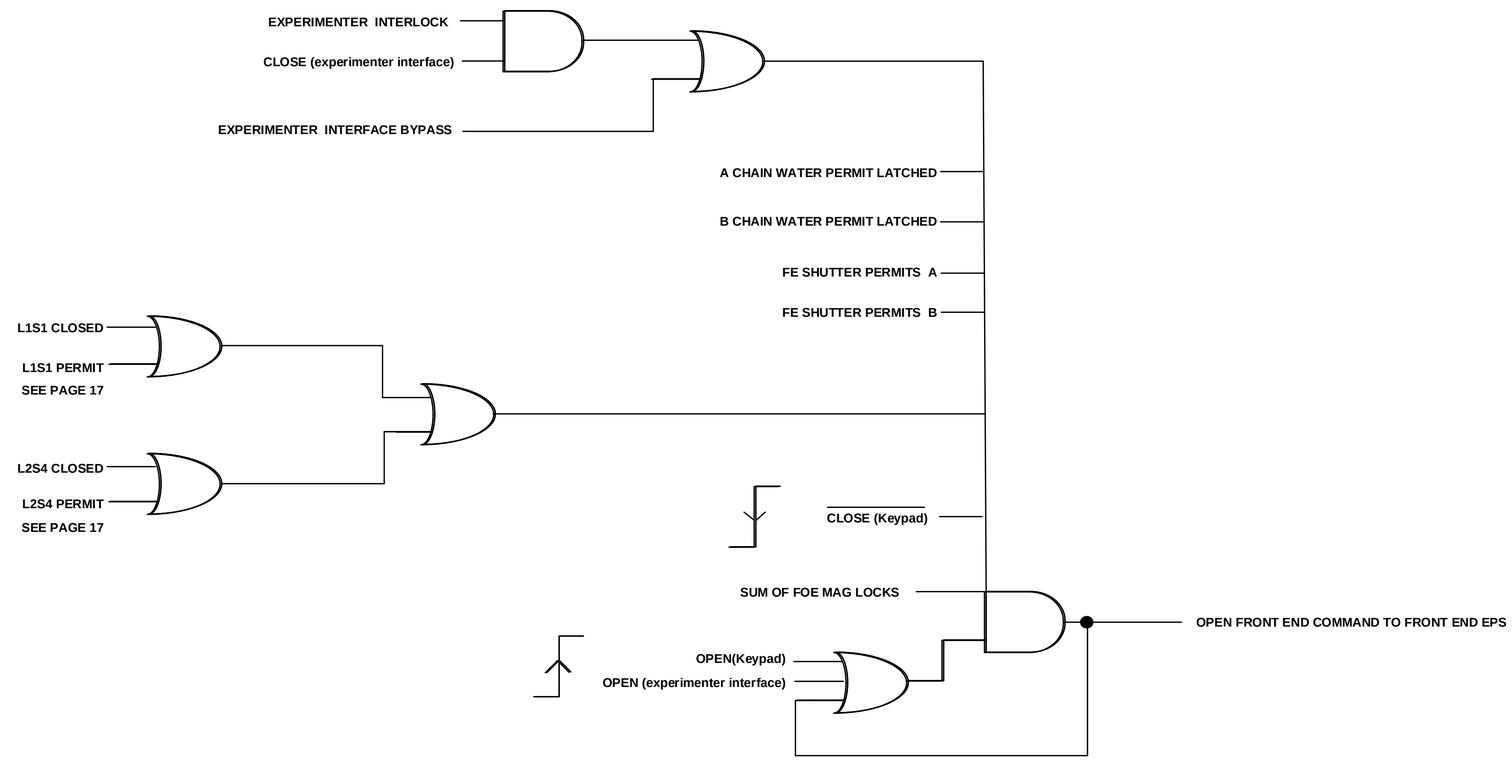

LT-EL-BL-EI-PPS-1070-96

LT-EL-BL-EI (DRAWING DIRECTORY)	LT-EL-BL-EI-PPS-1070-96 (DRAWING NUMBER)	A (REV)
COMPUTER REPRODUCABLE	SCALE: N/A	SHEET 11 OF 19

REV	DESCRIPTION	DATE	BY	CHECKED	APP
	SEE SHEET 1				

C CHAIN SHUTTER CONTROL

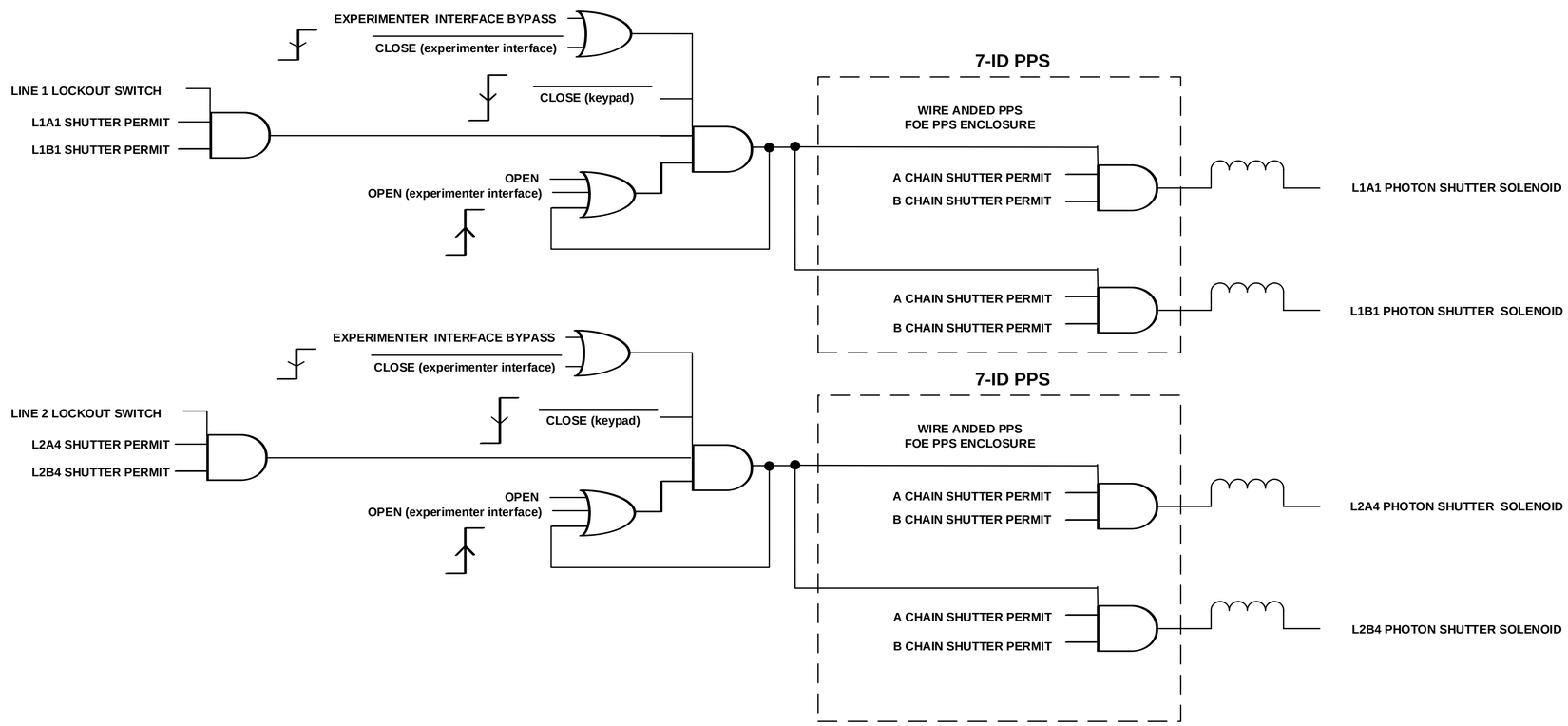

EPS

LT-EL-BL-EI (DRAWING DIRECTORY)	LT-EL-BL-EI-PPS-1070-96 (DRAWING NUMBER)	A (REV)
COMPUTER REPRODUCABLE	SCALE: N/A	SHEET 12 OF 19

LT-EL-BL-EI-PPS-1070-96

REV	DESCRIPTION	DATE	BY	CHECKED	APP
	SEE SHEET 1				

C CHAIN SHUTTER CONTROL

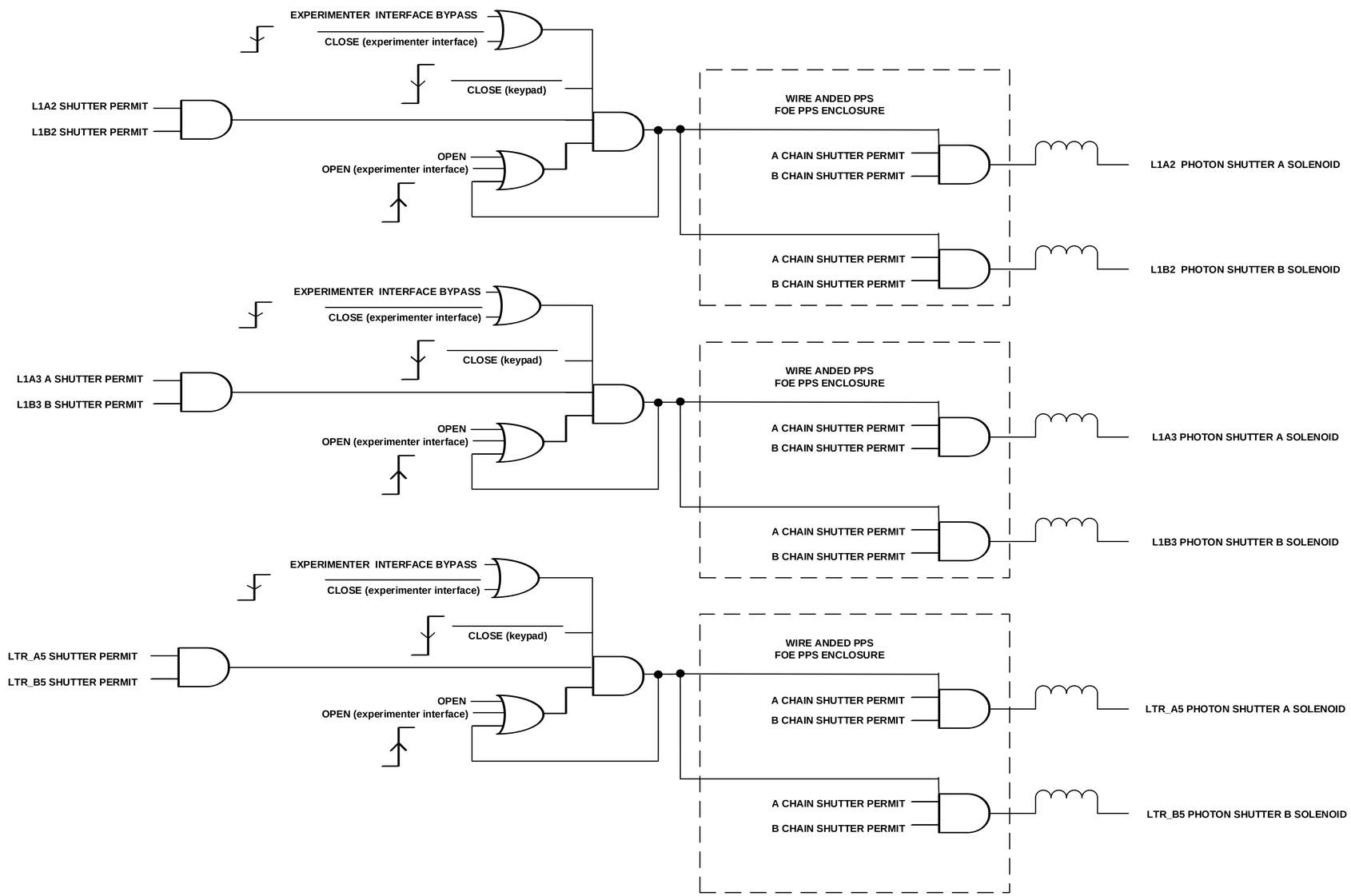

EPS

LT-EL-BL-EI-PPS-1070-96

LT-EL-BL-EI (DRAWING DIRECTORY)	LT-EL-BL-EI-PPS-1070-96 (DRAWING NUMBER)	A (REV)
COMPUTER REPRODUCABLE	SCALE: N/A	SHEET 13 OF 19

REV	DESCRIPTION	DATE	BY	CHECKED	APP
	SEE SHEET 1				

C CHAIN SHUTTER CONTROL

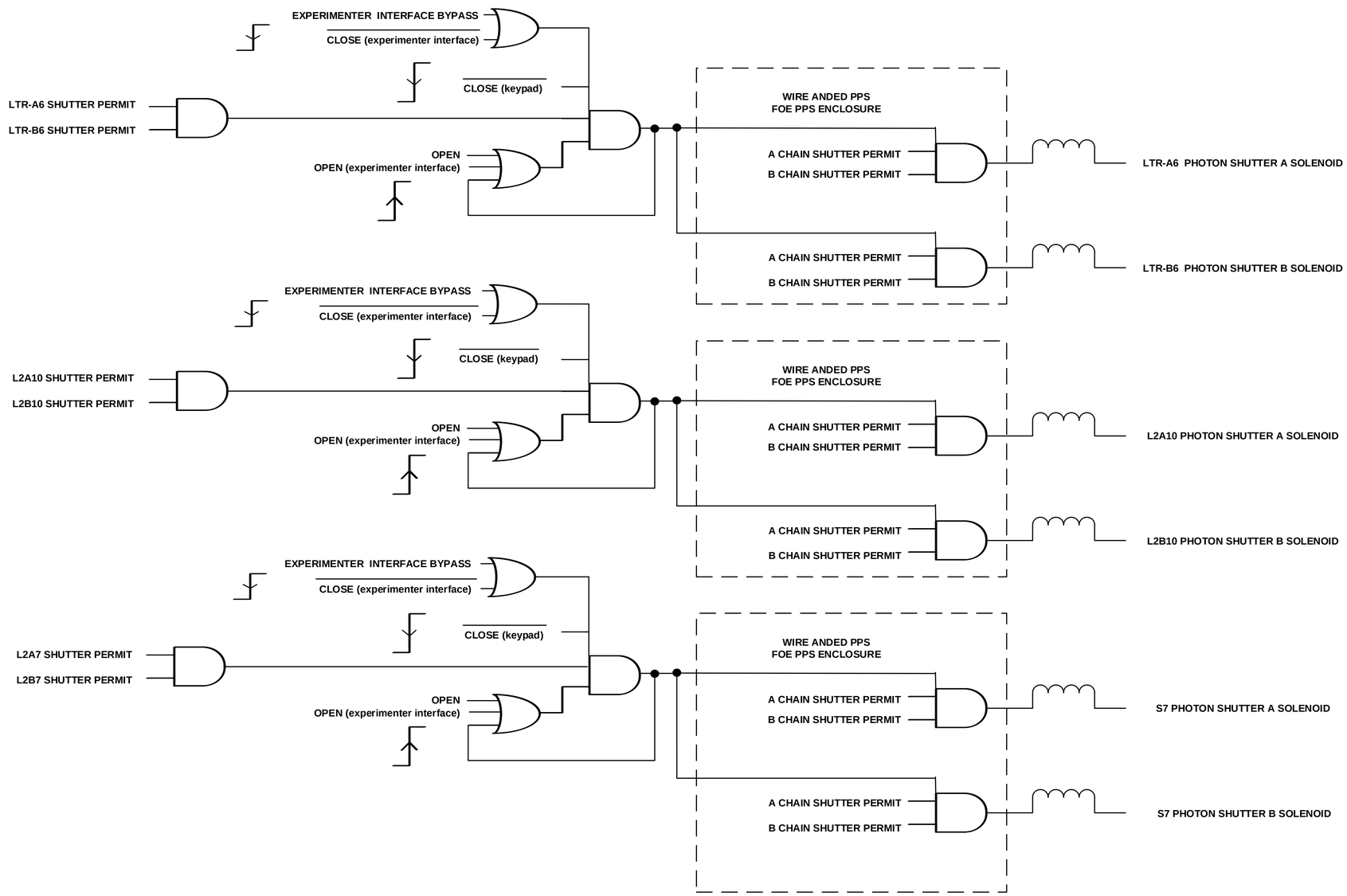

EPS

LT-EL-BL-EI (DRAWING DIRECTORY)	LT-EL-BL-EI-PPS-1070-96 (DRAWING NUMBER)	A (REV)
COMPUTER REPRODUCABLE	SCALE: N/A	SHEET 14 OF 19

LT-EL-BL-EI-PPS-1070-96

REV	DESCRIPTION	DATE	BY	CHECKED	APP
	SEE SHEET 1				

C CHAIN SHUTTER CONTROL

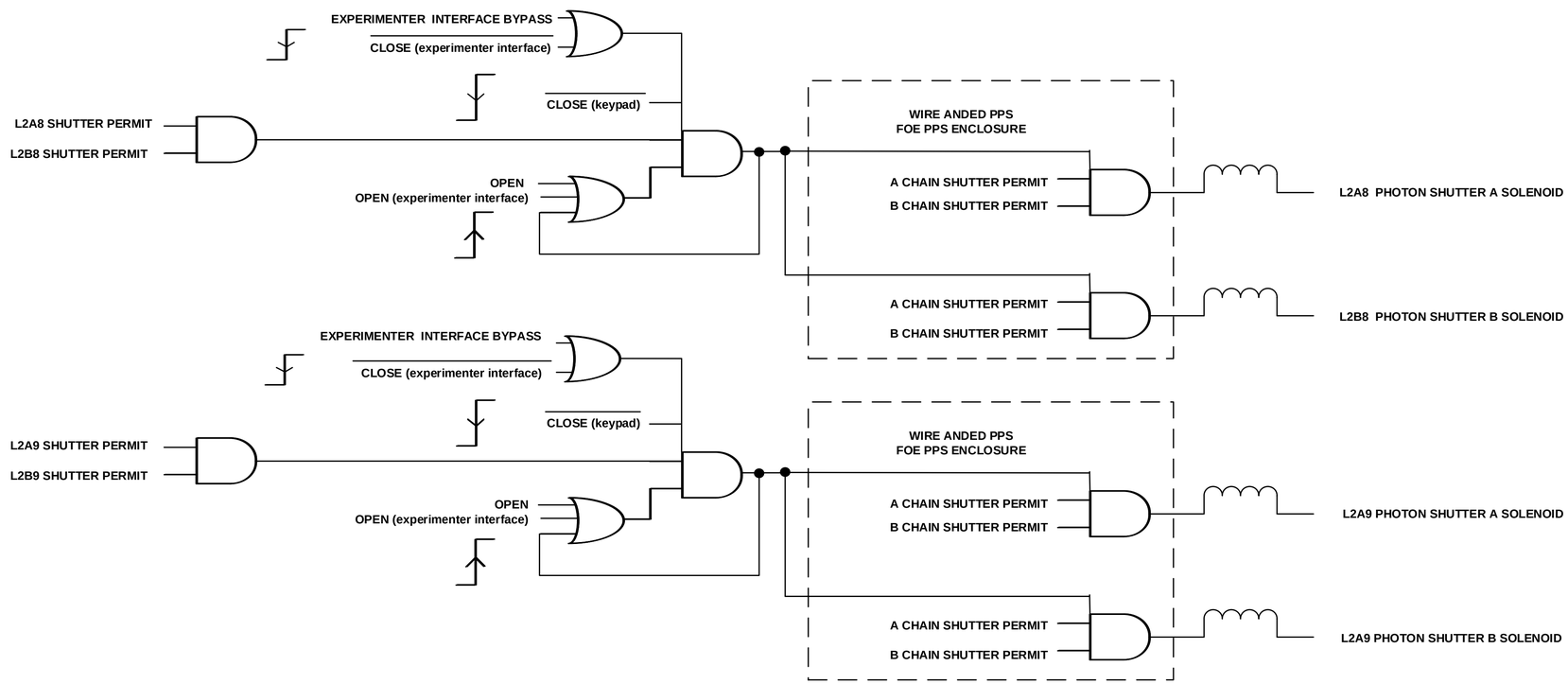

EPS

LT-EL-BL-EI	LT-EL-BL-EI-PPS-1070-96	A
DRAWING DIRECTORY	DRAWING NUMBER	REV

COMPUTER REPRODUCABLE | SCALE: N/A | SHEET 15 OF 19

LT-EL-BL-EI-PPS-1070-96

REV	DESCRIPTION	DATE	BY	CHECKED	APP
	SEE SHEET 1				

C CHAIN DOOR CONTROL FOE

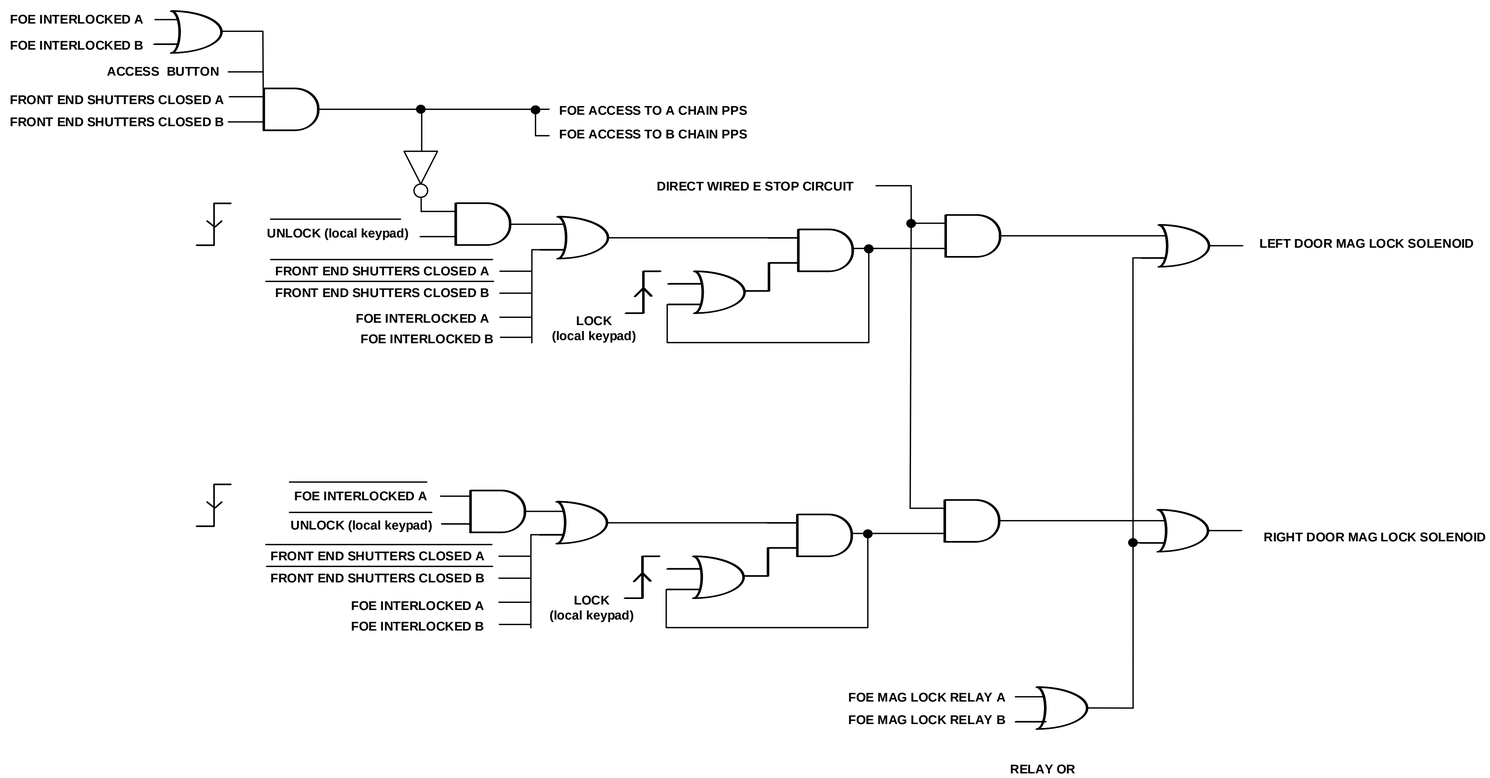

EPS

LT-EL-BL-EI (DRAWING DIRECTORY)	LT-EL-BL-EI-PPS-1070-96 (DRAWING NUMBER)	A (REV)
COMPUTER REPRODUCABLE	SCALE: N/A	SHEET 16 OF 19

LT-EL-BL-EI-PPS-1070-96

REV	DESCRIPTION	DATE	BY	CHECKED	APP
	SEE SHEET 1				

7-ID C CHAIN LOGIC
Shutter Permits

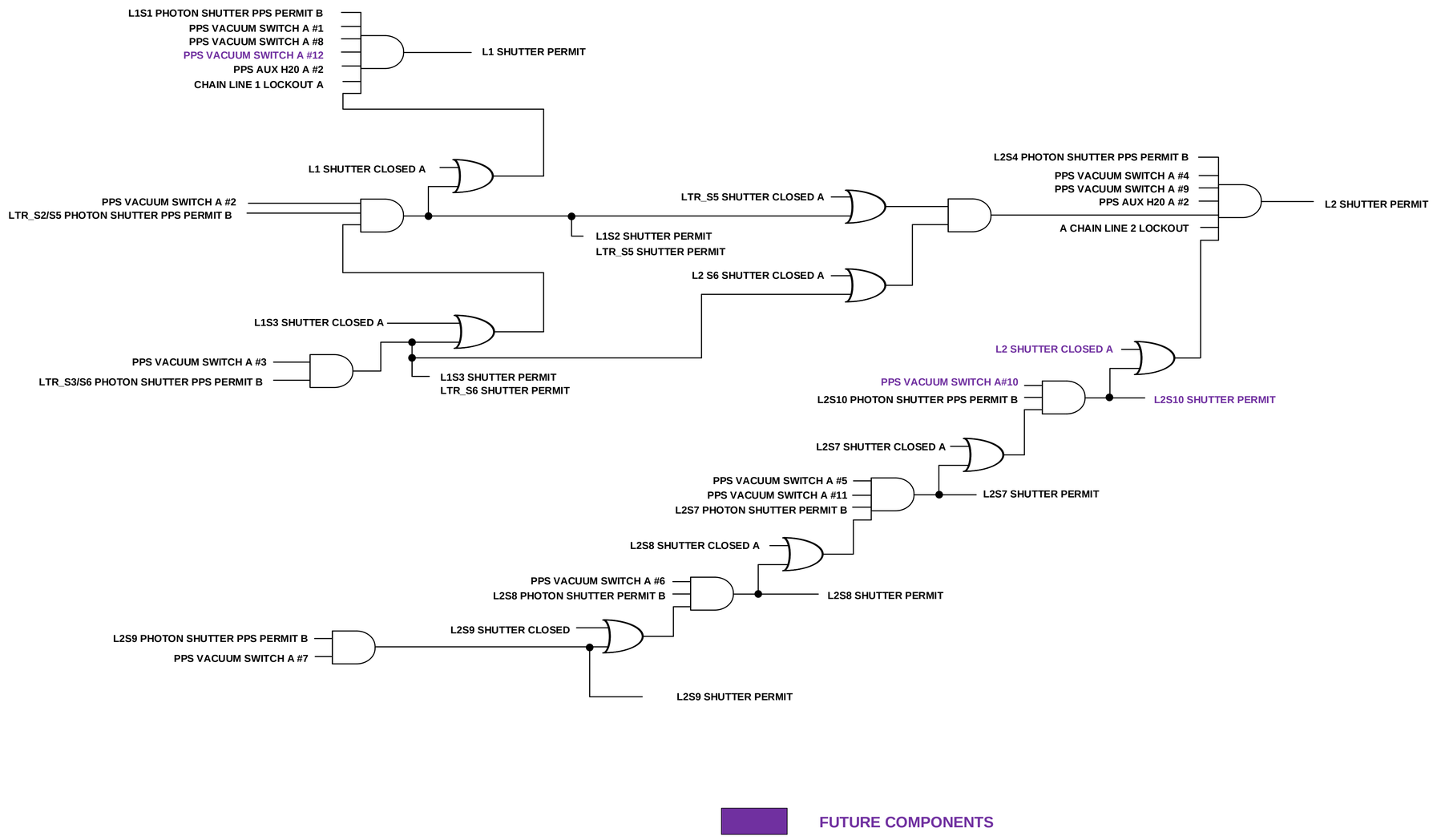

FUTURE COMPONENTS

LT-EL-BL-EI-PPS-1070-96

LT-EL-BL-EI (DRAWING DIRECTORY)	LT-EL-BL-EI-PPS-1070-96 (DRAWING NUMBER)	A (REV)
COMPUTER REPRODUCABLE	SCALE: N/A	SHEET 17 OF 19

REV	DESCRIPTION	DATE	BY	CHECKED	APP
	SEE SHEET 1				

FAULTS AND ALARMS A CHAIN

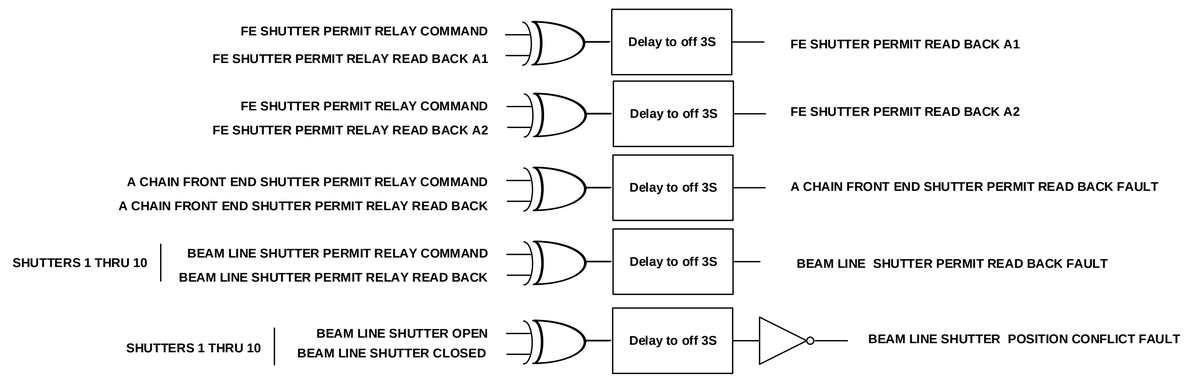

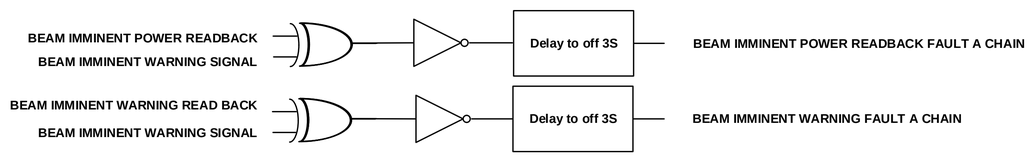

A CHAIN PROXIMITY SENSOR FAULT = DIRECT FROM SENSOR MODULE

A CHAIN HARDWARE FAULT = GENERATED FROM SYSTEM FAULT DATA

A CHAIN BEAM LINE FAULTA ARE SENT TO THE CONTROL ROOM ONLY WHEN BEAMLINE IS ENABLED AT FRONT END

REV	DESCRIPTION	DATE	BY	CHECKED	APP
	SEE SHEET 1				

FAULTS AND ALARMS B CHAIN

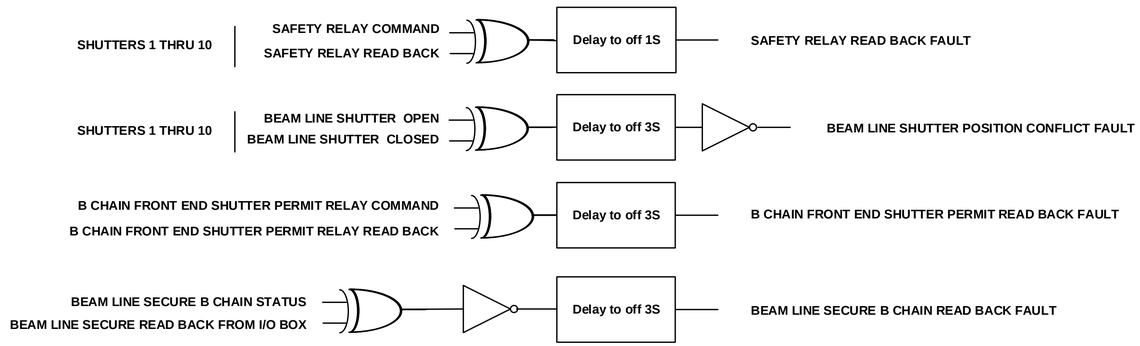

B CHAIN SAFETY SWITCH FAULTS ARE GENERATED BY FUNCTION BLOCKS, DOORS, CABLE LABYRINTHS

B CHAIN PROXIMITY SENSOR FAULT = DIRECT FROM SENSOR MODULE

B CHAIN HARDWARE FAULT = GENERATED FROM SYSTEM FAULT DATA

B CHAIN BEAM LINE FAULTA ARE SENT TO THE CONTROL ROOM ONLY WHEN BEAMLINE IS ENABLED AT FRONT END

LT-EL-BL-EI-PPS-1070-96

LT-EL-BL-EI (DRAWING DIRECTORY)	LT-EL-BL-EI-PPS-1070-96 (DRAWING NUMBER)	A (REV)
COMPUTER REPRODUCABLE	SCALE: N/A	SHEET 19 OF 19

REV	DESCRIPTION	DATE	BY	CHECKED	APP
A	INITIAL RELEASE	9/08/2014	SEJ	JM	SB
B	REVISED PER ECN LT-ECN-015-1257	7-29-15	CG	JM	SB
C	REVISED PER ECN LT-ECN-016-1373	12/03/2016	SEJ	JM	SB
D	REVISED PER ECN LT-ECN-016-1493	12/03/2016	SEJ	JM	SB
E	REVISED PER ECN LT-ECN-016-1606	9/08/2016	SEJ	JM	SB
F	REVISED PER ECN LT-ECN-017-1728	12/14/2016	SEJ	JM	SB
G	REVISED PER ECN LT-ECN-017-1840	08/29/2017	SEJ	JM	SB

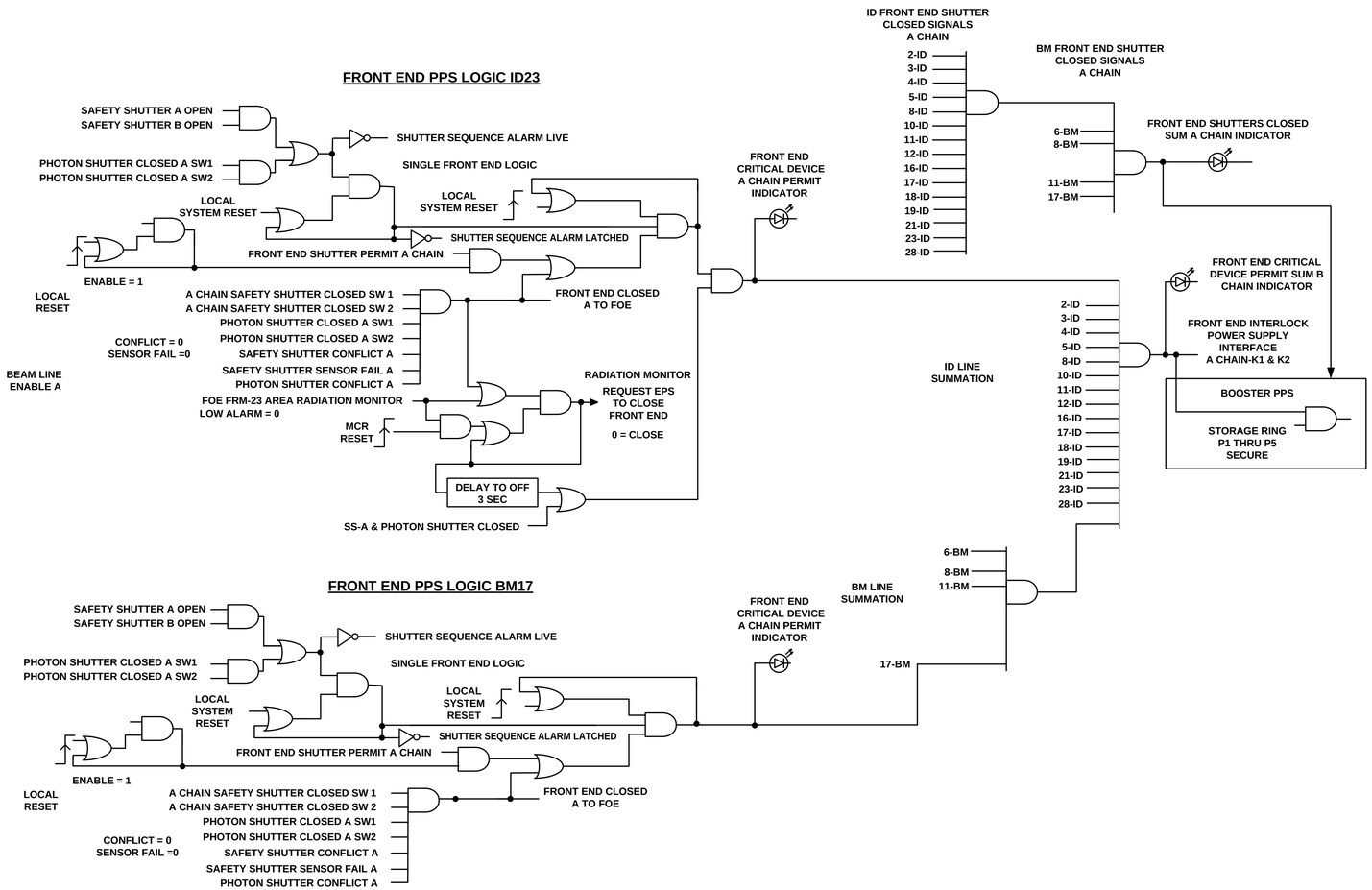

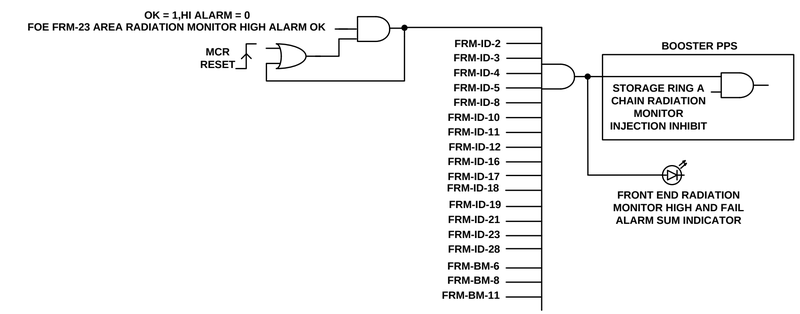

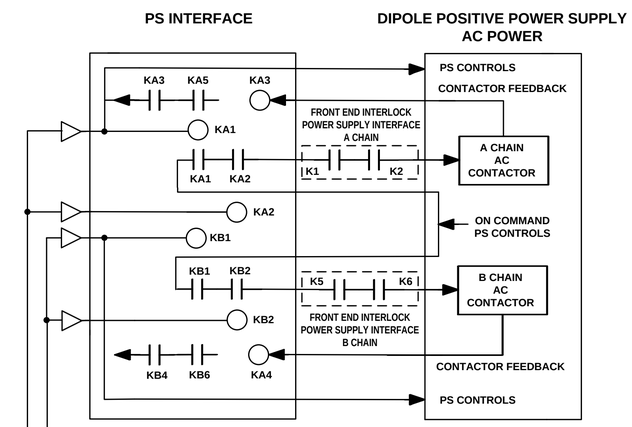

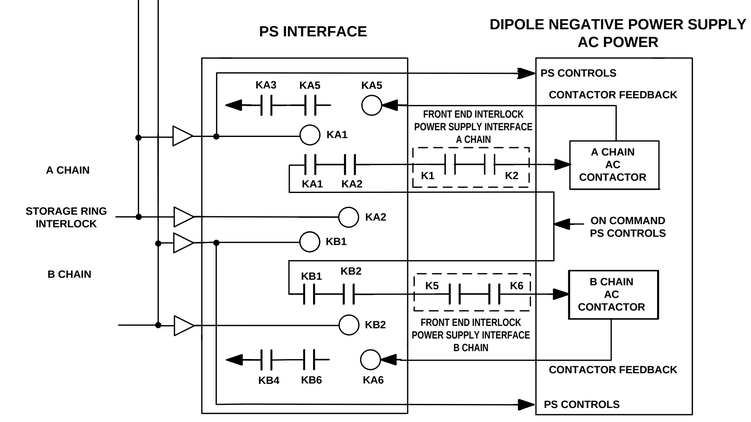

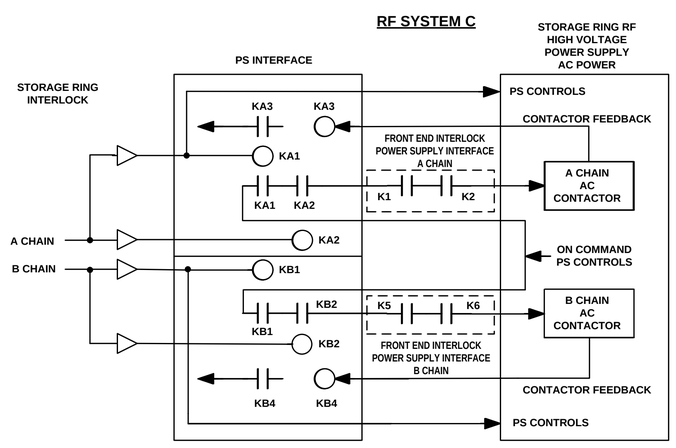

FULL NSLS2 DESIGN HAS UP TO 4 RF SYSTEMS (C SHOWN)

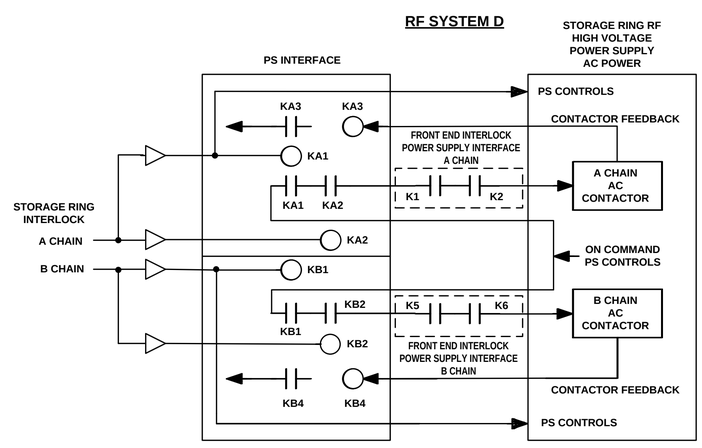

FULL NSLS2 DESIGN HAS UP TO 4 RF SYSTEMS (D SHOWN)

BROOKHAVEN NATIONAL LABORATORY

BROOKHAVEN NATIONAL LABORATORY
BROOKHAVEN SCIENCE ASSOCIATES
UPTON, NEW YORK 11973
Exploring Life's Mysteries, Protecting its Future

NSLSII NATIONAL SYNCHROTRON LIGHT SOURCE II

UNLESS OTHERWISE SPECIFIED
INTEGER TOLERANCES ± .06
DECIMAL TOLERANCES
.X ± .030
.XX ± .015
.XXX ± .010
ANGULAR TOLERANCE ± 0.5°
UNSPECIFIED RADII .02 MAX
125 FINISH — BREAK SHARP CORNERS AND EDGES
MAX .03 MIN .005

UNLESS OTHERWISE SPECIFIED DIMENSIONS ARE IN INCHES
DIMENSIONS IN [ ] ARE MILLIMETERS EQUIV. FOR REF. ONLY

ESH&Q RISK LEVEL A-1

INTERPRET DRAWING AS PER ANSI Y14.5 OR Y32.2

OUTSTANDING ECN'S

		DATE
DRWN BY	S. JARZABKOWSKI	9/08/2014
CHK BY	J. MALLEY	9/08/2014
ENG APP	S. BUDA	9/08/2014
SUPV APP	G. GANETIS	9/10/2014
QA APP	E. CHESWICK	9/08/2014
ESH APP	R. LEE	9/10/2014

WIRING DIAGRAM, FRONT END PPS SYSTEM LOGIC

DRAWING DIRECTORY: LT-EL-BL-EI
DRAWING NUMBER: LT-EL-BL-EI-PPS-0101-92
REV: G

WBS # 1.03.06.01.03
SCALE: N/A
SHEET 1 OF 3

JOB NUMBER
USED ON DWG. NO.

LT-EL-BL-EI-PPS-0101-92

REV	DESCRIPTION	DATE	BY	CHECKED	APP
	SEE SHEET 1				

FRONT END PPS LOGIC ID23

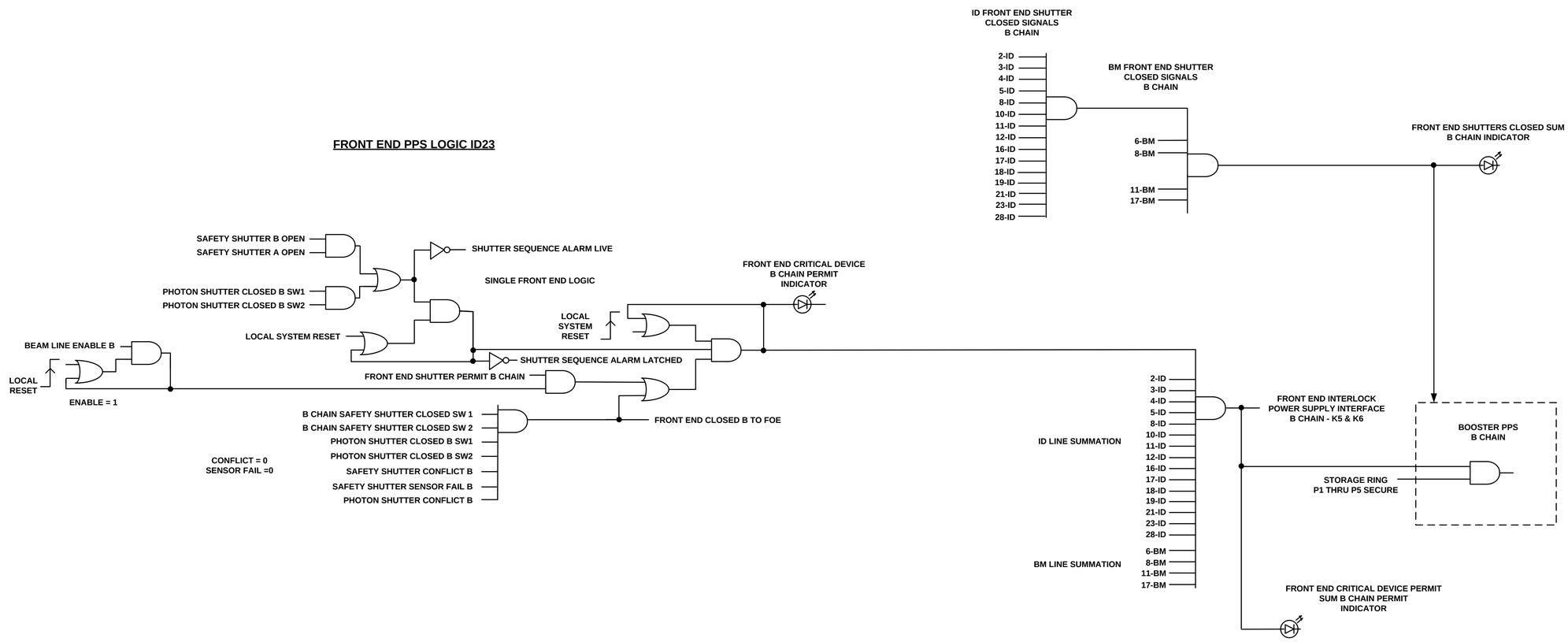

LT-EL-BL-EI	LT-EL-BL-EI-PPS-0101-92	G
DRAWING DIRECTORY	DRAWING NUMBER	REV
COMPUTER REPRODUCIBLE	SCALE: N/A	SHEET 2 OF 3

LT-EL-BL-EI-PPS-0101-92

REV	DESCRIPTION	DATE	BY	CHECKED	APP
	SEE SHEET 1				

A CHAIN

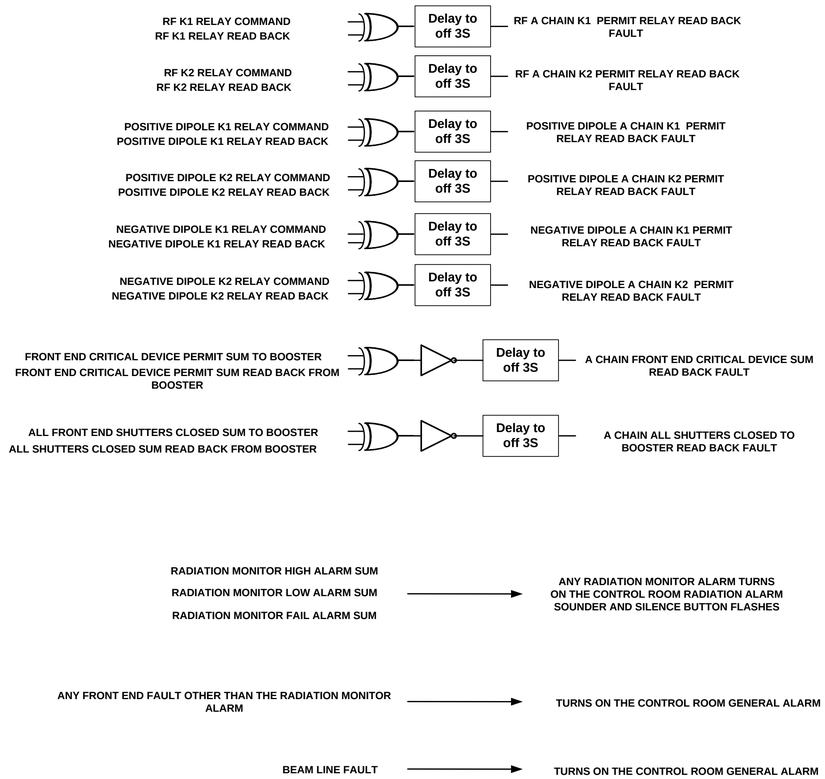

B CHAIN

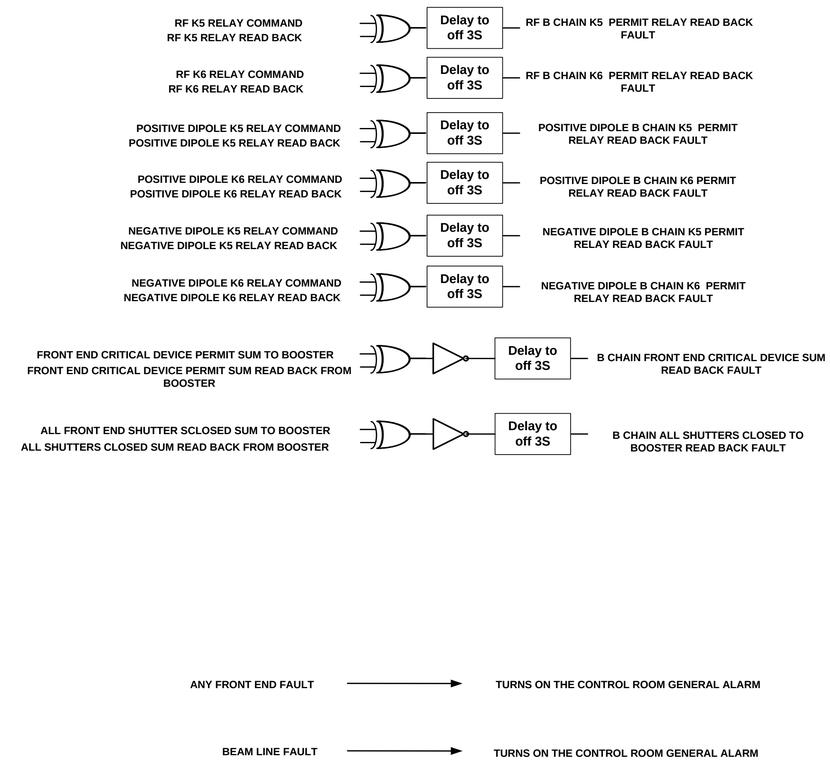

LT-EL-BL-EI-PPS-0101-92

LT-EL-BL-EI (DRAWING DIRECTORY)	LT-EL-BL-EI-PPS-0101-92 (DRAWING NUMBER)	G (REV)
COMPUTER REPRODUCIBLE	SCALE: N/A	SHEET 3 OF 3

National Synchrotron Light Source

Building 743, National Synchrotron Light Source
Brookhaven National Laboratory
Upton, NY 11973-5000
Phone 631 344-2117
Fax 631 344-3238
zhong@bnl.gov

managed by Brookhaven Science Associates
for the U.S. Department of Energy

Memo

Date: January 31, 2018
To: George Ganetis, and Scott Buda
From: Zhong Zhong (chair), NSLS II Radiation Safety Committee
Subject: Radiation Safety Committee endorsement of the PPS design of 7-ID (SST) and 28-ID (PDF) beamlines

Dear George and Scott

I would like to thank you for inviting the RSC sub-committee for PPS (personal protection system) interlock, Mohamed Benmerrouche, Dana Beavis, Robert Lee, and myself, to the review of the PPS logic diagrams for 7-ID (SST) and 28-ID (PDF) beamlines.

The following logic diagrams were reviewed:

1. Wiring diagram, 7-ID FOE search logic, ID7 FOE Beamline PPS component layout, A Chain and B chain search logic, 17 sheets total.
2. Wiring diagram, LT-EL-BL-EI-PPS-1280-96, rev. D by S. Buda, includes 28-ID FOE search logic, 28-ID ESEE B search logic (new), Chain C door control (new) .20 sheets.

7-ID consists of the FOE and experimental endstation chambers on the experimental floor. Similar to CSX and SIX, SST beamline uses vacuum switches, located at each of the experimental endstations, to control access to the endstation chambers on the experimental floor.

28-ID logic diagram serving the XPD beamlines (endstations C and D) was reviewed before. The new addition of EESE B (PDF beamline) search logic was denoted “new” in the updated logic diagram. Access to EESE B is allowed when photon shutters are closed. As before, access to FOE (enclosure A) is allowed only when front-end shutters are closed.

While the IWG should be the primary reviewer for interlock logic diagrams, the RSC brings in broader expertise in areas such as radiation physics and PS shielding policy. This review by the RSC sub-committee compliments the shielding and ray-tracing reviews, recently for SST and in the future for PDF, by the RSC.

As a result of the sub-committee review, the RSC concurs that the PPS designs of 7-ID and 28-ID beamlines meet Photon Sciences shielding policy.

Radiation Safety Committee

Name	*Expertise*	*Directorate*
Andrew Ackerman	Deputy ESH Manager	PS
Dana Beavis	Experimental Nuclear Particle Physics	NPP
Andi Barbour	Beam Line Physicist	PS
Mohamed Benmerrouche	Nuclear and Radiation Physics	PS
Scott Buda	Personnel Protective Systems	PS
Ray Fliller	Accelerator Physicist	PS
Wah-Keat Lee	Beam Line Physicist	PS
Boris Podobedov	Accelerator Physics	PS
Chuck Schaefer	Accelerator SME	ESH
Lutz Wiegart	Beam Line Physicist	PS
Zhong Zhong	Beam Line Physicist	PS
Emil Zitvogel	Accelerator Operations	PS
Ashley Shoemaker-Skokov	Administrative Support	PS

Ray-tracing sub-committee

Andrew Ackerman	Deputy ESH Manager	PS
Mary Carlucci-Dayton	Mechanical Engineer	PS
Wah-Keat Lee	Beam Line Physicist	PS
Chuck Schaefer	Accelerator SME	ESH
Christopher Stelmach	Designer	PS
Lutz Wiegart	Beam Line Physicist	PS
Zhong Zhong	Beam Line Physicist	PS

PPS sub-committee

Dana Beavis	Experimental Nuclear Particle Physics	NPP
Mohamed Benmerrouche	Nuclear and Radiation Physics	PS
Scott Buda	Personnel Protective Systems	PS
Robert Lee	ESH manager	PS
Zhong Zhong	Beam Line Physicist	PS

RSC checklist sub-committee

Andi Barbour	Beam Line Physicist	PS
Mohamed Benmerrouche	Nuclear and Radiation Physics	PS
Ray Fliller	Accelerator Physicist	PS

REV	DESCRIPTION	DATE	BY	CHECKED	APP
A	INITIAL RELEASE	1/22/2018	SEJ	JM	SB

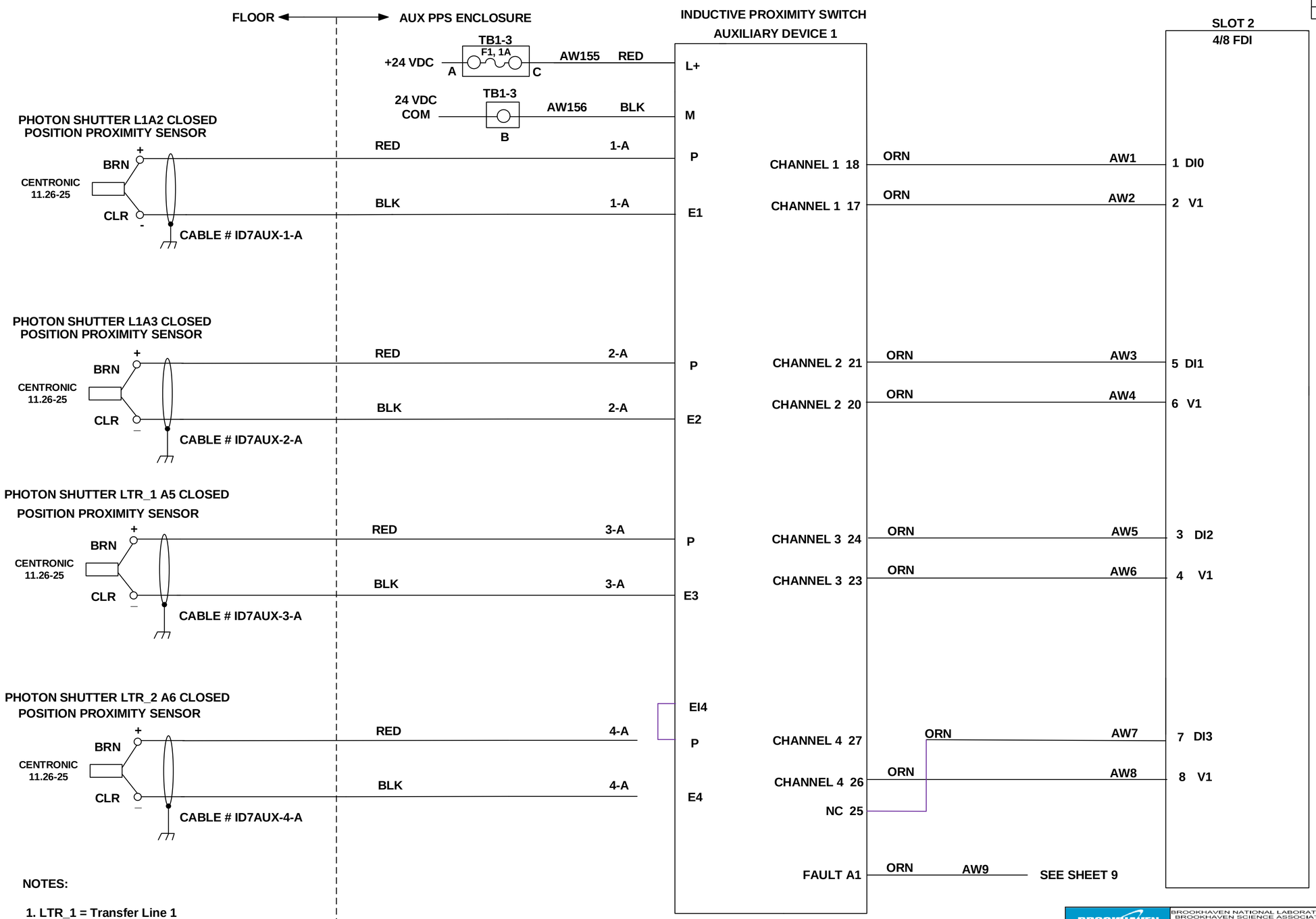

NOTES:

1. LTR_1 = Transfer Line 1
2. LTR_2 = Transfer Line 2

A

LT-EL-BL-EI-PPS-1070-90

JOB NUMBER	USED ON DWG. NO.

BROOKHAVEN NATIONAL LABORATORY

BROOKHAVEN NATIONAL LABORATORY
BROOKHAVEN SCIENCE ASSOCIATES
UPTON, NEW YORK 11973

Exploring Life's Mysteries, Protecting its Future

NSLSII NATIONAL SYNCHROTRON LIGHT SOURCE II

UNLESS OTHERWISE SPECIFIED
INTEGER TOLERANCES ± .06
DECIMAL TOLERANCES
.X ± .030
.XX ± .015
.XXX ± .010
ANGULAR TOLERANCE ± 0.5°
UNSPECIFIED RADII .02 MAX
125 FINISH
BREAK SHARP CORNERS AND EDGES
MAX .03 MIN .005

UNLESS OTHERWISE SPECIFIED DIMENSIONS ARE IN INCHES DIMENSIONS IN [*.**] ARE MILLIMETERS EQUIV. FOR REF. ONLY

INTERPRET DRAWING AS PER ANSI Y14.5 OR Y32.2

ESH&Q RISK LEVEL A-1

		DATE	OUTSTANDING ECN'S
DRWN BY	S. JARZABKOWSKI	1/24/2018	
CHK BY	J. MALLEY	1/26/2018	
ENG APP	S. BUDA	1/24/2018	
SUPV APP	G. GANETIS	1/26/2018	
QA APP	E. CHESWICK	1/26/2018	
ESH APP	R. LEE	1/26/2018	

WIRING DIAGRAM, 7-ID-AUX (SST-AUX) A CHAIN AND B CHAIN

DRAWING DIRECTORY	DRAWING NUMBER	REV
LT-EL-BL-EI	LT-EL-BL-EI-PPS-1070-90	A

COMPUTER REPRODUCIBLE | SCALE: N/A | SHEET 1 OF 34

REV	DESCRIPTION	DATE	BY	CHECKED	APP
	SEE SHEET 1				

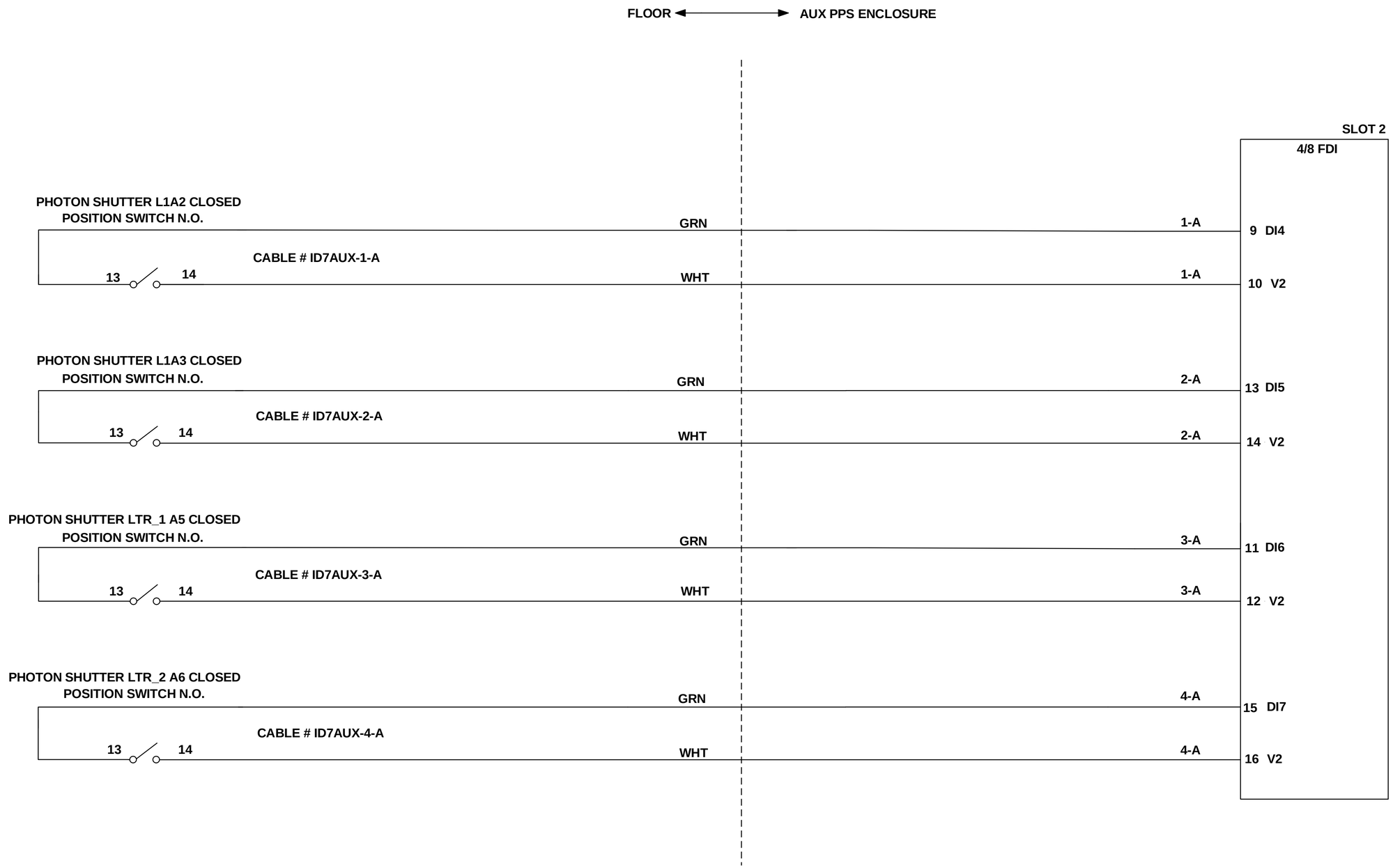

NOTES:

1. LTR_1 = Transfer Line 1
2. LTR_2 = Transfer Line 2

A

LT-EL-BL-EI (DRAWING DIRECTORY)	LT-EL-BL-EI-PPS-1070-90 (DRAWING NUMBER)	A (REV)
COMPUTER REPRODUCIBLE	SCALE: N/A	SHEET 2 OF 34

LT-EL-BL-EI-PPS-1070-90

REV	DESCRIPTION	DATE	BY	CHECKED	APP
	SEE SHEET 1				

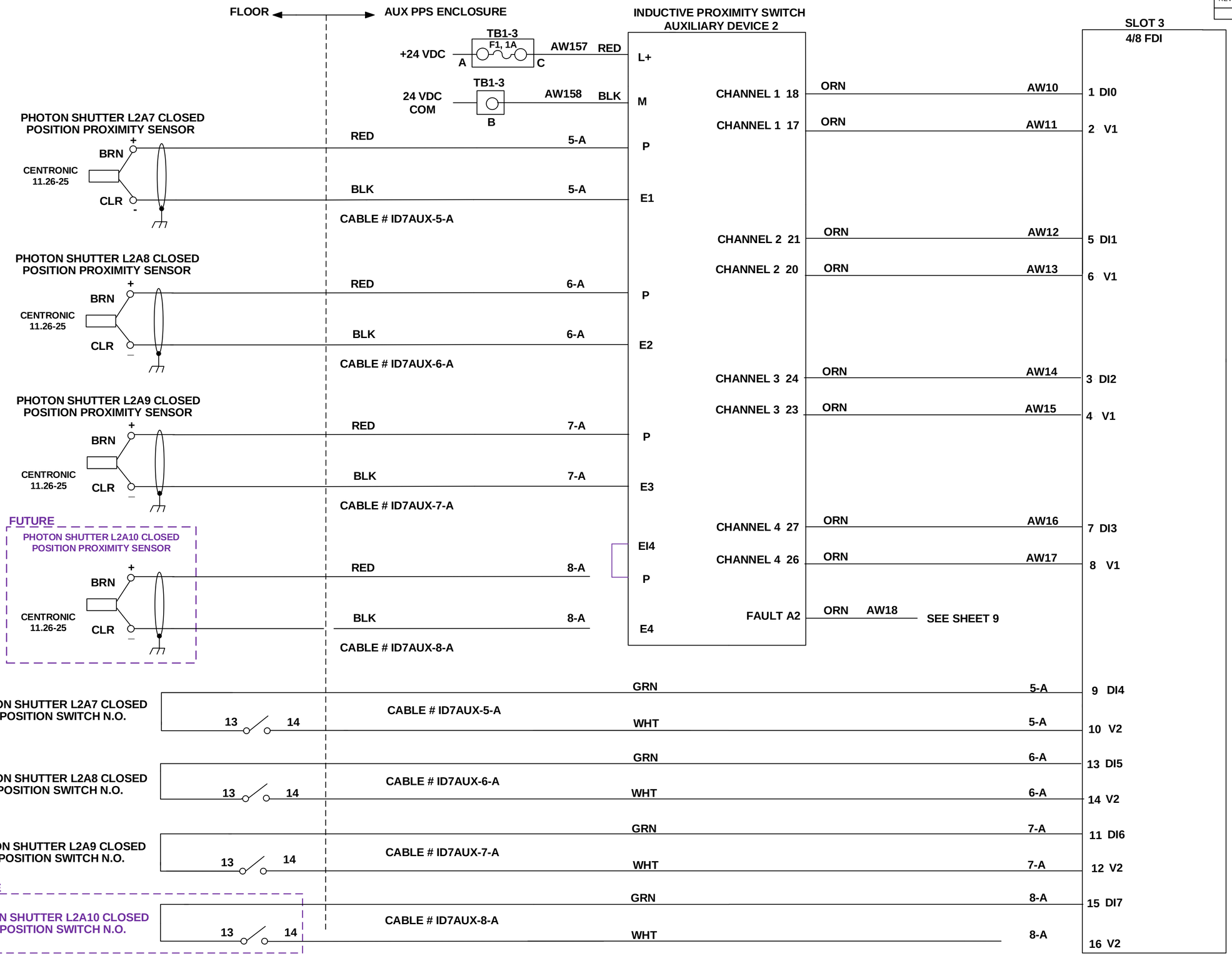

A

LT-EL-BL-EI	LT-EL-BL-EI-PPS-1070-90	A
DRAWING DIRECTORY	DRAWING NUMBER	REV

COMPUTER REPRODUCIBLE | SCALE: N/A | SHEET 3 OF 34

LT-EL-BL-EI-PPS-1070-90

REV	DESCRIPTION	DATE	BY	CHECKED	APP
	SEE SHEET 1				

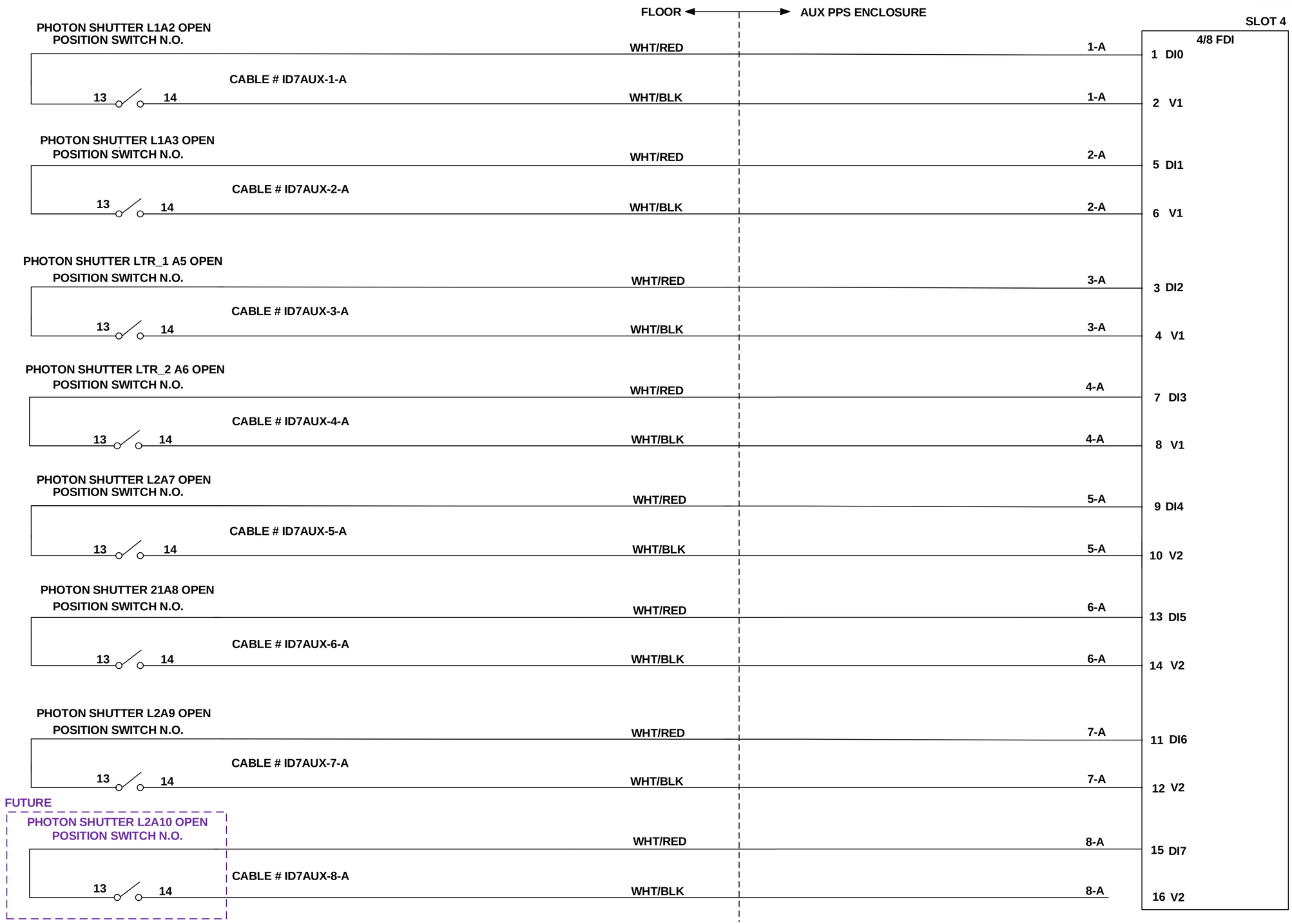

NOTES:

1. LTR_1 = Transfer Line 1
2. LTR_2 = Transfer Line 2

A

LT-EL-BL-EI-PPS-1070-90

LT-EL-BL-EI (DRAWING DIRECTORY)	LT-EL-BL-EI-PPS-1070-90 (DRAWING NUMBER)	A (REV)
COMPUTER REPRODUCIBLE	SCALE: N/A	SHEET 4 OF 34

REV	DESCRIPTION	DATE	BY	CHECKED	APP
	SEE SHEET 1				

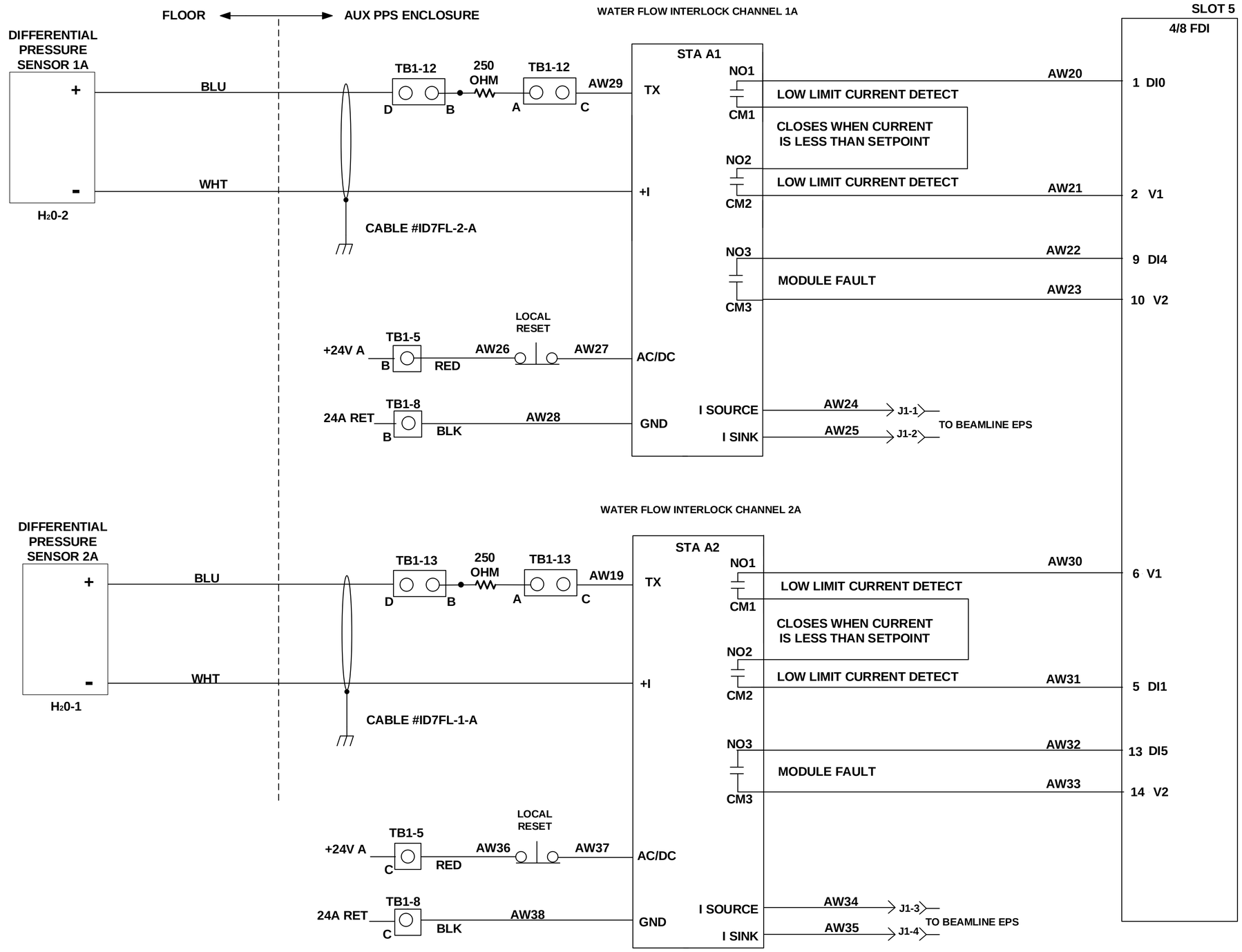

STA DEVICE PARAMETER CONFIGURATION		
DEVICE NAME / LOCATION:	STA_AUX A1 ID7	
MODEL :	STA/HLPRG/3PRG/24DC/-AO[DIN]	
INPUT		
Measurement Type:	Current	
Input Range:	Zero: 4.0 mA, Full: 20 mA	
Filter Settings:	60 Hz	
Broken wire:	Enable	
TRIMMING	Disable	
SCALING	Zero: 0.0, Full: 1.5 GPM	
DISPLAY		
Display Source:	Process Variable (PV)	
Precision:	Auto	
ALARMS	ALARM 1	ALARM 2
Mode:	Low Trip	Hi Trip
Latching:	Off	Off
Trip point:	0.6 GPM	0.0 GPM
Dead Band:	0.0 GPM	0.0 GPM
Delay:	0 s	0 s
ANALOG OUTPUT		
Mode:	Current	
Fail mode:	Fail Low	
AO Range:	Zero: 4.0, Full: 20.0 mA	
Damping:	Disable (0.0 s)	

STA DEVICE PARAMETER CONFIGURATION		
DEVICE NAME / LOCATION:	STA_AUX A2 ID7	
MODEL :	STA/HLPRG/3PRG/24DC/-AO[DIN]	
INPUT		
Measurement Type:	Current	
Input Range:	Zero: 4.0 mA, Full: 20 mA	
Filter Settings:	60 Hz	
Broken wire:	Enable	
TRIMMING	Disable	
SCALING	Zero: 0.0, Full: 2.61 GPM	
DISPLAY		
Display Source:	Process Variable (PV)	
Precision:	Auto	
ALARMS	ALARM 1	ALARM 2
Mode:	Low Trip	Hi Trip
Latching:	Off	Off
Trip point:	0.5 GPM	0.0 GPM
Dead Band:	0.0 GPM	0.0 GPM
Delay:	0 s	0 s
ANALOG OUTPUT		
Mode:	Current	
Fail mode:	Fail Low	
AO Range:	Zero: 4.0, Full: 20.0 mA	
Damping:	Disable (0.0 s)	

A

LT-EL-BL-EI-PPS-1120-91

LT-EL-BL-EI (DRAWING DIRECTORY)	LT-EL-BL-EI-PPS-1120-91 (DRAWING NUMBER)	A (REV)
COMPUTER REPRODUCABLE	SCALE: N/A	SHEET 5 OF 34

REV	DESCRIPTION	DATE	BY	CHECKED	APP
	SEE SHEET 1				

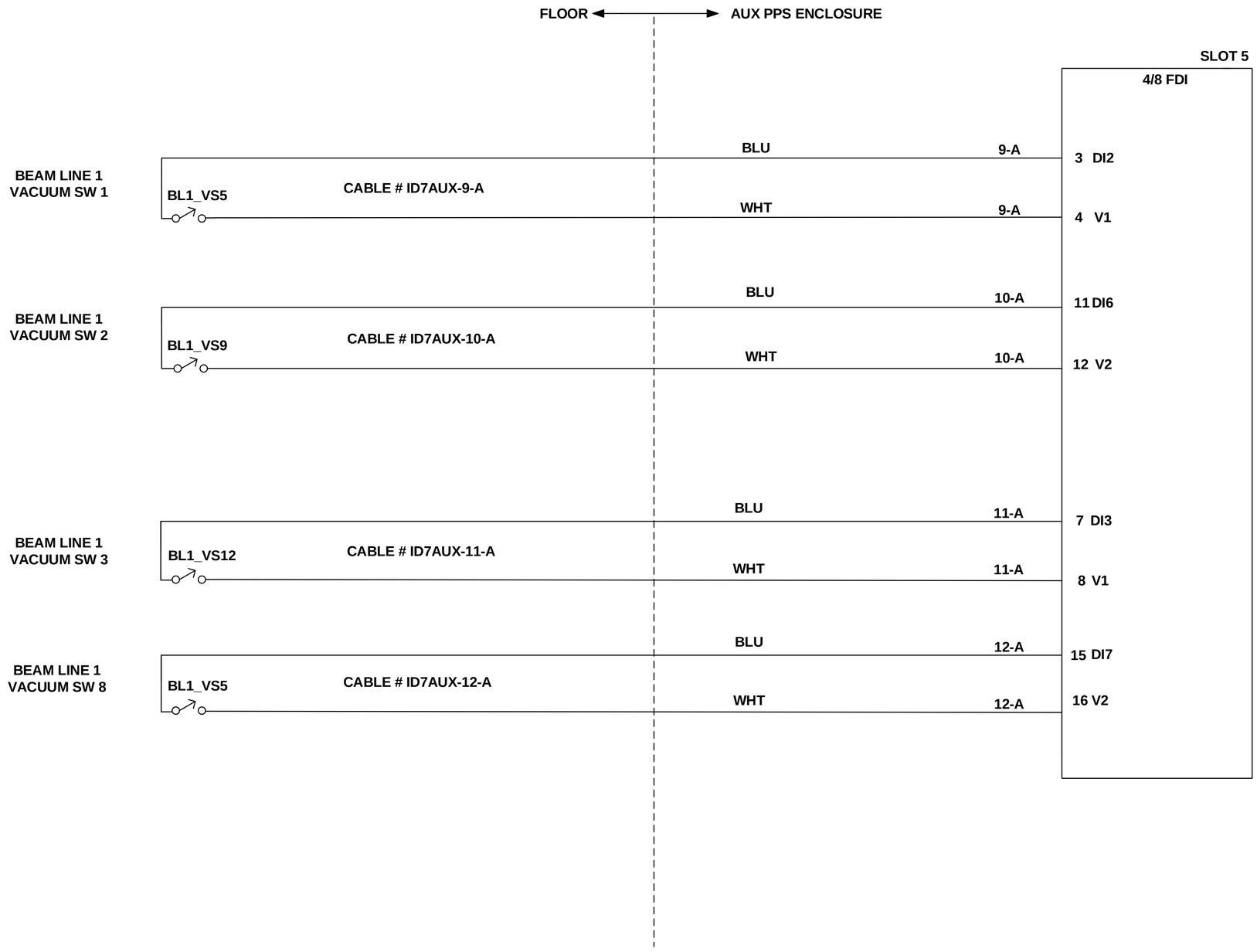

NOTES:

1. VACUUM SWITCHES ARE CLOSED WHEN BEAMLINE IS SAFE.

A

LT-EL-BL-EI (DRAWING DIRECTORY)	LT-EL-BL-EI-PPS-1070-91 (DRAWING NUMBER)	A (REV)
COMPUTER REPRODUCIBLE	SCALE: N/A	SHEET 6 OF 34

LT-EL-BL-EI-PPS-1070-91

REV	DESCRIPTION	DATE	BY	CHECKED	APP
	SEE SHEET 1				

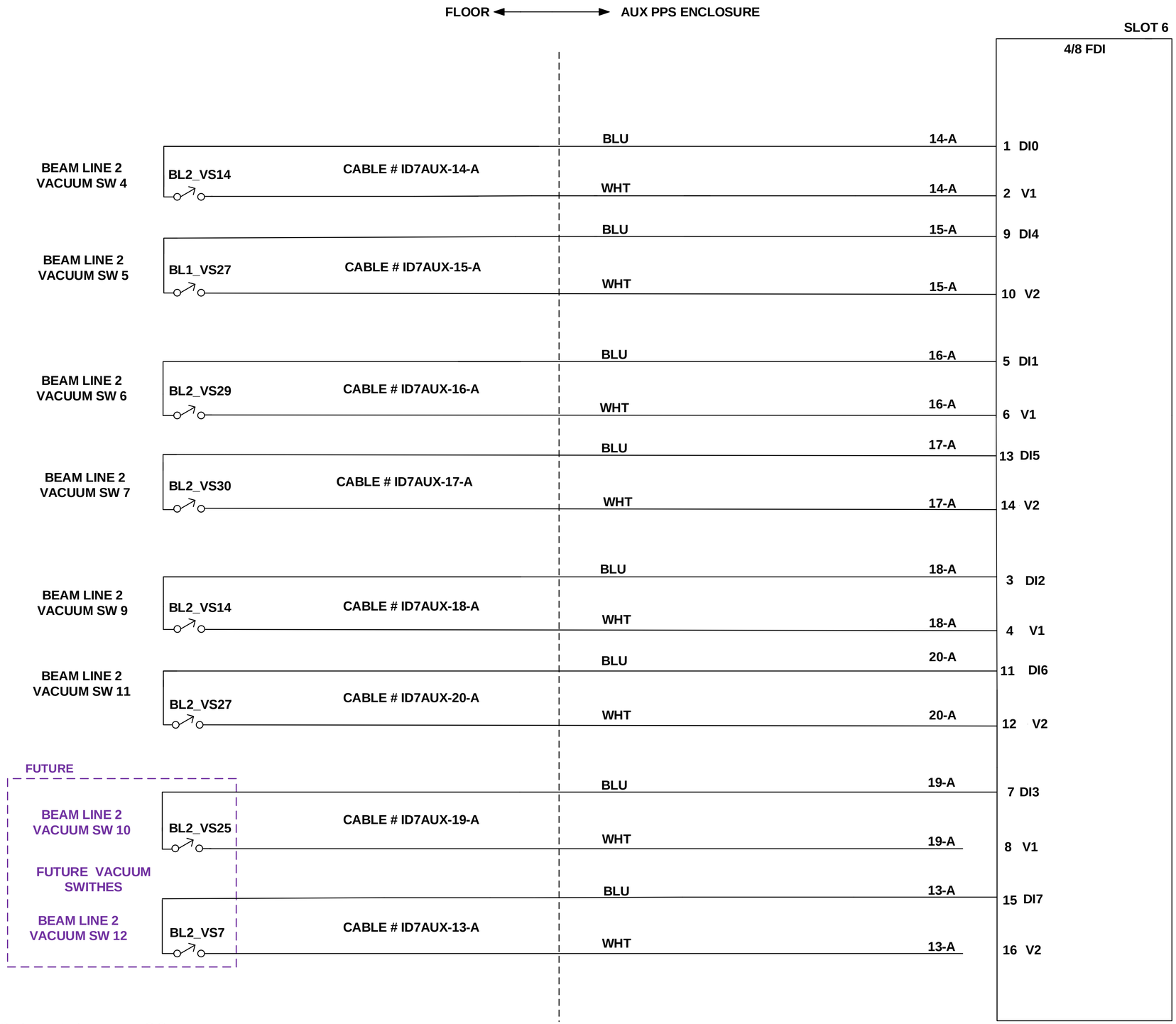

NOTES:

1. VACUUM SWITCHES ARE CLOSED WHEN BEAMLINE IS SAFE.

A

LT-EL-BL-EI-PPS-1070-90

LT-EL-BL-EI (DRAWING DIRECTORY)	LT-EL-BL-EI-PPS-1070-90 (DRAWING NUMBER)	A
COMPUTER REPRODUCIBLE	SCALE: N/A	SHEET 7 OF 34

REV	DESCRIPTION	DATE	BY	CHECKED	APP
	SEE SHEET 1				

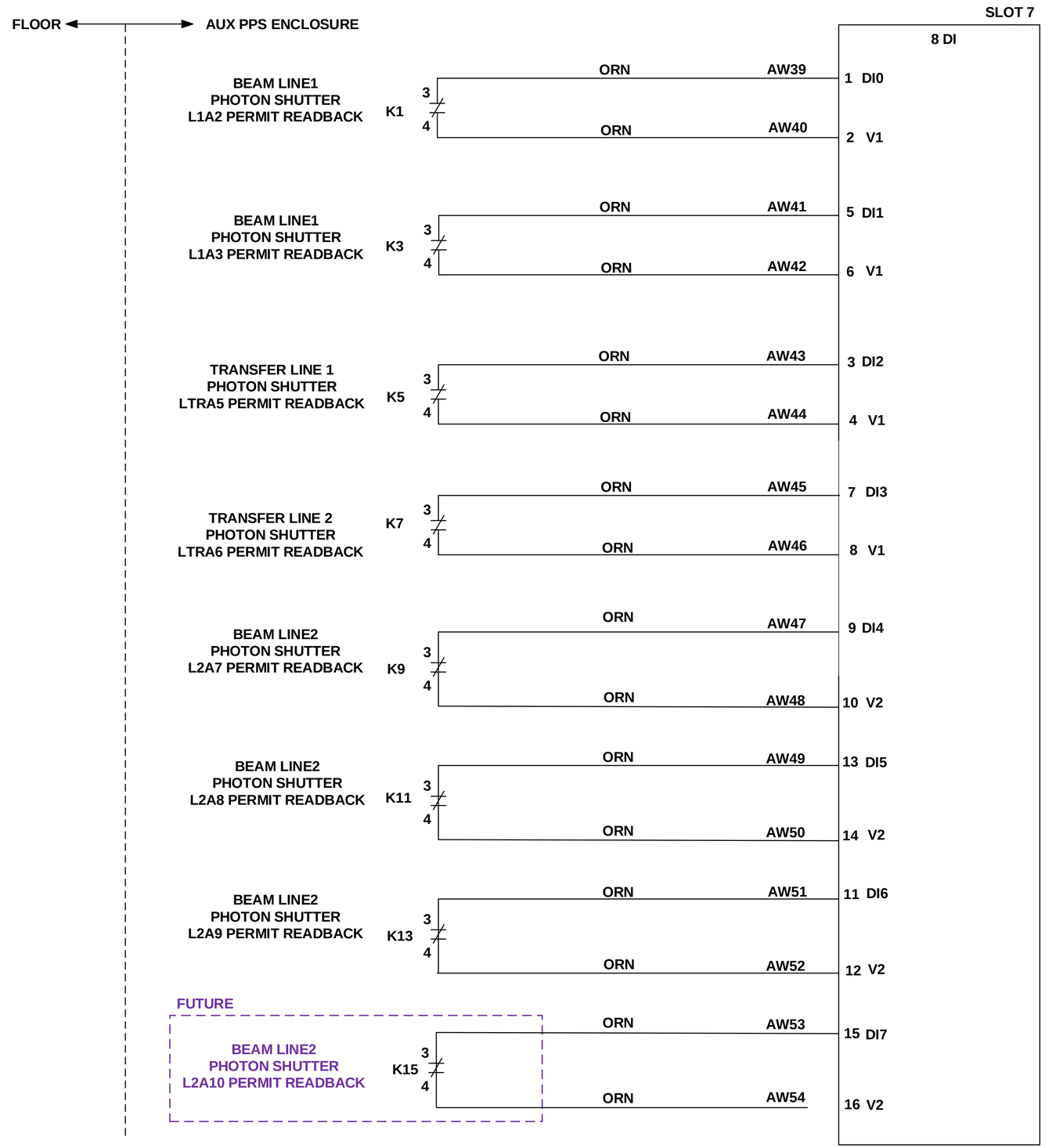

A

LT-EL-BL-EI	LT-EL-BL-EI-PPS-1070-90	A
DRAWING DIRECTORY	DRAWING NUMBER	REV

COMPUTER REPRODUCIBLE | SCALE: N/A | SHEET 8 OF 34

LT-EL-BL-EI-PPS-1070-90

REV	DESCRIPTION	DATE	BY	CHECKED	APP
	SEE SHEET 1				

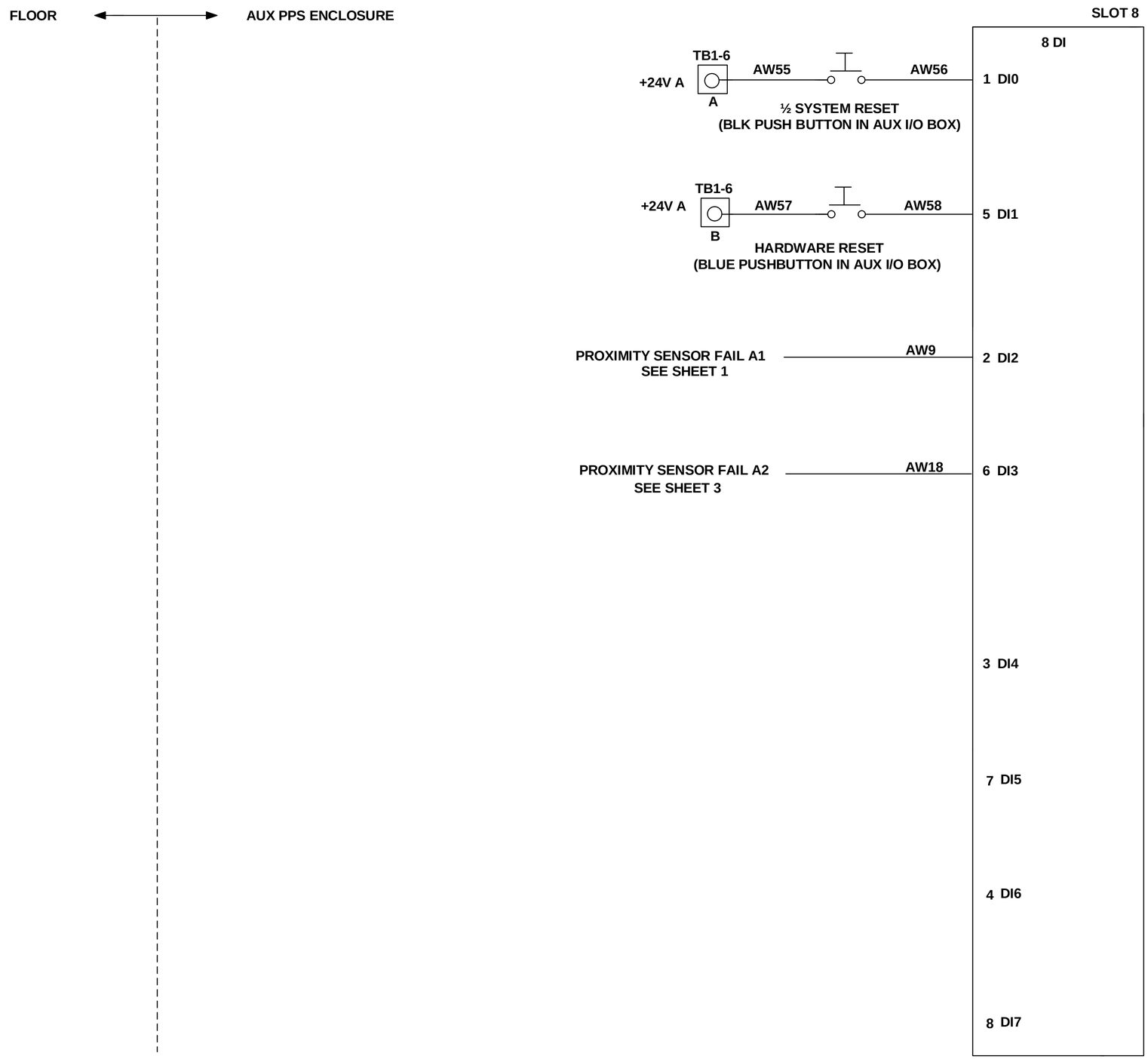

A

LT-EL-BL-EI	LT-EL-BL-EI-PPS-1070-91	A
DRAWING DIRECTORY	DRAWING NUMBER	REV

COMPUTER REPRODUCIBLE | SCALE: N/A | SHEET 9 OF 34

LT-EL-BL-EI-PPS-1070-91

REV	DESCRIPTION	DATE	BY	CHECKED	APP
	SEE SHEET 1				

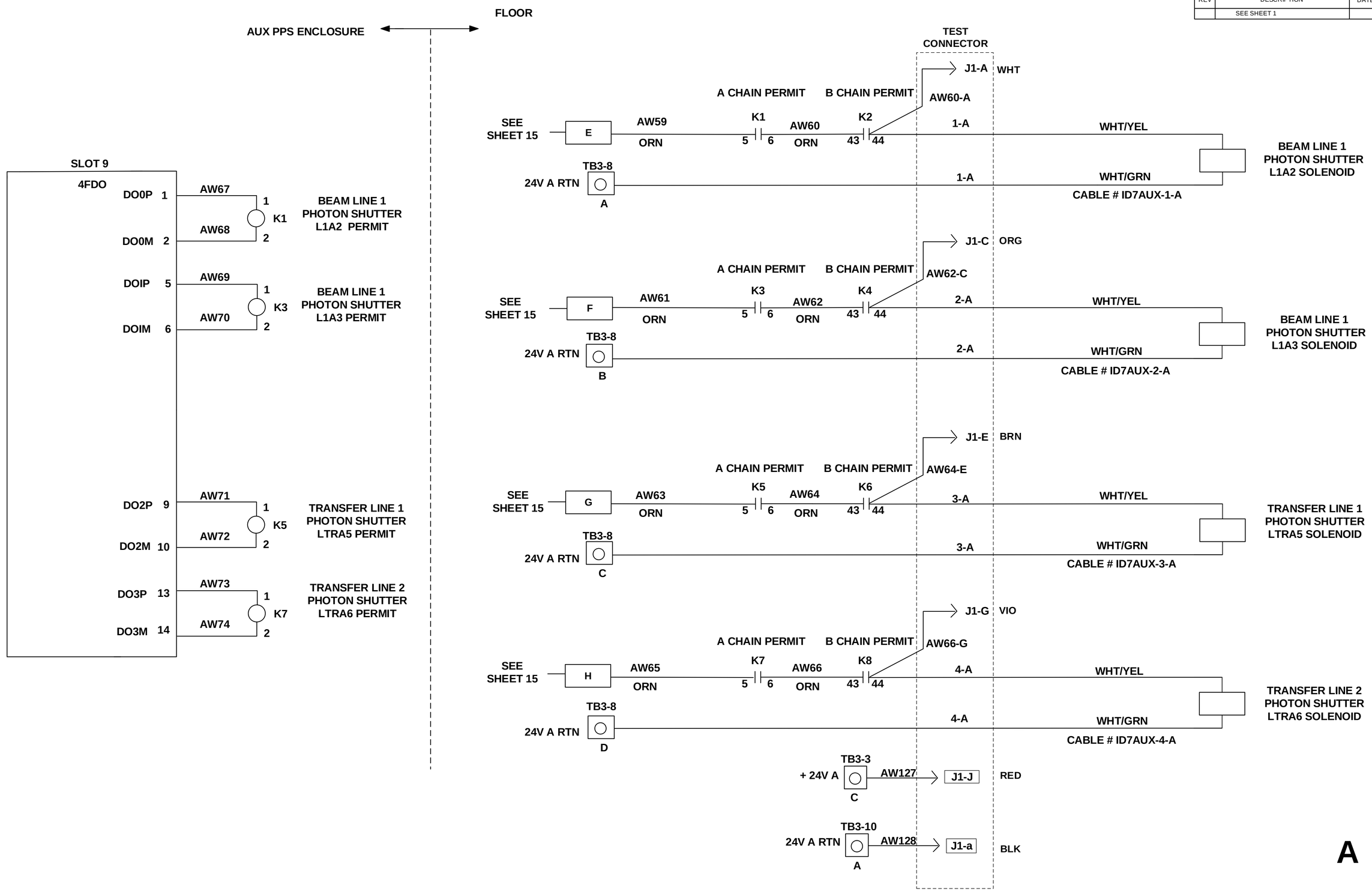

A

LT-EL-BL-EI	LT-EL-BL-EI-PPS-1070-90	A
DRAWING DIRECTORY	DRAWING NUMBER	REV

COMPUTER REPRODUCIBLE | SCALE: N/A | SHEET 10 OF 34

LT-EL-BL-EI-PPS-1070-90

REV	DESCRIPTION	DATE	BY	CHECKED	APP
	SEE SHEET 1				

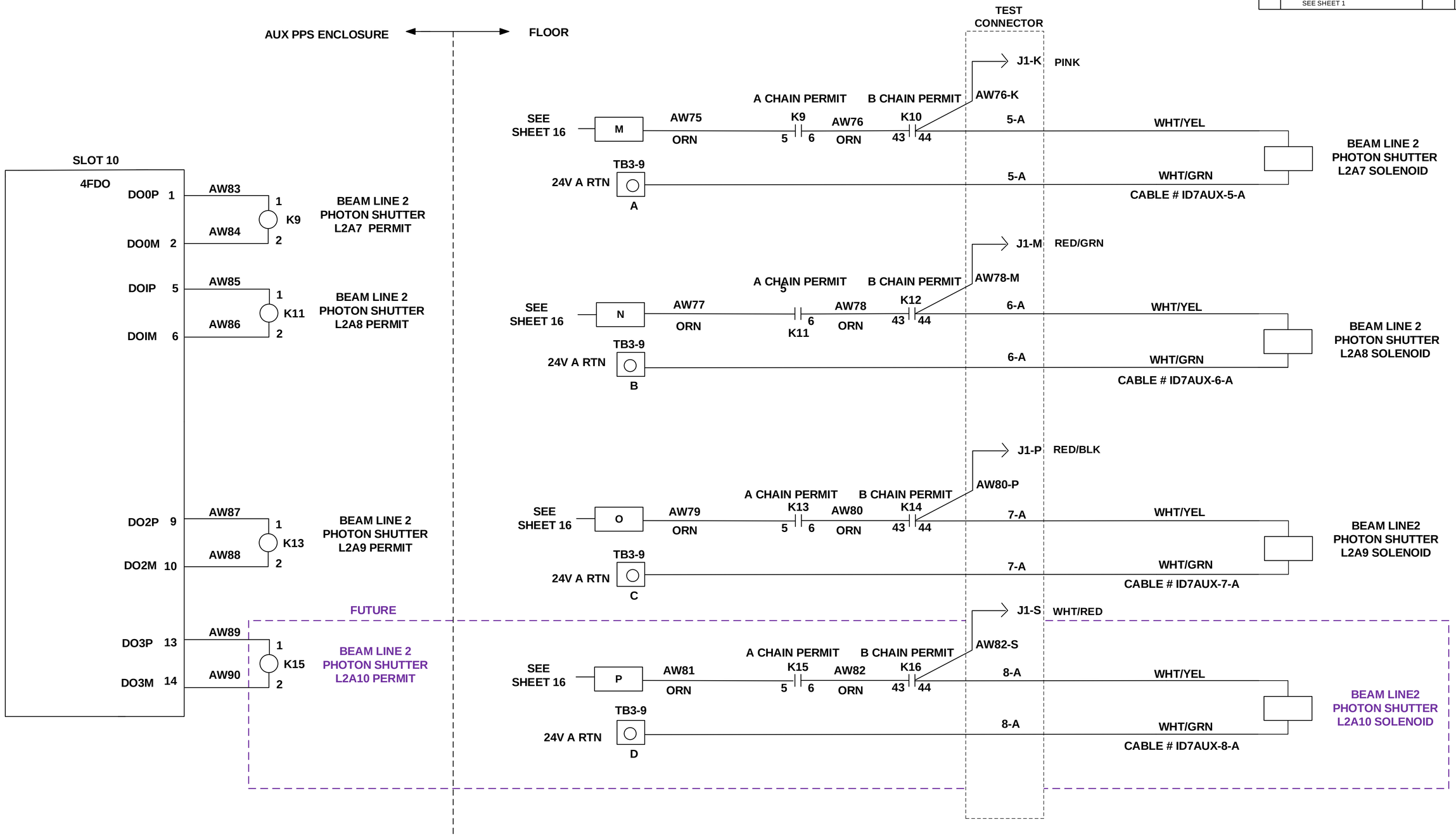

A

LT-EL-BL-EI (DRAWING DIRECTORY)	LT-EL-BL-EI-PPS-1070-90 (DRAWING NUMBER)	A (REV)
COMPUTER REPRODUCIBLE	SCALE: N/A	SHEET 11 OF 34

LT-EL-BL-EI-PPS-1070-90

REV	DESCRIPTION	DATE	BY	CHECKED	APP
	SEE SHEET 1				

BEAMLINE EPS

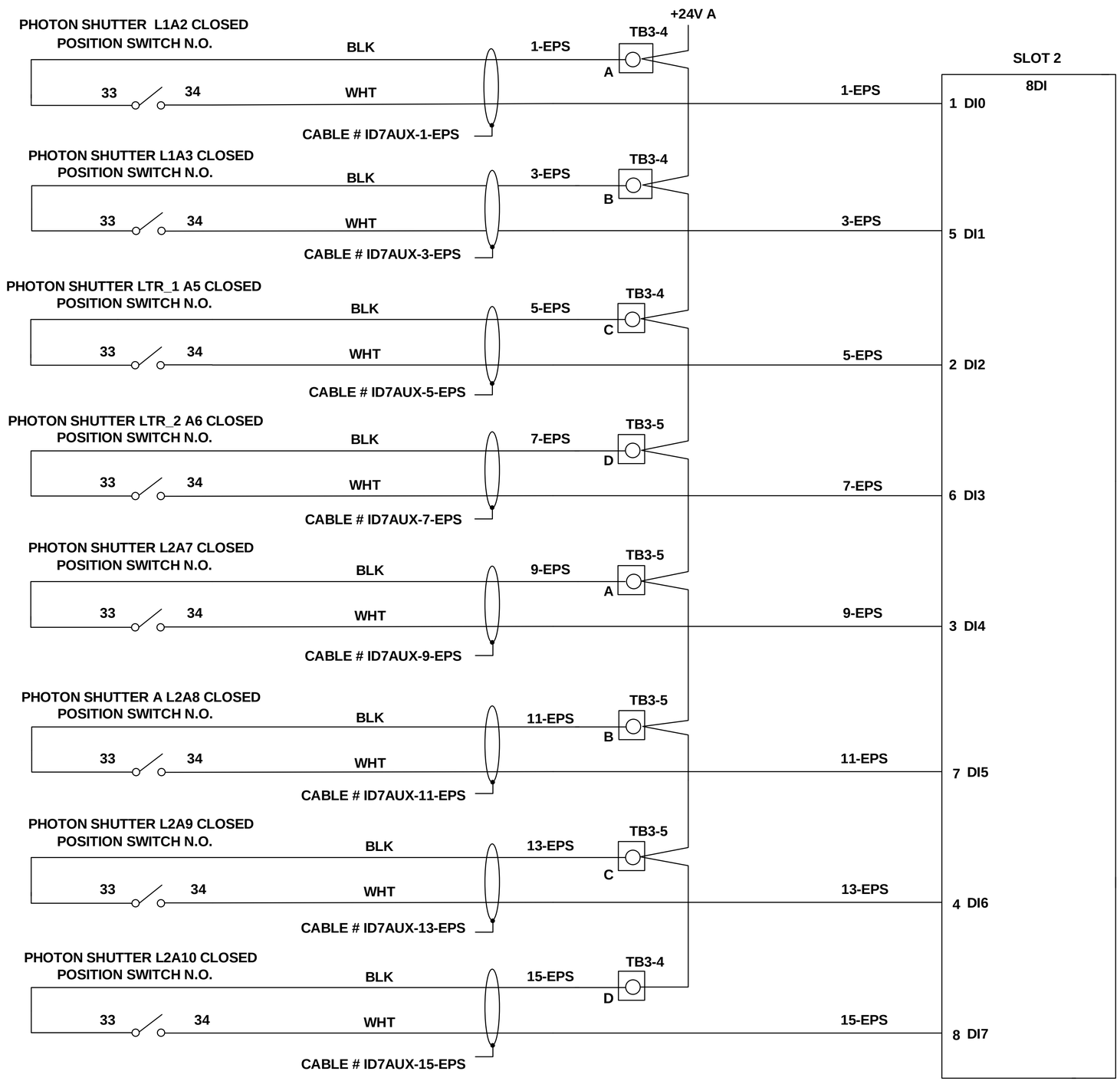

EPS

LT-EL-BL-EI-PPS-1070-90

LT-EL-BL-EI (DRAWING DIRECTORY)	LT-EL-BL-EI-PPS-1070-90 (DRAWING NUMBER)	A (REV)
COMPUTER REPRODUCIBLE	SCALE: N/A	SHEET 12 OF 34

REV	DESCRIPTION	DATE	BY	CHECKED	APP
	SEE SHEET 1				

BEAMLINE EPS

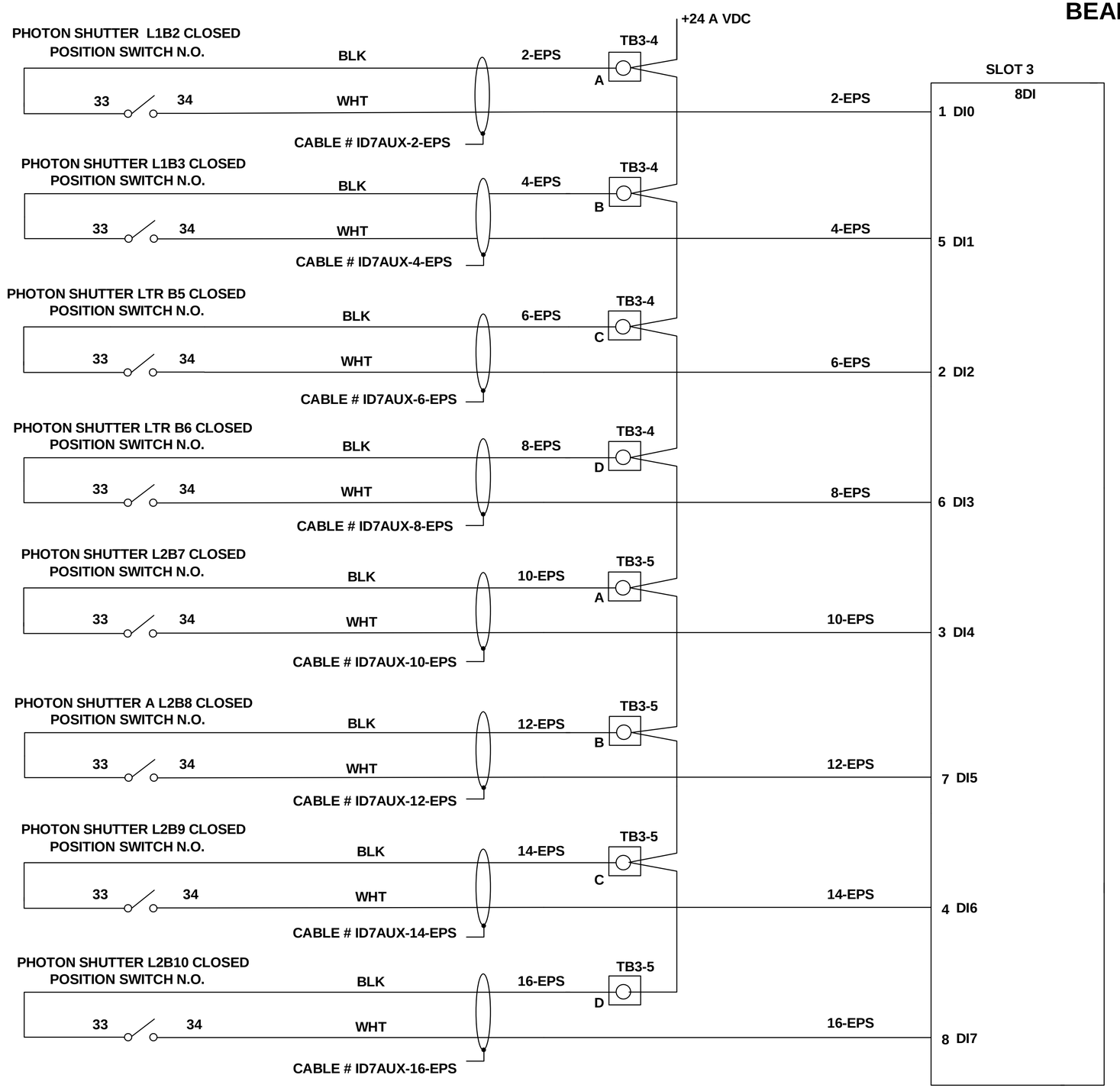

EPS

LT-EL-BL-EI-PPS-1070-90

LT-EL-BL-EI (DRAWING DIRECTORY)	LT-EL-BL-EI-PPS-1070-90 (DRAWING NUMBER)	A (REV)
COMPUTER REPRODUCIBLE	SCALE: N/A	SHEET 13 OF 34

REV	DESCRIPTION	DATE	BY	CHECKED	APP
	SEE SHEET 1				

BEAMLINE EPS

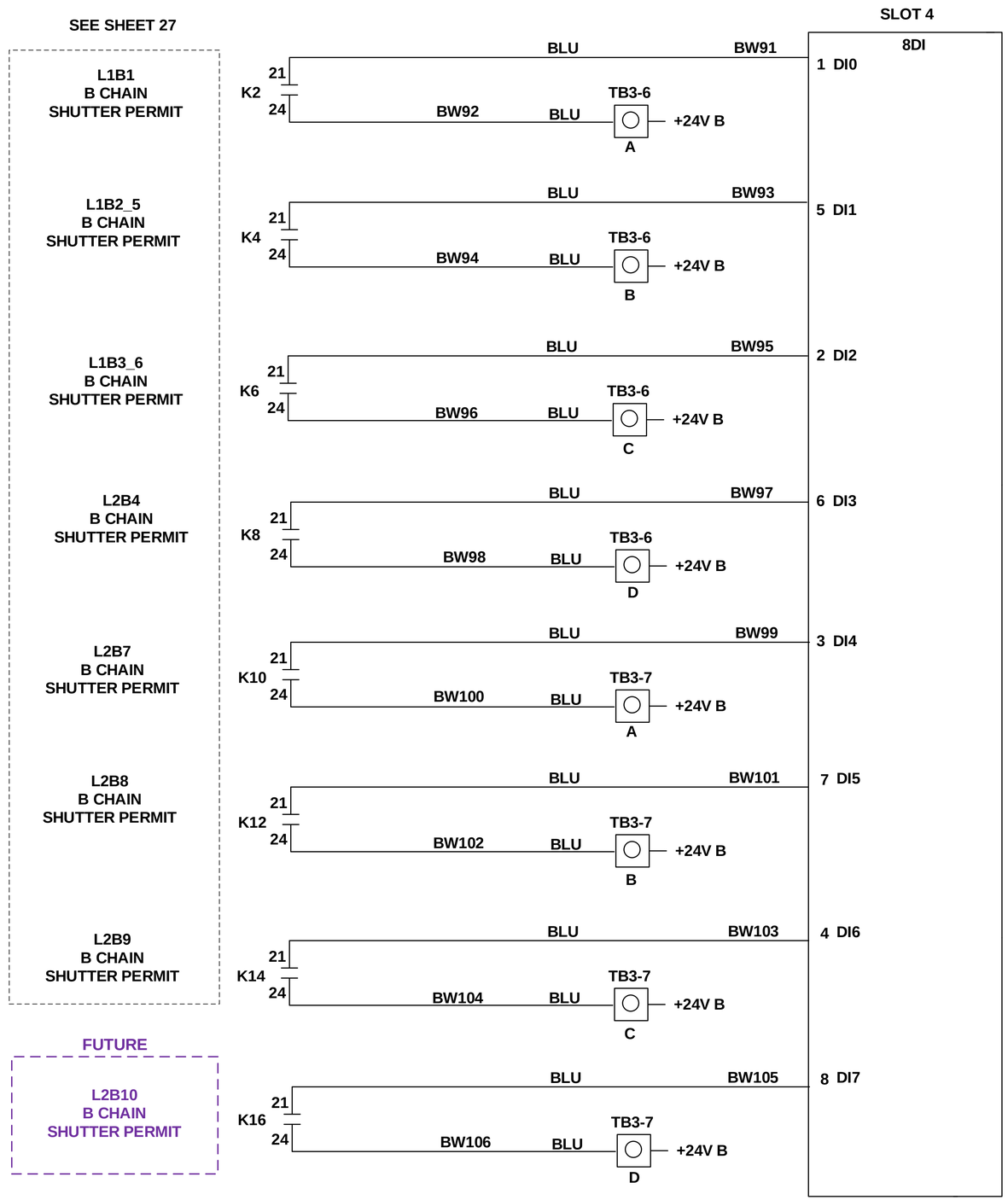

NOTES:

1.A CHAIN VACUUM PERMITS WILL BE SENT VIA DATA TRANSFER BETWEEN PPS AND C CHAIN.

2. B CHAIN AUX WATER PRMIT IS SENT FROM FOE, SEE LT-EL-BL-EI-PPS-1070-91, PAGE 19 & 31.

EPS

LT-EL-BL-EI-PPS-1070-90

LT-EL-BL-EI (DRAWING DIRECTORY)	LT-EL-BL-EI-PPS-1070-90 (DRAWING NUMBER)	A (REV)
COMPUTER REPRODUCIBLE	SCALE: N/A	SHEET 14 OF 34

REV	DESCRIPTION	DATE	BY	CHECKED	APP
	SEE SHEET 1				

BEAMLINE EPS

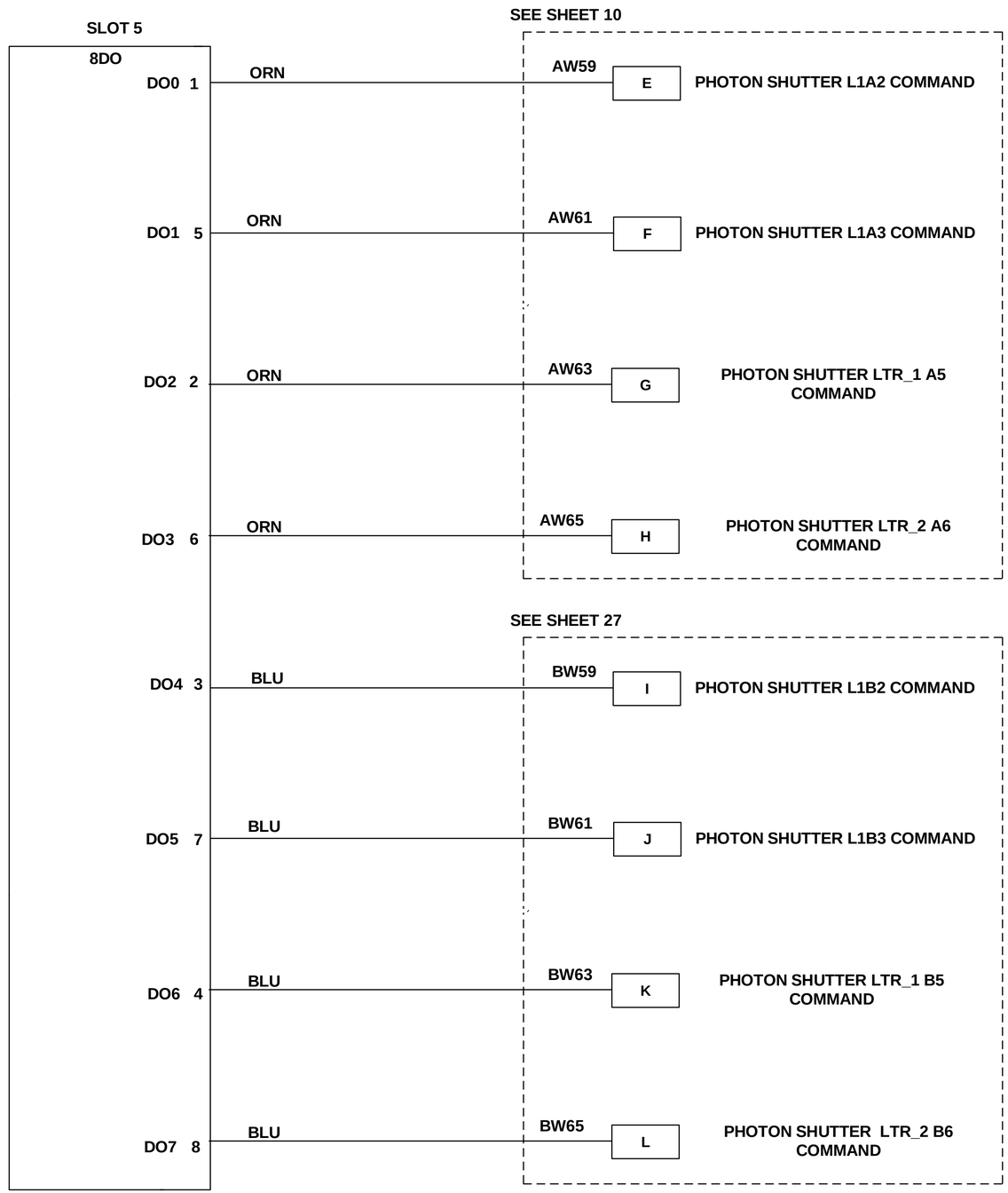

NOTES:

1. LTR_1 = Transfer Line 1
2. LTR_2 = Transfer Line 2

EPS
A

LT-EL-BL-EI-PPS-1070-90

LT-EL-BL-EI (DRAWING DIRECTORY)	LT-EL-BL-EI-PPS-1070-90 (DRAWING NUMBER)	A (REV)
COMPUTER REPRODUCIBLE	SCALE: N/A	SHEET 15 OF 34

REV	DESCRIPTION	DATE	BY	CHECKED	APP
	SEE SHEET 1				

BEAMLINE EPS

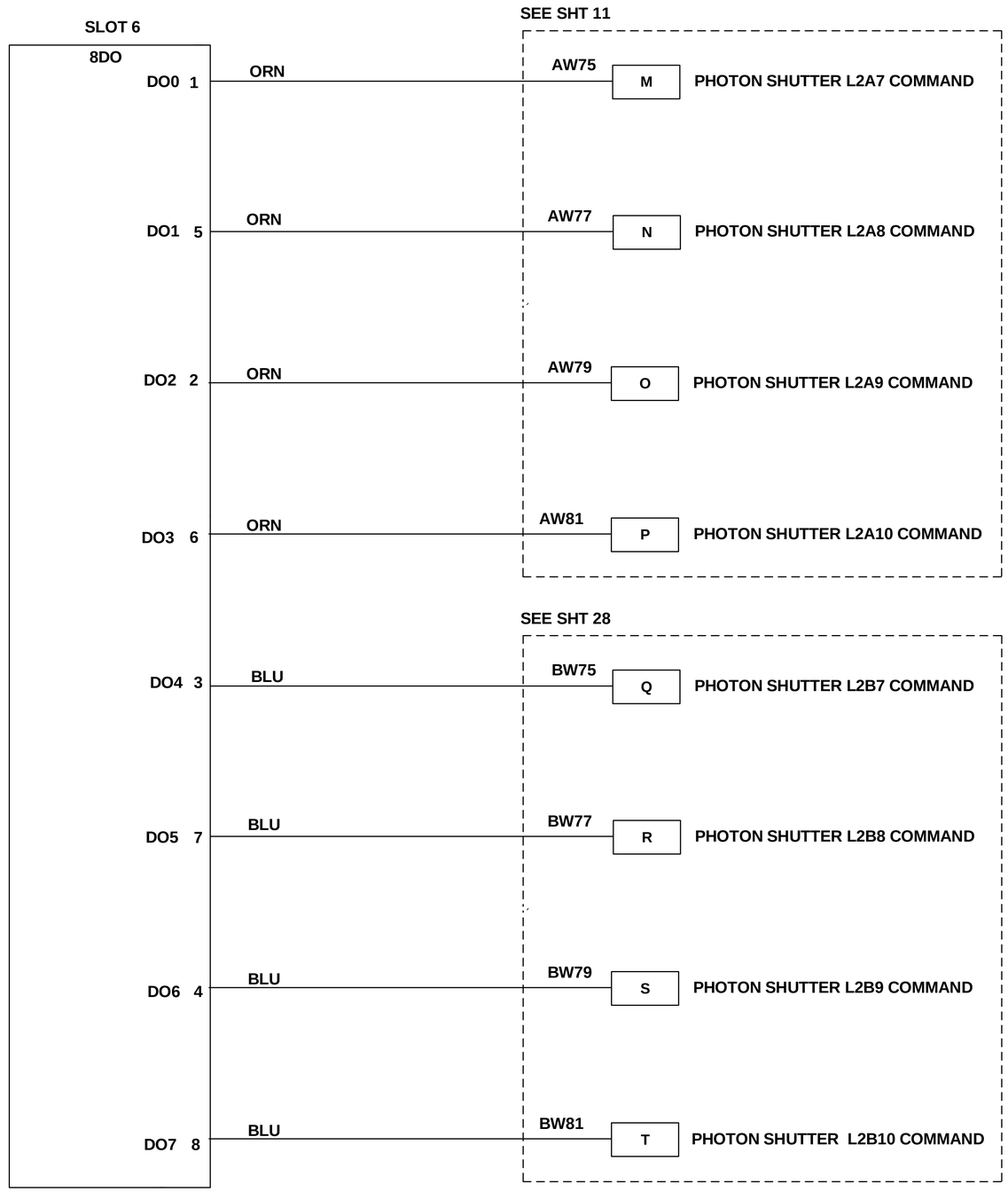

EPS
A

LT-EL-BL-EI-PPS-1070-90

LT-EL-BL-EI (DRAWING DIRECTORY)	LT-EL-BL-EI-PPS-1070-90 (DRAWING NUMBER)	A (REV)
COMPUTER REPRODUCIBLE	SCALE: N/A	SHEET 16 OF 34

REV	DESCRIPTION	DATE	BY	CHECKED	APP
	SEE SHEET 1				

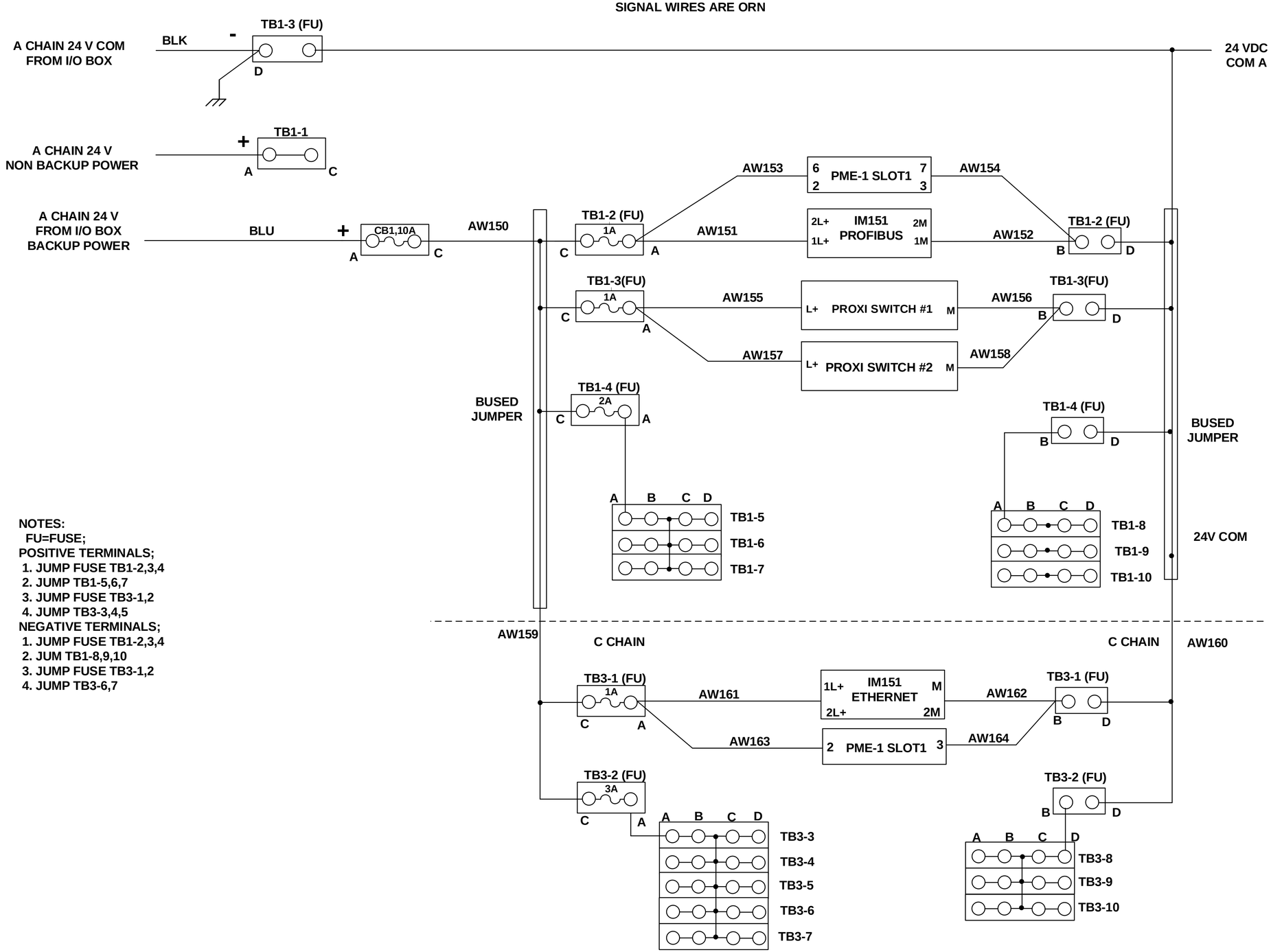

NOTES:
FU=FUSE;
POSITIVE TERMINALS;
1. JUMP FUSE TB1-2,3,4
2. JUMP TB1-5,6,7
3. JUMP FUSE TB3-1,2
4. JUMP TB3-3,4,5
NEGATIVE TERMINALS;
1. JUMP FUSE TB1-2,3,4
2. JUM TB1-8,9,10
3. JUMP FUSE TB3-1,2
4. JUMP TB3-6,7

POWER DISTRIBUTION A

LT-EL-BL-EI-PPS-1070-91

LT-EL-BL-EI (DRAWING DIRECTORY)	LT-EL-BL-EI-PPS-1070-91 (DRAWING NUMBER)	A (REV)
COMPUTER REPRODUCIBLE	SCALE: N/A	SHEET 17 OF 34

REV	DESCRIPTION	DATE	BY	CHECKED	APP
	SEE SHEET 1				

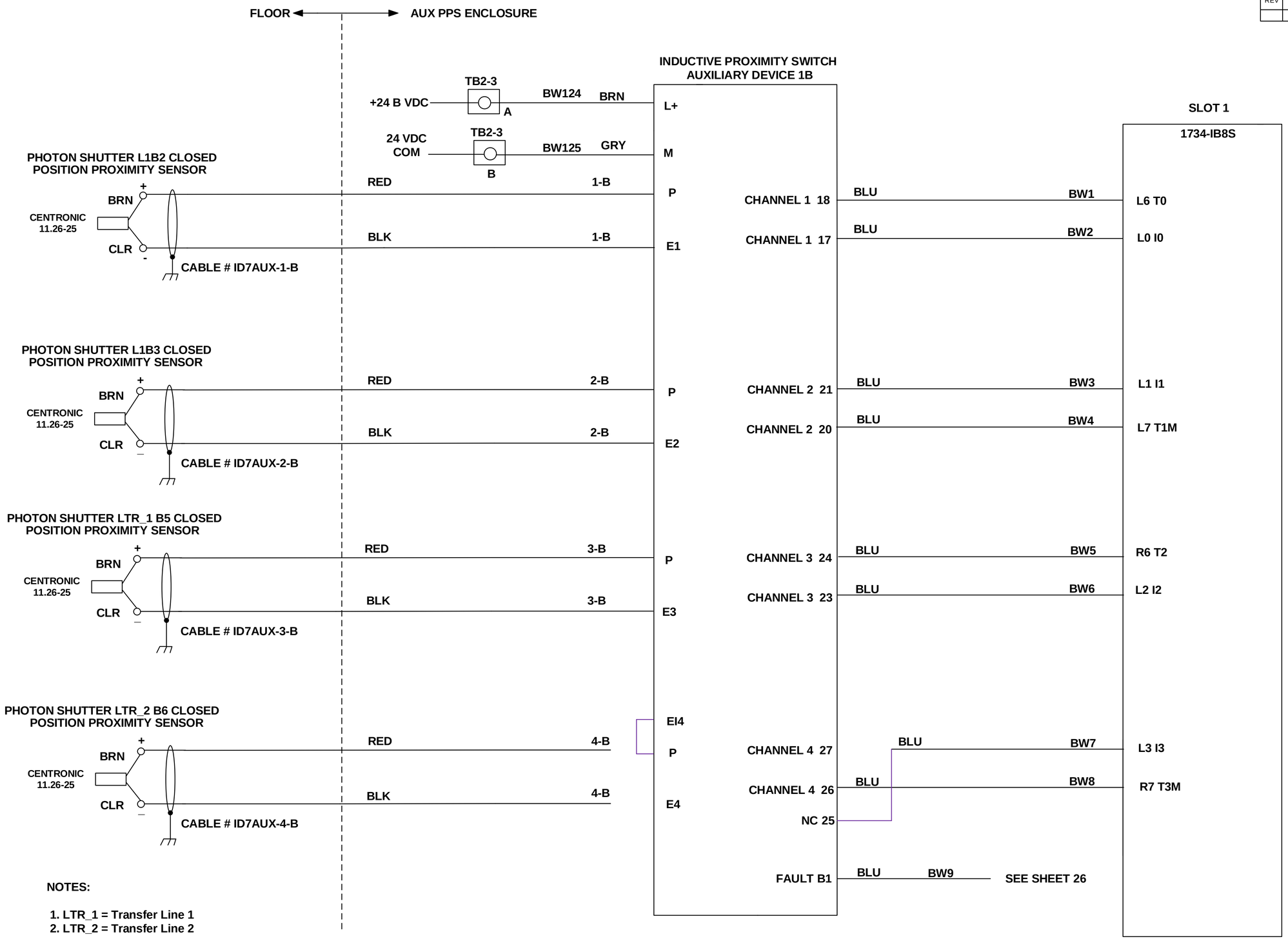

NOTES:

1. LTR_1 = Transfer Line 1
2. LTR_2 = Transfer Line 2

B

LT-EL-BL-EI-PPS-1070-90

LT-EL-BL-EI (DRAWING DIRECTORY)	LT-EL-BL-EI-PPS-1070-90 (DRAWING NUMBER)	A (REV)
COMPUTER REPRODUCIBLE	SCALE: N/A	SHEET 18 OF 34

REV	DESCRIPTION	DATE	BY	CHECKED	APP
A	INITIAL RELEASE	11/22/2016	SEJ	JM	SB

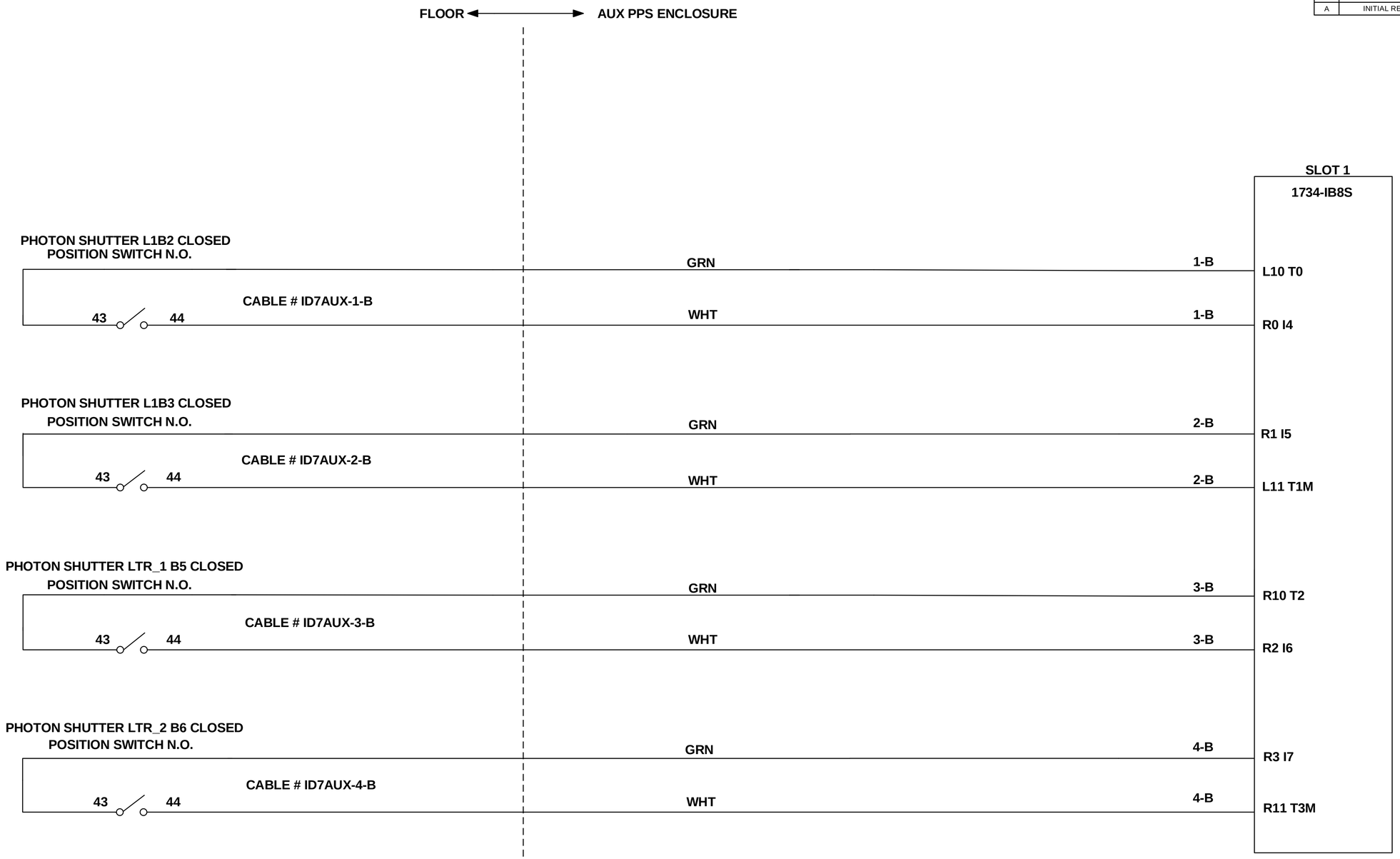

NOTES:

1. LTR_1 = Transfer Line 1
2. LTR_2 = Transfer Line 2

B

LT-EL-BL-EI	LT-EL-BL-EI-PPS-1070-90	A
DRAWING DIRECTORY	DRAWING NUMBER	REV

COMPUTER REPRODUCIBLE | SCALE: N/A | SHEET 19 OF 34

LT-EL-BL-EI-PPS-1070-90

REV	DESCRIPTION	DATE	BY	CHECKED	APP
	SEE SHEET 1				

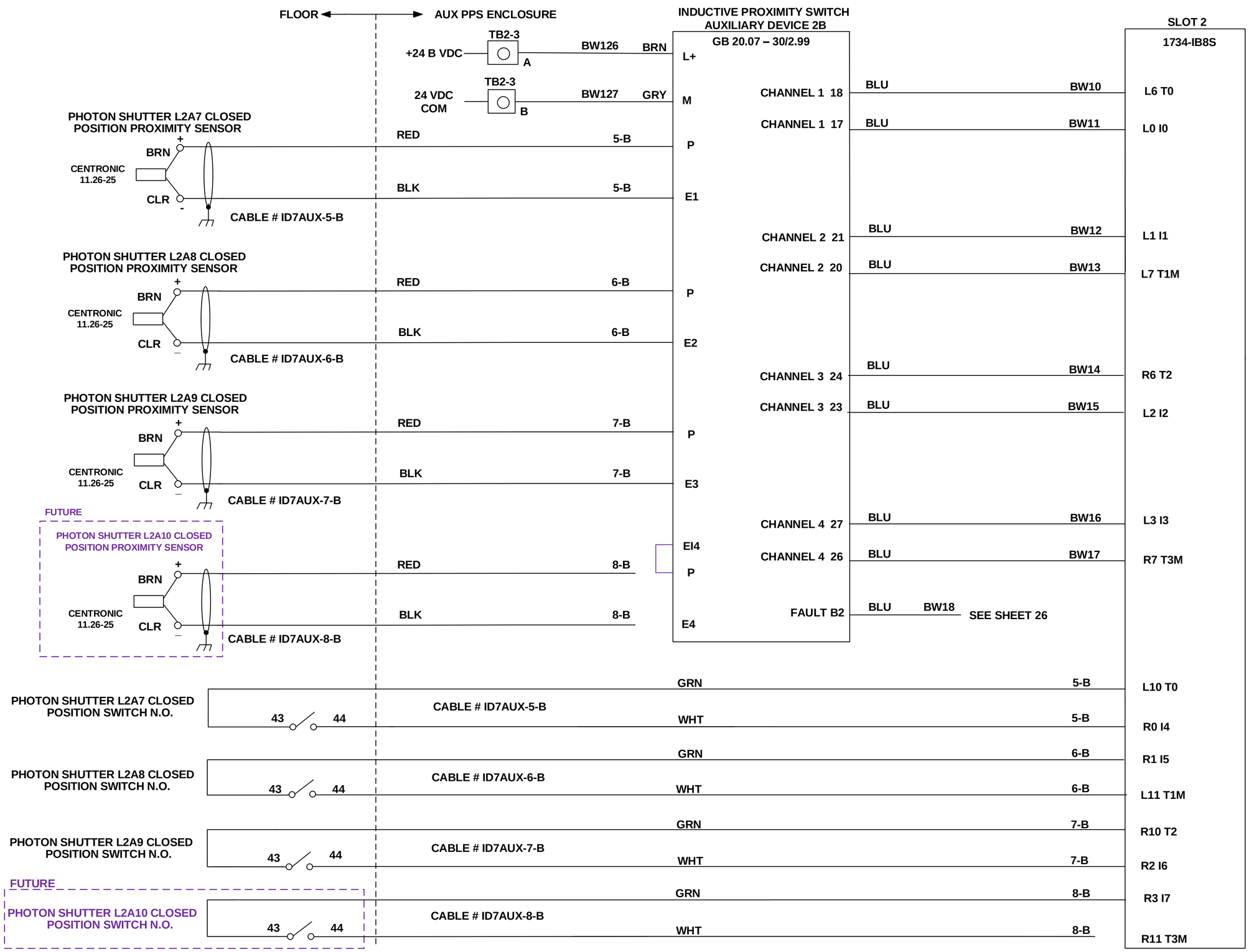

B

LT-EL-BL-EI	LT-EL-BL-EI-PPS-1070-90	A
DRAWING DIRECTORY	DRAWING NUMBER	REV

COMPUTER REPRODUCIBLE | SCALE: N/A | SHEET 20 OF 34

LT-EL-BL-EI-PPS-1070-90

REV	DESCRIPTION	DATE	BY	CHECKED	APP
	SEE SHEET 1				

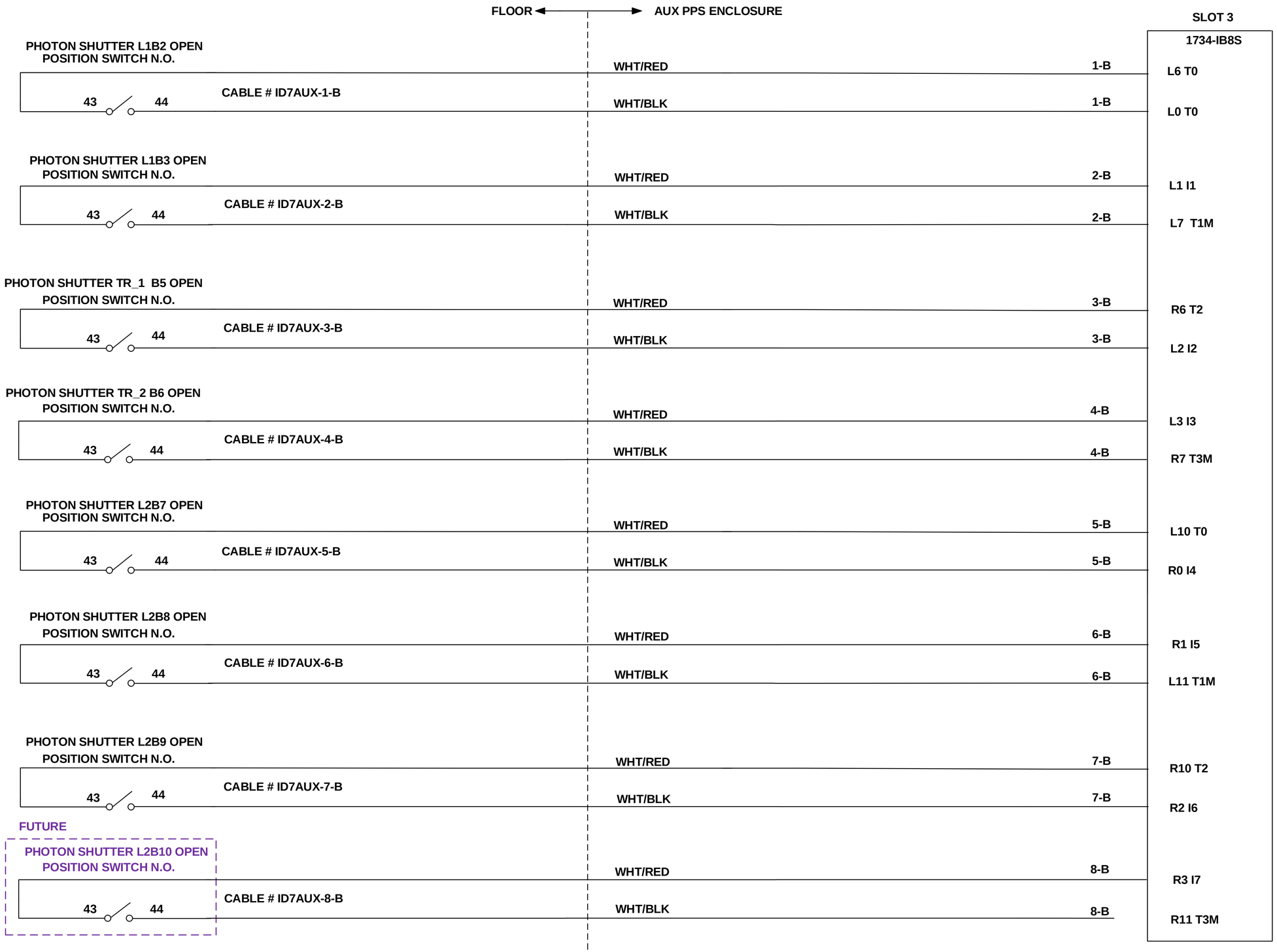

NOTES:

1. LTR_1 = Transfer Line 1
2. LTR_2 = Transfer Line 2

B

LT-EL-BL-EI-PPS-1070-90

LT-EL-BL-EI (DRAWING DIRECTORY)	LT-EL-BL-EI-PPS-1070-90 (DRAWING NUMBER)	A (REV)
COMPUTER REPRODUCIBLE	SCALE: N/A	SHEET 21 OF 34

REV	DESCRIPTION	DATE	BY	CHECKED	APP
	SEE SHEET 1				

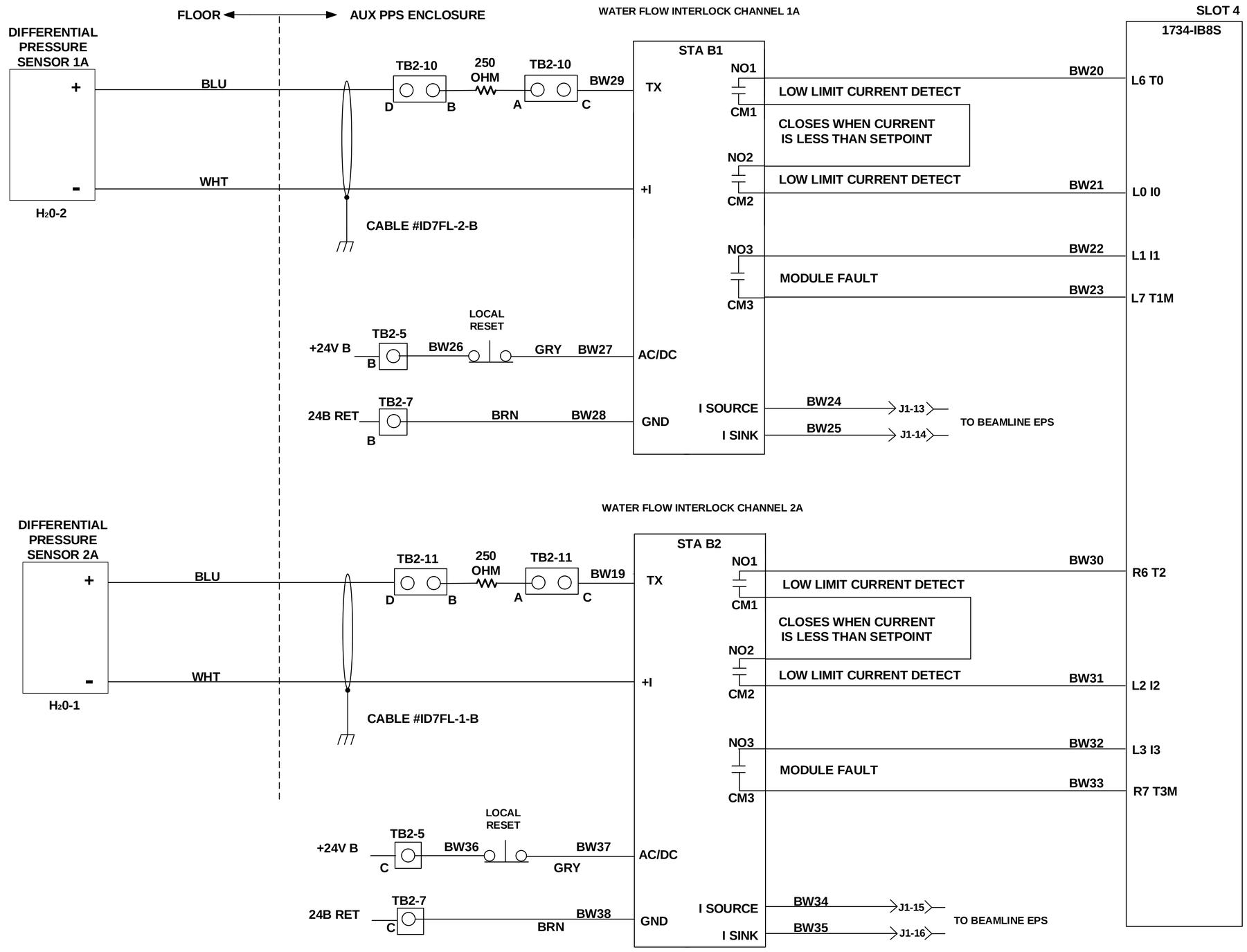

STA DEVICE PARAMETER CONFIGURATION		
DEVICE NAME / LOCATION:	STA_AUX B1 ID7	
MODEL :	STA/HLPRG/3PRG/24DC/-AO[DIN]	
INPUT		
Measurement Type:	Current	
Input Range:	Zero: 4.0 mA, Full: 20 mA	
Filter Settings:	60 Hz	
Broken wire:	Enable	
TRIMMING	Disable	
SCALING	Zero: 0.0, Full: 1.5 GPM	
DISPLAY		
Display Source:	Process Variable (PV)	
Precision:	Auto	
ALARMS	ALARM 1	ALARM 2
Mode:	Low Trip	Hi Trip
Latching:	Off	Off
Trip point:	0.6 GPM	0.0 GPM
Dead Band:	0.0 GPM	0.0 GPM
Delay:	0 s	0 s
ANALOG OUTPUT		
Mode:	Current	
Fail mode:	Fail Low	
AO Range:	Zero: 4.0, Full: 20.0 mA	
Damping:	Disable (0.0 s)	

STA DEVICE PARAMETER CONFIGURATION		
DEVICE NAME / LOCATION:	STA_AUX B2 ID7	
MODEL :	STA/HLPRG/3PRG/24DC/-AO[DIN]	
INPUT		
Measurement Type:	Current	
Input Range:	Zero: 4.0 mA, Full: 20 mA	
Filter Settings:	60 Hz	
Broken wire:	Enable	
TRIMMING	Disable	
SCALING	Zero: 0.0, Full: 2.61 GPM	
DISPLAY		
Display Source:	Process Variable (PV)	
Precision:	Auto	
ALARMS	ALARM 1	ALARM 2
Mode:	Low Trip	Hi Trip
Latching:	Off	Off
Trip point:	0.5 GPM	0.0 GPM
Dead Band:	0.0 GPM	0.0 GPM
Delay:	0 s	0 s
ANALOG OUTPUT		
Mode:	Current	
Fail mode:	Fail Low	
AO Range:	Zero: 4.0, Full: 20.0 mA	
Damping:	Disable (0.0 s)	

B

LT-EL-BL-EI-PPS-1120-91

LT-EL-BL-EI (DRAWING DIRECTORY)	LT-EL-BL-EI-PPS-1120-91 (DRAWING NUMBER)	A (REV)
COMPUTER REPRODUCABLE	SCALE: N/A	SHEET 22 OF 34

REV	DESCRIPTION	DATE	BY	CHECKED	APP
	SEE SHEET 1				

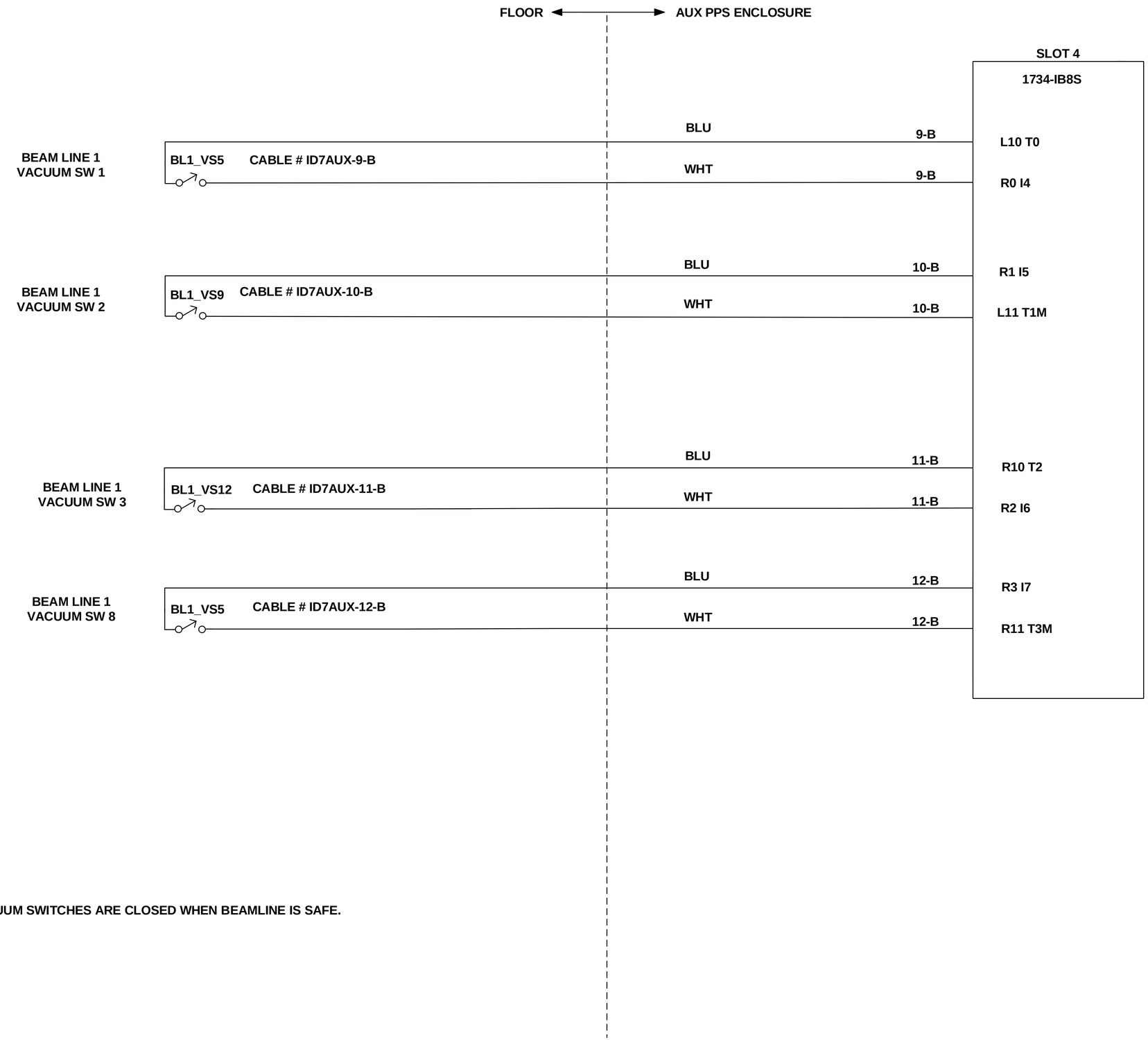

NOTES:

1. VACUUM SWITCHES ARE CLOSED WHEN BEAMLINE IS SAFE.

B

LT-EL-BL-EI (DRAWING DIRECTORY)	LT-EL-BL-EI-PPS-1070-90 (DRAWING NUMBER)	A (REV)
COMPUTER REPRODUCIBLE	SCALE: N/A	SHEET 23 OF 34

LT-EL-BL-EI-PPS-1070-91

REV	DESCRIPTION	DATE	BY	CHECKED	APP
	SEE SHEET 1				

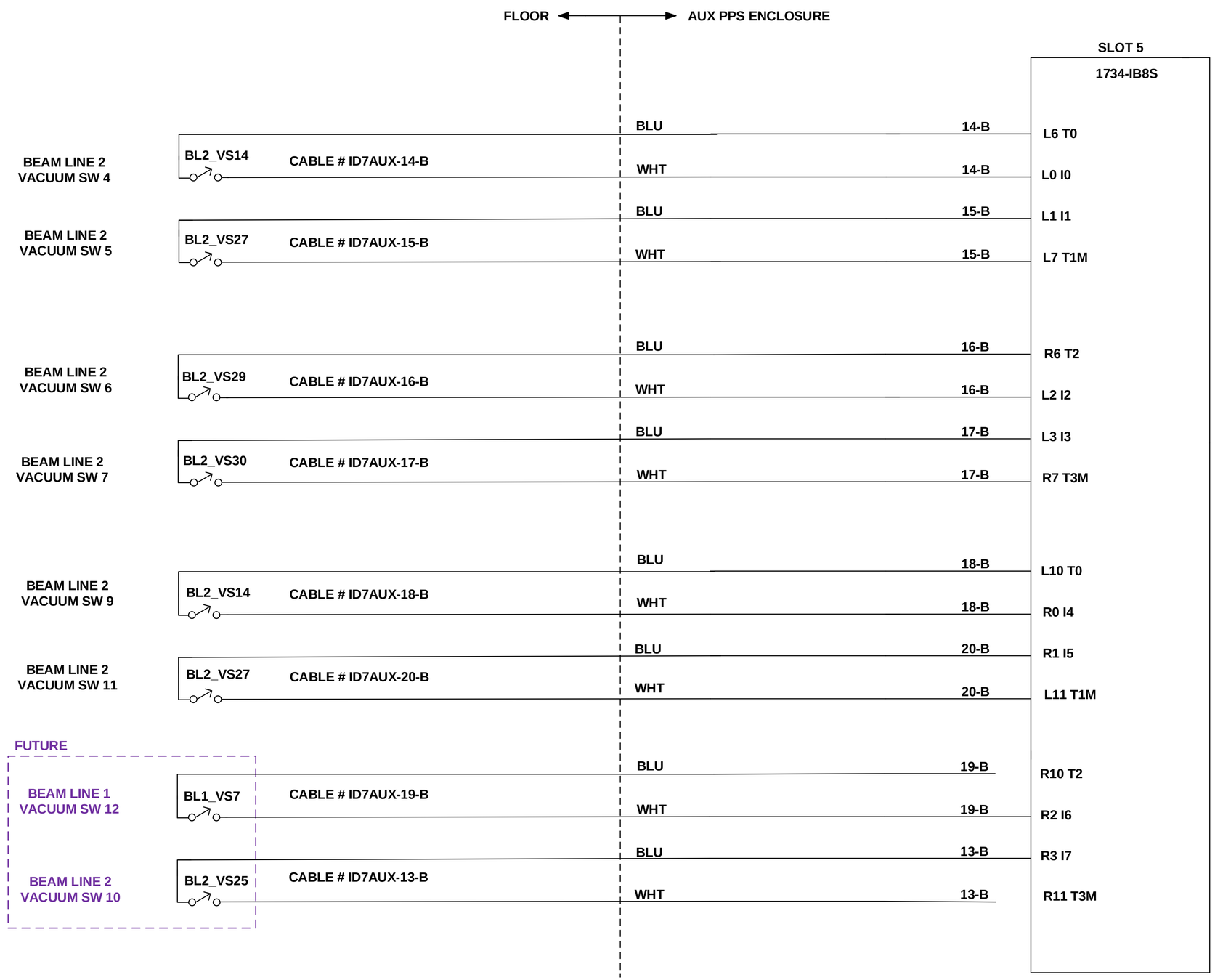

NOTES:
1. VACUUM SWITCHES ARE CLOSED WHEN BEAMLINE IS SAFE.

B

LT-EL-BL-EI-PPS-1070-90

LT-EL-BL-EI (DRAWING DIRECTORY)	LT-EL-BL-EI-PPS-1070-90 (DRAWING NUMBER)	A (REV)
COMPUTER REPRODUCIBLE	SCALE: N/A	SHEET 24 OF 34

REV	DESCRIPTION	DATE	BY	CHECKED	APP
	SEE SHEET 1				

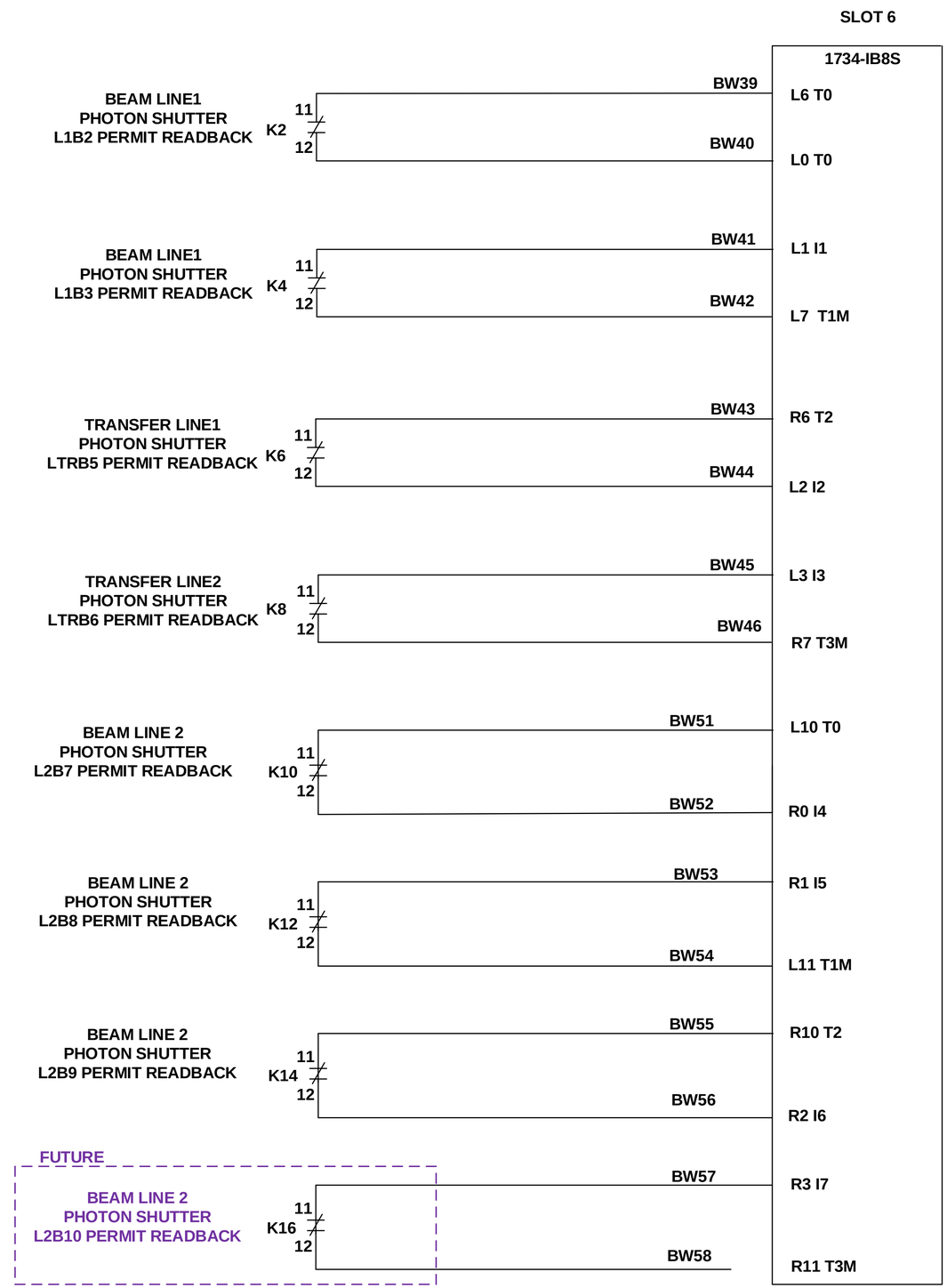

B

LT-EL-BL-EI	LT-EL-BL-EI-PPS-1070-90	A
DRAWING DIRECTORY	DRAWING NUMBER	REV

COMPUTER REPRODUCIBLE | SCALE: N/A | SHEET 25 OF 34

LT-EL-BL-EI-PPS-1070-90

REV	DESCRIPTION	DATE	BY	CHECKED	APP
	SEE SHEET 1				

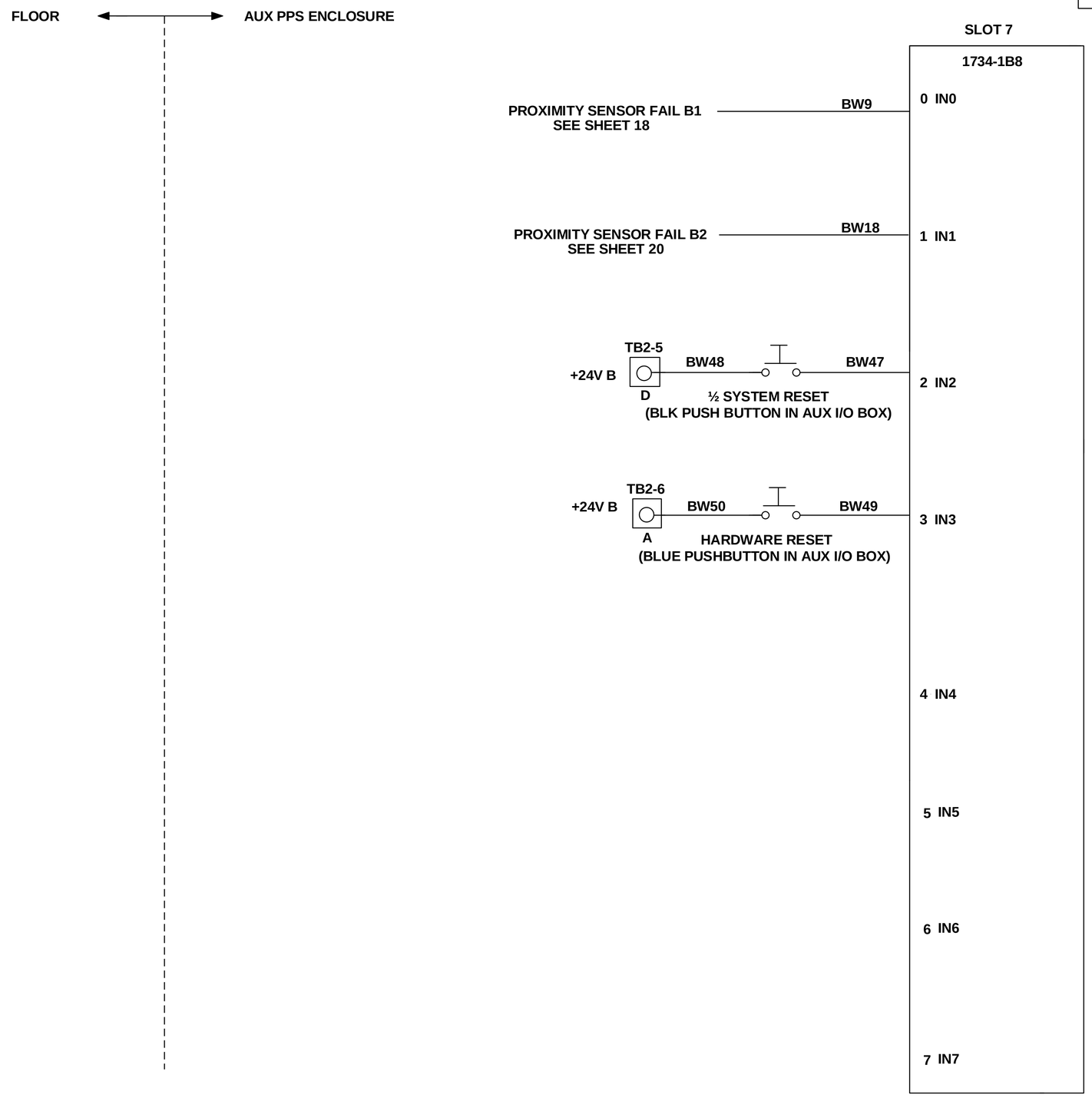

B

LT-EL-BL-EI	LT-EL-BL-EI-PPS-1070-91	A
DRAWING DIRECTORY	DRAWING NUMBER	REV

COMPUTER REPRODUCIBLE | SCALE: N/A | SHEET 26 OF 35

LT-EL-BL-EI-PPS-1070-91

REV	DESCRIPTION	DATE	BY	CHECKED	APP
	SEE SHEET 1				

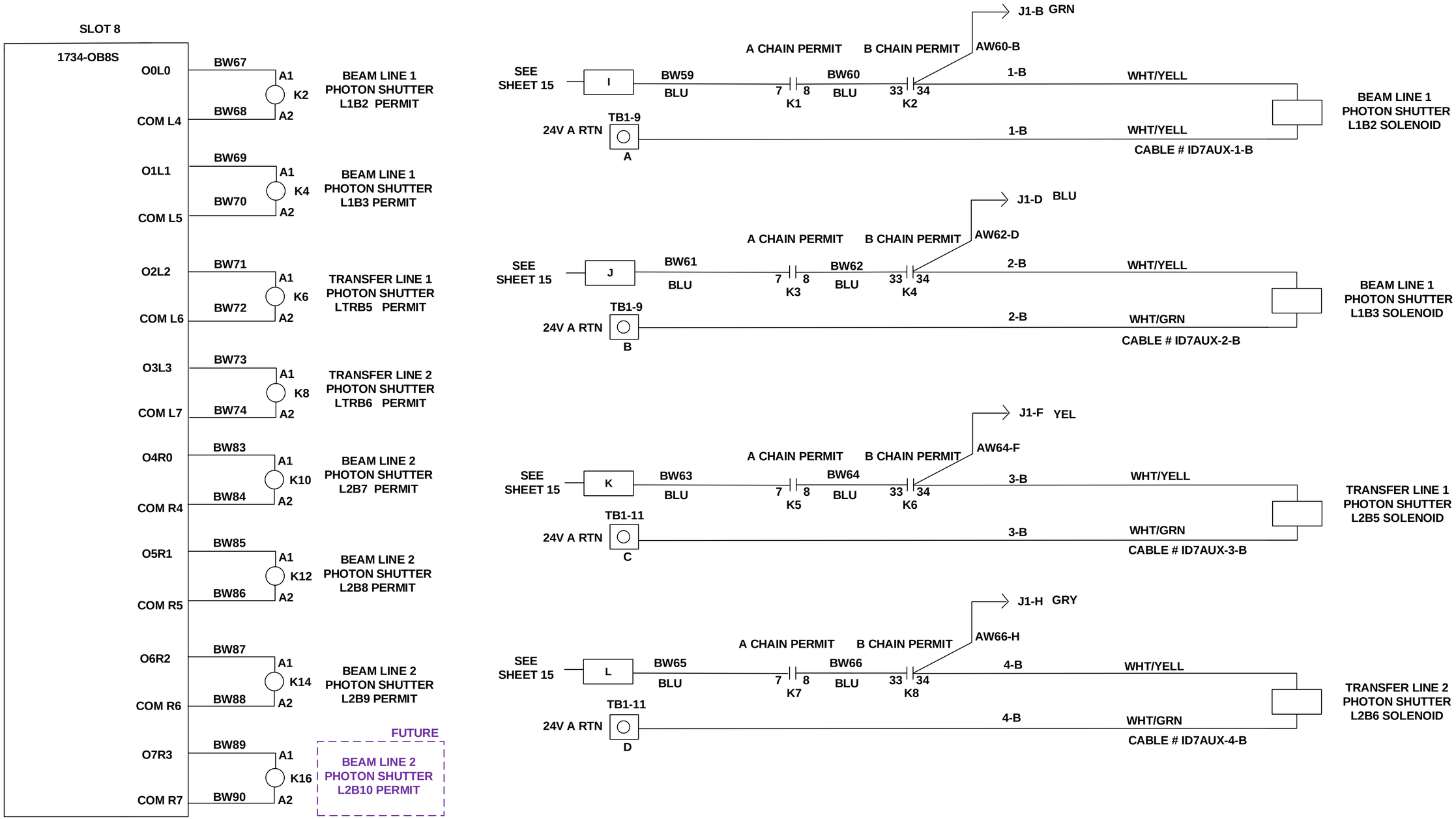

B

LT-EL-BL-EI	LT-EL-BL-EI-PPS-1070-90	A
DRAWING DIRECTORY	DRAWING NUMBER	REV

COMPUTER REPRODUCIBLE | SCALE: N/A | SHEET 27 OF 34

LT-EL-BL-EI-PPS-1070-90

REV	DESCRIPTION	DATE	BY	CHECKED	APP
	SEE SHEET 1				

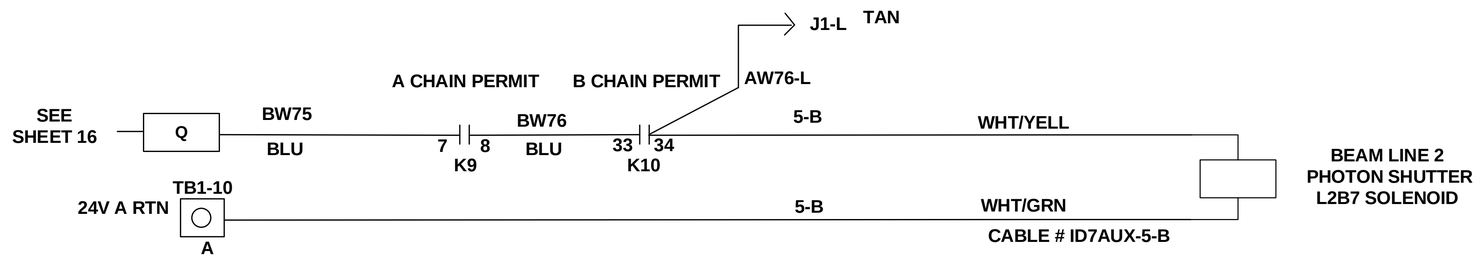

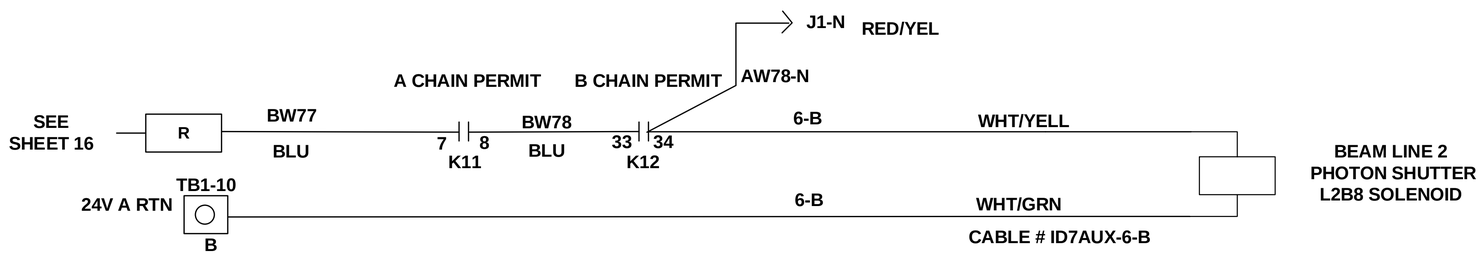

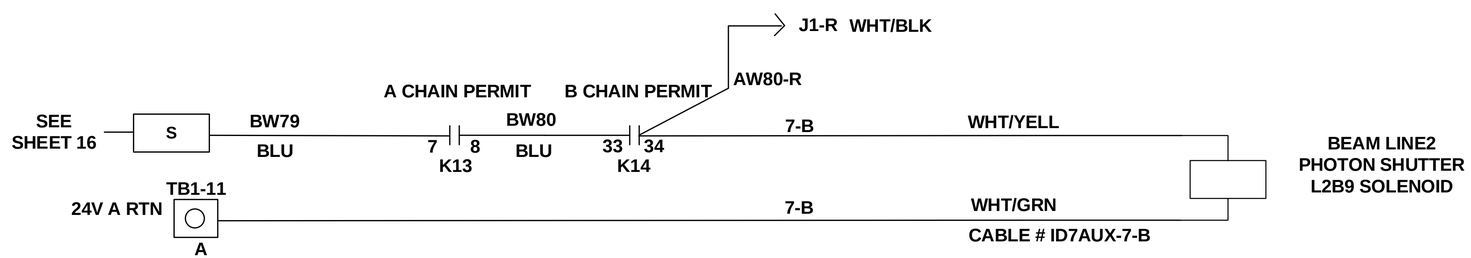

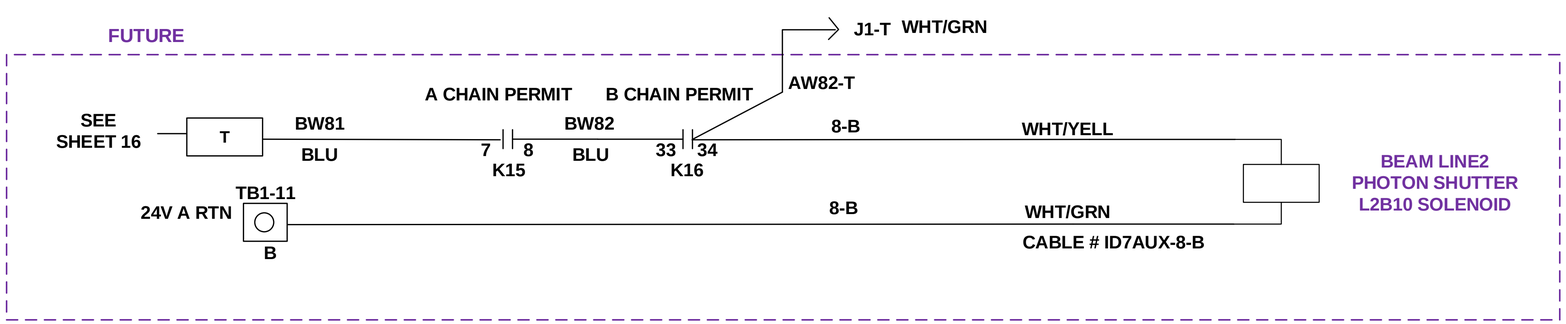

B

LT-EL-BL-EI (DRAWING DIRECTORY)	LT-EL-BL-EI-PPS-1070-90 (DRAWING NUMBER)	A (REV)
COMPUTER REPRODUCIBLE	SCALE: N/A	SHEET 28 OF 34

LT-EL-BL-EI-PPS-1070-90

REV	DESCRIPTION	DATE	BY	CHECKED	APP
	SEE SHEET 1				

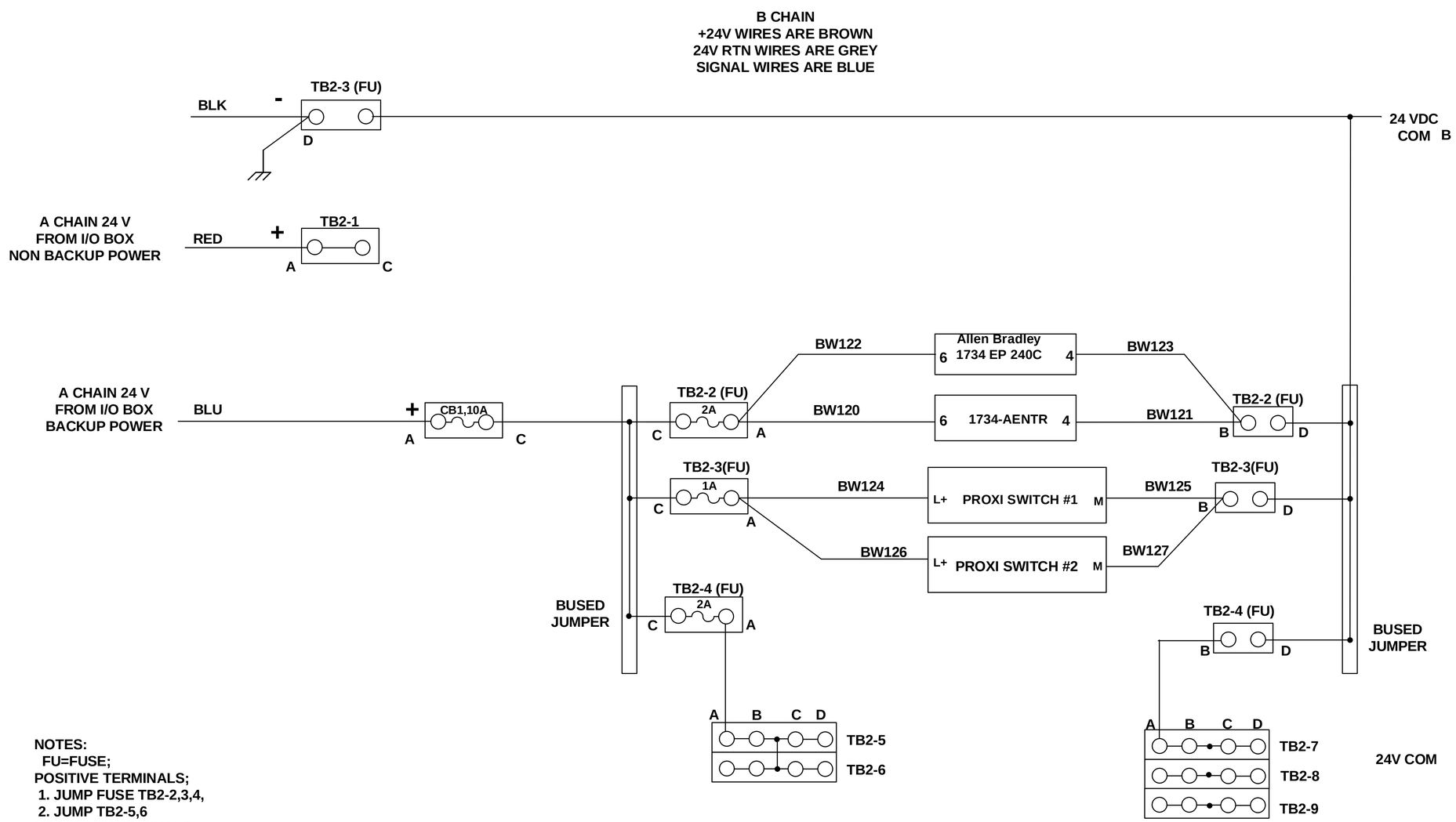

NOTES:
FU=FUSE;
POSITIVE TERMINALS;
1. JUMP FUSE TB2-2,3,4,
2. JUMP TB2-5,6
NEGATIVE TERMINALS;
1. JUMP FUSE TB2-2,3,4

POWER DISTRIBUTION B

LT-EL-BL-EI	LT-EL-BL-EI-PPS-1070-91	A
DRAWING DIRECTORY	DRAWING NUMBER	REV

COMPUTER REPRODUCIBLE | SCALE: N/A | SHEET 29 OF 34

LT-EL-BL-EI-PPS-1070-91

REV	DESCRIPTION	DATE	BY	CHECKED	APP
	SEE SHEET 1				

A CHAIN

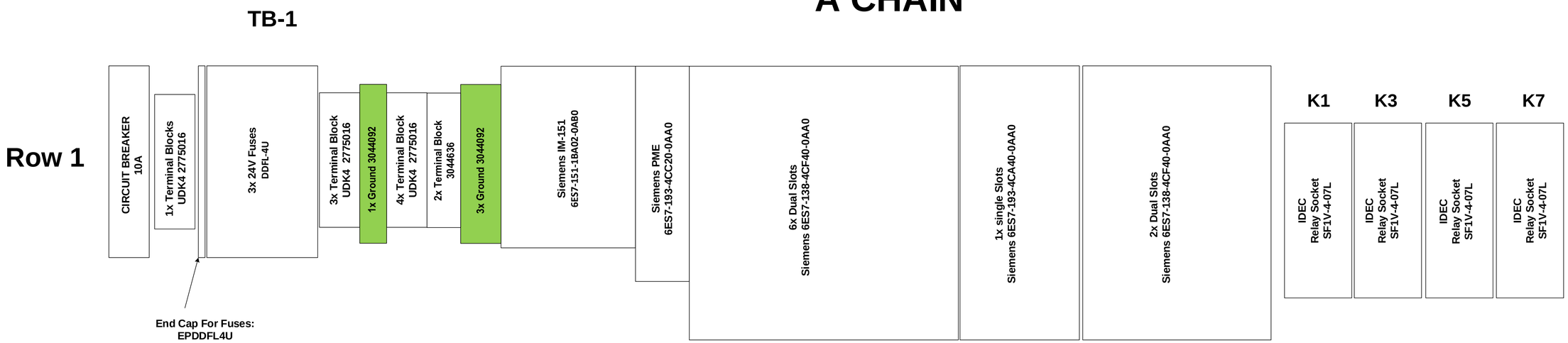

B CHAIN

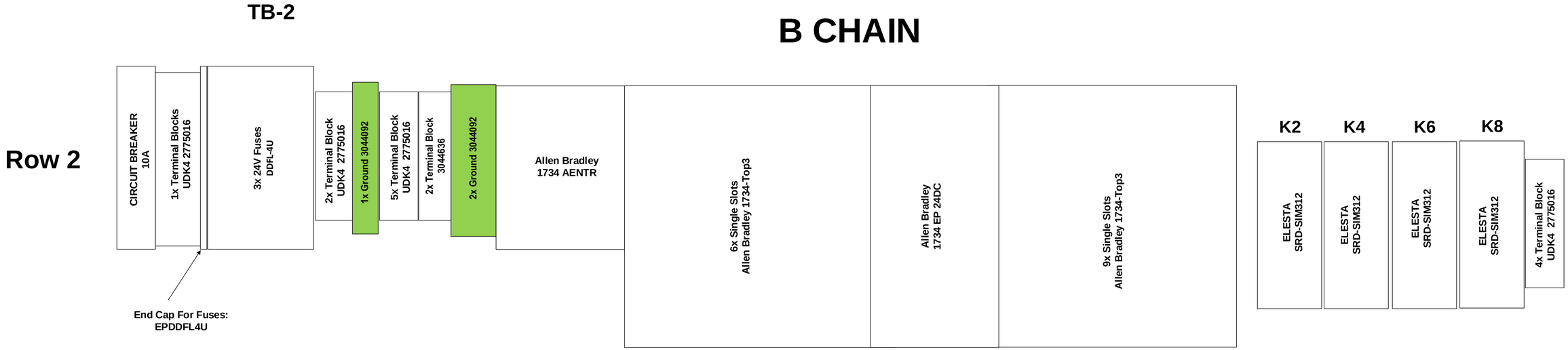

LT-EL-BL-EI-PPS-1070-90

LT-EL-BL-EI (DRAWING DIRECTORY)	LT-EL-BL-EI-PPS-1070-90 (DRAWING NUMBER)	A (REV)
COMPUTER REPRODUCIBLE	SCALE: N/A	SHEET 30 OF 34

REV	DESCRIPTION	DATE	BY	CHECKED	APP
	SEE SHEET 1				

A CHAIN

A CHAIN

B CHAIN

Row 3

K9	K11	K13	K15	INDUCTIVE PROXIMITY SWITCH AUXILIARY DEVICE 1	INDUCTIVE PROXIMITY SWITCH AUXILIARY DEVICE 2	STA A1	STA A2	K10	K12	K14	K16
IDEC Relay Socket SF1V-4-07L	IDEC Relay Socket SF1V-4-07L	IDEC Relay Socket SF1V-4-07L	IDEC Relay Socket SF1V-4-07L	KLASCHKA ZSS4/a00ca-1.62	KLASCHKA ZSS4/a00ca-1.62	Thermocouple Safety Trip Alarm-Moore: STA/HLPRG/3PRG/24DC-AO	Thermocouple Safety Trip Alarm-Moore: STA/HLPRG/3PRG/24DC-AO	ELESTA SRD-SIM312	ELESTA SRD-SIM312	ELESTA SRD-SIM312	ELESTA SRD-SIM312

3x Ground#3044092

B CHAIN

TB-3

C CHAIN

Row 4

2x 24V Fuses DDFL-4U	5x Terminal Blocks UDK4 2775016	1x Ground 3044092	3x Terminal Blocks UDK4 2775016	3x Ground 3044092	Siemens IM 151-3PN 6ES7-151-3BA23-0AB0	Siemens PME 6ES7-193-4CC20-0AA0	5x Single Slot Siemens 6ES7-193-4CA40-0AA0	INDUCTIVE PROXIMITY SWITCH AUXILIARY DEVICE 1	INDUCTIVE PROXIMITY SWITCH AUXILIARY DEVICE 2	STA B1	STA B2
								KLASCHKA ZSS4/a00ca-1.62	KLASCHKA ZSS4/a00ca-1.62	Thermocouple Safety Trip Alarm-Moore: STA/HLPRG/3PRG/24DC-AO	Thermocouple Safety Trip Alarm-Moore: STA/HLPRG/3PRG/24DC-AO

End Cap For Fuses: EPDDFL4U

UDK4 End Cover 2775113

LT-EL-BL-EI-PPS-1070-90

DRAWING DIRECTORY	DRAWING NUMBER	REV
LT-EL-BL-EI	LT-EL-BL-EI-PPS-1070-90	A

COMPUTER REPRODUCIBLE | SCALE: N/A | SHEET 31 OF 34

REV	DESCRIPTION	DATE	BY	CHECKED	APP
	SEE SHEET 1				

ROW 1:				
24V PWR TB	[11]	1>3 [7]	[5]	
TB 1A	[5]	[6]	>4 [8]	>6 [7]
SLOT	MODULE	SOCKET	DESCRIPTION	VENDOR
	[5]			
	6ES7-151-1BA02-0AB0	N/A	IM 151	SIEMENS
1	6ES7-138-4CA50-0AB0	6ES7-193-4CC20-0AA0	POWER MODULE PM-E	SIEMENS
2	6ES7-138-4FA04-0AB0	6ES7-138-4CF40-0AA0	4/8 FDI 8 SAFE IN	SIEMENS
3	6ES7-138-4FA04-0AB0	6ES7-138-4CF40-0AA0	4/8 FDI 8 SAFE IN	SIEMENS
4	6ES7-138-4FA04-0AB0	6ES7-138-4CF40-0AA0	4/8 FDI 8 SAFE IN	SIEMENS
5	6ES7-138-4FA04-0AB0	6ES7-138-4CF40-0AA0	4/8 FDI 8 SAFE IN	SIEMENS
6	6ES7-138-4FA04-0AB0	6ES7-138-4CF40-0AA0	4/8 FDI 8 SAFE IN	SIEMENS
7	6ES7-131-4BF00-0AB0	6ES7-193-4CA40-0AA0	8 DI	SIEMENS
8	6ES7-131-4BF00-0AB0	6ES7-193-4CA40-0AA0	8 DI	SIEMENS
9	6ES7-138-4FB03-0AB0	6ES7-138-4CF40-0AA0	4/8 FDO	SIEMENS
10	6ES7-138-4FB03-0AB0	6ES7-138-4CF40-0AA0	4/8 FDO	SIEMENS
K1	RF 1V-3A1B-D24	SF1V-4-07L	IDEC RELAY	IDEC
K3	RF 1V-3A1B-D24	SF1V-4-07L	IDEC RELAY	IDEC
K5	RF 1V-3A1B-D24	SF1V-4-07L	IDEC RELAY	IDEC
K7	RF 1V-3A1B-D24	SF1V-4-07L	IDEC RELAY	IDEC
K9	RF 1V-3A1B-D24	SF1V-4-07L	IDEC RELAY	IDEC
ROW 2:				
24V PWR TB	[11]	1>3 [7]	[5]	
TB 2B	[5]	[6]	>3 [8]	4 [7]
SLOT	MODULE	SOCKET	DESCRIPTION	VENDOR
	1734 AENTR	N/A	2 PORT ETHERNET ADAPTER	AB
1	1734-IB8S	1734-TOP3 X2	8 INPUT SAFETY	AB
2	1734-IB8S	1734-TOP3 X2	8 INPUT SAFETY	AB
3	1734-IB8S	1734-TOP3 X2	8 INPUT SAFETY	AB
	1734 EP24DC	N/A	DC EXPANSION PWR SUPPLY	AB
4	1734-IB8S	1734-TOP3 X2	8 INPUT SAFETY	AB
5	1734-IB8S	1734-TOP3 X2	8 INPUT SAFETY	AB
6	1734-IB8S	1734-TOP3 X2	8 INPUT SAFETY	AB
7	1734-8BE	1734-TOP3	9 INPUT STANDARD	AB
8	1734-OB8E	1734-TOP3 X2	8 OUTPUT SAFETY	AB
K2	SIM312	SRD SIM4	ELESTA SRD-SIM312 RELAY	ELESTA
K4	SIM312	SRD SIM4	ELESTA SRD-SIM312 RELAY	ELESTA
K6	SIM312	SRD SIM4	ELESTA SRD-SIM312 RELAY	ELESTA
K8	SIM312	SRD SIM4	ELESTA SRD-SIM312 RELAY	ELESTA

LT-EL-BL-EI-PPS-1070-90

REV	DESCRIPTION	DATE	BY	CHECKED	APP
	SEE SHEET 1				

Paired part numbers are color coordinated.

COLOR	PROD #	TYPE
[1]	3044636	Double-level terminal block - UTTB 2,5
[2]	3044092	GROUND
[3]	3047293	End cover - D-UTTB 2,5/4
[4]	3047303	Spacer plate - DP-UTTB 2,5/4
[5]	1201413	End clamp - E/UK 1
[6]	EPDDFL4U	End Plate; Term Blk; DIN Rail; Gray;
[7]	3044542	DIN Rail Terminal Blocks UT 2 5/4-QUATTRO
[8]	DDFL-4U	24V FUSES
[9]	3044076	Feed-through terminal block - UT 2,5
[10]	3047028	End cover - D-UT 2,5/10
[11]	3047170	End cover - D-UT 2,5/4-QUATTRO
[12]	3044102	Feed-through terminal block - UT 4
[13]	2775016	Feed-through terminal block - UDK 4
[14]	KN-TL-14	KONNECT IT 3 CIRCUIT TERMINAL BLOCK
[15]	KN-EC-TL	3 CIRCUIT TERMINAL BLOCK COVER
[16]	CDL4U(E)DD2	99321 ALTECH DIODE TERMINAL BLOCK
[17]	EPCDL4U	ALTECH DIODE TB END COVER
[18]	3044636	Diode TB - UTTB 2,5 O-UL/UR-UL

[1]

[7]

[13]

[2]

[8]

[14]

[3]

[9]

[15]

[4]

[10]

[16]

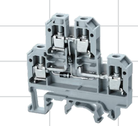

[5]

[11]

[17]

[6]

[12]

[18]

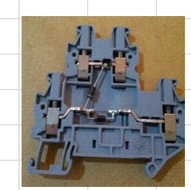

LT-EL-BL-EI-PPS-1070-90

LT-EL-BL-EI (DRAWING DIRECTORY)	LT-EL-BL-EI-PPS-1070-90 (DRAWING NUMBER)	A (REV)
COMPUTER REPRODUCIBLE	SCALE: N/A	SHEET 33 OF 34

REV	DESCRIPTION	DATE	BY	CHECKED	APP
	SEE SHEET 1				

7ID Auxiliary Box Cable List

CABLE Num.	CHAIN	From LOCATION	To LOCATION	CONDUCTORS
ID7AUX-1-A	A	Aux. Box	Photon Shutter A L1A2 Proximity Sensor, open and closed switches/Solenoid	8
ID7AUX-1-B	B	Aux. Box	Photon Shutter B L1B2 Proximity Sensor, open and closed switches/Solenoid	8
ID7AUX-2-A	A	Aux. Box	Photon Shutter A L1A3 Proximity Sensor, open and closed switches/Solenoid	8
ID7AUX-2-B	B	Aux. Box	Photon Shutter B L1B3 Proximity Sensor, open and closed switches/Solenoid	8
ID7AUX-3-A	A	Aux. Box	Photon Shutter A L1A5 Proximity Sensor, open and closed switches/Solenoid	8
ID7AUX-3-B	B	Aux. Box	Photon Shutter B L1B5 Proximity Sensor, open and closed switches/Solenoid	8
ID7AUX-4-A	A	Aux. Box	Photon Shutter A L1A6 Proximity Sensor, open and closed switches/Solenoid	8
ID7AUX-4-B	B	Aux. Box	Photon Shutter B L1B6 Proximity Sensor, open and closed switches/Solenoid	8
ID7AUX-5-A	A	Aux. Box	Photon Shutter A L1A7 Proximity Sensor, open and closed switches/Solenoid	8
ID7AUX-5-B	B	Aux. Box	Photon Shutter B L1B7 Proximity Sensor, open and closed switches/Solenoid	8
ID7AUX-6-A	A	Aux. Box	Photon Shutter A L1A8 Proximity Sensor, open and closed switches/Solenoid	8
ID7AUX-6-B	B	Aux. Box	Photon Shutter B L1B8 Proximity Sensor, open and closed switches/Solenoid	8
ID7AUX-7-A	A	Aux. Box	Photon Shutter A L1A9 Proximity Sensor, open and closed switches/Solenoid	8
ID7AUX-7-B	B	Aux. Box	Photon Shutter B L1B9 Proximity Sensor, open and closed switches/Solenoid	8
ID7AUX-8-A	A	Aux. Box	Photon Shutter A L1A10 Proximity Sensor, open and closed switches/Solenoid	8
ID7AUX-8-B	B	Aux. Box	Photon Shutter B L1B10 Proximity Sensor, open and closed switches/Solenoid	8
ID7AUX-9-A	A	Aux. Box	A Chain Beam Line1 Vacuum Switch 1	2
ID7AUX-9-B	B	Aux. Box	B Chain Beam Line1 Vacuum Switch 1	2
ID7AUX-10-A	A	Aux. Box	A Chain Beam Line1 Vacuum Switch 2	2
ID7AUX-10-B	B	Aux. Box	B Chain Beam Line1 Vacuum Switch 2	2
ID7AUX-11-A	A	Aux. Box	A Chain Beam Line1 Vacuum Switch 3	2
ID7AUX-11-B	B	Aux. Box	B Chain Beam Line1 Vacuum Switch 3	2
ID7AUX-12-A	A	Aux. Box	A Chain Beam Line1 Vacuum Switch 8	2
ID7AUX-12-B	B	Aux. Box	B Chain Beam Line1 Vacuum Switch 8	2
ID7AUX-13-A	A	Aux. Box	A Chain Beam Line1 Vacuum Switch 12	2
ID7AUX-13-B	B	Aux. Box	B Chain Beam Line1 Vacuum Switch 12	2
ID7AUX-14-A	A	Aux. Box	A Chain Beam Line2 Vacuum Switch 4	2
ID7AUX-14-B	B	Aux. Box	B Chain Beam Line2 Vacuum Switch 4	2
ID7AUX-15-A	A	Aux. Box	A Chain Beam Line TR. Vacuum Switch 5	2
ID7AUX-15-B	B	Aux. Box	B Chain Beam Line TR. Vacuum Switch 5	2
ID7AUX-16-A	A	Aux. Box	A Chain Beam Line TR. Vacuum Switch 6	2
ID7AUX-16-B	B	Aux. Box	B Chain Beam Line TR. Vacuum Switch 6	2
ID7AUX-17-A	A	Aux. Box	A Chain Beam Line2 Vacuum Switch 7	2
ID7AUX-17-B	B	Aux. Box	B Chain Beam Line2 Vacuum Switch 7	2
ID7AUX-18-A	A	Aux. Box	A Chain Beam Line2 Vacuum Switch 9	2
ID7AUX-18-B	B	Aux. Box	B Chain Beam Line2 Vacuum Switch 9	2
ID7AUX-19-A	A	Aux. Box	A Chain Beam Line2 Vacuum Switch 10	2
ID7AUX-19-B	B	Aux. Box	B Chain Beam Line2 Vacuum Switch 10	2
ID7AUX-20-A	A	Aux. Box	A Chain Beam Line2 Vacuum Switch 11	2
ID7AUX-20-B	B	Aux. Box	B Chain Beam Line2 Vacuum Switch 11	2
ID7FL-1-A	A	Aux. Box	Differential Pressure Sensor 2A	2
ID7FL-1-B	B	Aux. Box	Differential Pressure Sensor 2B	2
ID7FL-2-A	A	Aux. Box	Differential Pressure Sensor 1A	2
ID7FL-2-B	B	Aux. Box	Differential Pressure Sensor 1B	2
ID7AUX-1-EPS	EPS	Aux. Box	Photon Shutter L1A2 Closed&Open Position Switch_EPS	4
ID7AUX-2-EPS	EPS	Aux. Box	Photon Shutter L1B2 Closed&Open Position Switch_EPS	4
ID7AUX-3-EPS	EPS	Aux. Box	Photon Shutter L1A3 Closed&Open Position Switch_EPS	4
ID7AUX-4-EPS	EPS	Aux. Box	Photon Shutter L1B3 Closed&Open Position Switch_EPS	4
ID7AUX-5-EPS	EPS	Aux. Box	Photon Shutter LTRA5 Closed&Open Position Switch_EPS	4
ID7AUX-6-EPS	EPS	Aux. Box	Photon Shutter LTRB5 Closed&Open Position Switch_EPS	4
ID7AUX-7-EPS	EPS	Aux. Box	Photon Shutter LTRA6 Closed&Open Position Switch_EPS	4
ID7AUX-8-EPS	EPS	Aux. Box	Photon Shutter LTRB6 Closed&Open Position Switch_EPS	4
ID7AUX-9-EPS	EPS	Aux. Box	Photon Shutter L2A7 Closed&Open Position Switch_EPS	4
ID7AUX-10-EPS	EPS	Aux. Box	Photon Shutter L2B7 Closed&Open Position Switch_EPS	4
ID7AUX-11-EPS	EPS	Aux. Box	Photon Shutter L2A8 Closed&Open Position Switch_EPS	4
ID7AUX-12-EPS	EPS	Aux. Box	Photon Shutter L2B8 Closed&Open Position Switch_EPS	4
ID7AUX-13-EPS	EPS	Aux. Box	Photon Shutter L2A9 Closed&Open Position Switch_EPS	4
ID7AUX-14-EPS	EPS	Aux. Box	Photon Shutter L2B9 Closed&Open Position Switch_EPS	4
ID7AUX-15-EPS	EPS	Aux. Box	Photon Shutter L2A10 Closed&Open Position Switch_EPS	4
ID7AUX-16-EPS	EPS	Aux. Box	Photon Shutter L2B10 Closed&Open Position Switch_EPS	4

REV	DESCRIPTION	DATE	BY	CHECKED	APP
A	INITIAL RELEASE	1/24/2018	SEJ	JM	SB

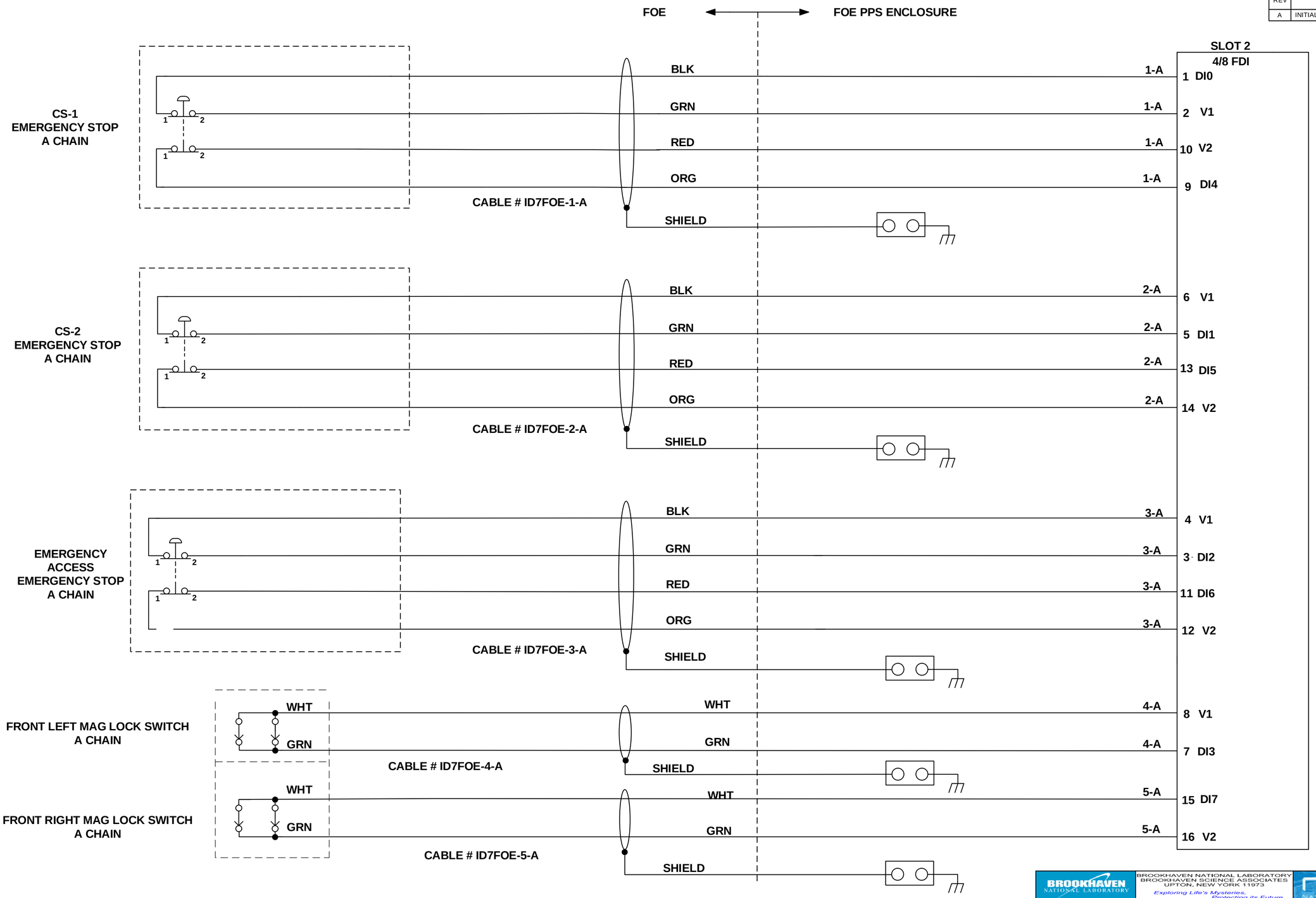

A

LT-EL-BL-EI-PPS-1070-91

BROOKHAVEN NATIONAL LABORATORY

BROOKHAVEN NATIONAL LABORATORY
BROOKHAVEN SCIENCE ASSOCIATES
UPTON, NEW YORK 11973
Exploring Life's Mysteries, Protecting its Future

NSLS II NATIONAL SYNCHROTRON LIGHT SOURCE II

UNLESS OTHERWISE SPECIFIED
INTEGER TOLERANCES ± .06
DECIMAL TOLERANCES
.X ± .030
.XX ± .015
.XXX ± .010
ANGULAR TOLERANCE ± 0.5°
UNSPECIFIED RADII .02 MAX
125 BREAK SHARP CORNERS AND EDGES
FINISH MAX .03 MIN .005

UNLESS OTHERWISE SPECIFIED DIMENSIONS ARE IN INCHES
DIMENSIONS IN [ ] ARE MILLIMETERS EQUIV. FOR REF. ONLY

ESH&Q RISK LEVEL A-1

INTERPRET DRAWING AS PER ANSI Y14.5 OR Y32.2

OUTSTANDING ECN'S

		DATE
DRWN BY	S. JARZABKOWSKI	1/24/2018
CHK BY	J. MALLEY	1/26/2018
ENG APP	S. BUDA	1/24/2018
SUPV APP	G. GANETIS	1/26/2018
QA APP	E. CHESWICK	1/25/2018
ESH APP	B. LEE	1/25/2018

WIRING DIAGRAM, 7-ID-FOE (SST-FOE) A CHAIN AND B CHAIN

LT-EL-BL-EI — DRAWING DIRECTORY
LT-EL-BL-EI-PPS-1070-91 — DRAWING NUMBER
A — REV

COMPUTER REPRODUCIBLE

SCALE: N/A

SHEET 1 OF 41

JOB NUMBER | USED ON DWG. NO.

REV	DESCRIPTION	DATE	BY	CHECKED	APP
	SEE SHEET 1				

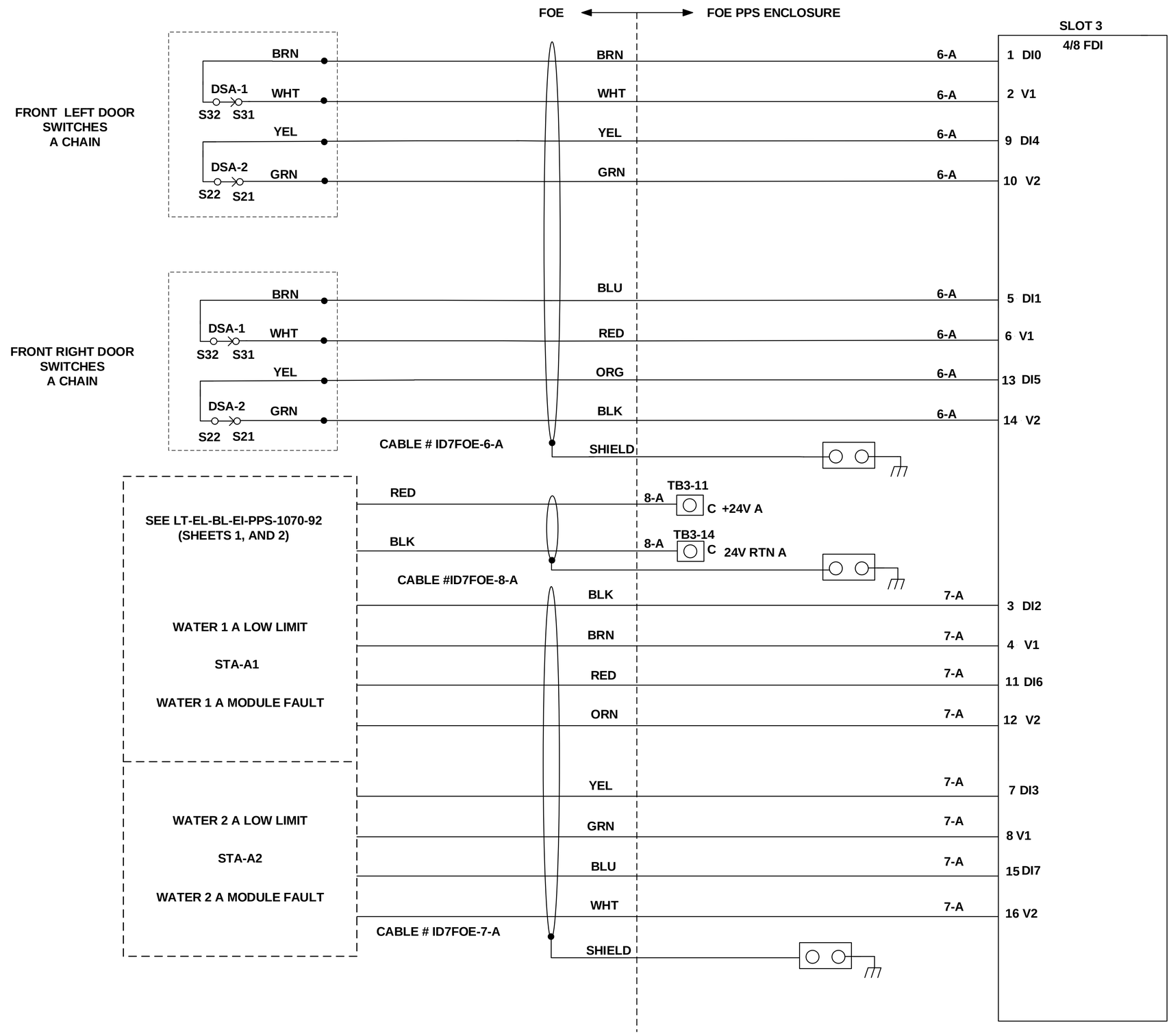

A

LT-EL-BL-EI	LT-EL-BL-EI-PPS-1070-91	A
DRAWING DIRECTORY	DRAWING NUMBER	REV
COMPUTER REPRODUCIBLE	SCALE: N/A	SHEET 2 OF 41

LT-EL-BL-EI-PPS-1070-91

REV	DESCRIPTION	DATE	BY	CHECKED	APP
	SEE SHEET 1				

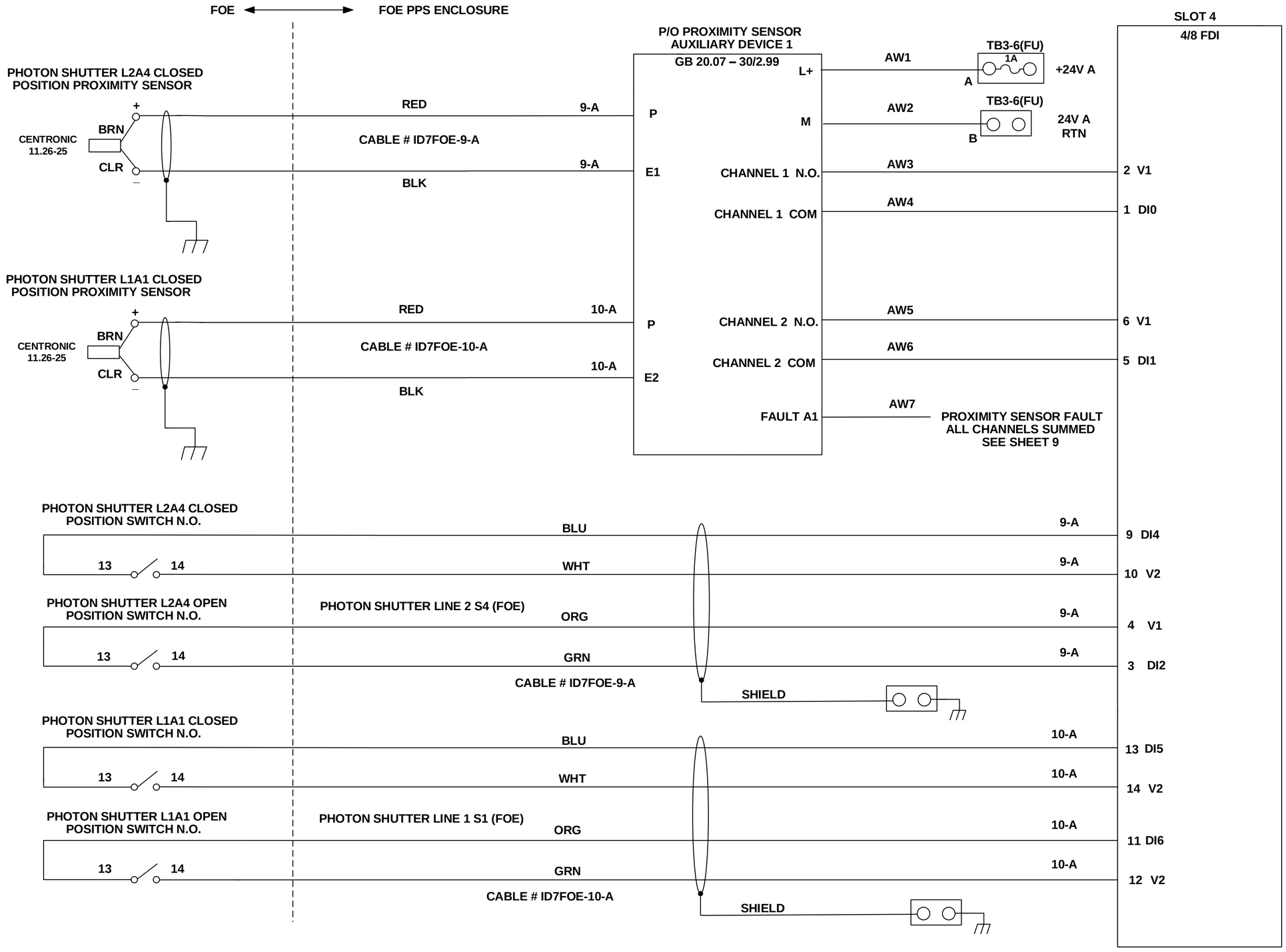

A

LT-EL-BL-EI	LT-EL-BL-EI-PPS-1070-91	A
DRAWING DIRECTORY	DRAWING NUMBER	REV

COMPUTER REPRODUCIBLE | SCALE: N/A | SHEET 3 OF 41

LT-EL-BL-EI-PPS-1070-91

REV	DESCRIPTION	DATE	BY	CHECKED	APP
	SEE SHEET 1				

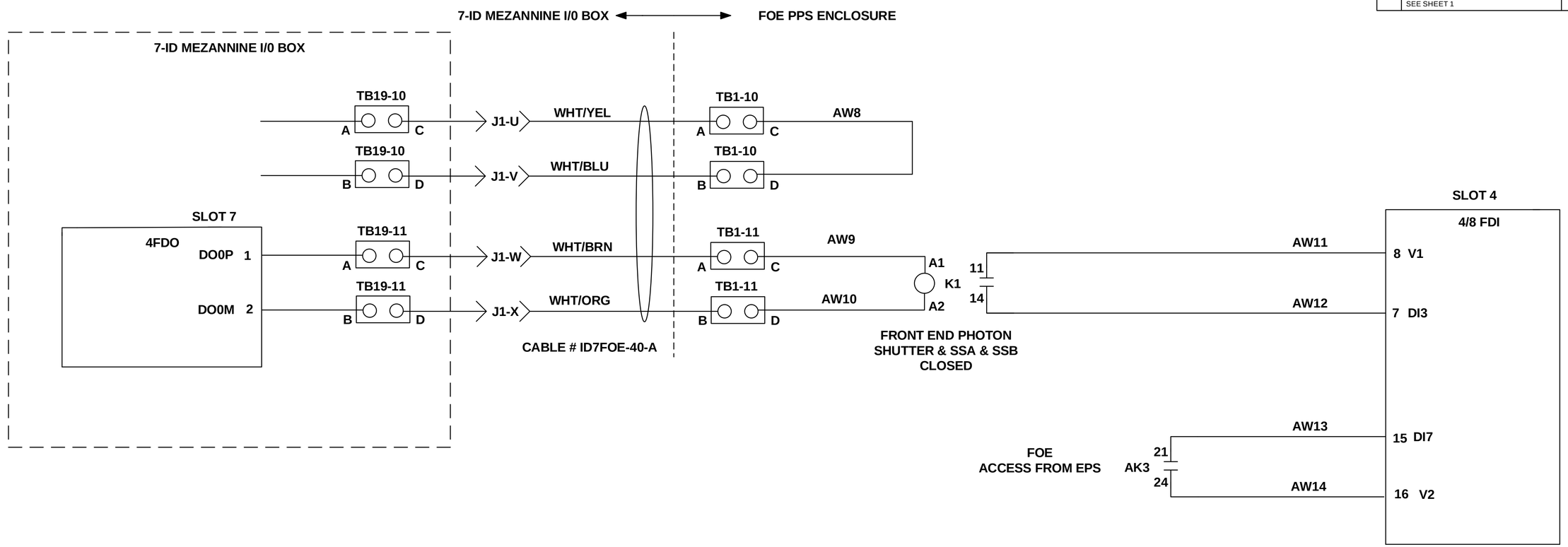

A

LT-EL-BL-EI	LT-EL-BL-EI-PPS-1070-91	A
DRAWING DIRECTORY	DRAWING NUMBER	REV

COMPUTER REPRODUCIBLE | SCALE: N/A | SHEET 4 OF 41

LT-EL-BL-EI-PPS-1070-91

REV	DESCRIPTION	DATE	BY	CHECKED	APP
	SEE SHEET 1				

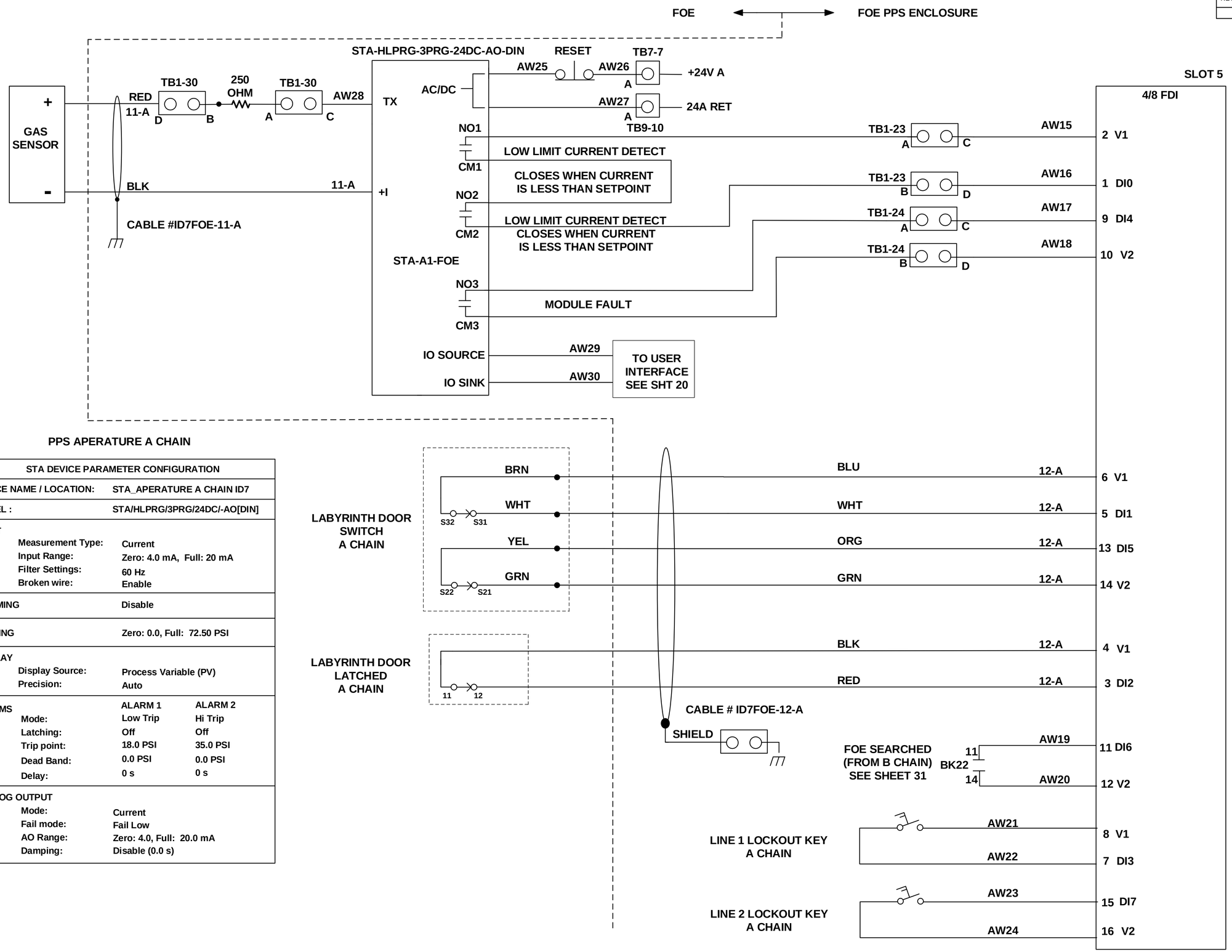

PPS APERATURE A CHAIN

STA DEVICE PARAMETER CONFIGURATION		
DEVICE NAME / LOCATION:	STA_APERATURE A CHAIN ID7	
MODEL :	STA/HLPRG/3PRG/24DC/-AO[DIN]	
INPUT		
Measurement Type:	Current	
Input Range:	Zero: 4.0 mA, Full: 20 mA	
Filter Settings:	60 Hz	
Broken wire:	Enable	
TRIMMING	Disable	
SCALING	Zero: 0.0, Full: 72.50 PSI	
DISPLAY		
Display Source:	Process Variable (PV)	
Precision:	Auto	
ALARMS	ALARM 1	ALARM 2
Mode:	Low Trip	Hi Trip
Latching:	Off	Off
Trip point:	18.0 PSI	35.0 PSI
Dead Band:	0.0 PSI	0.0 PSI
Delay:	0 s	0 s
ANALOG OUTPUT		
Mode:	Current	
Fail mode:	Fail Low	
AO Range:	Zero: 4.0, Full: 20.0 mA	
Damping:	Disable (0.0 s)	

A

LT-EL-BL-EI (DRAWING DIRECTORY)	LT-EL-BL-EI-PPS-1120-91 (DRAWING NUMBER)	A (REV)
COMPUTER REPRODUCABLE	SCALE: N/A	SHEET 5 OF 40

LT-EL-BL-EI-PPS-1120-91

REV	DESCRIPTION	DATE	BY	CHECKED	APP
	SEE SHEET 1				

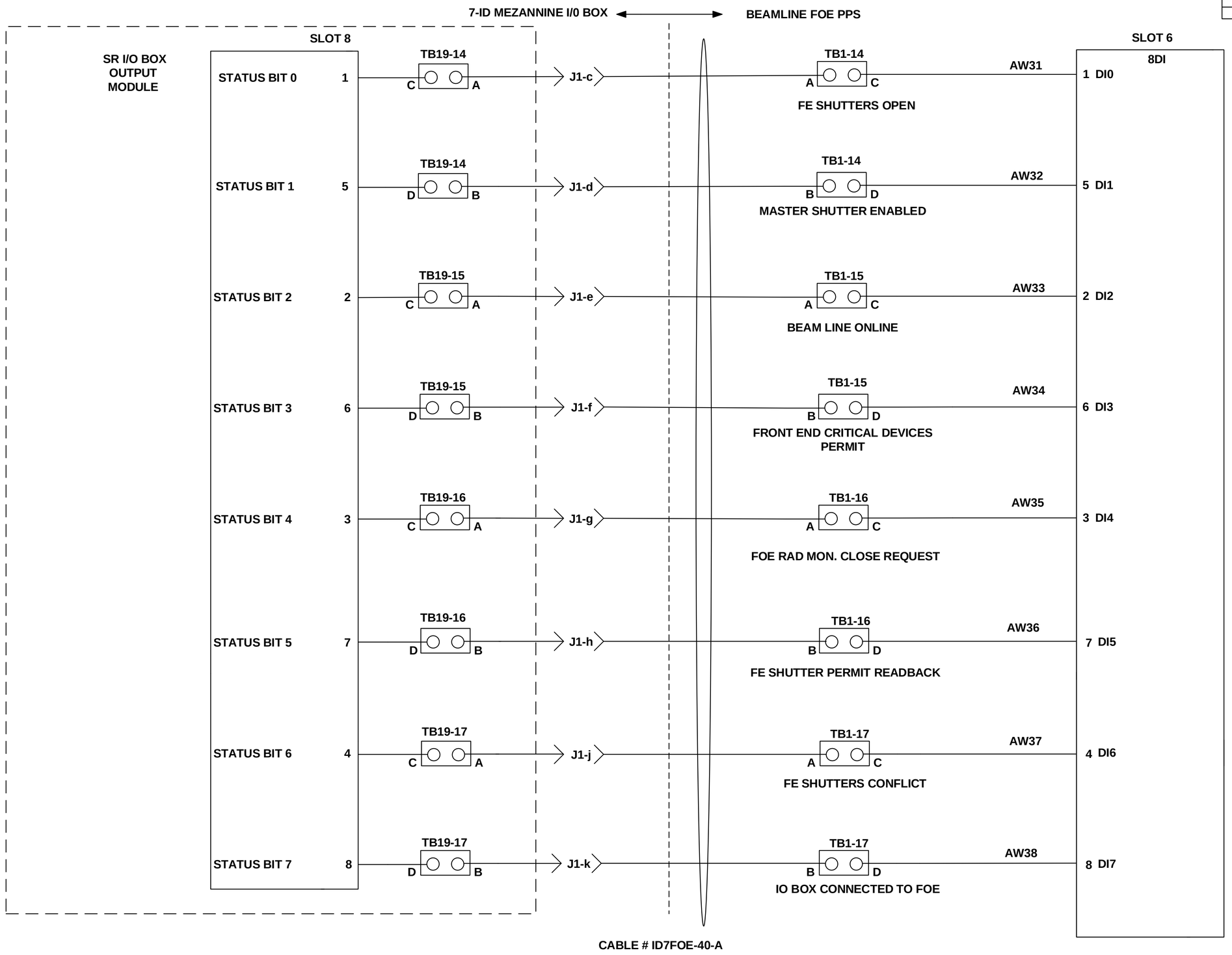

A

LT-EL-BL-EI (DRAWING DIRECTORY)	LT-EL-BL-EI-PPS-1070-91 (DRAWING NUMBER)	A (REV)
COMPUTER REPRODUCIBLE	SCALE: N/A	SHEET 6 OF 41

LT-EL-BL-EI-PPS-1070-91

REV	DESCRIPTION	DATE	BY	CHECKED	APP
	SEE SHEET 1				

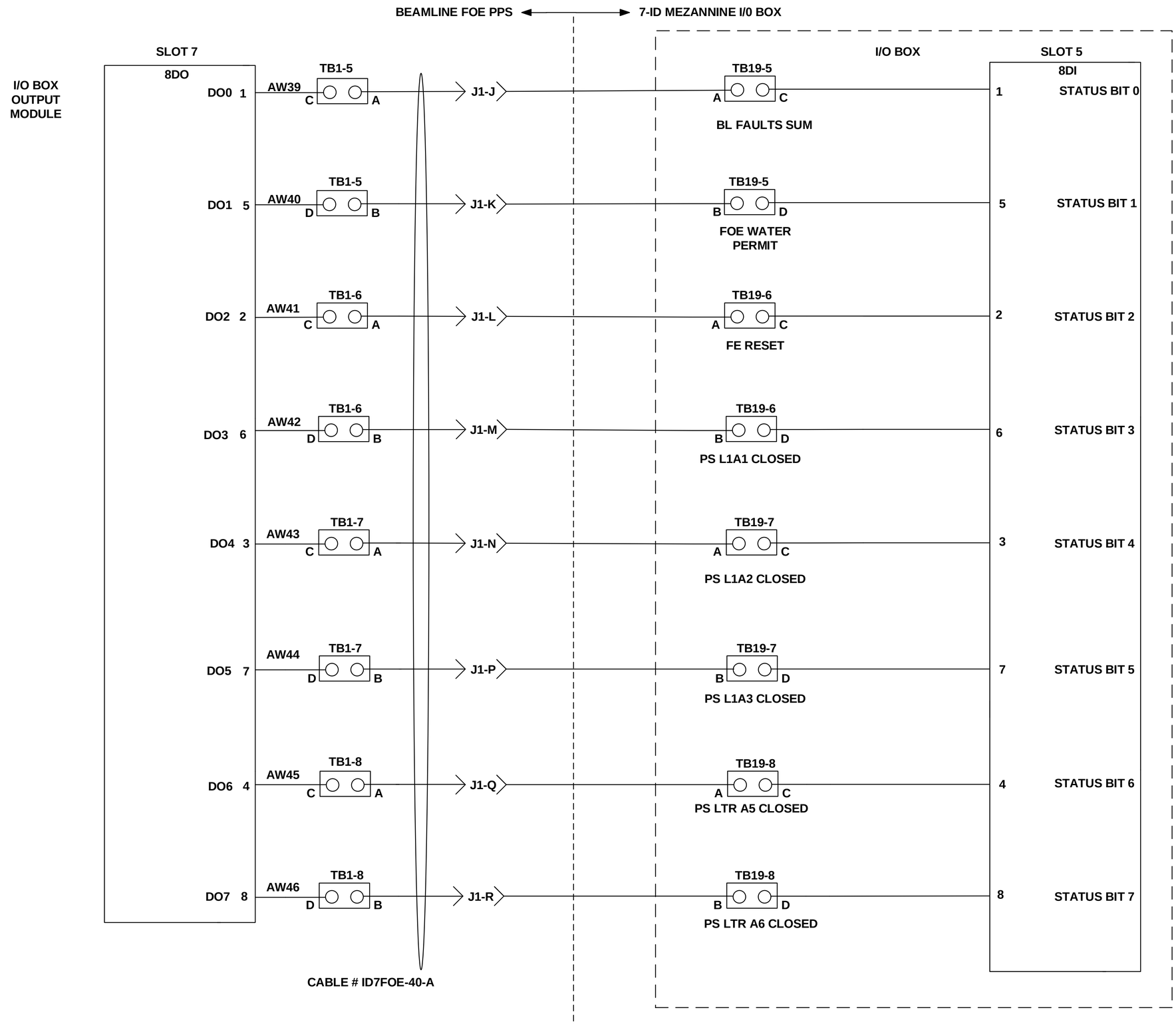

A

LT-EL-BL-EI DRAWING DIRECTORY	LT-EL-BL-EI-PPS-1070-91 DRAWING NUMBER	A REV
COMPUTER REPRODUCIBLE	SCALE: N/A	SHEET 7 OF 41

LT-EL-BL-EI-PPS-1070-91

REV	DESCRIPTION	DATE	BY	CHECKED	APP
	SEE SHEET 1				

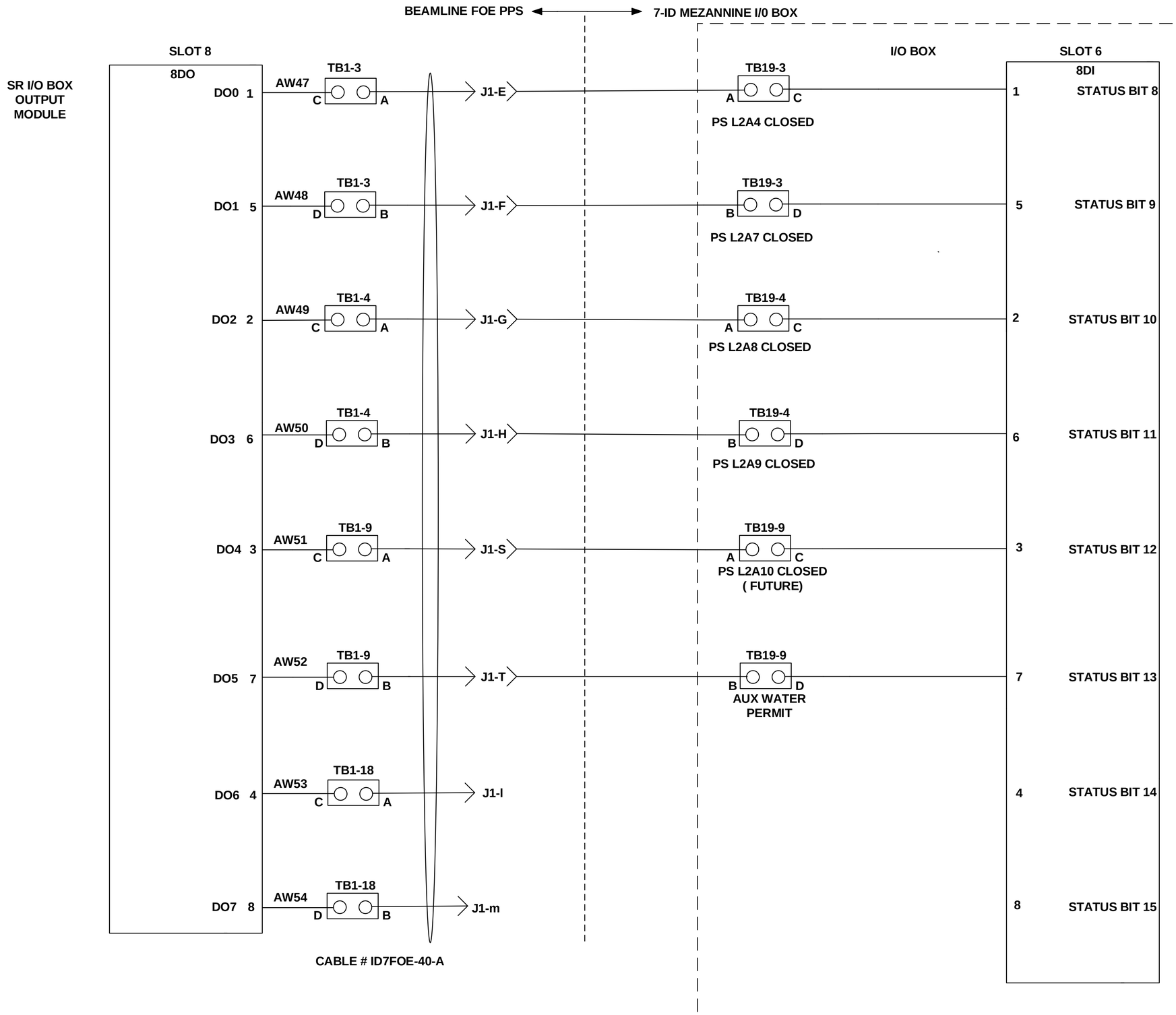

A

LT-EL-BL-EI	LT-EL-BL-EI-PPS-1070-91	A
DRAWING DIRECTORY	DRAWING NUMBER	REV
COMPUTER REPRODUCIBLE	SCALE: N/A	SHEET 8 OF 41

LT-EL-BL-EI-PPS-1070-91

REV	DESCRIPTION	DATE	BY	CHECKED	APP
	SEE SHEET 1				

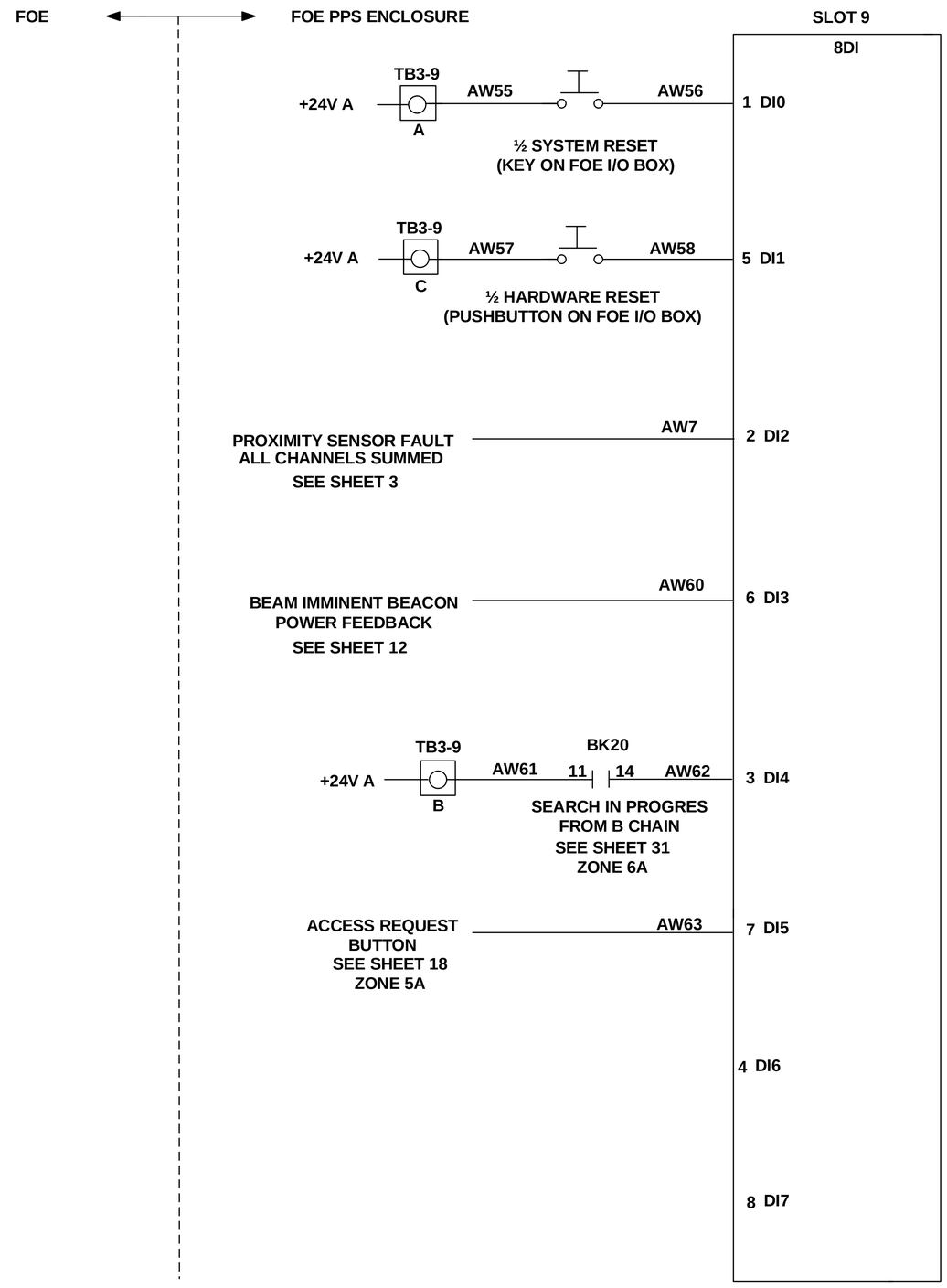

A

LT-EL-BL-EI	LT-EL-BL-EI-PPS-1070-91	A
DRAWING DIRECTORY	DRAWING NUMBER	REV

COMPUTER REPRODUCIBLE | SCALE: N/A | SHEET 9 OF 41

LT-EL-BL-EI-PPS-1070-91

REV	DESCRIPTION	DATE	BY	CHECKED	APP
	SEE SHEET 1				

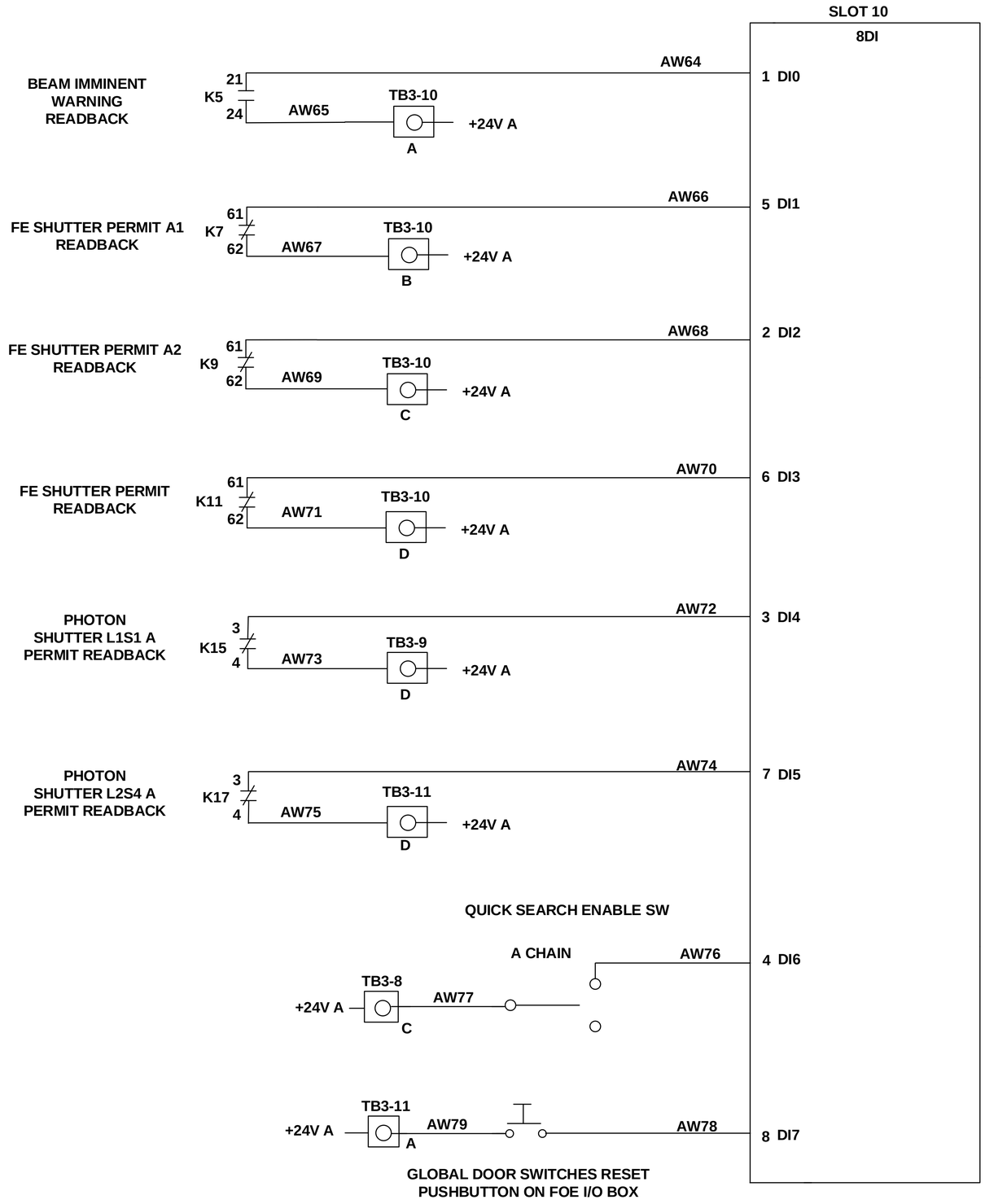

A

LT-EL-BL-EI	LT-EL-BL-EI-PPS-1070-91	A
DRAWING DIRECTORY	DRAWING NUMBER	REV

COMPUTER REPRODUCIBLE | SCALE: N/A | SHEET 10 OF 41

LT-EL-BL-EI-PPS-1070-91

REV	DESCRIPTION	DATE	BY	CHECKED	APP
	SEE SHEET 1				

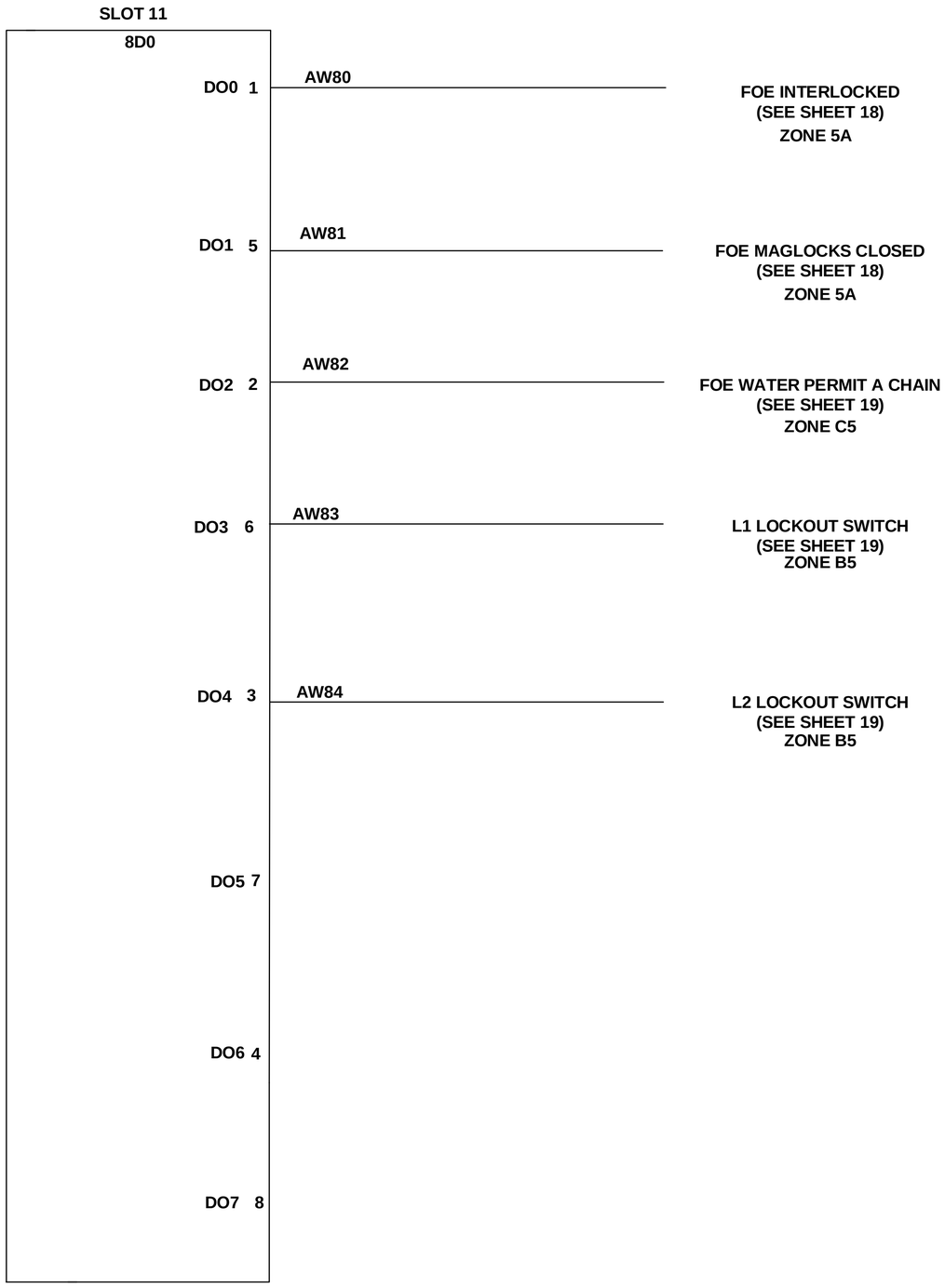

A

LT-EL-BL-EI	LT-EL-BL-EI-PPS-1070-91	A
DRAWING DIRECTORY	DRAWING NUMBER	REV

COMPUTER REPRODUCIBLE | SCALE: N/A | SHEET 11 OF 41

LT-EL-BL-EI-PPS-1070-91

REV	DESCRIPTION	DATE	BY	CHECKED	APP
	SEE SHEET 1				

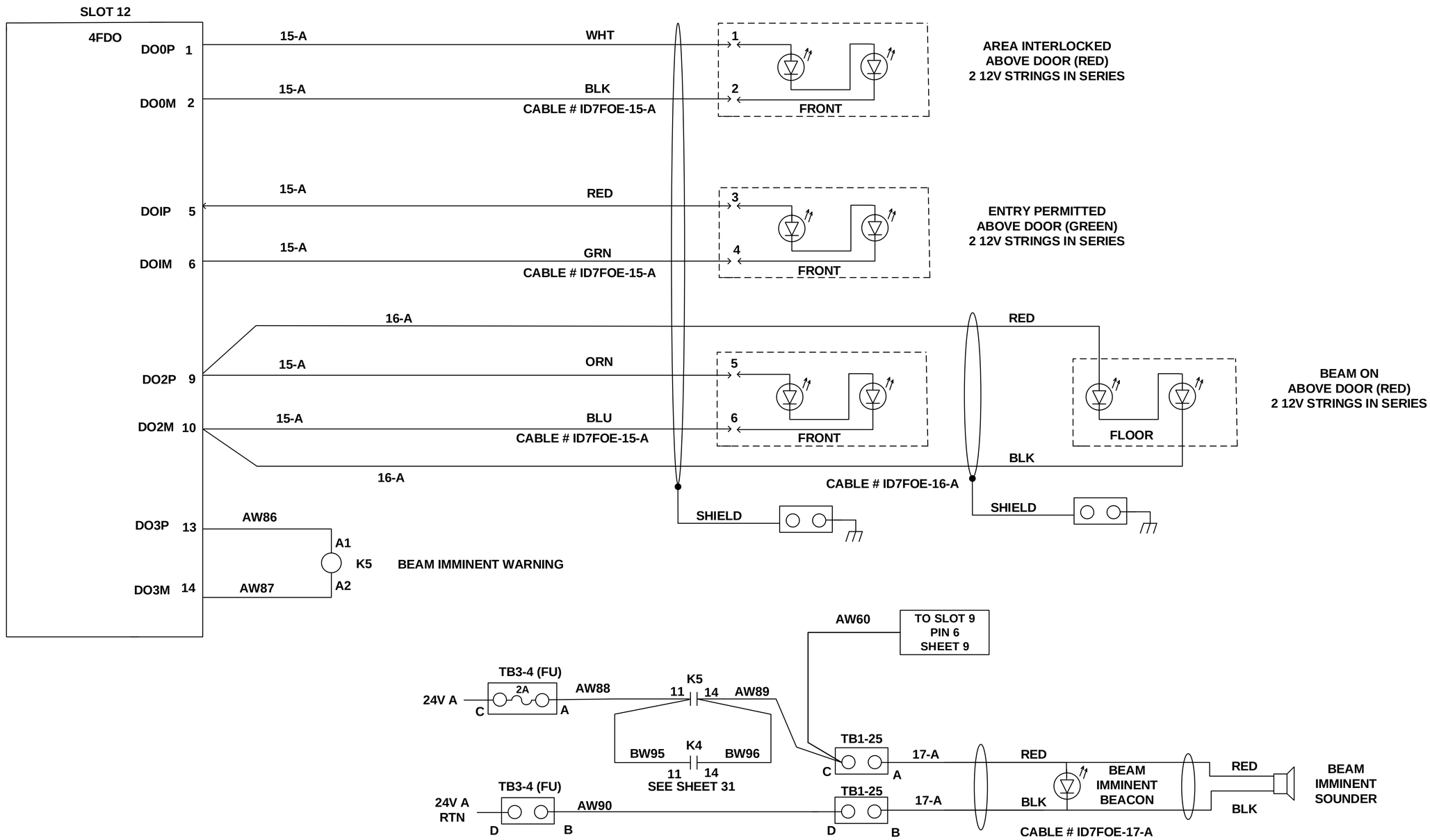

A

LT-EL-BL-EI	LT-EL-BL-EI-PPS-1070-91	A
DRAWING DIRECTORY	DRAWING NUMBER	REV

COMPUTER REPRODUCIBLE | SCALE: N/A | SHEET 12 OF 41

LT-EL-BL-EI-PPS-1070-91

REV	DESCRIPTION	DATE	BY	CHECKED	APP
	SEE SHEET 1				

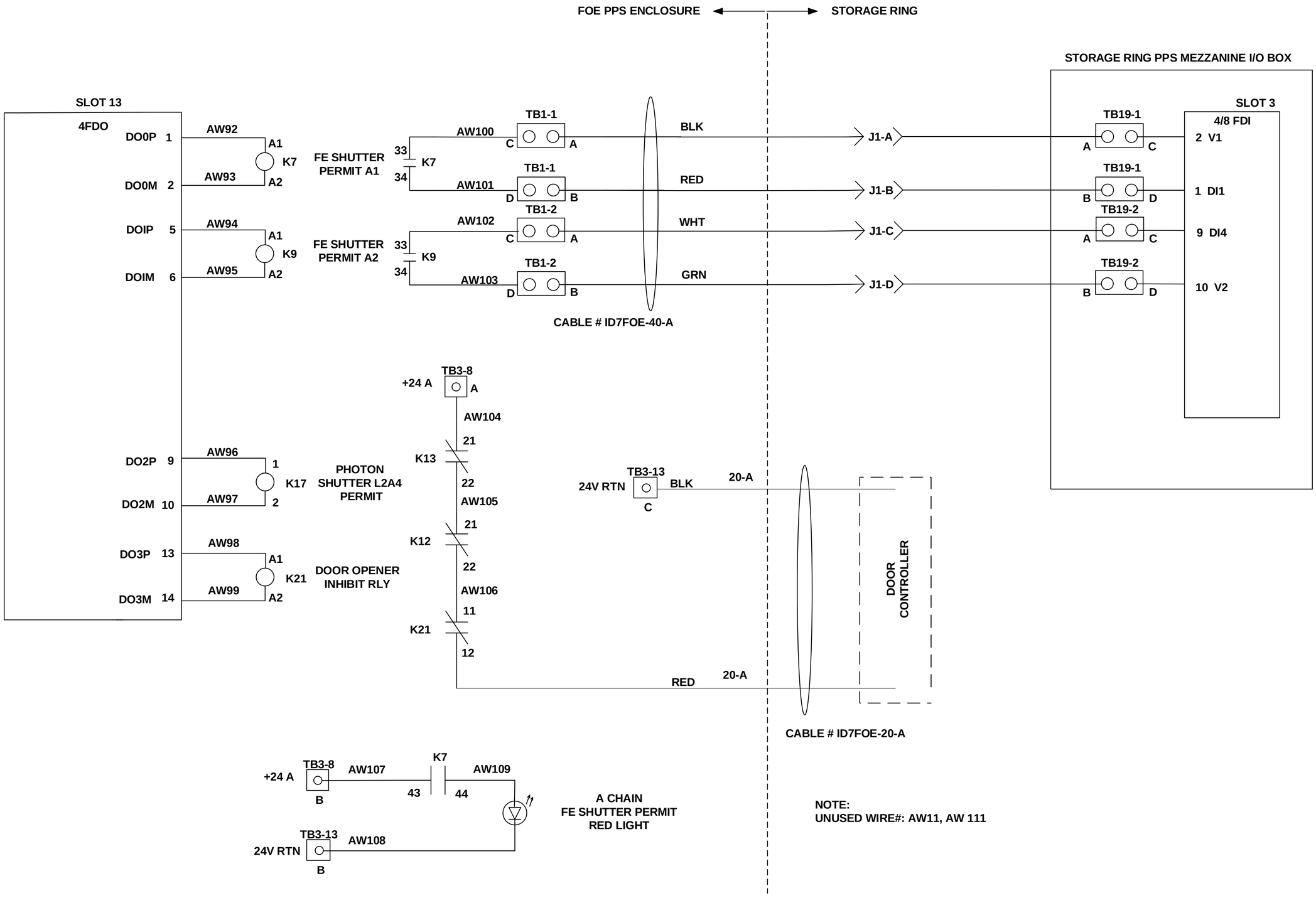

NOTE:
UNUSED WIRE#: AW11, AW 111

A

LT-EL-BL-EI (DRAWING DIRECTORY)	LT-EL-BL-EI-PPS-1070-91 (DRAWING NUMBER)	A (REV)
COMPUTER REPRODUCIBLE	SCALE: N/A	SHEET 13 OF 41

LT-EL-BL-EI-PPS-1070-91

REV	DESCRIPTION	DATE	BY	CHECKED	APP
	SEE SHEET 1				

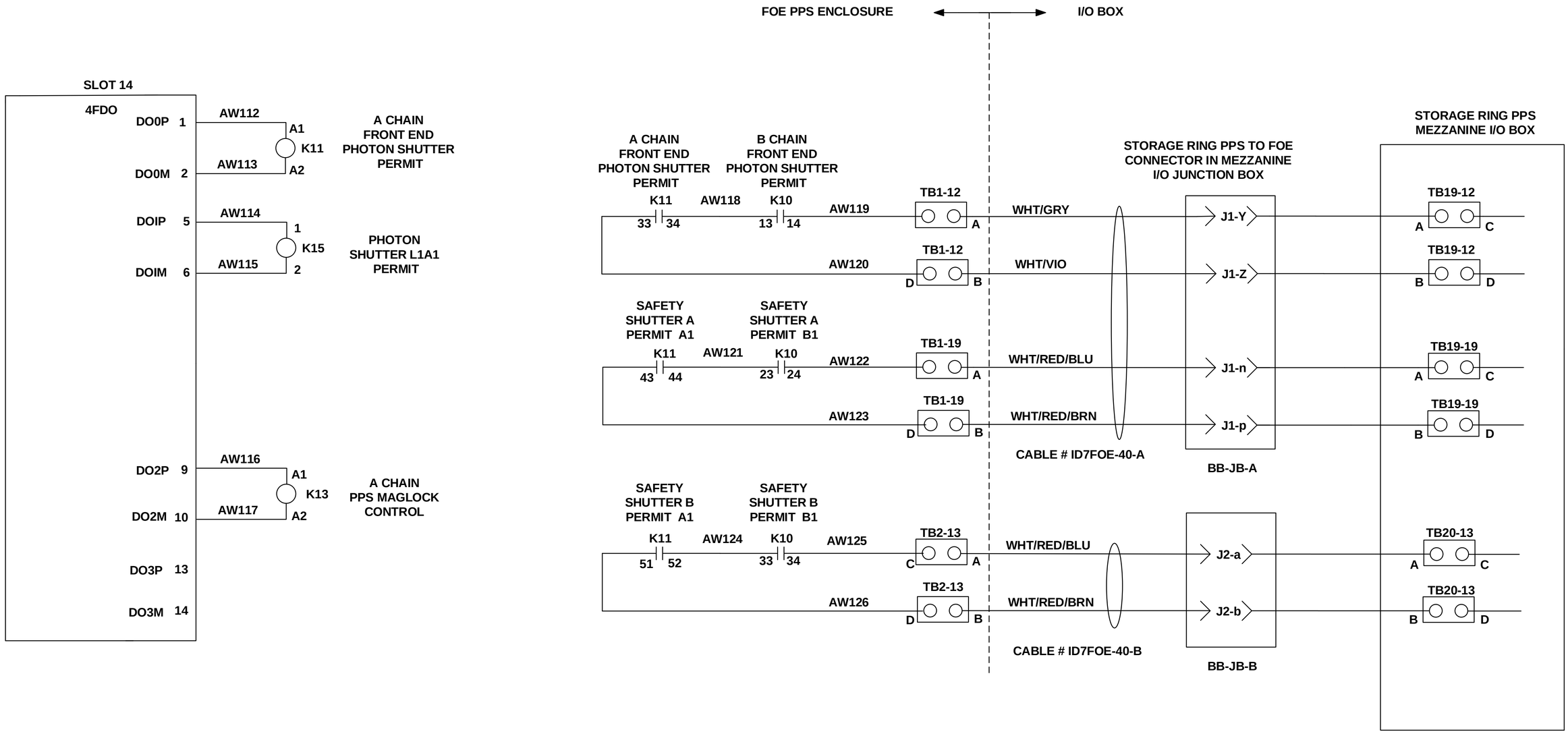

NOTE:
UNUSED WIRE#: AW129

A

LT-EL-BL-EI (DRAWING DIRECTORY)	LT-EL-BL-EI-PPS-1070-91 (DRAWING NUMBER)	A (REV)
COMPUTER REPRODUCIBLE	SCALE: N/A	SHEET 14 OF 41

LT-EL-BL-EI-PPS-1070-91

REV	DESCRIPTION	DATE	BY	CHECKED	APP
	SEE SHEET 1				

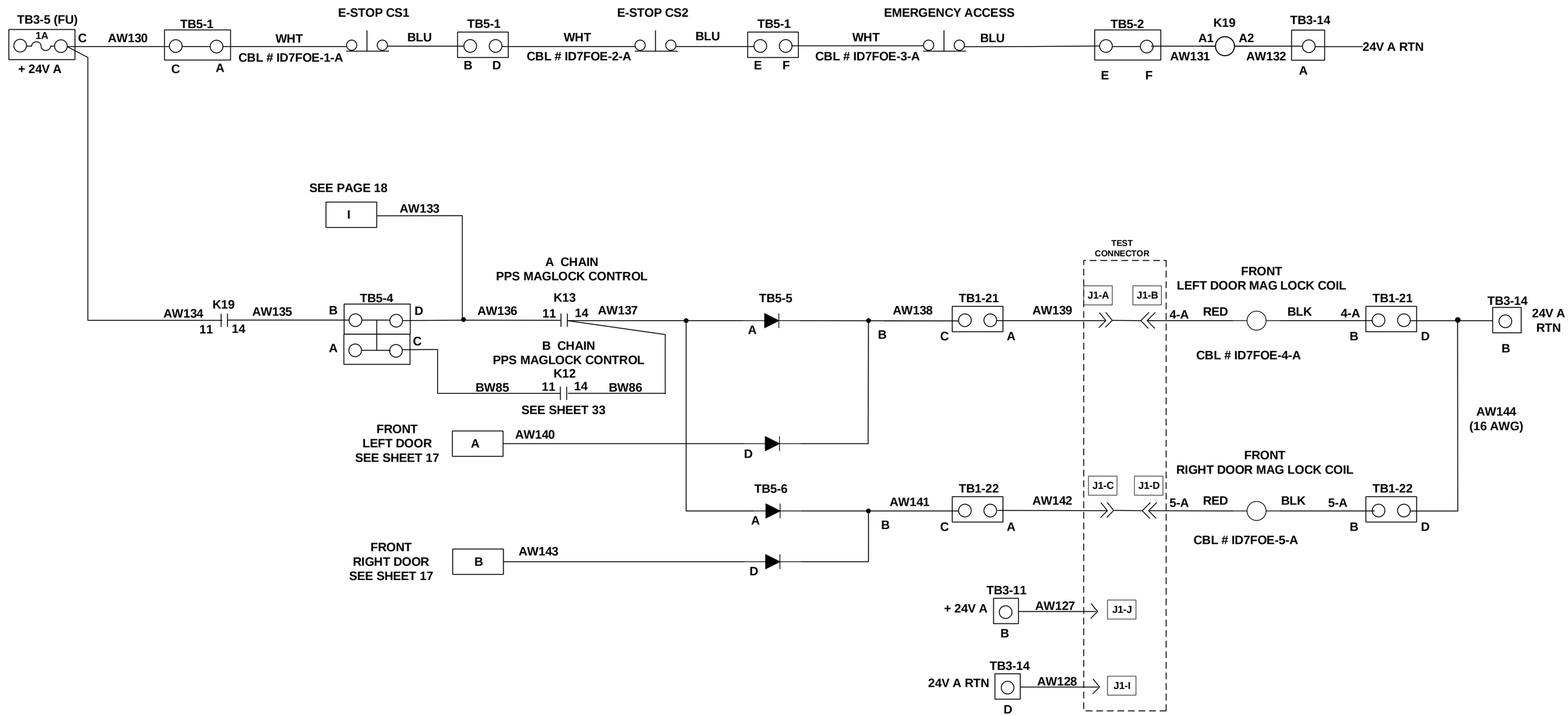

A

LT-EL-BL-EI	LT-EL-BL-EI-PPS-1070-91	A
DRAWING DIRECTORY	DRAWING NUMBER	REV

COMPUTER REPRODUCIBLE | SCALE: N/A | SHEET 15 OF 41

LT-EL-BL-EI-PPS-1070-91

REV	DESCRIPTION	DATE	BY	CHECKED	APP
	SEE SHEET 1				

NOTES:
J1 REFERS TO TEST CONNECTOR

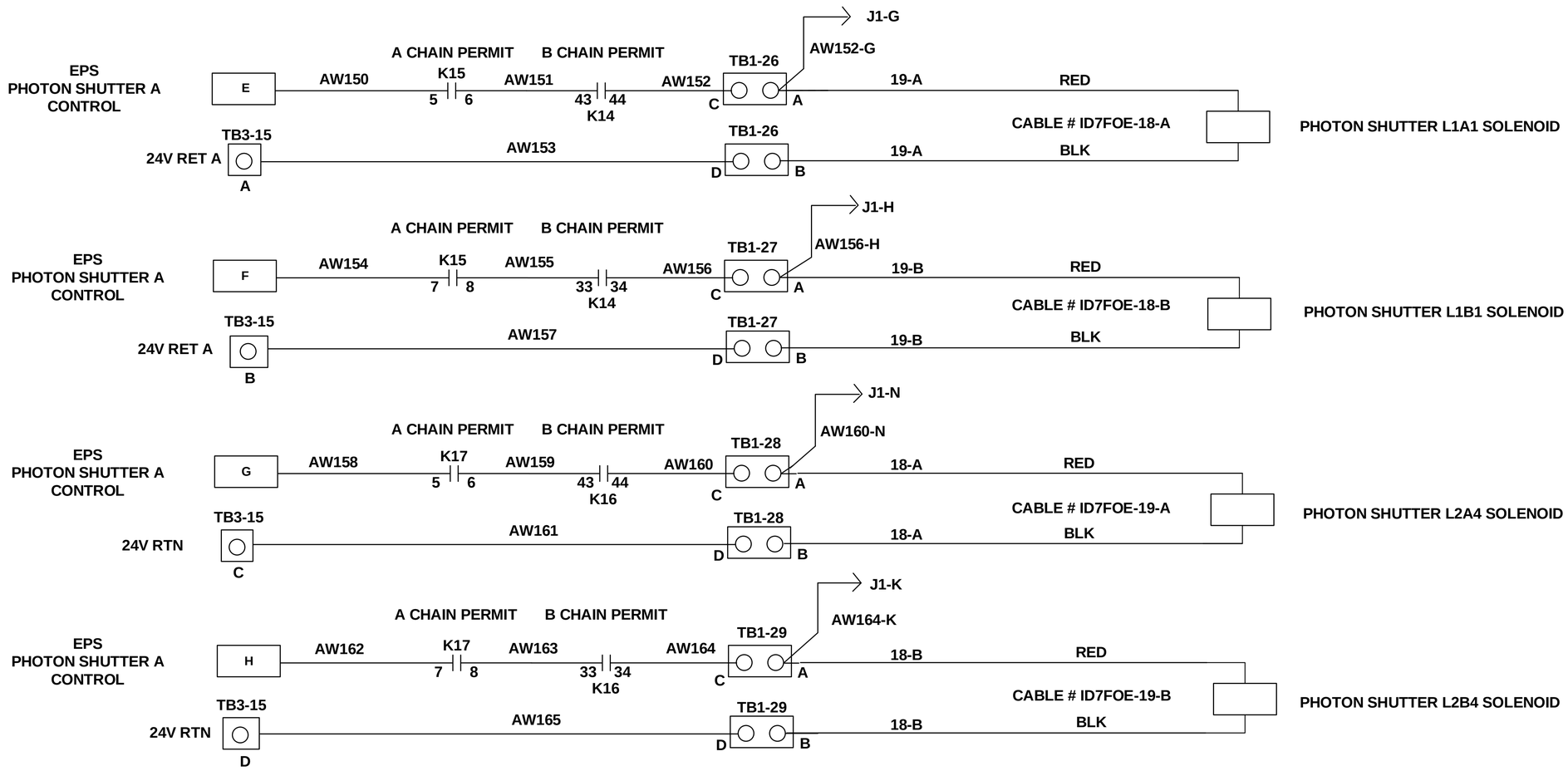

A

LT-EL-BL-EI	LT-EL-BL-EI-PPS-1070-91	A
DRAWING DIRECTORY	DRAWING NUMBER	REV
COMPUTER REPRODUCIBLE	SCALE: N/A	SHEET 16 OF 41

LT-EL-BL-EI-PPS-1070-91

REV	DESCRIPTION	DATE	BY	CHECKED	APP
	SEE SHEET 1				

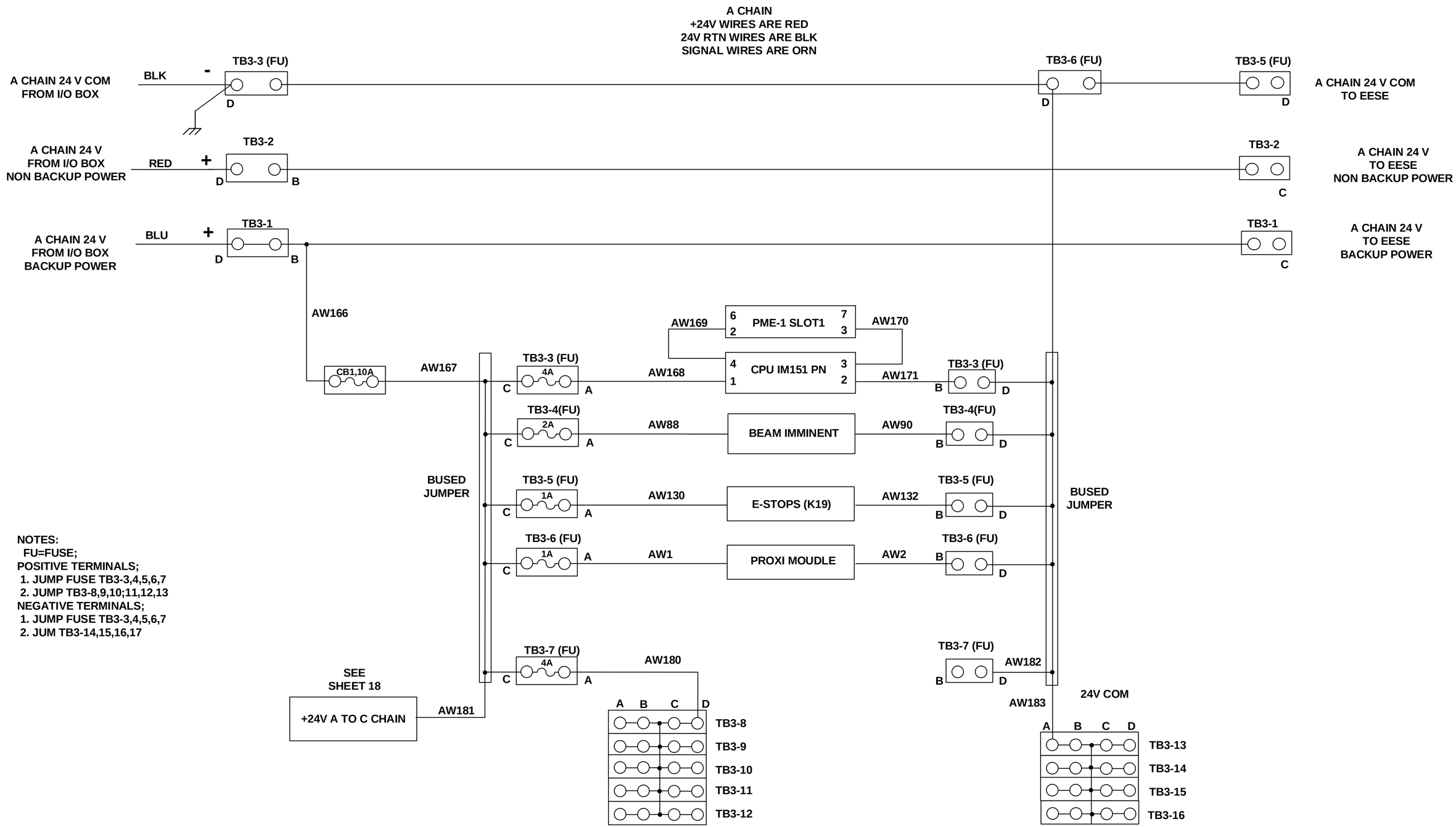

NOTES:
FU=FUSE;
POSITIVE TERMINALS;
1. JUMP FUSE TB3-3,4,5,6,7
2. JUMP TB3-8,9,10;11,12,13
NEGATIVE TERMINALS;
1. JUMP FUSE TB3-3,4,5,6,7
2. JUM TB3-14,15,16,17

A

LT-EL-BL-EI-PPS-1070-91

LT-EL-BL-EI (DRAWING DIRECTORY)	LT-EL-BL-EI-PPS-1070-91 (DRAWING NUMBER)	A (REV)
COMPUTER REPRODUCIBLE	SCALE: N/A	SHEET 17 OF 41

REV	DESCRIPTION	DATE	BY	CHECKED	APP
	SEE SHEET 1				

C CHAIN

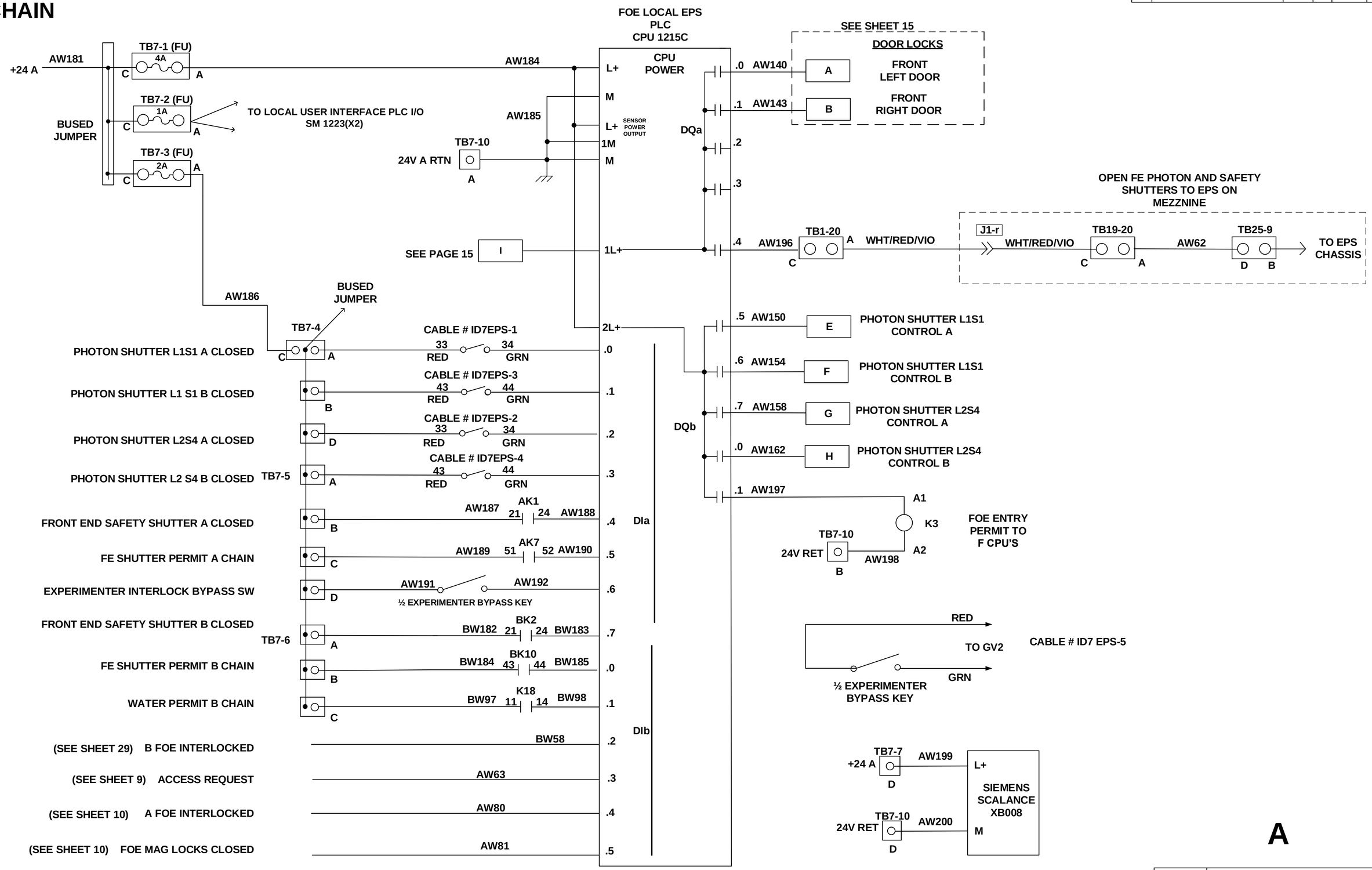

A

LT-EL-BL-EI	LT-EL-BL-EI-PPS-1070-91	A
DRAWING DIRECTORY	DRAWING NUMBER	REV
COMPUTER REPRODUCIBLE	SCALE: N/A	SHEET 18 OF 41

LT-EL-BL-EI-PPS-1070-91

REV	DESCRIPTION	DATE	BY	CHECKED	APP
	SEE SHEET 1				

C CHAIN

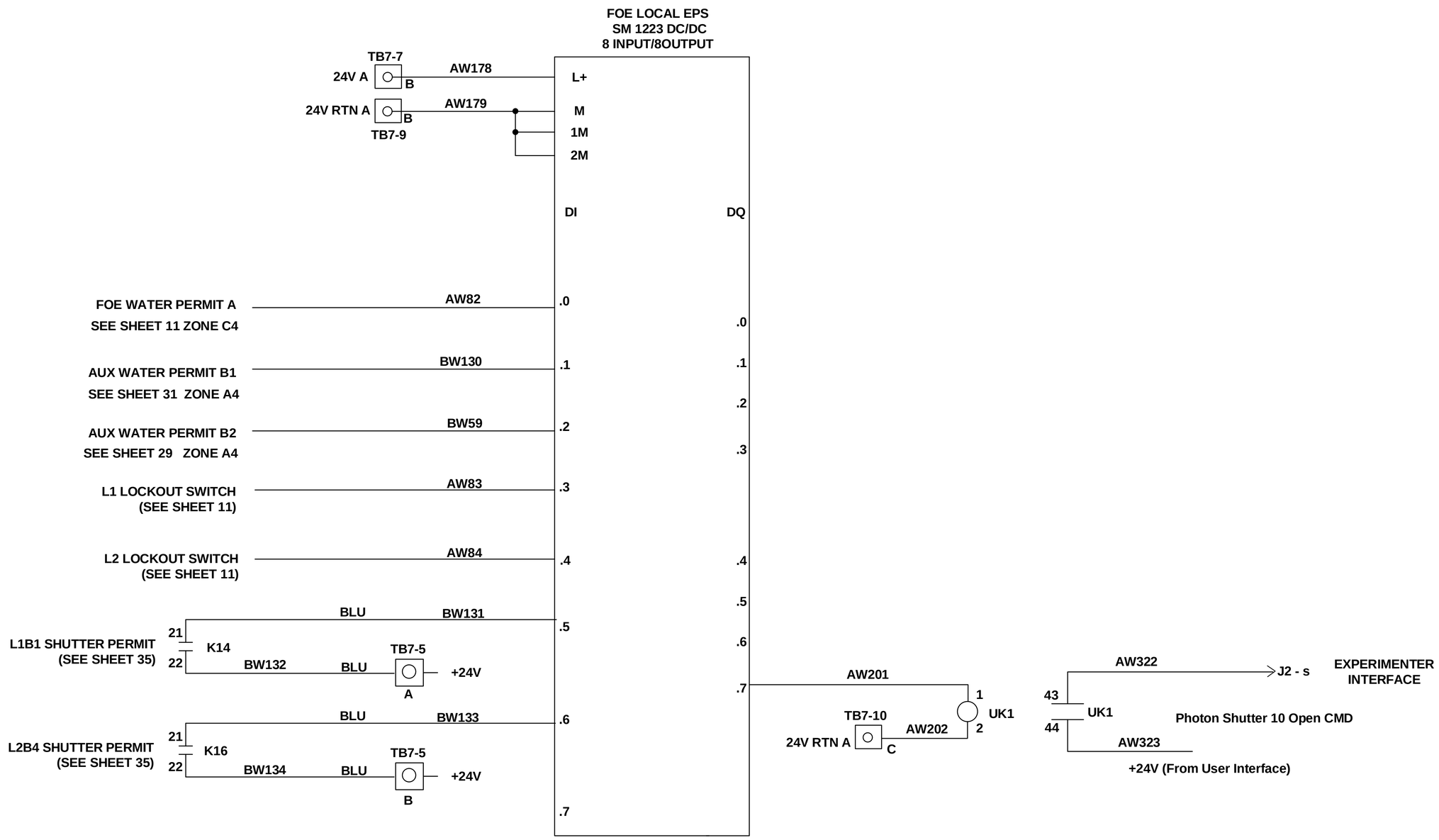

A

LT-EL-BL-EI	LT-EL-BL-EI-PPS-1070-91	A
DRAWING DIRECTORY	DRAWING NUMBER	REV
COMPUTER REPRODUCIBLE	SCALE: N/A	SHEET 19 OF 41

LT-EL-BL-EI-PPS-1070-91

REV	DESCRIPTION	DATE	BY	CHECKED	APP
	SEE SHEET 1				

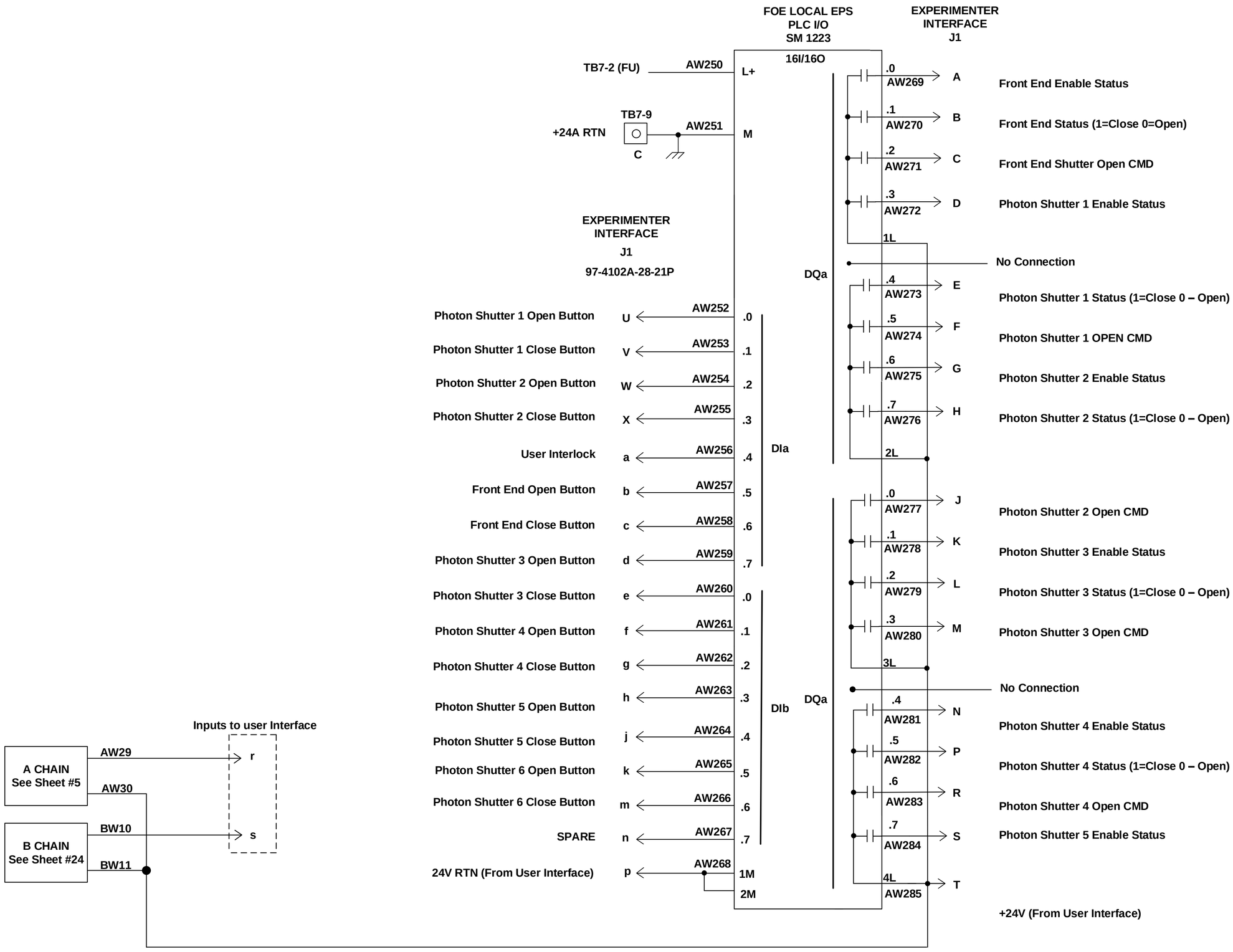

A

LT-EL-BL-EI	LT-EL-BL-EI-PPS-1070-91	A
DRAWING DIRECTORY	DRAWING NUMBER	REV

COMPUTER REPRODUCIBLE | SCALE: N/A | SHEET 20 OF 41

LT-EL-BL-EI-PPS-1070-91

REV	DESCRIPTION	DATE	BY	CHECKED	APP
	SEE SHEET 1				

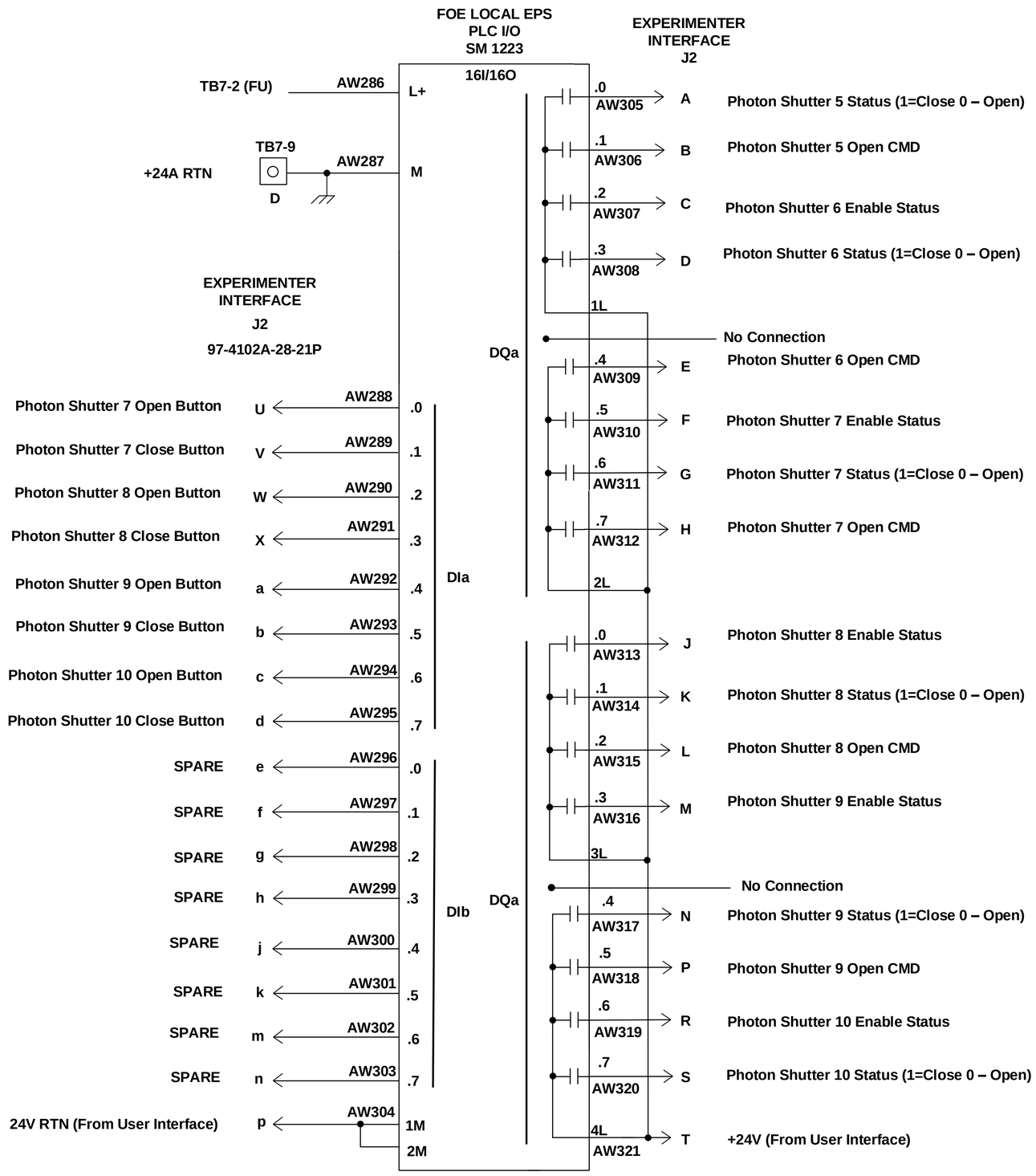

A

LT-EL-BL-EI	LT-EL-BL-EI-PPS-1070-91	A
DRAWING DIRECTORY	DRAWING NUMBER	REV
COMPUTER REPRODUCIBLE	SCALE: N/A	SHEET 21 OF 41

LT-EL-BL-EI-PPS-1070-91

REV	DESCRIPTION	DATE	BY	CHECKED	APP
	SEE SHEET 1				

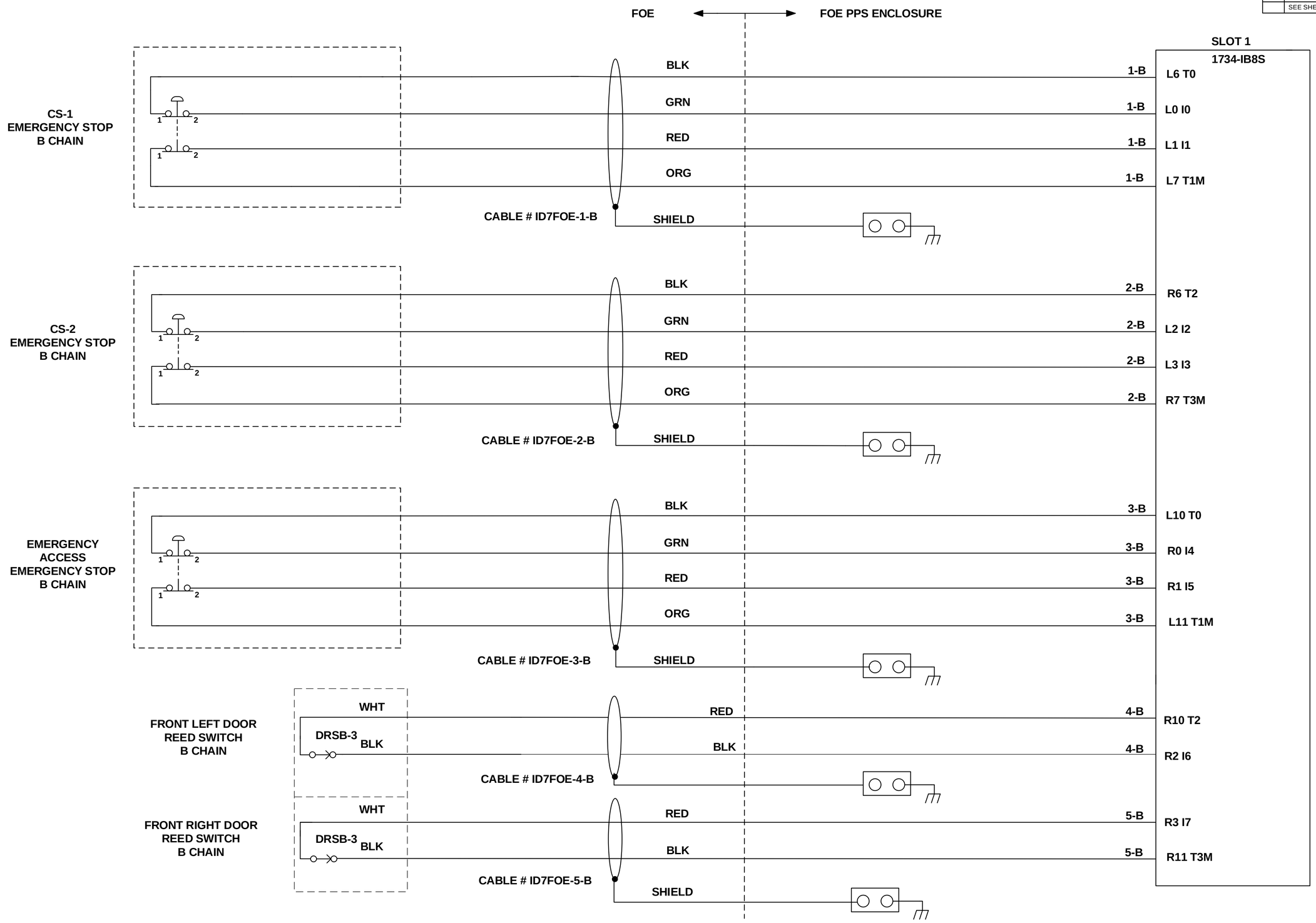

B

LT-EL-BL-EI	LT-EL-BL-EI-PPS-1070-91	A
DRAWING DIRECTORY	DRAWING NUMBER	REV

COMPUTER REPRODUCIBLE | SCALE: N/A | SHEET 22 OF 41

LT-EL-BL-EI-PPS-1070-91

REV	DESCRIPTION	DATE	BY	CHECKED	APP
	SEE SHEET 1				

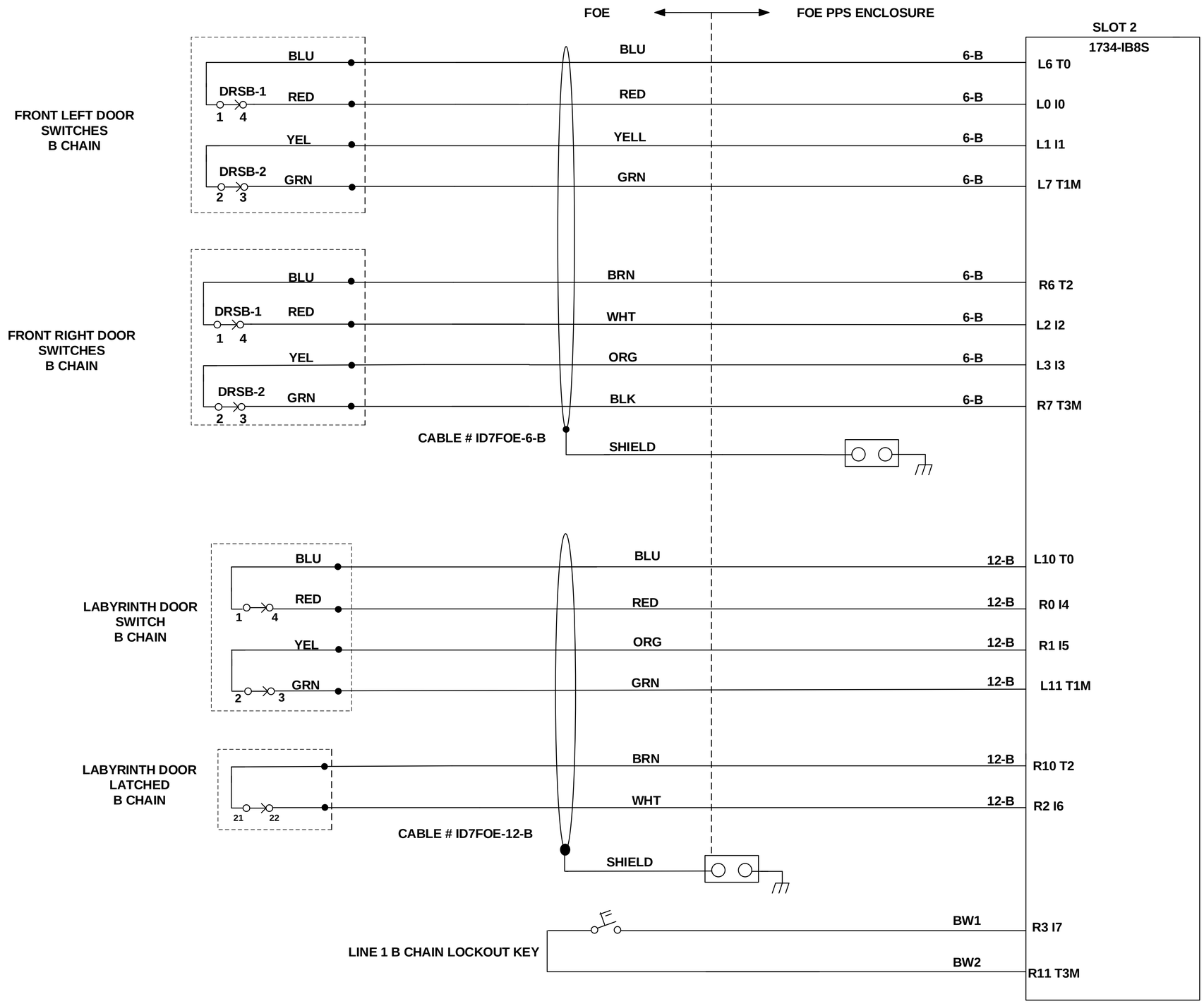

B

LT-EL-BL-EI	LT-EL-BL-EI-PPS-1070-91	A
DRAWING DIRECTORY	DRAWING NUMBER	REV

COMPUTER REPRODUCIBLE | SCALE: N/A | SHEET 23 OF 41

LT-EL-BL-EI-PPS-1070-91

REV	DESCRIPTION	DATE	BY	CHECKED	APP
	SEE SHEET 1				

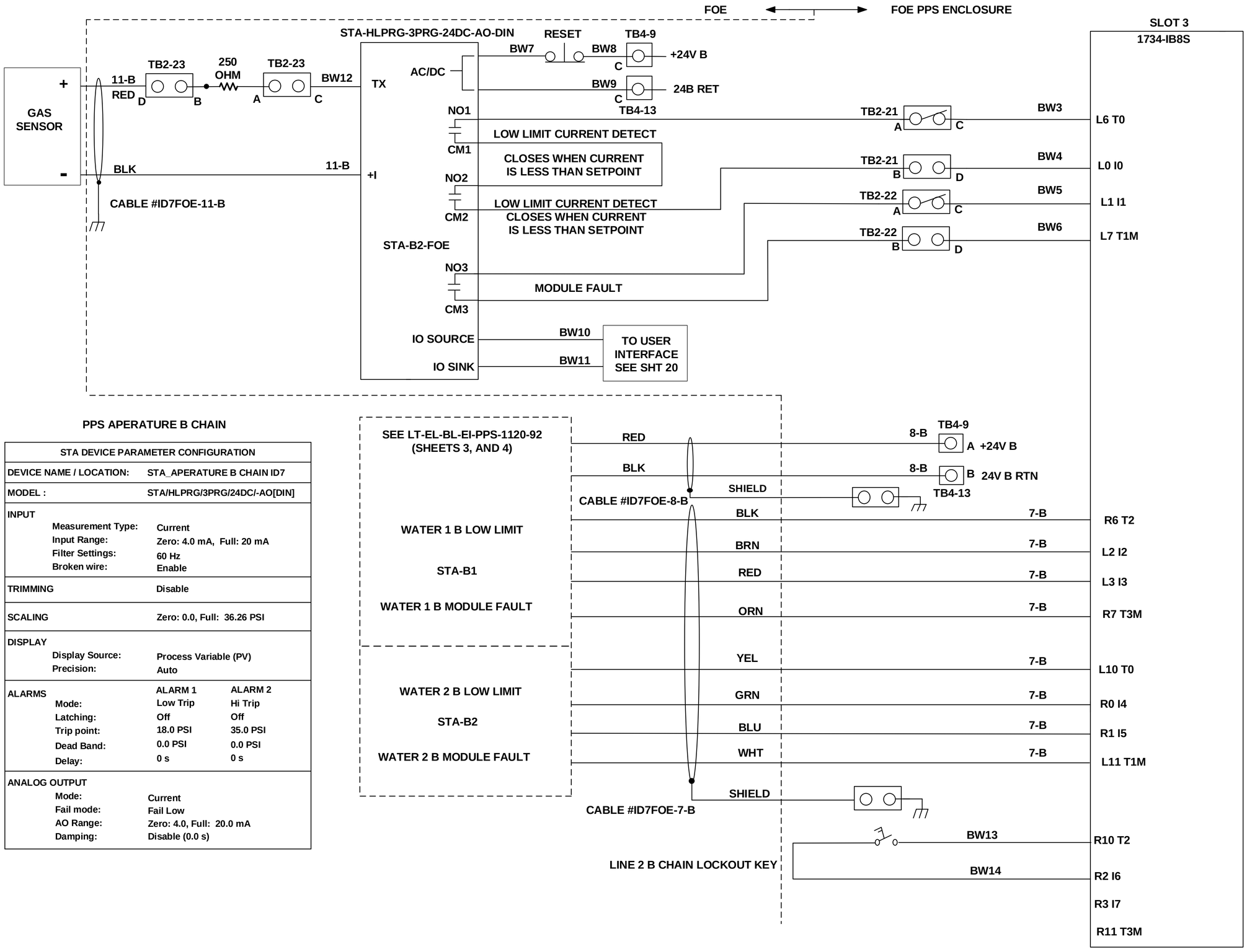

STA DEVICE PARAMETER CONFIGURATION		
DEVICE NAME / LOCATION:	STA_APERATURE B CHAIN ID7	
MODEL :	STA/HLPRG/3PRG/24DC/-AO[DIN]	
INPUT		
Measurement Type:	Current	
Input Range:	Zero: 4.0 mA, Full: 20 mA	
Filter Settings:	60 Hz	
Broken wire:	Enable	
TRIMMING	Disable	
SCALING	Zero: 0.0, Full: 36.26 PSI	
DISPLAY		
Display Source:	Process Variable (PV)	
Precision:	Auto	
ALARMS	ALARM 1	ALARM 2
Mode:	Low Trip	Hi Trip
Latching:	Off	Off
Trip point:	18.0 PSI	35.0 PSI
Dead Band:	0.0 PSI	0.0 PSI
Delay:	0 s	0 s
ANALOG OUTPUT		
Mode:	Current	
Fail mode:	Fail Low	
AO Range:	Zero: 4.0, Full: 20.0 mA	
Damping:	Disable (0.0 s)	

B

LT-EL-BL-EI (DRAWING DIRECTORY)	LT-EL-BL-EI-PPS-1120-91 (DRAWING NUMBER)	A (REV)
COMPUTER REPRODUCABLE	SCALE: N/A	SHEET 24 OF 40

LT-EL-BL-EI-PPS-1120-91

REV	DESCRIPTION	DATE	BY	CHECKED	APP
	SEE SHEET 1				

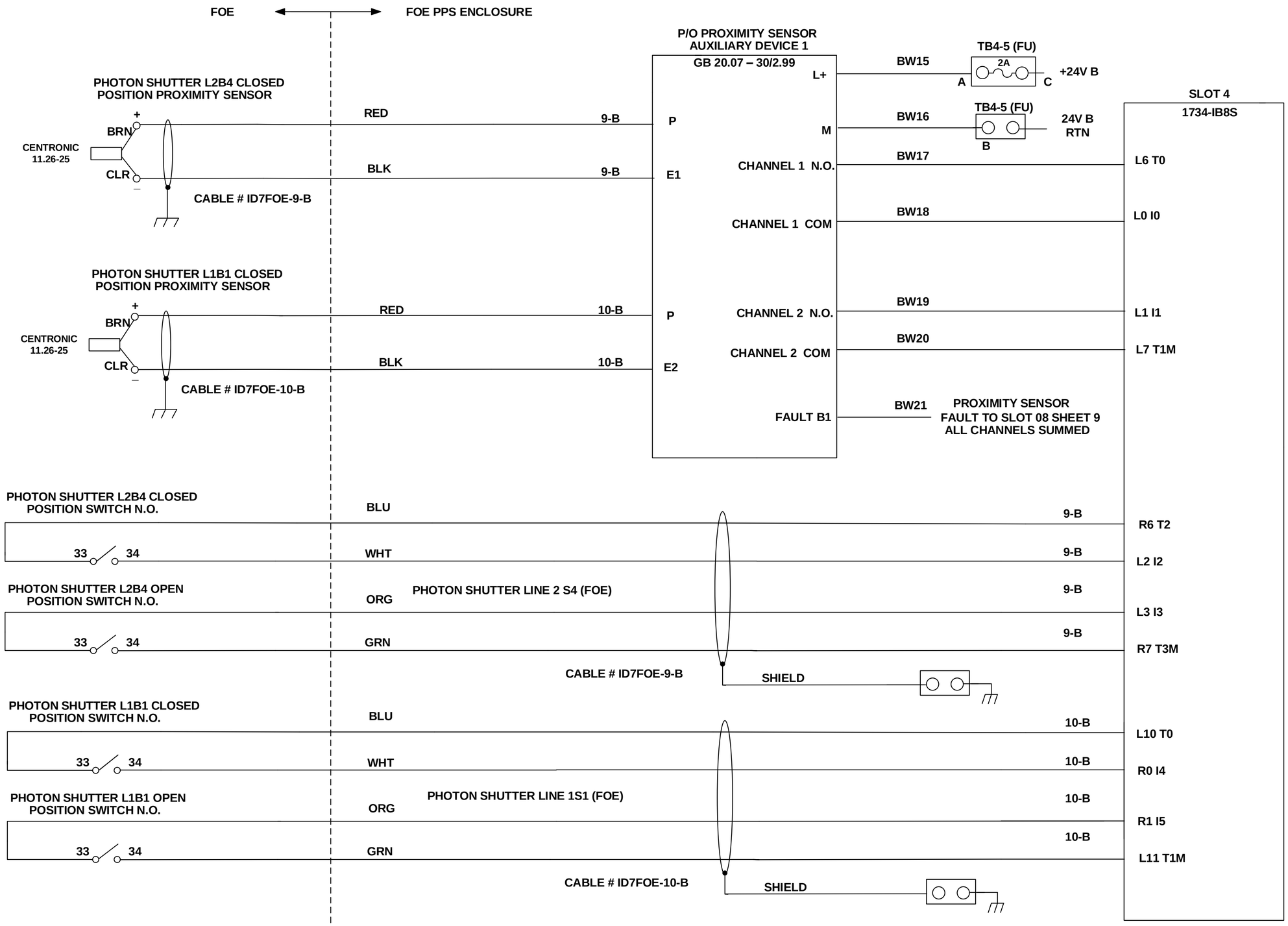

B

LT-EL-BL-EI	LT-EL-BL-EI-PPS-1070-91	A
DRAWING DIRECTORY	DRAWING NUMBER	REV

COMPUTER REPRODUCIBLE | SCALE: N/A | SHEET 25 OF 41

LT-EL-BL-EI-PPS-1070-91

REV	DESCRIPTION	DATE	BY	CHECKED	APP
	SEE SHEET 1				

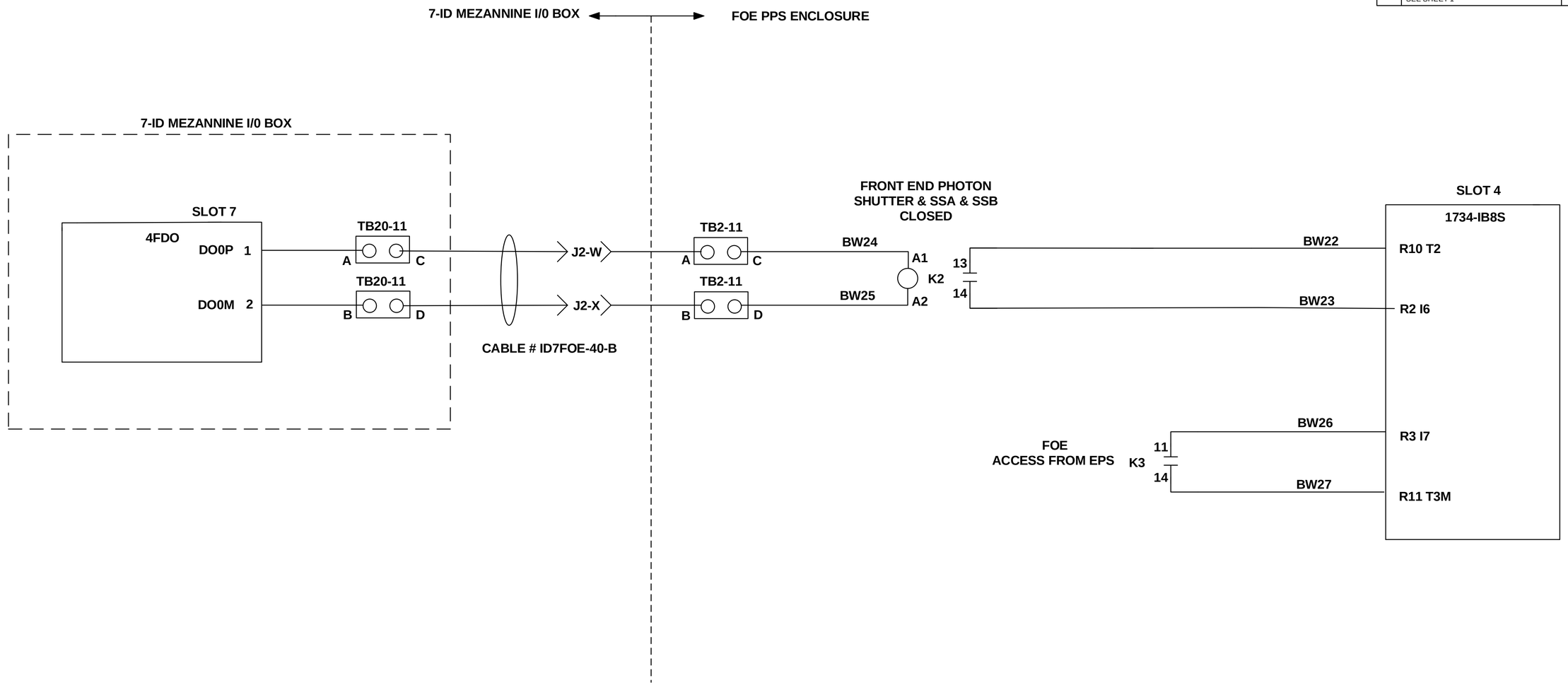

B

LT-EL-BL-EI	LT-EL-BL-EI-PPS-1070-91	A
DRAWING DIRECTORY	DRAWING NUMBER	REV

COMPUTER REPRODUCIBLE | SCALE: N/A | SHEET 26 OF 41

LT-EL-BL-EI-PPS-1070-91

REV	DESCRIPTION	DATE	BY	CHECKED	APP
	SEE SHEET 1				

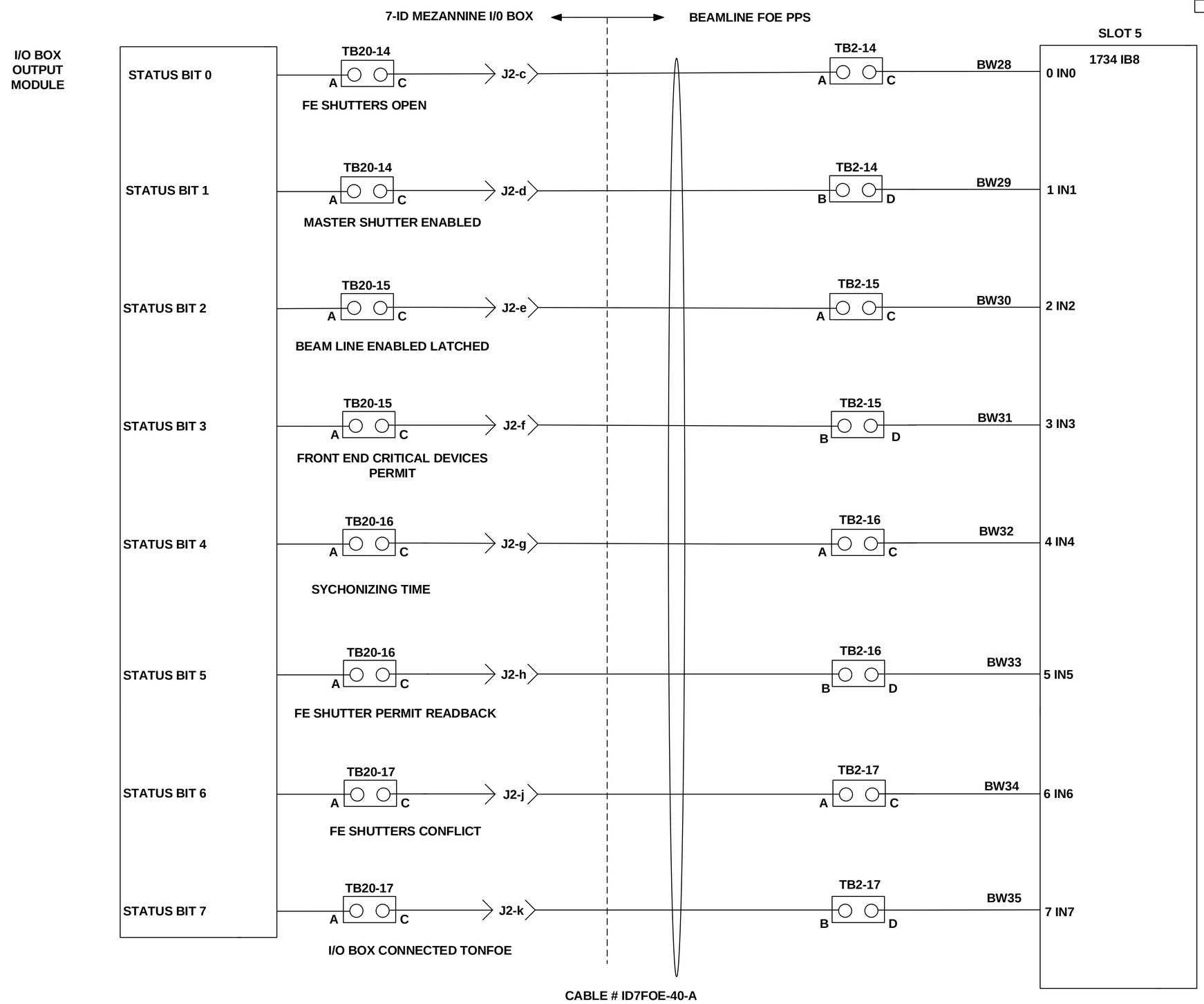

B

LT-EL-BL-EI (DRAWING DIRECTORY)	LT-EL-BL-EI-PPS-1070-91 (DRAWING NUMBER)	A (REV)
COMPUTER REPRODUCIBLE	SCALE: N/A	SHEET 27 OF 41

LT-EL-BL-EI-PPS-1070-91

REV	DESCRIPTION	DATE	BY	CHECKED	APP
	SEE SHEET 1				

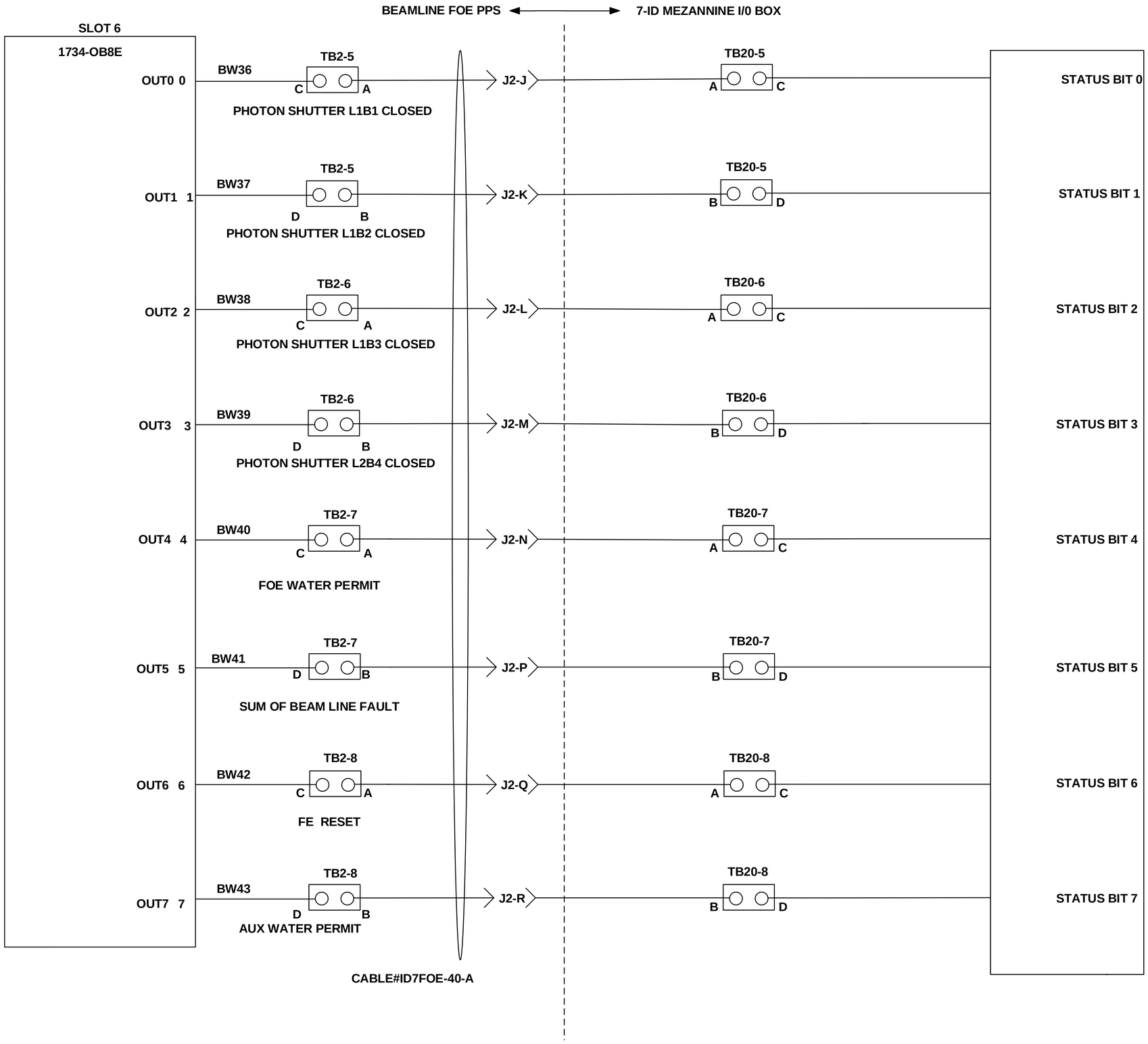

B

LT-EL-BL-EI DRAWING DIRECTORY	LT-EL-BL-EI-PPS-1070-91 DRAWING NUMBER	A REV
COMPUTER REPRODUCIBLE	SCALE: N/A	SHEET 28 OF 41

LT-EL-BL-EI-PPS-1070-91

REV	DESCRIPTION	DATE	BY	CHECKED	APP
	SEE SHEET 1				

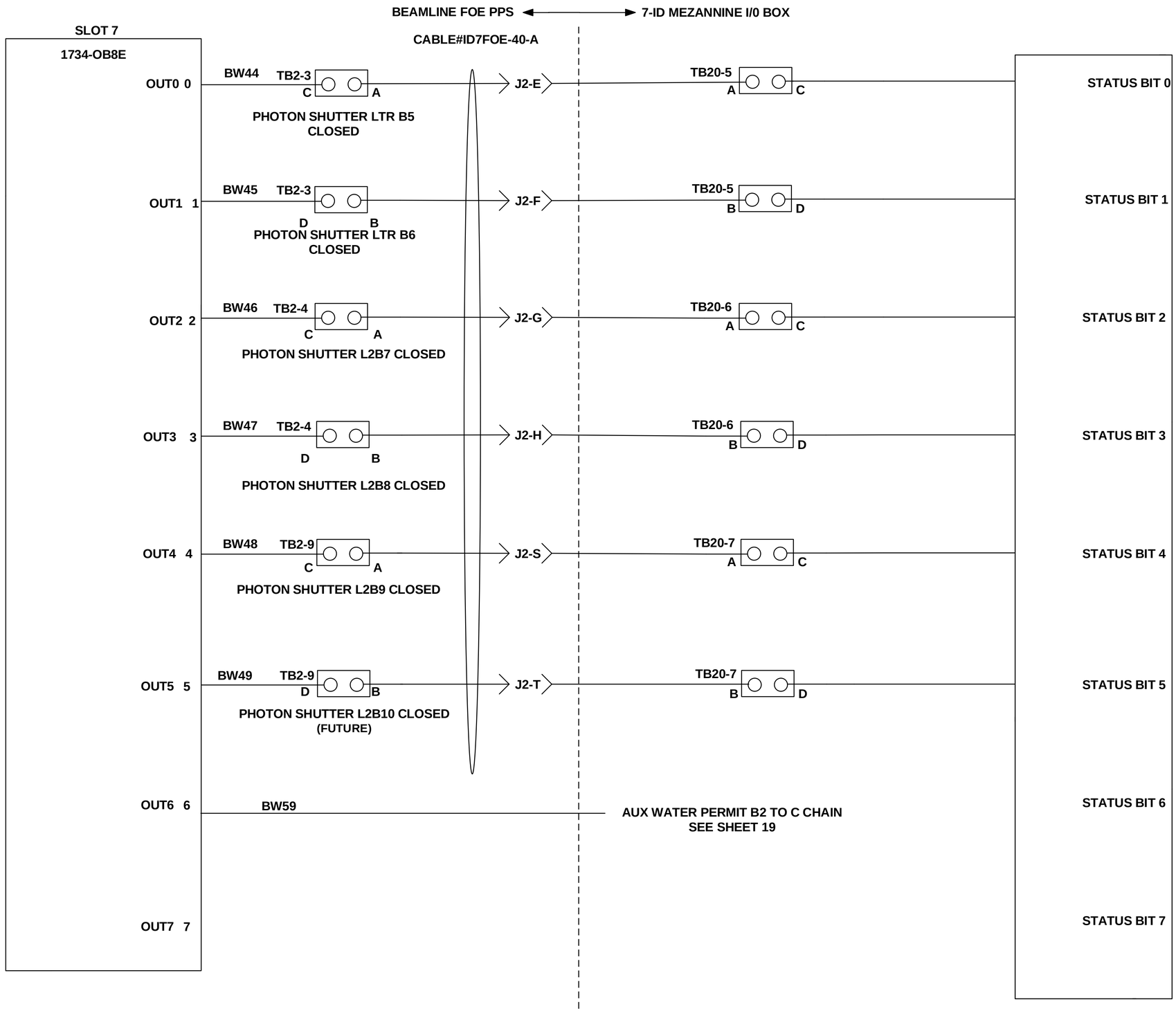

B

LT-EL-BL-EI	LT-EL-BL-EI-PPS-1070-91	A
DRAWING DIRECTORY	DRAWING NUMBER	REV

COMPUTER REPRODUCIBLE | SCALE: N/A | SHEET 29 OF 41

LT-EL-BL-EI-PPS-1070-91

REV	DESCRIPTION	DATE	BY	CHECKED	APP
	SEE SHEET 1				

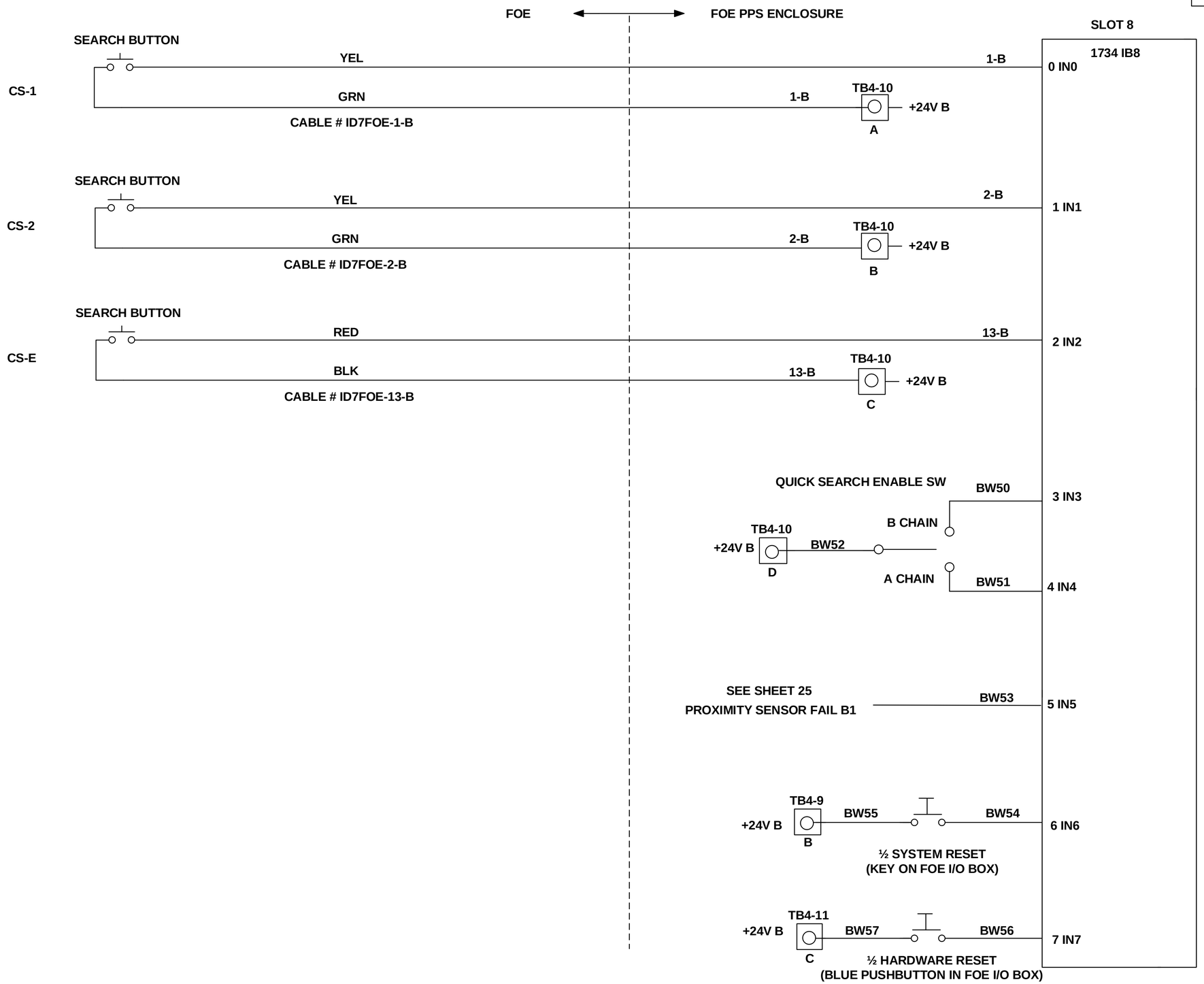

B

LT-EL-BL-EI (DRAWING DIRECTORY)	LT-EL-BL-EI-PPS-1070-91 (DRAWING NUMBER)	A (REV)
COMPUTER REPRODUCIBLE	SCALE: N/A	SHEET 30 OF 41

LT-EL-BL-EI-PPS-1070-91

REV	DESCRIPTION	DATE	BY	CHECKED	APP
	SEE SHEET 1				

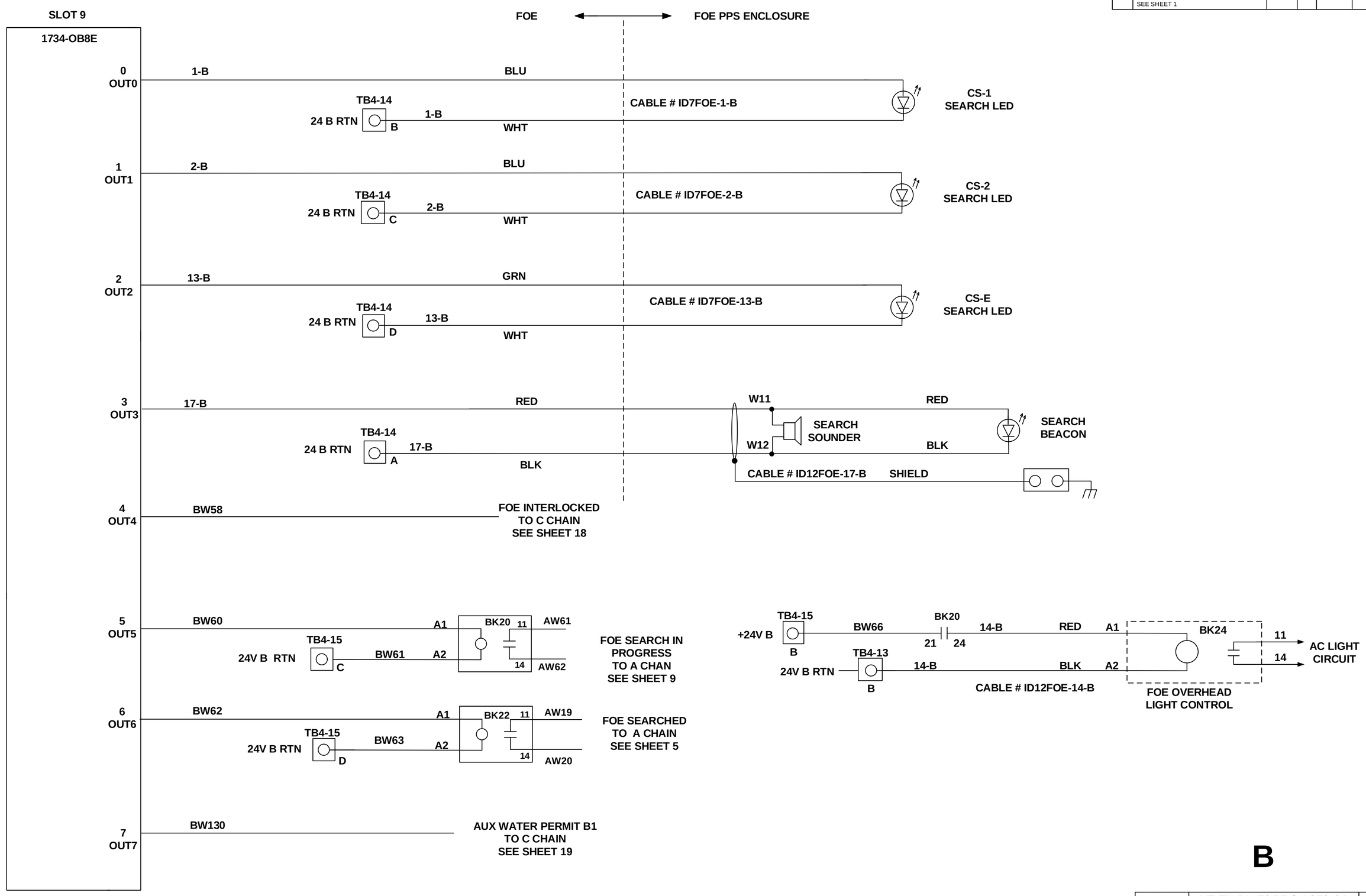

B

LT-EL-BL-EI	LT-EL-BL-EI-PPS-1070-91	A
DRAWING DIRECTORY	DRAWING NUMBER	REV
COMPUTER REPRODUCIBLE	SCALE: N/A	SHEET 31 OF 41

LT-EL-BL-EI-PPS-1070-91

REV	DESCRIPTION	DATE	BY	CHECKED	APP
	SEE SHEET 1				

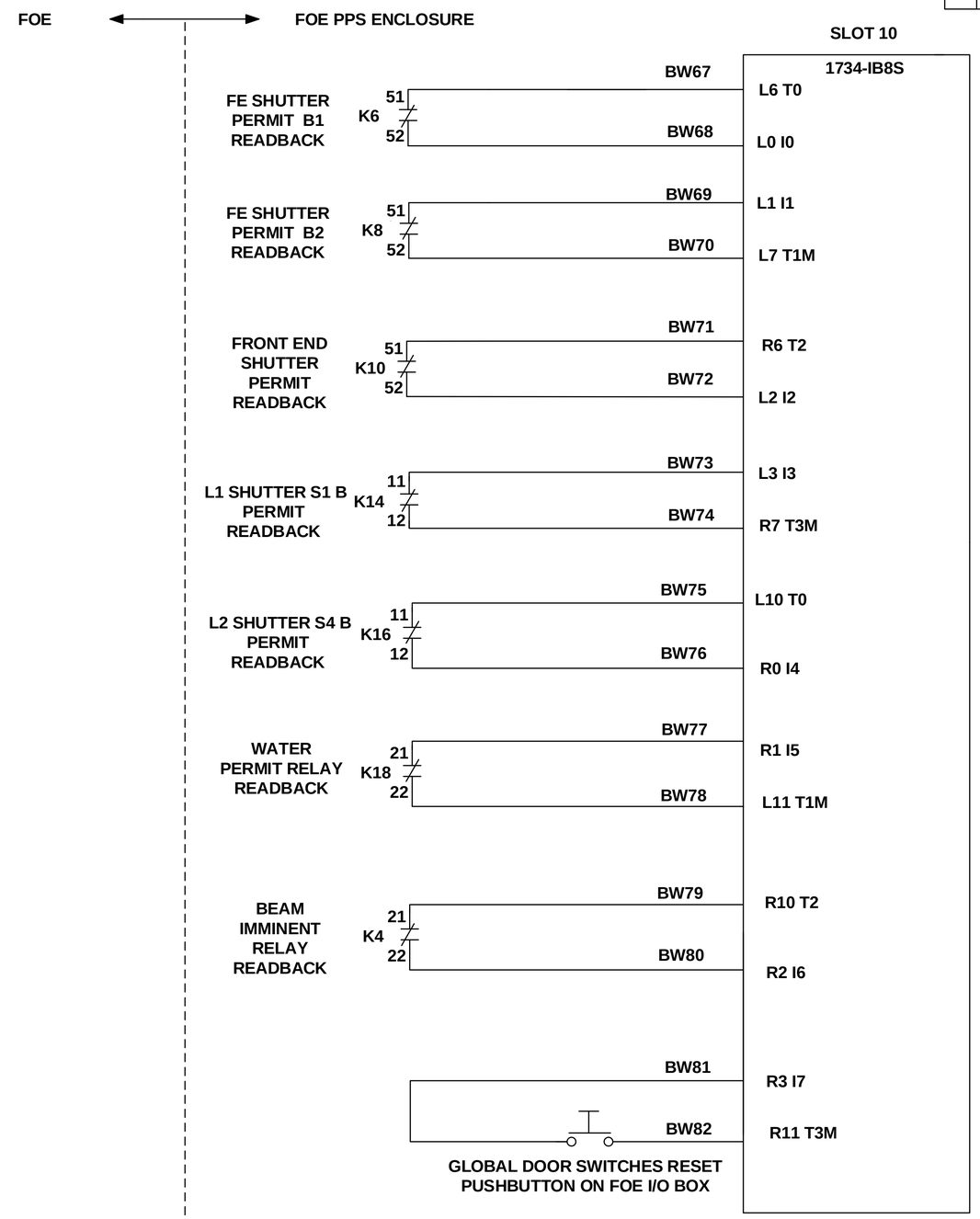

B

LT-EL-BL-EI DRAWING DIRECTORY	LT-EL-BL-EI-PPS-1070-91 DRAWING NUMBER	A REV
COMPUTER REPRODUCIBLE	SCALE: N/A	SHEET 32 OF 41

LT-EL-BL-EI-PPS-1070-91

REV	DESCRIPTION	DATE	BY	CHECKED	APP
	SEE SHEET 1				

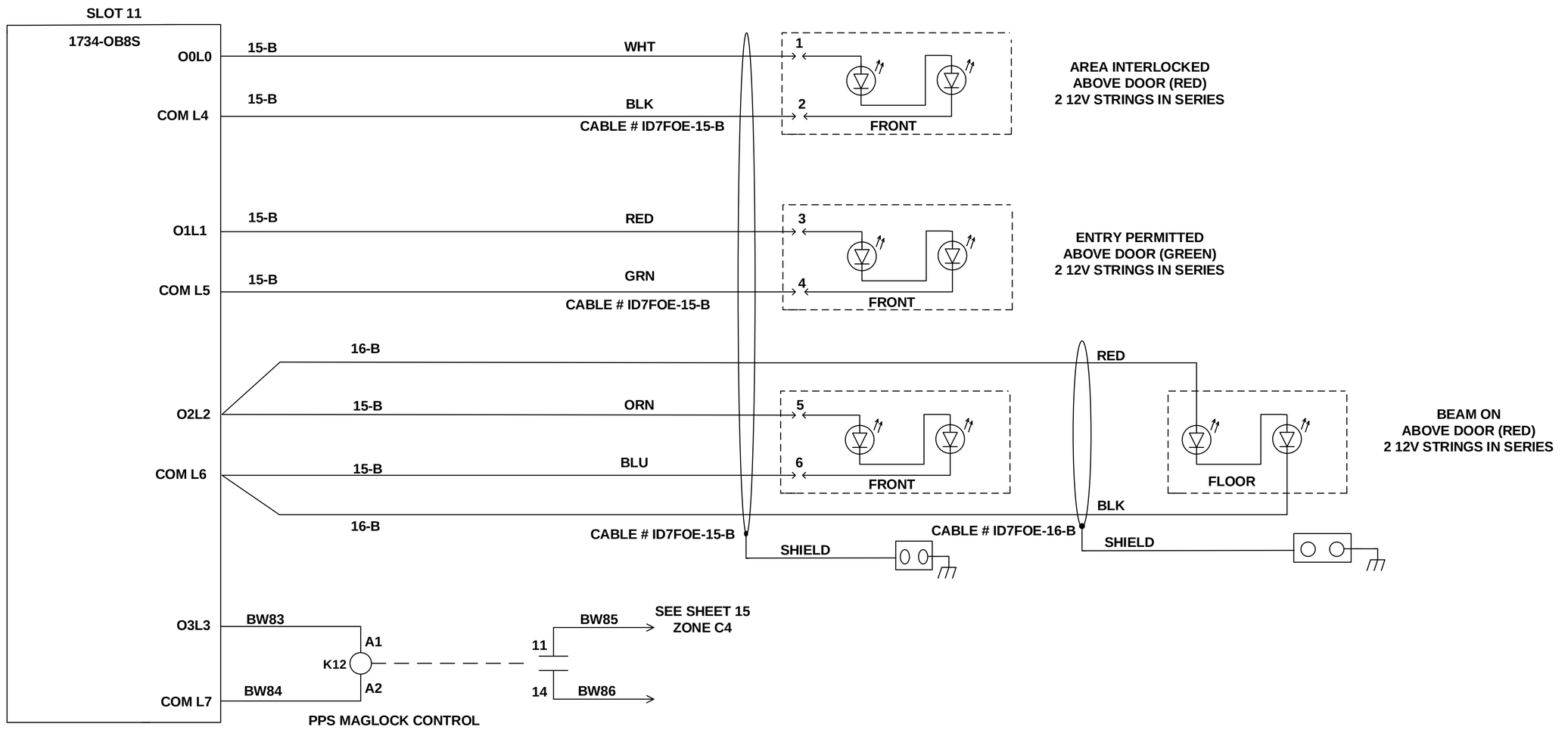

B

LT-EL-BL-EI	LT-EL-BL-EI-PPS-1070-91	A
DRAWING DIRECTORY	DRAWING NUMBER	REV

COMPUTER REPRODUCIBLE | SCALE: N/A | SHEET 33 OF 41

LT-EL-BL-EI-PPS-1070-91

REV	DESCRIPTION	DATE	BY	CHECKED	APP
	SEE SHEET 1				

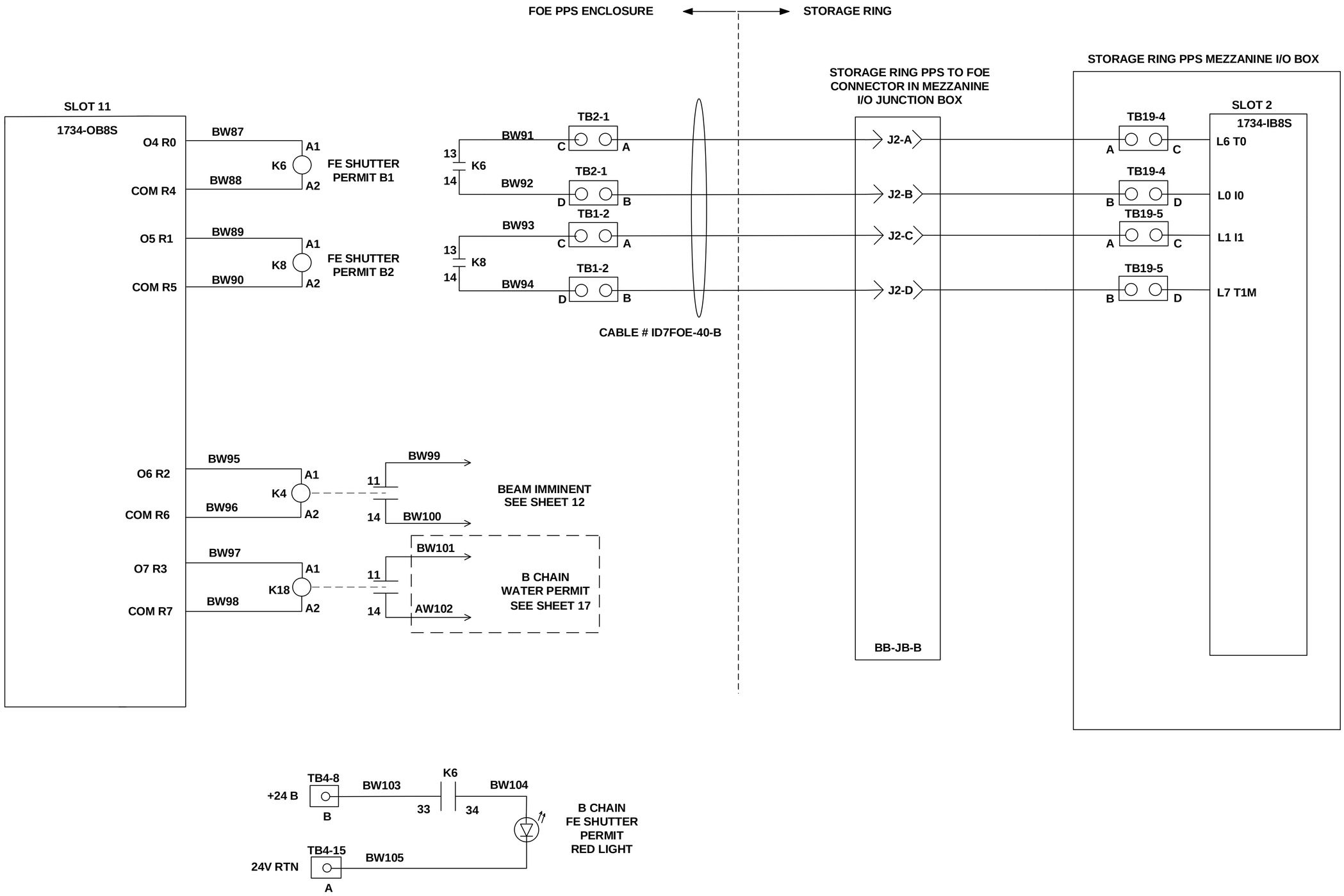

B

LT-EL-BL-EI DRAWING DIRECTORY	LT-EL-BL-EI-PPS-1070-91 DRAWING NUMBER	A REV
COMPUTER REPRODUCIBLE	SCALE: N/A	SHEET 34 OF 41

LT-EL-BL-EI-PPS-1070-91

REV	DESCRIPTION	DATE	BY	CHECKED	APP
	SEE SHEET 1				

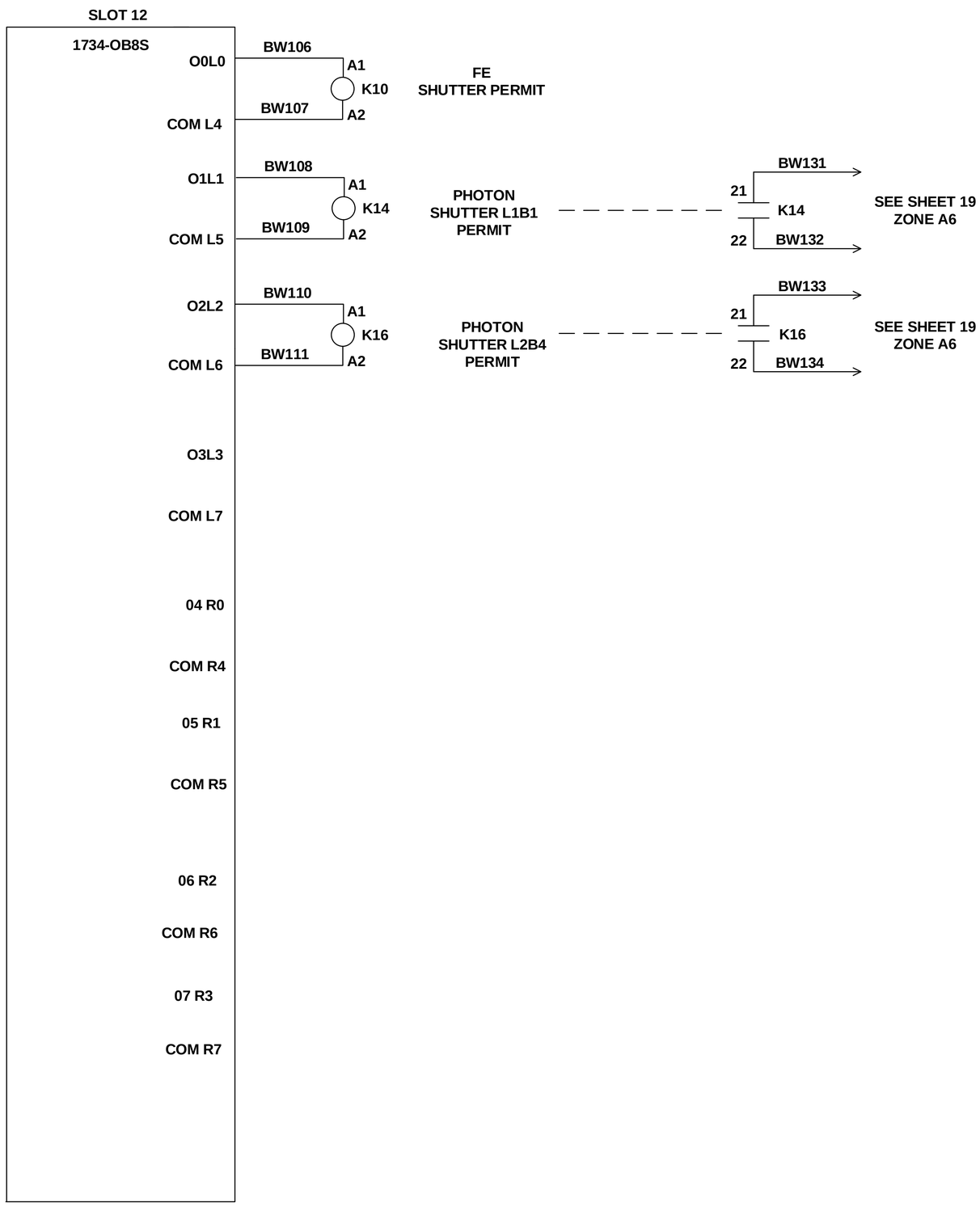

B

LT-EL-BL-EI	LT-EL-BL-EI-PPS-1070-91	A
DRAWING DIRECTORY	DRAWING NUMBER	REV

COMPUTER REPRODUCIBLE | SCALE: N/A | SHEET 35 OF 41

LT-EL-BL-EI-PPS-1070-91

REV	DESCRIPTION	DATE	BY	CHECKED	APP
	SEE SHEET 1				

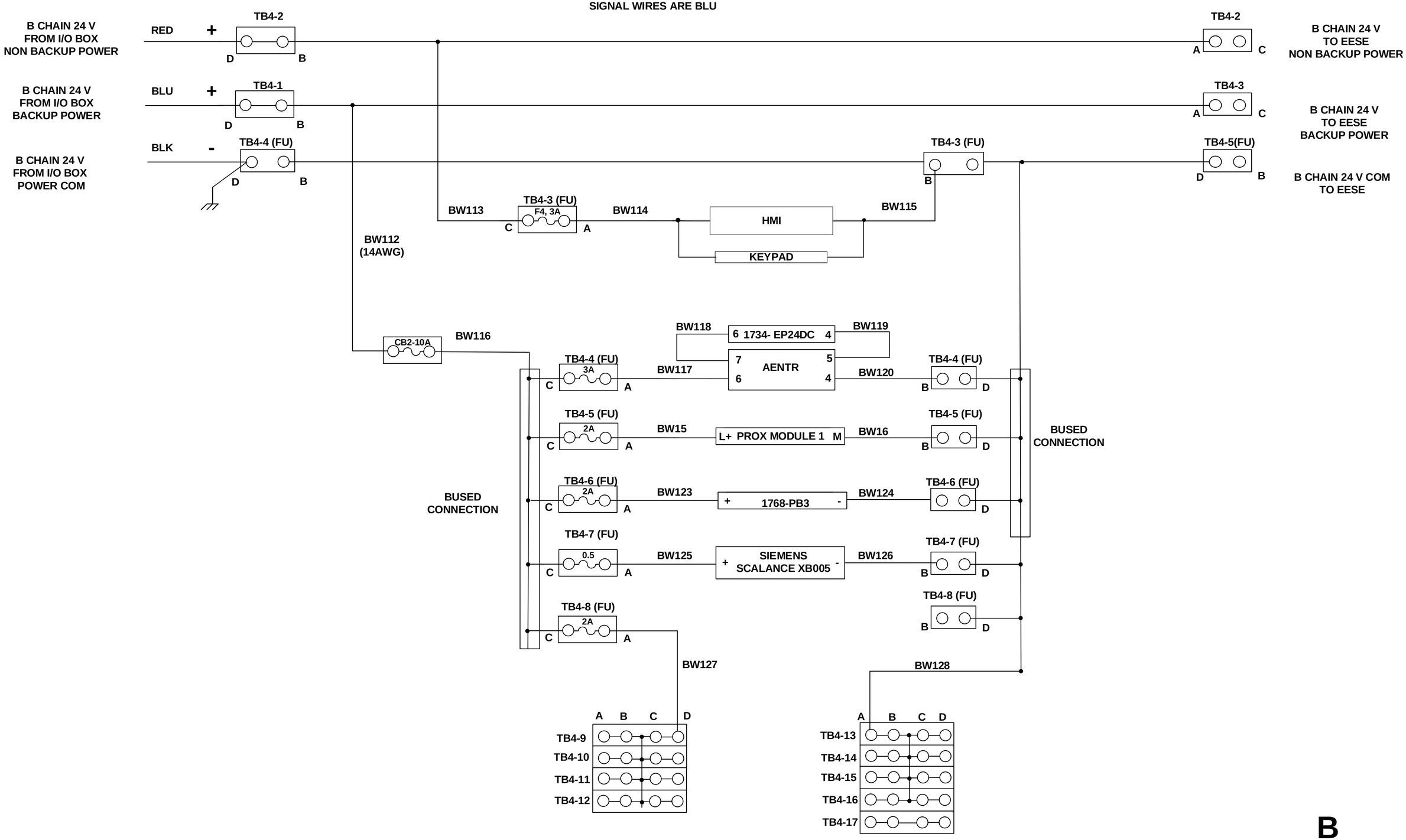

B

LT-EL-BL-EI	LT-EL-BL-EI-PPS-1070-91	A
DRAWING DIRECTORY	DRAWING NUMBER	REV

COMPUTER REPRODUCIBLE | SCALE: N/A | SHEET 36 OF 41

LT-EL-BL-EI-PPS-1070-91

REV	DESCRIPTION	DATE	BY	CHECKED	APP
	SEE SHEET 1				

7-ID NETWORK LAYOUT

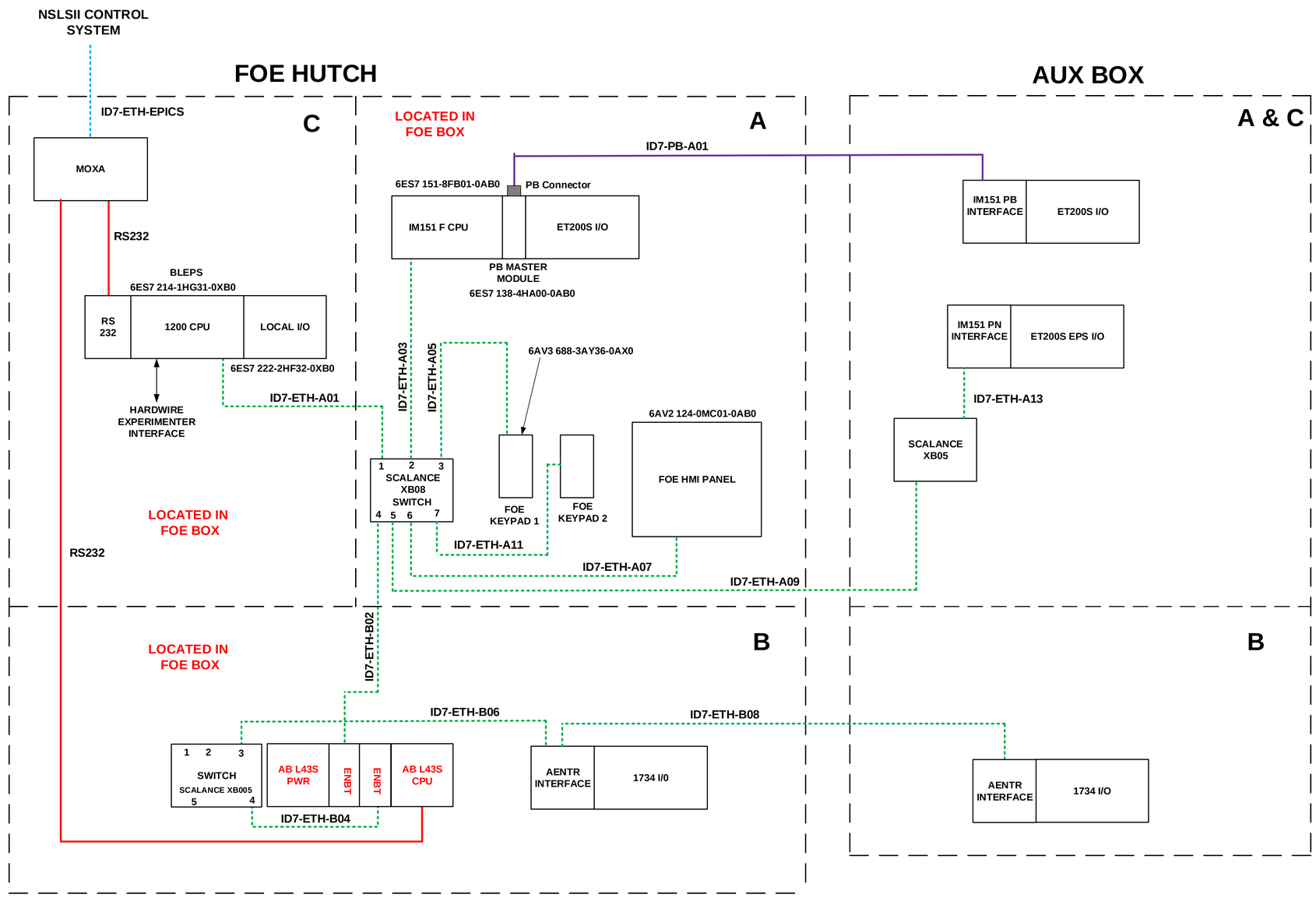

ETHERNET FRONT END SUBNET

ETHERNET BEAMLINE SUBNET

PROFIBUS

RS 232

NOTES:
(1) FOE WATER INTERLOCK IO IS NOT IN ALL BEAMLINE PPS. IF PPS DOES NOT HAS WATER INTERLOCK IO, B CHAIN ETHERNET CABLE NUMBER WILL BE SEQUENTIALLY NAMED AFTER ID7-ETH-004.
(2) BEAM LINE ID7, ID?? HAVE WATER INTERLOCK IO.

LT-EL-BL-EI (DRAWING DIRECTORY)	LT-EL-BL-EI-PPS-1070-91 (DRAWING NUMBER)	A (REV)
COMPUTER REPRODUCIBLE	SCALE: N/A	SHEET 37 OF 41

LT-EL-BL-EI-PPS-1070-91

REV	DESCRIPTION	DATE	BY	CHECKED	APP
	SEE SHEET 1				

A CHAIN

Row 1

CB-1

TB-3

UDK4 End Cover 2775113

End Cap For Fuses: EPDDFL4U

- 1x Ground 3044092
- CIRCUIT BREAKER 10A
- 5x Fuse Holders DDFL4U
- 5X UDK4 2775016
- 1x Ground 3044092
- 4X UDK4 2775016
- 1x Ground 3044092

2X UDK4 2775016

UDK4 End Cover 2775113

- Siemens IM-151 6ES7-151-8FBOI-0AB0
- Profibus 6ES7 138-4HA00-0AB0
- Siemens PME 6ES7-193-4CC20-0AA0
- 4x Dual Slots Siemens 6ES7-193-4CF40-0AA0
- 6x Single Slot Siemens 6ES7-193-4CA40-0AA0
- 3x Dual Slots Siemens 6ES7-193-4CF40-0AA0

B CHAIN

Row 2

TB-1

- End Block E/UK1
- 29x Terminal Block UTTB 2,5: 3044636
- 4x Ground 3044092

End Cap For: D-UTTB 2,5/4 3047293

K1	K5	K13	K19	K21	K15	K17	K3	K7	K9	K11
ABB Relay Socket CR-PSS	ABB Relay Socket CR-PSS	ABB Relay Socket CR-PSS	ABB Relay Socket CR-PSS	ABB Relay Socket CR-PSS	IDEC Relay Socket SF1V-4-07L	IDEC Relay Socket SF1V-4-07L	ABB Relay Socket CR-PSS	Altech Relay OA5601	Altech Relay OA5601	Altech Relay OA5601

TB-5

- 3X TB Konnect It 3 Circuit KN-TL-14
- UDK4 2775016
- 2X Diode TB UTTB 2.5 2DIO/O-UL/ UR-UL
- 1x Ground 3044092

Konnect It End Cover KN-EC-TL

UDK4 End Cover 2775113

Diode TB End Cover 3047293

AUX DEVICE A CHAIN

- Klaschka D-75242

STA A1

- Thermocouple Safety Trip Alarm-Moore: STA/HLPRG/3PRG/24DC-AO
- Siemens Scalance XB005

Row 3

CB-1

TB-4

UDK4 End Cover 2775113

End Cap For Fuses: EPDDFL4U

- CIRCUIT BREAKER 10A
- 5x Fuse Holders DDFL4U
- 3X UDK4 2775016
- 3X UDK4 2775016

2X UDK4 2775016

UDK4 End Cover 2775113

- Allen Bradley Power Supply 1768-PB3 A
- Allen Bradley Ethernet/IP Communication Interface 1768 ENBT/A
- Allen Bradley Ethernet/IP Communication Interface 1768 ENBT/A
- Allen Bradley Compact Guard Logix 1768-L43S/B
- Allen Bradley End Cap 1769-ECR

K6	K8	K10
Phoenix PSR-SCF 24UC Safety Relay Socket 2981444	Phoenix PSR-SCF 24UC Safety Relay Socket 2981444	Phoenix PSR-SCF 24UC Safety Relay Socket 2981444

A HW RESET | B HW RESET | QUICK SEARCH

Amphenol Connector 97-4102A-20-27P

Push Button GCX1114 Front Fixing Adapter M22-IVS Contact Block ECX1040-5

NKK SWITCHES S7F

Row 4

TB-2

- End Block E/UK1
- 23x Terminal Block UTTB 2,5: 3044636
- 4x Ground 3044092

End Cap For: D-UTTB 2,5/4 3047293

K2	K4	K12	K18	K20	K22	K24	K14	K16
Relay Socket ES 50	Relay Socket ES 50	Relay Socket ES 50	Relay Socket ES 50	Relay Socket ES 50	Relay Socket ES 50	Relay Socket ES 50	Elesta Relay Socket SRD-SIM4 H300725	Elesta Relay Socket SRD-SIM4 H300725

- Allen Bradley 1734 AENTR Ethernet Interface
- 10x Single Slots Allen Bradley 1734-Top3
- Power Module 1734 EP24DC
- 8x Single Slots Allen Bradley 1734-Top3

LT-EL-BL-EI	LT-EL-BL-EI-PPS-1070-91	A
DRAWING DIRECTORY	DRAWING NUMBER	REV

COMPUTER REPRODUCIBLE | SCALE: N/A | SHEET 38 OF 41

LT-EL-BL-EI-PPS-1070-91

REV	DESCRIPTION	DATE	BY	CHECKED	APP
	SEE SHEET 1				

Row 5

TB 7

End Cap For Fuses: EPDDFL4U

End Clamp E/UK 1

3x Fuse Holders DDFL4U

5X UDK4 2775016

1x Ground 3044092

3X UDK4 2775016

3x Ground 3044092

PHOENIX CONTACT PLC-BCS-24DC/21

Siemens Scalance XB008

Siemens CM 1241-RS232

Siemens Simatic S7-1200-CPU-1215C DC/DC/RLY

Siemens SM 1223 DC/RLY

Siemens SM 1223 DC/DC

Siemens SM 1223 DC/RLY

Siemens SM 1223 DC/RLY

MOXA Nport IA5-250A

AUX DEVICE B CHAIN

Klaschka D-75242

STA B1

Thermocouple Safety Trip Alarm-Moore: STA/HLPRG/3PRG/24DC-AO

LT-EL-BL-EI-PPS-1070-91

LT-EL-BL-EI (DRAWING DIRECTORY)	LT-EL-BL-EI-PPS-1070-91 (DRAWING NUMBER)	A (REV)
COMPUTER REPRODUCIBLE	SCALE: N/A	SHEET 39 OF 41

REV	DESCRIPTION	DATE	BY	CHECKED	APP
	SEE SHEET 1				

ROW 1:						
	[20]					
	[2]					
CB 1	WMZS1B10	N/A	Circuit Breaker B10	Eaton		
TB 3	[19]	x2 [13]	[6]	x6 [8]		
	[19]	x3 [13]	[2]	[19]	x4 [13]	[2]
SLOT	MODULE	SOCKET	DESCRIPTION	VENDOR		
	6ES7-151-8FB00-0AB0	N/A	1-151-8F ETHERNET INTERFAC	SIEMENS		
	6ES7-138-4HA00-0AB0	N/A	DP MASTER	SIEMENS		
1	6ES7-138-4CA50-0AB0	6ES7-193-4CC20-0AA0	POWER MODULE PM-E	SIEMENS		
2	6ES7-138-4FA04-0AB0	6ES7-193-4CF40-0AA0	4/8FDI SAFETY INPUT	SIEMENS		
3	6ES7-138-4FA04-0AB0	6ES7-193-4CF40-0AA0	4/8FDI SAFETY INPUT	SIEMENS		
4	6ES7-138-4FA04-0AB0	6ES7-193-4CF40-0AA0	4/8FDI SAFETY INPUT	SIEMENS		
5	6ES7-131-4BF00-0AB0	6ES7-193-4CA40-0AA0	8DI STANDARD IN	SIEMENS		
6	6ES7-138-4CA50-0AB0	6ES7-193-4CC20-0AA0	POWER MODULE PM-E	SIEMENS		
7	6ES7-132-4BF00-0AA0	6ES7-193-4CA40-0AA0	8DO STANDARD OUT	SIEMENS		
8	6ES7-131-4BF00-0AB0	6ES7-193-4CA40-0AA0	8DI STANDARD IN	SIEMENS		
9	6ES7-131-4BF00-0AB0	6ES7-193-4CA40-0AA0	8DI STANDARD IN	SIEMENS		
10	6ES7-132-4BF00-0AA0	6ES7-193-4CA40-0AA0	8DO STANDARD OUT	SIEMENS		
11	6ES7-138-4FB03-0AB0	6ES7-193-4CF40-0AA0	4FDO SAFETY OUTPUT	SIEMENS		
12	6ES7-138-4FB03-0AB0	6ES7-193-4CF40-0AA0	4FDO SAFETY OUTPUT	SIEMENS		
13	6ES7-138-4FB03-0AB0	6ES7-193-4CF40-0AA0	4FDO SAFETY OUTPUT	SIEMENS		
14	6ES7-193-4JA00-0AA0	N/A	SOCKET COVER	SIEMENS		
K22	PLC-RSC-24DC/21AU		RELAY	PHOENIX		
K25	PLC-RSC-24DC/21AU		RELAY	PHOENIX		
K29	PLC-RSC-24DC/21AU		RELAY	PHOENIX		
ROW 2:						
TB 1	[2]	[2]	[20]	x81 [1]	[2]	[2]
RELAY	MODULE	SOCKET	DESCRIPTION	VENDOR		
K1	OW5669.12/983/61	RT 78626	RELAY	SHRACK		
K3	OW5669.12/983/61	RT 78626	RELAY	SHRACK		
K5	OW5669.12/983/61	RT 78626	RELAY	SHRACK		
K13	OW5669.12/983/61	RT 78626	RELAY	SHRACK		
K15	RF1V-3A1BL-D24	SF1V-4-07L	RELAY	IDEC		
K17	RF1V-3A1BL-D24	SF1V-4-07L	RELAY	IDEC		
K7	OA5601	N/A	ALTECH RELAY	BNL		
K9	OA5601	N/A	ALTECH RELAY	BNL		
K11	OA5601	N/A	ALTECH RELAY	BNL		

ROW 3:						
	[20]					
	[2]					
CB 2	WMZS1B10	N/A	Circuit Breaker B10	Eaton		
TB 4	[19]	x2 [13]	[6]	x4 [8]		
	[19]	x3 [13]	[2]	[19]	x3 [13]	[2]
SLOT	MODULE	SOCKET	DESCRIPTION	VENDOR		
	1734-AENTR	N/A	24V DC EHTERNET ADAPTER	AB		
1	1734-IB8S	1734-TOP3 (2)	8 INPUT SAFETY	AB		
2	1734-IB8S	1734-TOP3 (2)	8 INPUT SAFETY	AB		
3	1734-IB8S	1734-TOP3 (2)	8 INPUT SAFETY	AB		
4	1734-IB8S	1734-TOP3 (2)	8 INPUT SAFETY	AB		
5	1734-IB8	1734-TOP3	STANDARD 8 INPUT MODULE	AB		
6	1734-EP24DC	N/A	POWER MODULE PM-E	AB		
	1734-OB8E	1734-TOP3	8 CURRENT SOURCE	AB		
7	1734-IB8	1734-TOP3	STANDARD 8 INPUT MODULE	AB		
8	1734-IB8S	1734-TOP3 (2)	8 INPUT SAFETY	AB		
9	1734-OW4	1734-TOP3	4 FORM RELAY MODULE	AB		
10	1734-OW4	1734-TOP3	4 FORM RELAY MODULE	AB		
11	1734-OB8S	1734-TOP3 (2)	8 OUTPUT SAFETY	AB		
12	1734-OB8S	1734-TOP3 (2)	8 OUTPUT SAFETY	AB		
	[2]	[2]				
AMPLIFIER	ZSS2/b00ca-1.68	N/A	SENSOR SWITCH AMPLIFIER	KLASCHKA		
AMPLIFIER	ZSS2/b00ca-1.68	N/A	SENSOR SWITCH AMPLIFIER	KLASCHKA		
TB 5	[15]	x3 [14]	[19]	[13]	x4 [16]	[17]
RELAY	MODULE	SOCKET	DESCRIPTION	VENDOR		
K19	OW5669.12/983/61	RT 78626	RELAY	SHRACK		
K21	OW5669.12/983/61	RT 78626	RELAY	SHRACK		
K23	OW5669.12/983/61	RT 78626	RELAY	SHRACK		
	[2]	[2]				
	[20]					
ROW 4:						
	[20]					
	[2]	[2]	[2]	[2]		
TB 2	[3]	x70 [1]				
	[2]	[2]	[2]			
RELAY	MODULE	SOCKET	DESCRIPTION	VENDOR		
K2	SGR282Z	RT 78626	RELAY	SHRACK		
K4	SGR282Z	RT 78626	RELAY	SHRACK		
K12	SGR282Z	RT 78626	RELAY	SHRACK		
K18	SGR282Z	RT 78626	RELAY	SHRACK		
K14	SIM222 24VDC	SRD-SIM4	24V RELAY	ELESTA		
K16	SIM222 24VDC	SRD-SIM4	24V RELAY	ELESTA		
K6	2981444		PSR-SCF 24UC SAFETY RELAY	PHOENIX		
K8	2981444		PSR-SCF 24UC SAFETY RELAY	PHOENIX		
K10	2981444		PSR-SCF 24UC SAFETY RELAY	PHOENIX		

LT-EL-BL-EI-PPS-1070-91

LT-EL-BL-EI (DRAWING DIRECTORY)	LT-EL-BL-EI-PPS-1070-91 (DRAWING NUMBER)	A (REV)
COMPUTER REPRODUCIBLE	SCALE: N/A	SHEET 40 OF 41

REV	DESCRIPTION	DATE	BY	CHECKED	APP
	SEE SHEET 1				

7-ID FOE CABLE LIST

Cable Num.	CHAIN	From LOCATION	To LOCATION	Conductors Needed
ID7FOE-1-A	A	FOE	CS1 Emergency stop	6
ID7FOE-1-B	B	FOE	CS1 (Emergency stop/SB1/LED)	8
ID7FOE-2-A	A	FOE	CS2 Emergency stop	6
ID7FOE-2-B	B	FOE	CS2 (Emergency stop/SB2/LED)	8
ID7FOE-3-A	A	FOE	Emergency Access E-Stop	6
ID7FOE-3-B	B	FOE	Emergency Access E-Stop	6
ID7FOE-4-A	A	FOE	FRONT Left Mag Lock Switch/Coil	4
ID7FOE-4-B	B	FOE	FRONT Left REED Switch(In Maglock)	2
ID7FOE-5-A	A	FOE	FRONT Right Mag Lock Switch/Coil	4
ID7FOE-5-B	B	FOE	FRONT Right REED Switch(In Maglock)	2
ID7FOE-6-A	A	FOE	FRONT Left & Right Door Switches	8
ID7FOE-6-B	B	FOE	FRONT Left & Right Door Switches	8
ID7FOE-7-A	A	FOE	PPS Water Interlock A (Channels 1&2)	8
ID7FOE-7-B	B	FOE	PPS Water Interlock B (Channels 1&2)	8
ID7FOE-8-A	A	FOE	Water Box Power A	2
ID7FOE-8-B	B	FOE	Water Box Power B	2
ID7FOE-9-A	A	FOE	Photon shutter A L1S1 Proximity sensor, OPEN and Closed Switches	6
ID7FOE-9-B	B	FOE	Photon shutter B L1S1 Proximity sensor, OPEN and Closed Switches	6
ID7FOE-10-A	A	FOE	Photon shutter A L2S4 Proximity sensor, OPEN and Closed Switches	6
ID7FOE-10-B	B	FOE	Photon shutter B L2S4 Proximity sensor, OPEN and Closed Switches	6
ID7FOE-11-A	A	FOE	Gas Sensor Power	2
ID7FOE-11-B	B	FOE	Gas Sensor Power	2
ID7FOE-12-A	A	FOE	Labyrinth switches & Latch	6
ID7FOE-12-B	B	FOE	Labyrinth switches & Latch	6
ID7FOE-13-A	A	FOE	Access To Chain	2
ID7FOE-13-B	B	FOE	CSE Btn & LED	4
ID7FOE-14-A	A	FOE	SPARE	
ID7FOE-14-B	B	FOE	OverHead Lights	2
ID7FOE-15-A	A	FOE	FOE A Chain Interlock, Entry Permit, Beam On Signs	6
ID7FOE-15-B	B	FOE	FOE B Chain Interlock, Entry Permit, Beam On Signs	6
ID7FOE-16-A	A	FOE	Floor Beam ON Sign	2
ID7FOE-16-B	B	FOE	Floor Beam ON Sign	2
ID7FOE-17-A	A	FOE	Beam Imminent Beacon & Sounder	4
ID7FOE-17 -B	B	FOE	Search Sounder	2
ID7FOE-18-A	A	FOE	Photon shutter L1A1 solenoid	2
ID7FOE-18-B	B	FOE	Photon shutter L1B1 solenoid	2
ID7FOE-19-A	A	FOE	Photon shutter L2A4 solenoid	2
ID7FOE-19-B	B	FOE	Photon shutter L2B4 solenoid	2
ID7FOE-20-A	A	FOE	Door Opener Inhibit to Door Controller +SPARE	4
ID7FOE-20-B	B	FOE	SPARE	
ID7FOE-21-A	A	FOE	SPARE	
ID7FOE-21-B	B	FOE	SPARE	
ID7FOE-22-A	A	FOE	SPARE	
ID7FOE-22-B	B	FOE	SPARE	
ID7FOE-40-A	A	FOE	Storage Ring PPS IO BOX	39
ID7FOE-40-B	B	FOE	Storage Ring PPS IO BOX	39
SPARE				
ID7EPS-1		EPS	Photon shutter L1A1 Open/Closed switches for EPS	4
ID7EPS-2		EPS	Photon shutter L1B1 Open/Closed switches for EPS	4
ID7EPS-3		EPS	Photon shutter L2A4 Open/Closed switches for EPS	4
ID7EPS-4		EPS	Photon shutter L2B4 Open/Closed switches for EPS	4
ID7EPS-5		EPS	Experimenter Bypass to GV2 +SPARE	4
ID7EPS-6		EPS	SPARE	
COMMUNICATION CABLES				
ID7-ETH-A09	A	FOE-AUX I/O	ETHERNET CABLE FROM FOE TO AUX BOX EPS	
ID7-ETH-A8	B	FOE-AUX I/O	ETHERNET CABLE FROM FOE TO AUX BOX B CHAIN	
ID7-PB-A01	A	FOE-AUX I/O	ProfiBus Cable from FOE to AUX BOX A CHAIN	
POWER CABLES				
	A	lezzanine I/O BOX-FOE	10/3 POWER A	
	B	lezzanine I/O BOX-FOI	10/3 POWER B	
	A	FOE-AUX BOX	10/3 POWER A	
	B	FOE-AUX BOX	10/3 POWER B	

LT-EL-BL-EI-PPS-1070-91

LT-EL-BL-EI (DRAWING DIRECTORY)	LT-EL-BL-EI-PPS-1070-91 (DRAWING NUMBER)	A (REV)
COMPUTER REPRODUCIBLE	SCALE: N/A	SHEET 41 OF 41

REV	DESCRIPTION	DATE	BY	CHECKED	APP
A	INITIAL RELEASE	01/24/2018	SEJ	JM	SB

WATER FLOW INTERLOCK
CHANNEL 1 A CHAIN

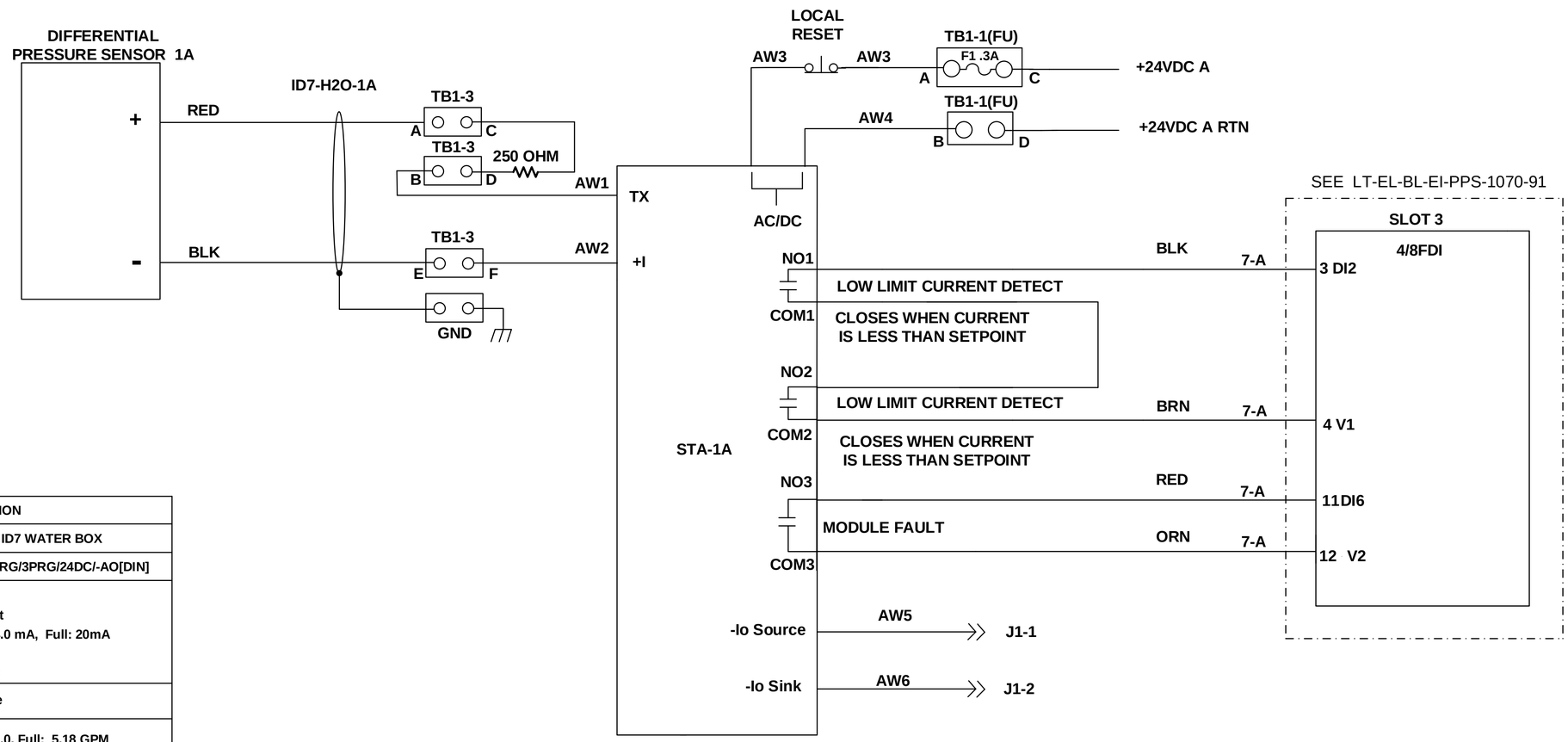

STA DEVICE PARAMETER CONFIGURATION		
DEVICE NAME / LOCATION:	STA-1A / ID7 WATER BOX	
MODEL :	STA/HLPRG/3PRG/24DC/-AO[DIN]	
INPUT		
Measurement Type:	Current	
Input Range:	Zero: 4.0 mA, Full: 20mA	
Filter Settings:	60 Hz	
Broken wire:	Enable	
TRIMMING	Disable	
SCALING	Zero: 0.0, Full: 5.18 GPM	
DISPLAY		
Display Source:	Process Variable (PV)	
Precision:	Auto	
ALARMS	ALARM 1	ALARM 2
Mode:	Low Trip	Hi Trip
Latching:	Off	Off
Trip point:	1.3 GPM	0.0 GPM
Dead Band:	0.0 GPM	0.0 GPM
Delay:	0 s	0 s
ANALOG OUTPUT		
Mode:	Current	
Fail mode:	Fail Low	
AO Range:	Zero: 4.0, Full: 20.0 mA	
Damping:	Disable (0.0 s)	

A

BROOKHAVEN NATIONAL LABORATORY

BROOKHAVEN NATIONAL LABORATORY
BROOKHAVEN SCIENCE ASSOCIATES
UPTON, NEW YORK 11973
Exploring Life's Mysteries, Protecting its Future

NSLSII NATIONAL SYNCHROTRON LIGHT SOURCE II

UNLESS OTHERWISE SPECIFIED INTEGER TOLERANCES ± .06
DECIMAL TOLERANCES .X ± .030 .XX ± .015 .XXX ± .010
ANGULAR TOLERANCE ± 0.5°
UNSPECIFIED RADII .02 MAX
125 BREAK SHARP CORNERS AND EDGES
FINISH MAX .03 MIN .005

UNLESS OTHERWISE SPECIFIED DIMENSIONS ARE IN INCHES DIMENSIONS IN [ ] ARE MILLIMETERS EQUIV. FOR REF. ONLY
INTERPRET DRAWING AS PER ANSI Y14.5 OR Y32.2
ESH&Q RISK LEVEL A-1
OUTSTANDING ECN'S

		DATE
DRWN BY	S. JARZABKOWSKI	1/24/2018
CHK BY	J.MALLEY	1/26/2018
ENG APP	S. BUDA	1/24/2018
SUPV APP	G. GANETIS	1/26/2018
QA APP	E.CHESWICK	1/26/2018
ESH APP	R. LEE	1/26/2018

JOB NUMBER | USED ON DWG. NO.

WIRING DIAGRAM,
7-ID – H20 (SST-H2O)
A CHAIN AND B CHAIN

LT-EL-BL-EI (DRAWING DIRECTORY) | LT-EL-BL-EI-PPS-1070-92 (DRAWING NUMBER) | A (REV)

COMPUTER REPRODUCABLE | SCALE: N/A | SHEET 1 OF 8

LT-EL-BL-EI-PPS-1070-92

REV	DESCRIPTION	DATE	BY	CHECKED	APP
	SEE SHEET 1				

WATER FLOW INTERLOCK
CHANNEL 2 A CHAIN

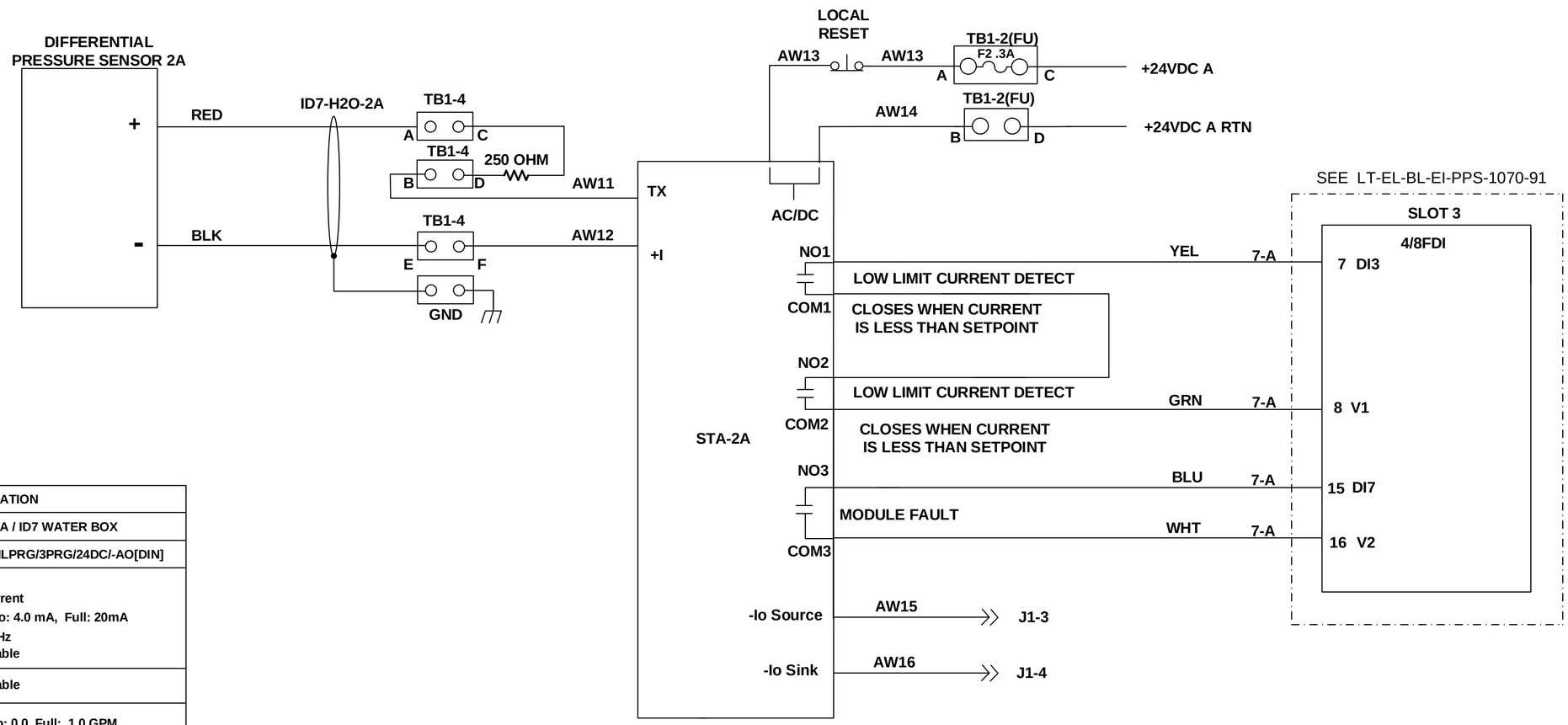

STA DEVICE PARAMETER CONFIGURATION		
DEVICE NAME / LOCATION:	STA-2A / ID7 WATER BOX	
MODEL :	STA/HLPRG/3PRG/24DC/-AO[DIN]	
INPUT		
Measurement Type:	Current	
Input Range:	Zero: 4.0 mA, Full: 20mA	
Filter Settings:	60 Hz	
Broken wire:	Enable	
TRIMMING	Disable	
SCALING	Zero: 0.0, Full: 1.0 GPM	
DISPLAY		
Display Source:	Process Variable (PV)	
Precision:	Auto	
ALARMS	ALARM 1	ALARM 2
Mode:	Low Trip	Hi Trip
Latching:	Off	Off
Trip point:	0.5 GPM	0.0 GPM
Dead Band:	0.0 GPM	0.0 GPM
Delay:	0 s	0 s
ANALOG OUTPUT		
Mode:	Current	
Fail mode:	Fail Low	
AO Range:	Zero: 4.0, Full: 20.0 mA	
Damping:	Disable (0.0 s)	

A

LT-EL-BL-EI (DRAWING DIRECTORY)	LT-EL-BL-EI-PPS-1070-92 (DRAWING NUMBER)	A (REV)
COMPUTER REPRODUCABLE	SCALE: N/A	SHEET 2 OF 8

LT-EL-BL-EI-PPS-1070-92

REV	DESCRIPTION	DATE	BY	CHECKED	APP
	SEE SHEET 1				

WATER FLOW INTERLOCK
CHANNEL 1 B CHAIN

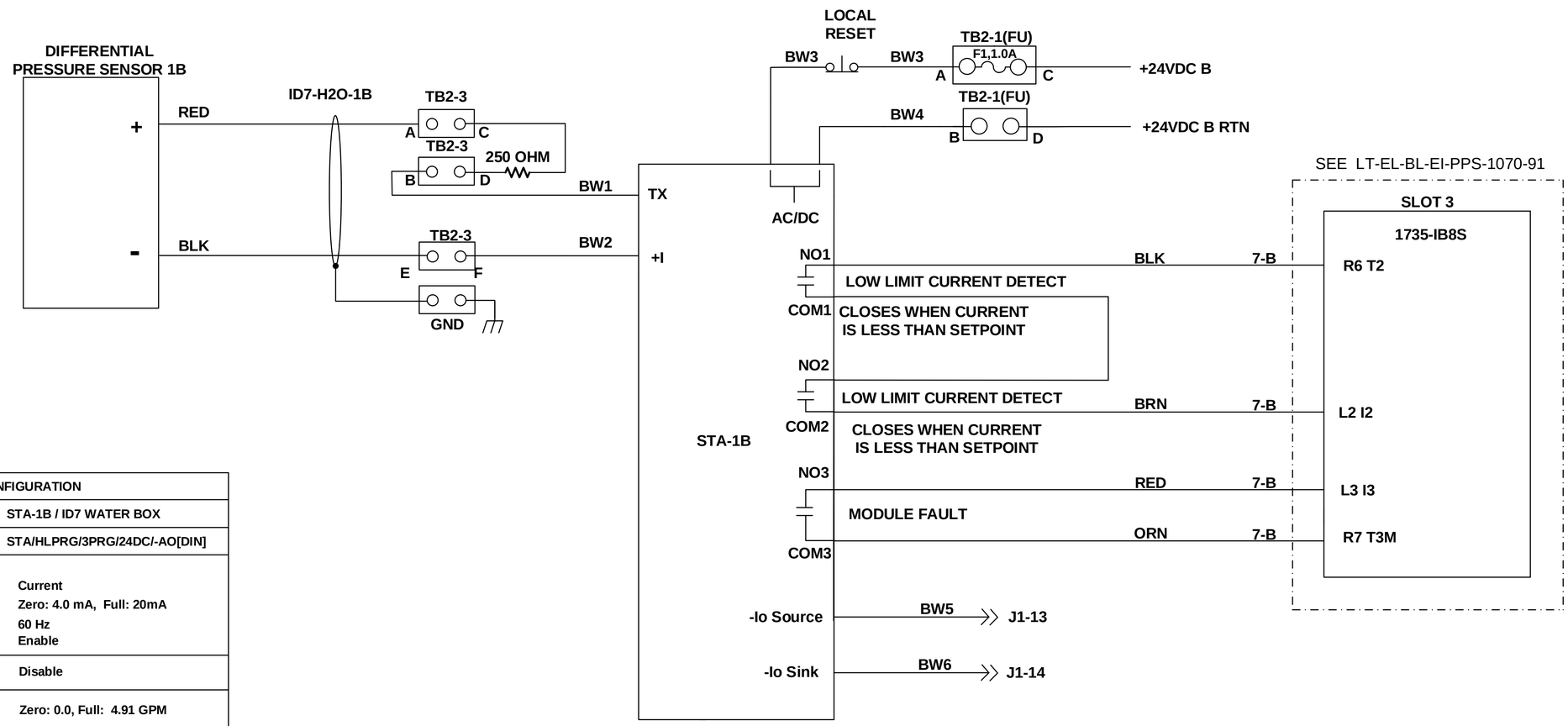

STA DEVICE PARAMETER CONFIGURATION		
DEVICE NAME / LOCATION:	STA-1B / ID7 WATER BOX	
MODEL :	STA/HLPRG/3PRG/24DC/-AO[DIN]	
INPUT		
Measurement Type:	Current	
Input Range:	Zero: 4.0 mA, Full: 20mA	
Filter Settings:	60 Hz	
Broken wire:	Enable	
TRIMMING	Disable	
SCALING	Zero: 0.0, Full: 4.91 GPM	
DISPLAY		
Display Source:	Process Variable (PV)	
Precision:	Auto	
ALARMS	ALARM 1	ALARM 2
Mode:	Low Trip	Hi Trip
Latching:	Off	Off
Trip point:	1.3 GPM	0.0 GPM
Dead Band:	0.0 GPM	0.0 GPM
Delay:	0 s	0 s
ANALOG OUTPUT		
Mode:	Current	
Fail mode:	Fail Low	
AO Range:	Zero: 4.0, Full: 20.0 mA	
Damping:	Disable (0.0 s)	

B

LT-EL-BL-EI (DRAWING DIRECTORY)	LT-EL-BL-EI-PPS-1070-92 (DRAWING NUMBER)	A (REV)
COMPUTER REPRODUCABLE	SCALE: N/A	SHEET 3 OF 8

LT-EL-BL-EI-PPS-1070-92

REV	DESCRIPTION	DATE	BY	CHECKED	APP
	SEE SHEET 1				

WATER FLOW INTERLOCK
CHANNEL 2 B CHAIN

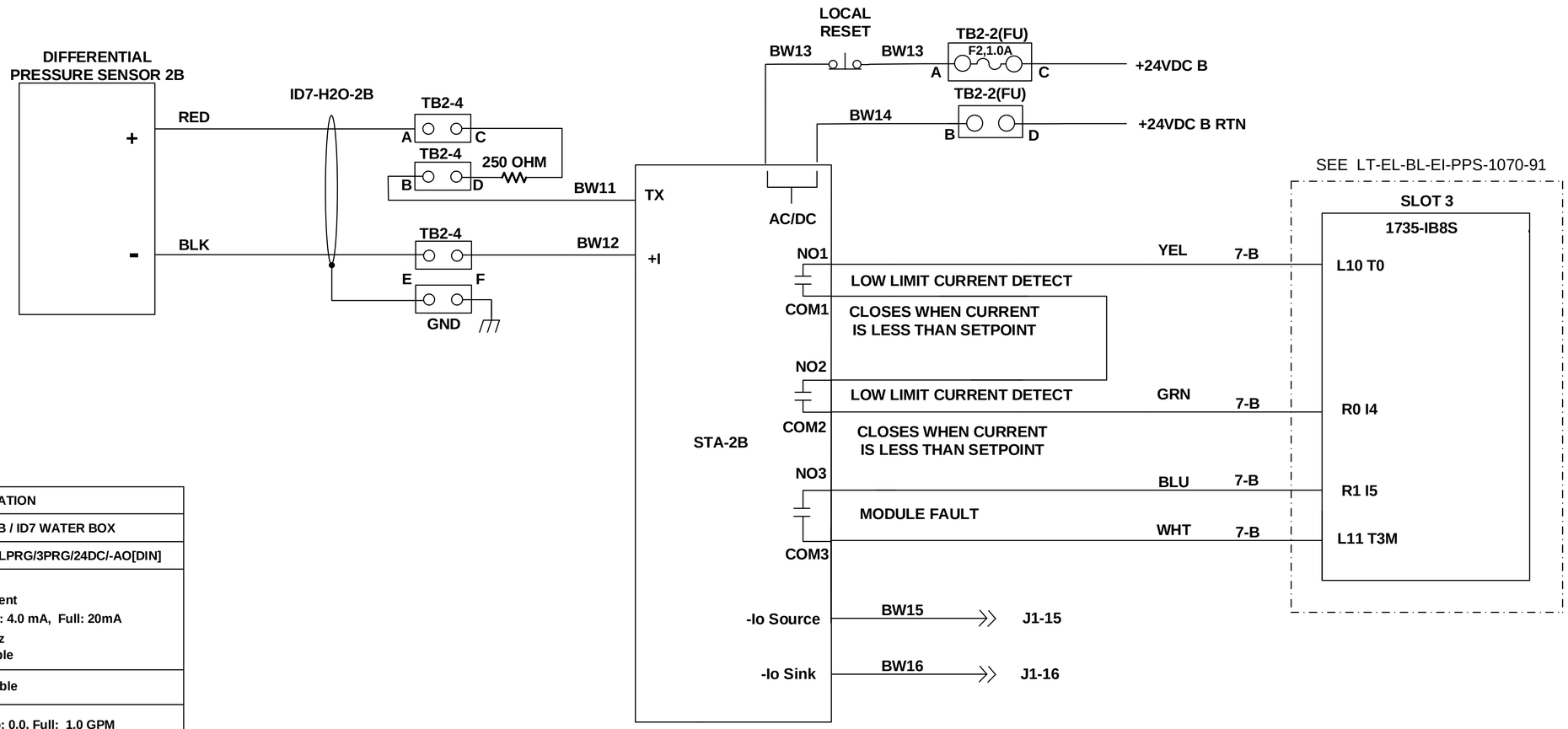

STA DEVICE PARAMETER CONFIGURATION		
DEVICE NAME / LOCATION:	STA-2B / ID7 WATER BOX	
MODEL :	STA/HLPRG/3PRG/24DC/-AO[DIN]	
INPUT		
Measurement Type:	Current	
Input Range:	Zero: 4.0 mA, Full: 20mA	
Filter Settings:	60 Hz	
Broken wire:	Enable	
TRIMMING	Disable	
SCALING	Zero: 0.0, Full: 1.0 GPM	
DISPLAY		
Display Source:	Process Variable (PV)	
Precision:	Auto	
ALARMS	ALARM 1	ALARM 2
Mode:	Low Trip	Hi Trip
Latching:	Off	Off
Trip point:	0.5 GPM	0.0 GPM
Dead Band:	0.0 GPM	0.0 GPM
Delay:	0 s	0 s
ANALOG OUTPUT		
Mode:	Current	
Fail mode:	Fail Low	
AO Range:	Zero: 4.0, Full: 20.0 mA	
Damping:	Disable (0.0 s)	

B

LT-EL-BL-EI-PPS-1070-92

LT-EL-BL-EI (DRAWING DIRECTORY)	LT-EL-BL-EI-PPS-1070-92 (DRAWING NUMBER)	A (REV)
COMPUTER REPRODUCABLE	SCALE: N/A	SHEET 4 OF 8

REV	DESCRIPTION	DATE	BY	CHECKED	APP
	SEE SHEET 1				

A CHAIN

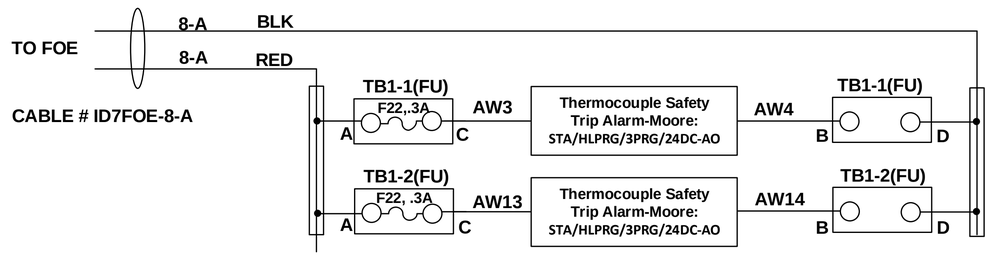

B CHAIN

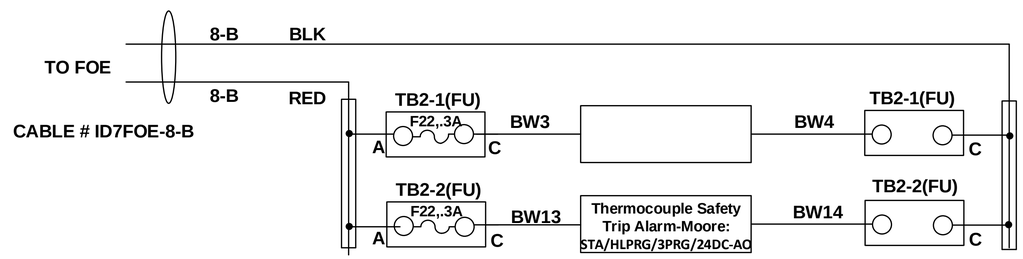

NOTES:

1. **TB1-1 TO TB1-2 ARE JUMPED TOGETHER.**
2. **TB2-1 TO TB2-2 ARE JUMPED TOGETHER.**

LT-EL-BL-EI (DRAWING DIRECTORY)	LT-EL-BL-EI-PPS-1070-92 (DRAWING NUMBER)	A (REV)
COMPUTER REPRODUCABLE	SCALE: N/A	SHEET 5 OF 8

LT-EL-BL-EI-PPS-1070-92

REV	DESCRIPTION	DATE	BY	CHECKED	APP
	SEE SHEET 1				

Row 1

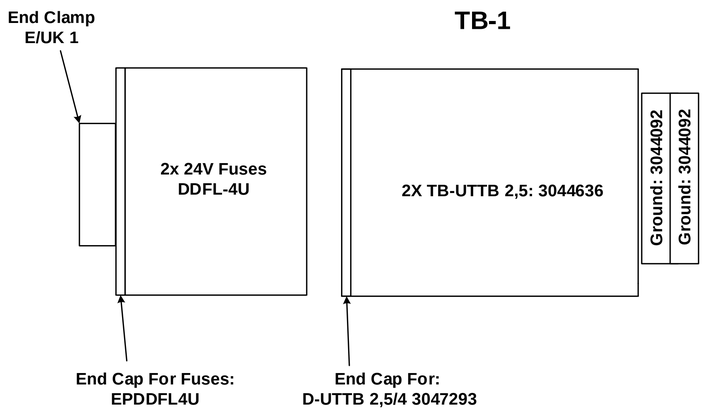

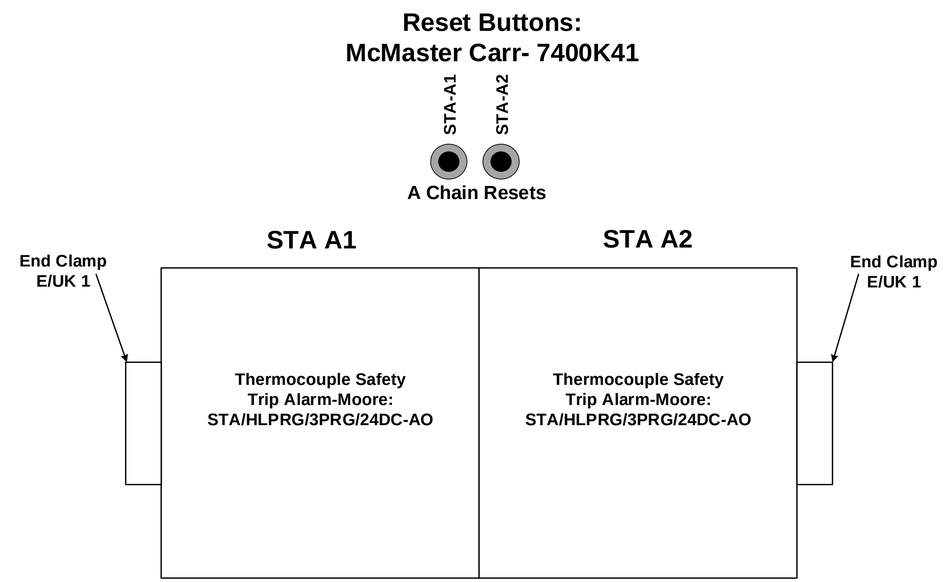

Row 2

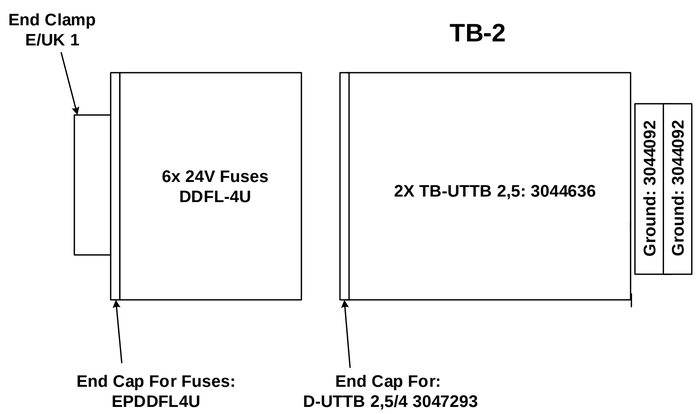

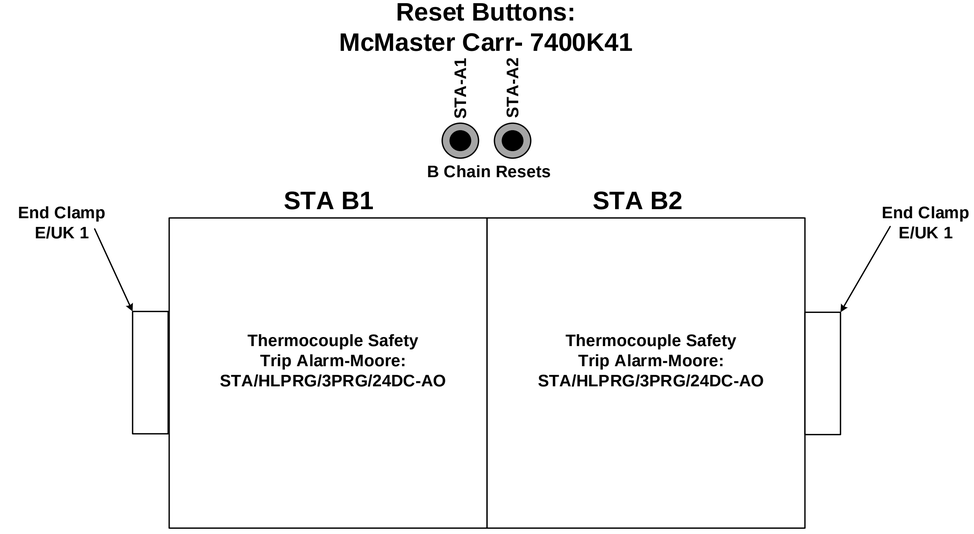

LT-EL-BL-EI-PPS-1070-92

LT-EL-BL-EI (DRAWING DIRECTORY)	LT-EL-BL-EI-PPS-1070-92 (DRAWING NUMBER)	A (REV)
COMPUTER REPRODUCABLE	SCALE: N/A	SHEET 6 OF 8

REV	DESCRIPTION	DATE	BY	CHECKED	APP
	SEE SHEET 1				

ROW 1:					
BUTTON	COMPONENT		DESCRIPTION	VENDOR	
1	7400K41		POWER DISTRIBUTION BLOCK A	MCMASTER	
2	7400K41		POWER DISTRIBUTION BLOCK A	MCMASTER	
SLOT	MODULE	SOCKET	DESCRIPTION	VENDOR	
	6ES7-151-1BA02-0AB0	N/A	IM 151	SIEMENS	
1	6ES7-138-4CA50-0AB0	6ES7-193-4CC20-0AA0	POWER MODULE PM-E	SIEMENS	
2	6ES7-138-4FA04-0AB0	6ES7-193-4CF40-0AA0	4/8 FDI 8 SAFE IN	SIEMENS	
3	6ES7-138-4FA04-0AB0	6ES7-193-4CF40-0AA0	4/8 FDI 8 SAFE IN	SIEMENS	
STA A1	STA/HLPRG/3PRG/24DC-AO [DIN]	N/A	THERMOCOUPLE SAFETY TRIP ALARM	MOORE	
STA A2	STA/HLPRG/3PRG/24DC-AO [DIN]	N/A	THERMOCOUPLE SAFETY TRIP ALARM	MOORE	
TB1	[6]	1>6 [8]	[3]	[1]	[2]
ROW 2:					
BUTTON	COMPONENT		DESCRIPTION	VENDOR	
1	7400K41		POWER DISTRIBUTION BLOCK B	MCMASTER	
2	7400K41		POWER DISTRIBUTION BLOCK B	MCMASTER	
SLOT	MODULE	SOCKET	DESCRIPTION	VENDOR	
1	1734-AENTR	N/A	24V DC EHTERNET ADAPTER	AB	
2	1734-IB8S	1734-TOP 3	AB INPUT F 8 SAFETY IN	AB	
3	1734-IB8S	1734-TOP 3	AB INPUT F 8 SAFETY IN	AB	
STA B1	STA/HLPRG/3PRG/24DC-AO [DIN]	N/A	THERMOCOUPLE SAFETY TRIP ALARM	MOORE	
STA B2	STA/HLPRG/3PRG/24DC-AO [DIN]	N/A	THERMOCOUPLE SAFETY TRIP ALARM	MOORE	
TB2	[6]	[8]	[3]	[1]	[2]

LT-EL-BL-EI-PPS-1070-92

LT-EL-BL-EI (DRAWING DIRECTORY)	LT-EL-BL-EI-PPS-1070-92 (DRAWING NUMBER)	A (REV)
COMPUTER REPRODUCABLE	SCALE: N/A	SHEET 7 OF 8

REV	DESCRIPTION	DATE	BY	CHECKED	APP
	SEE SHEET 1				

COLOR	PROD #	TYPE
[1]	3044636	Double-level terminal block - UTTB 2,5
[2]	3044092	GROUND
[3]	3047293	End cover - D-UTTB 2,5/4
[4]	3047303	Spacer plate - DP-UTTB 2,5/4
[5]	1201413	End clamp - E/UK 1
[6]	EPDDFL4U	End Plate; Term Blk; DIN Rail; Gray;
[7]	3044542	DIN Rail Terminal Blocks UT 2 5/4-QUATTRO
[8]	DDFL-4U	24V FUSES
[9]	3044076	Feed-through terminal block - UT 2,5
[10]	3047028	End cover - D-UT 2,5/10
[11]	3047170	End cover - D-UT 2,5/4-QUATTRO
[12]	3044102	Feed-through terminal block - UT 4
[13]	2775016	Feed-through terminal block - UDK 4
[14]	KN-TL-14	KONNECT IT 3 CIRCUIT TERMINAL BLOCK
[15]	KN-EC-TL	3 CIRCUIT TERMINAL BLOCK COVER
[16]	CDL4U(E)DD2	99321 ALTECH DIODE TERMINAL BLOCK
[17]	EPCDL4U	ALTECH DIODE TB END COVER
[18]	3044636	Diode TB - UTTB 2,5 O-UL/UR-UL

[1]
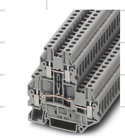

[7]

[13]

[2]

[8]

[14]

[3]

[9]

[15]

[4]

[10]

[16]
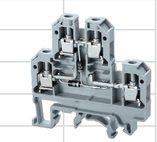

[5]

[11]

[17]

[6]

[12]

[18]
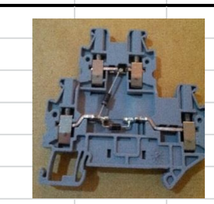

Paired part numbers are color coordinated.

LT-EL-BL-EI	LT-EL-BL-EI-PPS-1070-92	A
DRAWING DIRECTORY	DRAWING NUMBER	REV
COMPUTER REPRODUCABLE	SCALE: N/A	SHEET 8 OF 8

LT-EL-BL-EI-PPS-1070-92

REV	DESCRIPTION	DATE	BY	CHECKED	APP
A	INITIAL RELEASE	9/08/2014	SEJ	JM	SB
B	REVISED PER ECN LT-ECN-016-1604	9/08/2016	SEJ	JM	SB

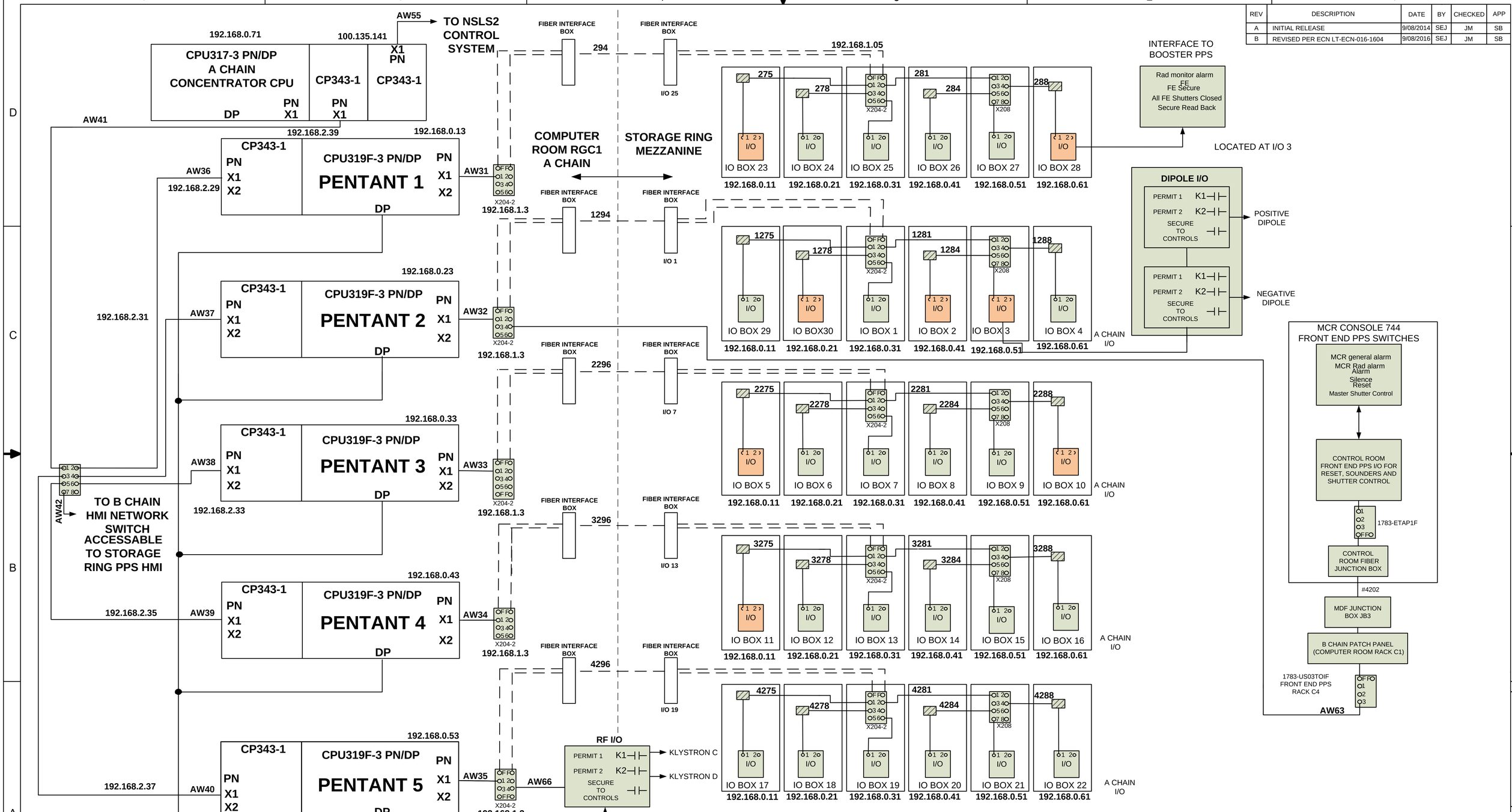

LT-EL-BL-EI-PPS-0101-90

BROOKHAVEN NATIONAL LABORATORY

BROOKHAVEN NATIONAL LABORATORY
BROOKHAVEN SCIENCE ASSOCIATES
UPTON, NEW YORK 11973
Exploring Life's Mysteries, Protecting Its Future

NSLSII NATIONAL SYNCHROTRON LIGHT SOURCE II

UNLESS OTHERWISE SPECIFIED INTEGER TOLERANCES ± .06
DECIMAL TOLERANCES .X ± .030 .XX ± .015 .XXX ± .010
ANGULAR TOLERANCE ± 0.5°
UNSPECIFIED RADII .02 MAX
125 BREAK SHARP CORNERS AND EDGES
FINISH MAX .03 MIN .005

UNLESS OTHERWISE SPECIFIED DIMENSIONS ARE IN INCHES DIMENSIONS IN [ ] ARE MILLIMETERS EQUIV. FOR REF. ONLY
INTERPRET DRAWING AS PER ANSI Y14.5 OR Y32.2
ESH&Q RISK LEVEL A-1
OUTSTANDING ECN'S

		DATE
DRWN BY	S. Jarzabkowski	9/08/2014
CHK BY	J. Malley	9/08/2014
ENG APP	S. Buda	9/08/2014
SUPV APP	G. Ganetis	9/10/2014
QA APP	E. Cheswick	9/08/2014
ESH APP	R. Lee	9/10/2014

WIRING DIAGRAM, FRONT END PPS CPU RACK A CHAIN

LT-EL-BL-EI (DRAWING DIRECTORY) | LT-EL-BL-EI-PPS-0101-90 (DRAWING NUMBER) | B (REV.)

COMPUTER REPRODUCIBLE | SCALE: N/A | SHEET 1 OF 5

JOB NUMBER | USED ON DWG. NO.

REV	DESCRIPTION	DATE	BY	CHECKED	APP
	SEE SHEET 1				

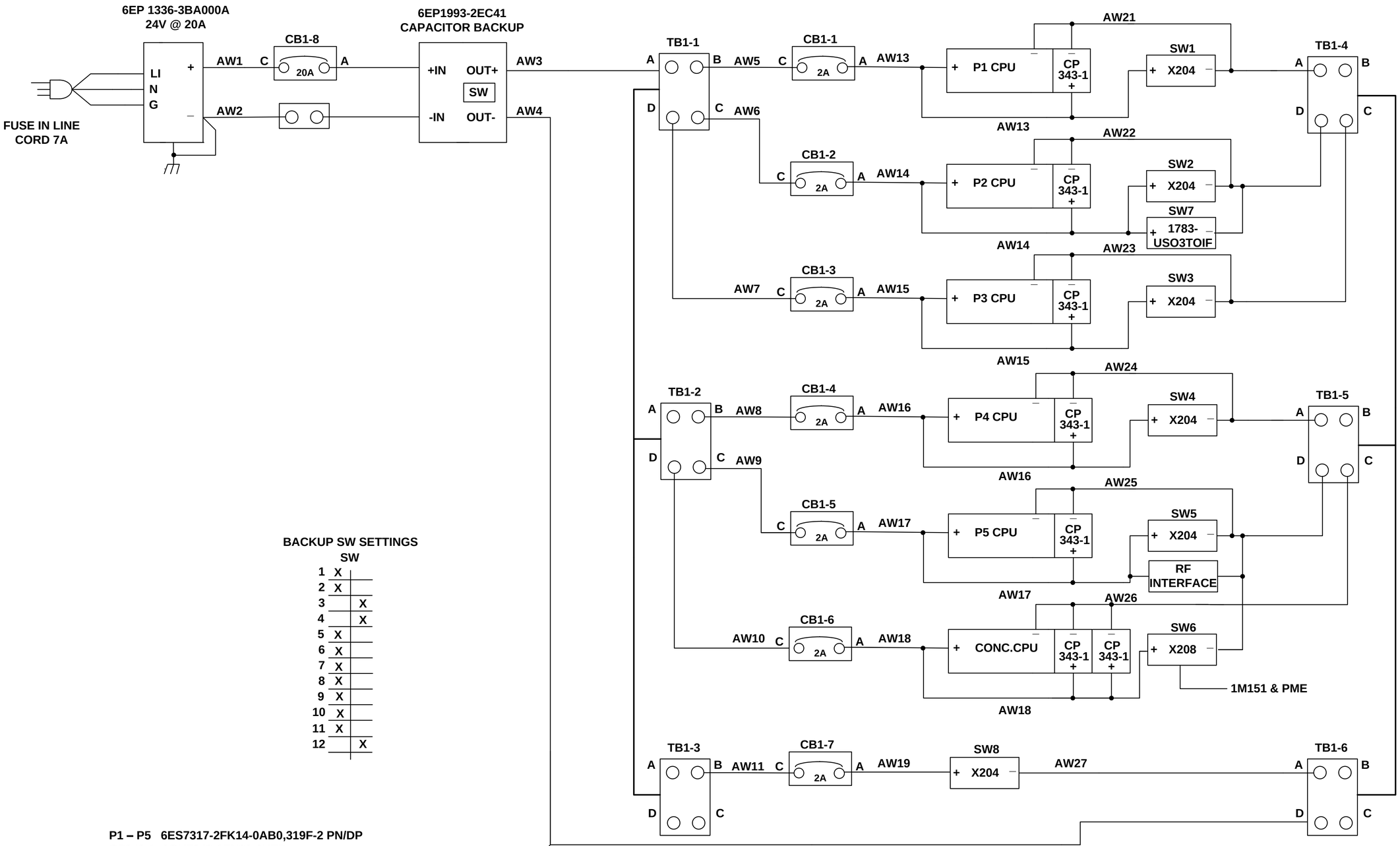

BACKUP SW SETTINGS

	SW	
1	X	
2	X	
3		X
4		X
5	X	
6	X	
7	X	
8	X	
9	X	
10	X	
11	X	
12		X

P1 – P5 6ES7317-2FK14-0AB0,319F-2 PN/DP
CP343-1 6GK7343-1EX30-0XED
SW2 6GK52061-1BB10-2AA3,X206-1
SW1,5 & 8 6GK55204-2BB10-2AA3,X204-2
SW6 6GK5208-OBA10-2AA3,X208
SW7 1783-USO3TOIF

LT-EL-BL-EI-PPS-0101-90

LT-EL-BL-EI (DRAWING DIRECTORY)	LT-EL-BL-EI-PPS-0101-90 (DRAWING NUMBER)	B (REV)
COMPUTER REPRODUCIBLE	SCALE: N/A	SHEET 2 OF 5

REV	DESCRIPTION	BY	DATE	CHK	APP
	SEE SHEET 1				

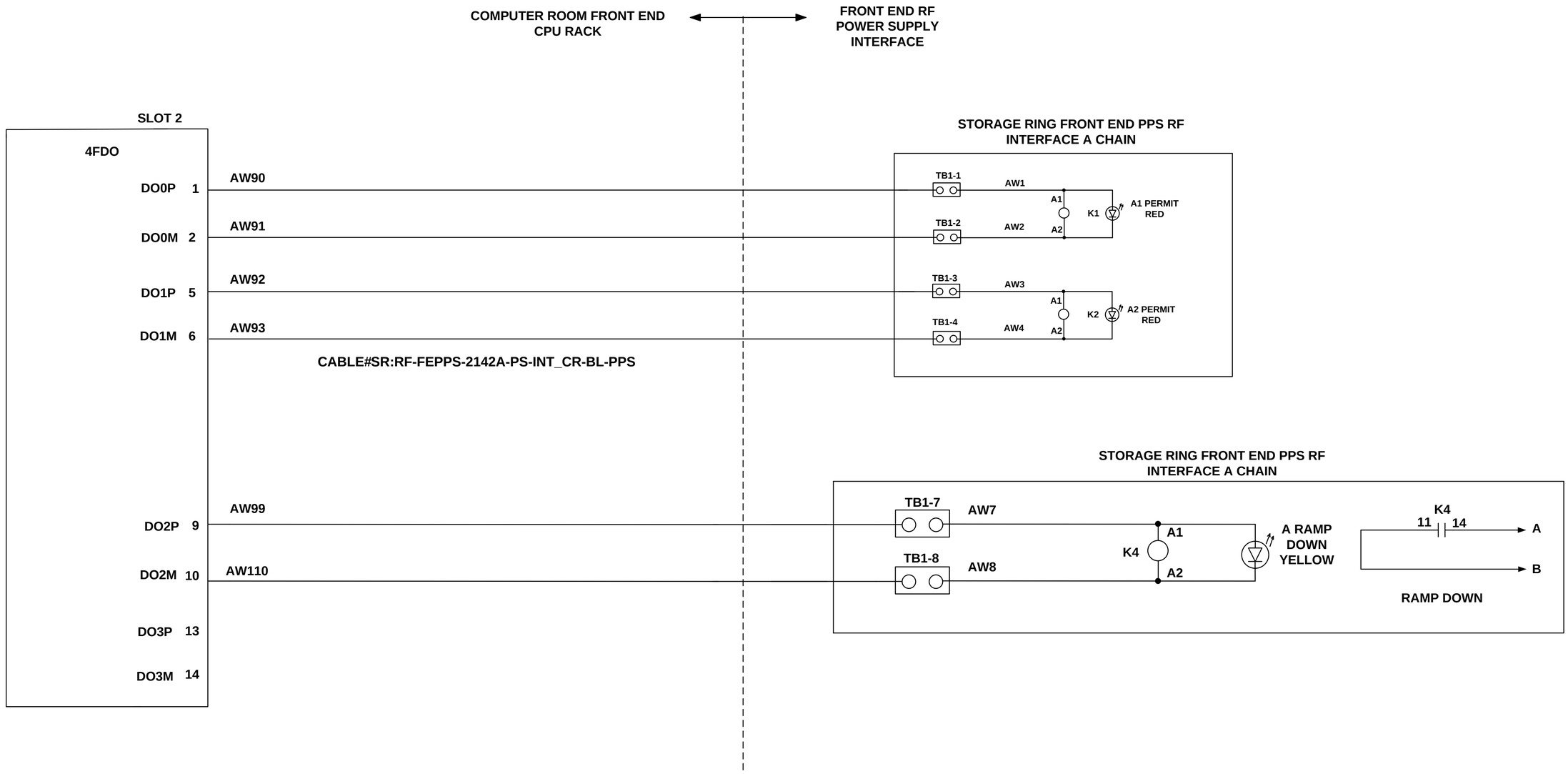

A

LT-EL-BL-EI	LT-EL-BL-EI-PPS-0101-90	B
DRAWING DIRECTORY	DRAWING NUMBER	REV

COMPUTER REPRODUCIBLE | SCALE: N/A | SHEET 3 OF 5

LT-EL-BL-EI-PPS-0101-90

REV	DESCRIPTION	BY	DATE	CHK	APP
	SEE SHEET 1				

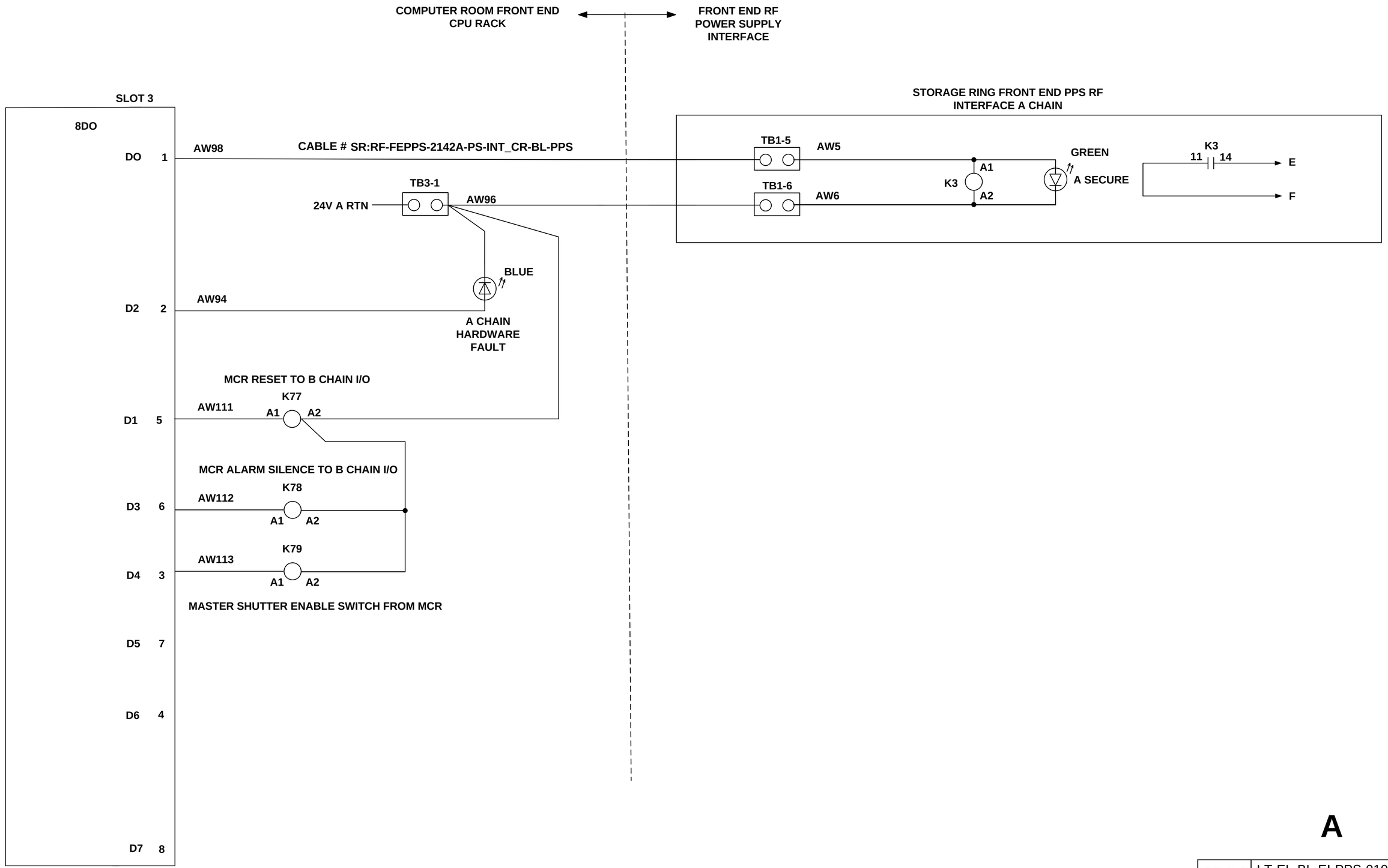

A

LT-EL-BL-EI	LT-EL-BL-EI-PPS-0101-90	B
DRAWING DIRECTORY	DRAWING NUMBER	REV

COMPUTER REPRODUCIBLE | SCALE: N/A | SHEET 4 OF 5

LT-EL-BL-EI-PPS-0101-90

REV	DESCRIPTION	BY	DATE	CHK	APP
	SEE SHEET 1				

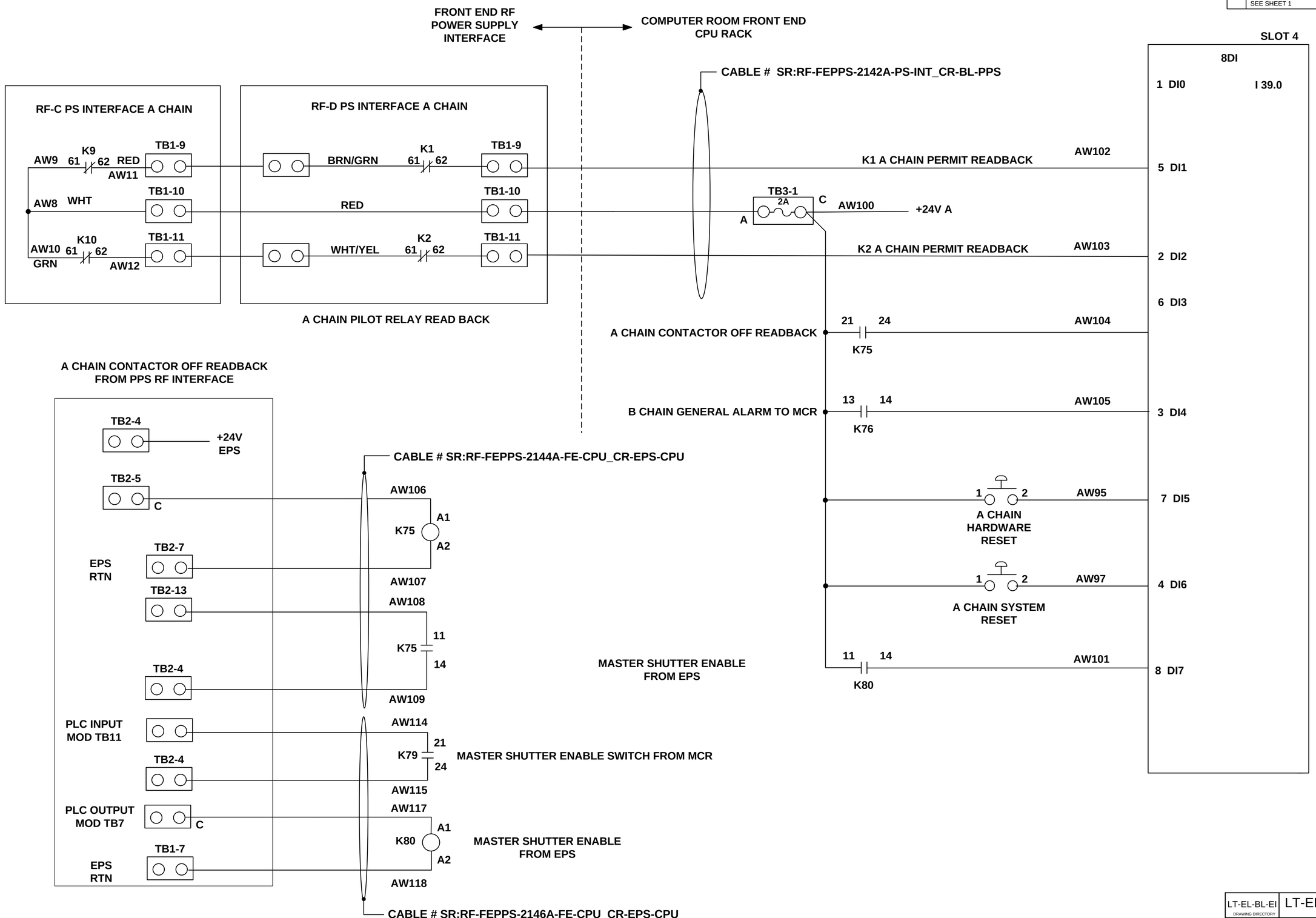

A

LT-EL-BL-EI	LT-EL-BL-EI-PPS-0101-90	B
DRAWING DIRECTORY	DRAWING NUMBER	REV

COMPUTER REPRODUCIBLE | SCALE: N/A | SHEET 5 OF 5

LT-EL-BL-EI-PPS-0101-90

REV	DESCRIPTION	DATE	BY	CHECKED	APP
A	INITIAL RELEASE	9/08/2014	SEJ	JM	SB
B	REVISED PER ECN LT-ECN-016-1605	9/08/2016	SEJ	JM	SB

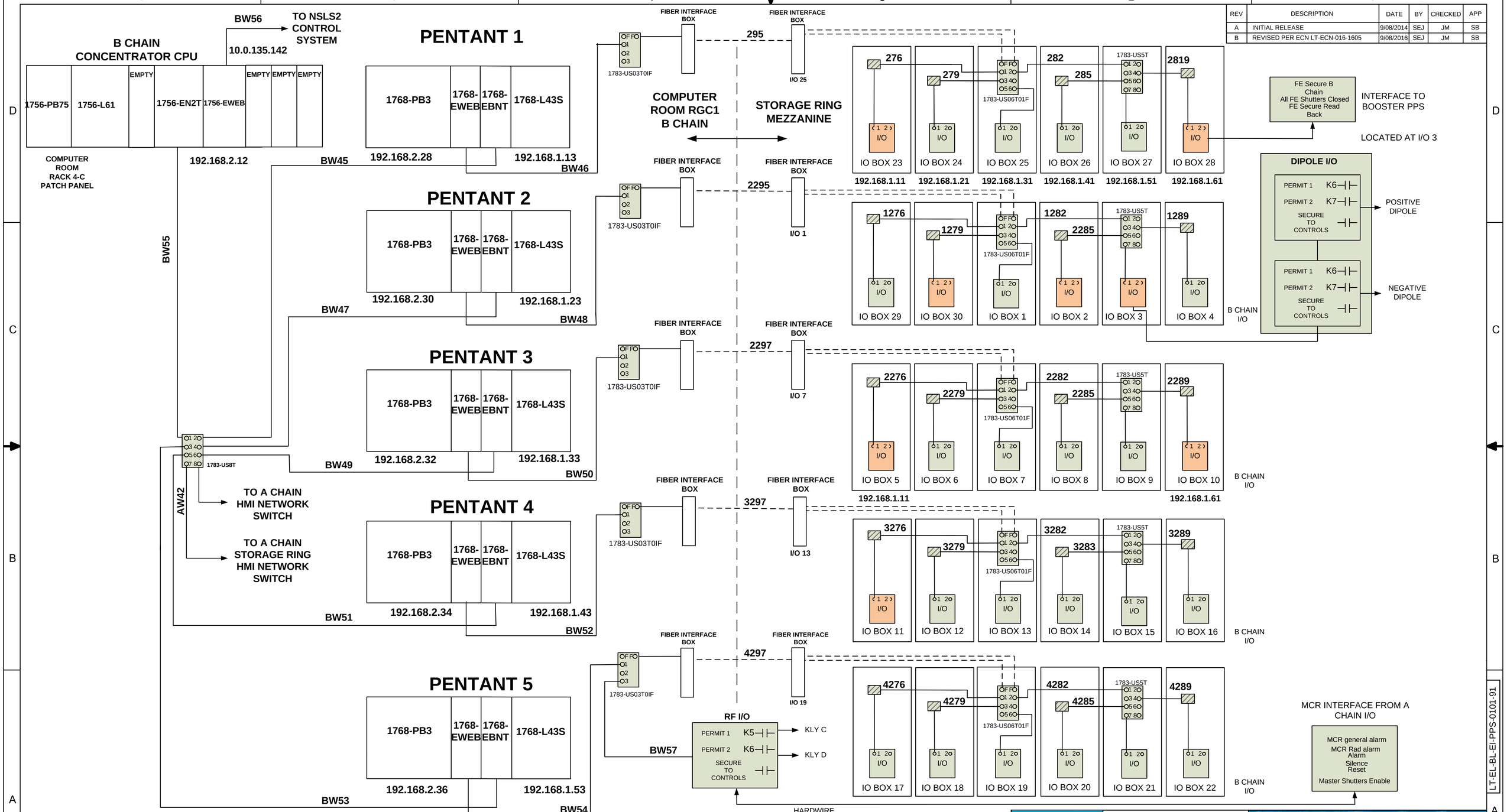

BROOKHAVEN NATIONAL LABORATORY

BROOKHAVEN NATIONAL LABORATORY
BROOKHAVEN SCIENCE ASSOCIATES
UPTON, NEW YORK 11973
Exploring Life's Mysteries, Protecting its Future

NSLS II NATIONAL SYNCHROTRON LIGHT SOURCE II

UNLESS OTHERWISE SPECIFIED
INTEGER TOLERANCES ± .06
DECIMAL TOLERANCES
.X ± .030
.XX ± .015
.XXX ± .010
ANGULAR TOLERANCE ± 0.5°
UNSPECIFIED RADII .02 MAX
125 BREAK SHARP CORNERS AND EDGES
FINISH MAX .03 MIN .005

UNLESS OTHERWISE SPECIFIED DIMENSIONS ARE IN INCHES DIMENSIONS IN [ ] ARE MILLIMETERS EQUIV. FOR REF. ONLY
INTERPRET DRAWING AS PER ANSI Y14.5 OR Y32.2

ESH&Q RISK LEVEL A-1
OUTSTANDING ECN'S

		DATE
DRWN BY	S. Jarzabkowski	9/08/2014
CHK BY	J. Malley	9/08/2014
ENG APP	S. Buda	9/08/2014
SUPV APP	G. Ganetis	9/10/2014
QA APP	E. Cheswick	9/08/2014
ESH APP	R. Lee	9/10/2014

WIRING DIAGRAM, FRONT END PPS CPU RACK B CHAIN

LT-EL-BL-EI (DRAWING DIRECTORY) | LT-EL-BL-EI-PPS-0101-91 (DRAWING NUMBER) | B (REV)

COMPUTER REPRODUCIBLE | SCALE: N/A | SHEET 1 OF 5

JOB NUMBER | USED ON DWG. NO.

LT-EL-BL-EI-PPS-0101-91

REV	DESCRIPTION	DATE	BY	CHECKED	APP
	SEE SHEET 1				

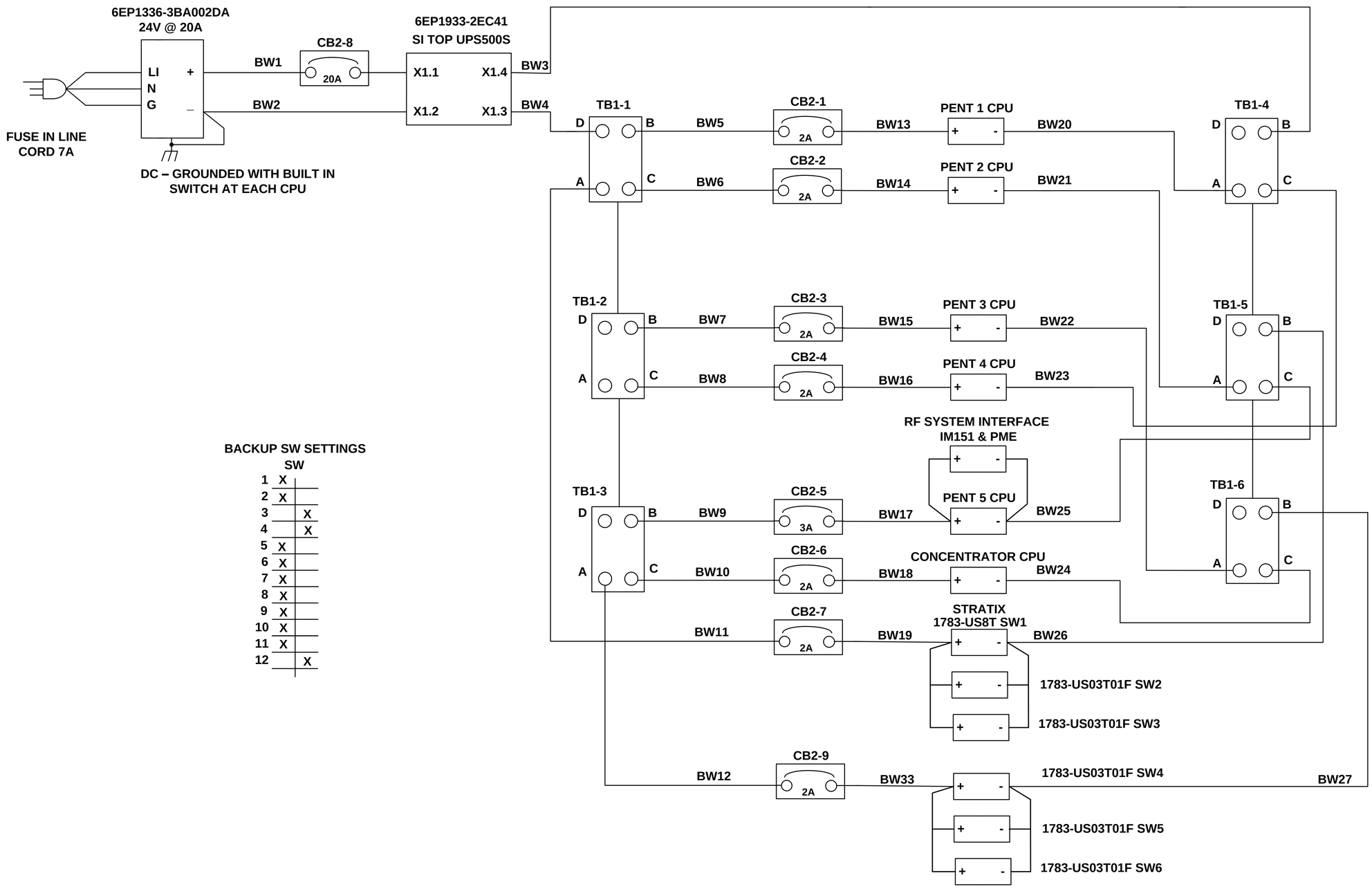

BACKUP SW SETTINGS

	SW	
1	X	
2	X	
3		X
4		X
5	X	
6	X	
7	X	
8	X	
9	X	
10	X	
11	X	
12		X

LT-EL-BL-EI-PPS-0101-91

LT-EL-BL-EI	LT-EL-BL-EI-PPS-0101-91	B
DRAWING DIRECTORY	DRAWING NUMBER	REV
COMPUTER REPRODUCIBLE	SCALE: N/A	SHEET 2 OF 5

REV	DESCRIPTION	BY	DATE	CHK	APP
	SEE SHEET 1				

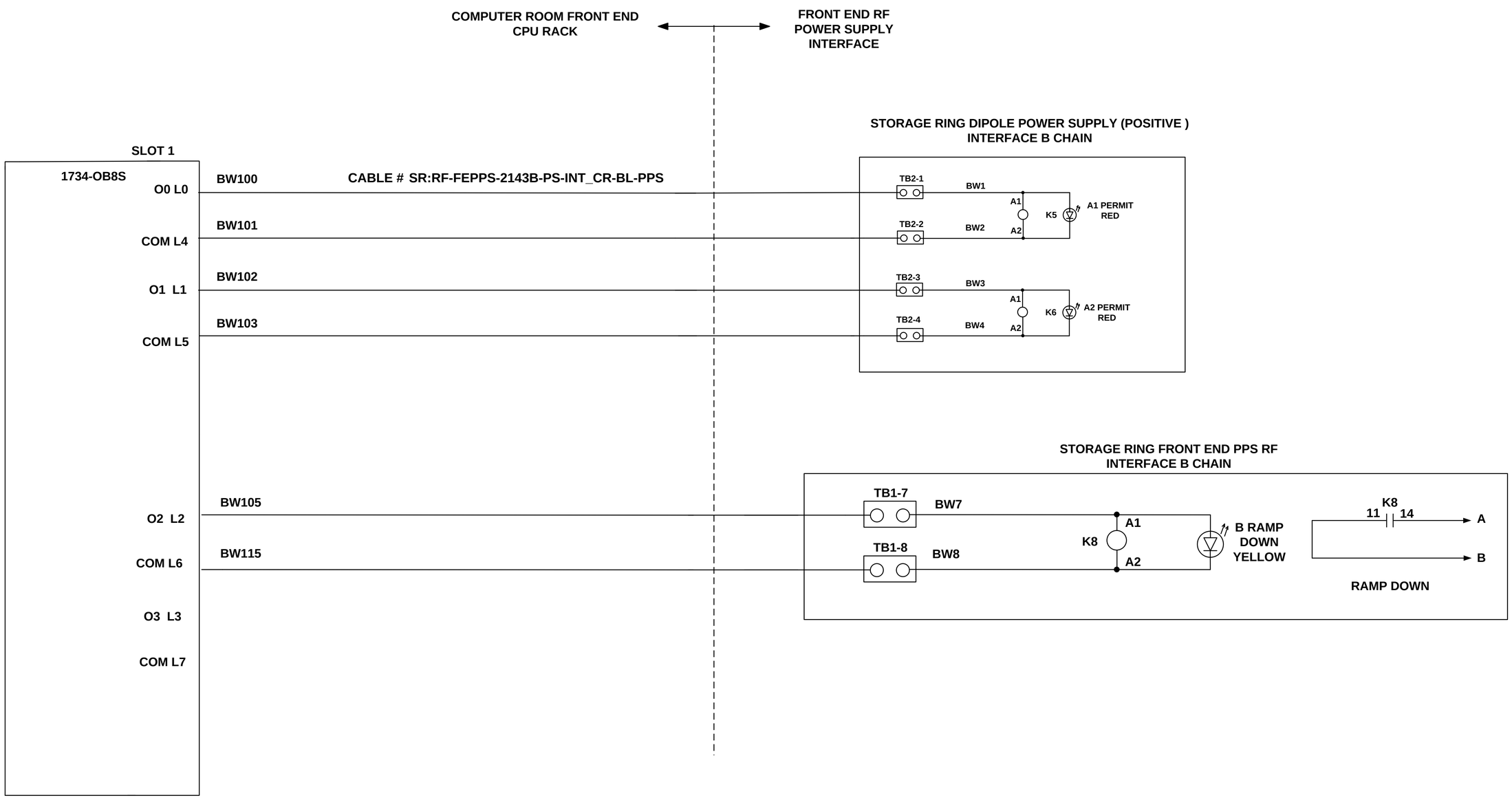

B

LT-EL-BL-EI	LT-EL-BL-EI-PPS-0101-91	B
DRAWING DIRECTORY	DRAWING NUMBER	REV

COMPUTER REPRODUCIBLE | SCALE: N/A | SHEET 3 OF 5

LT-EL-BL-EI-PPS-0101-91

REV	DESCRIPTION	BY	DATE	CHK	APP
	SEE SHEET 1				

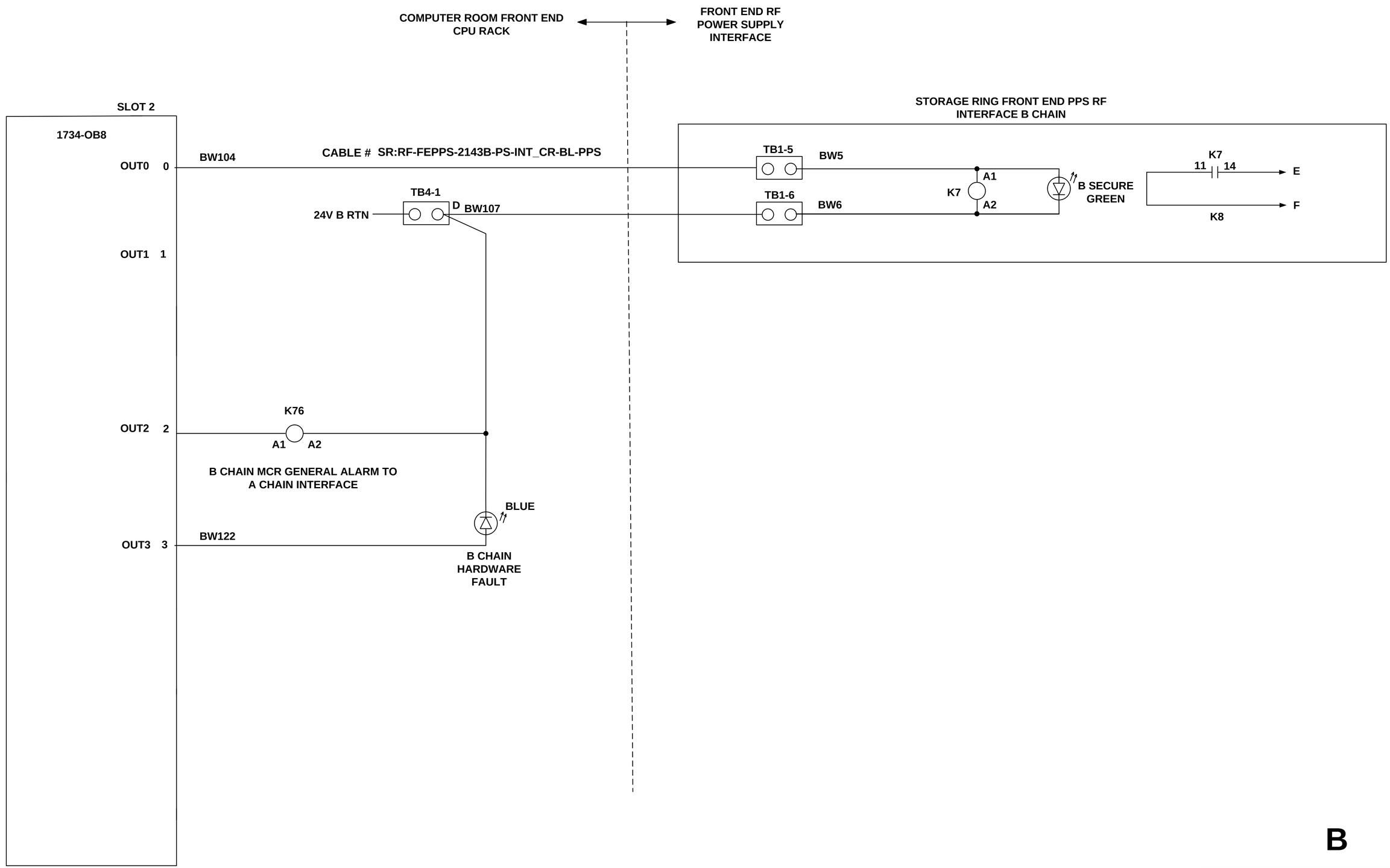

B

LT-EL-BL-EI	LT-EL-BL-EI-PPS-0101-91	B
DRAWING DIRECTORY	DRAWING NUMBER	REV.

COMPUTER REPRODUCIBLE | SCALE: N/A | SHEET 4 OF 5

LT-EL-BL-EI-PPS-0101-91

REV	DESCRIPTION	BY	DATE	CHK	APP
	SEE SHEET 1				

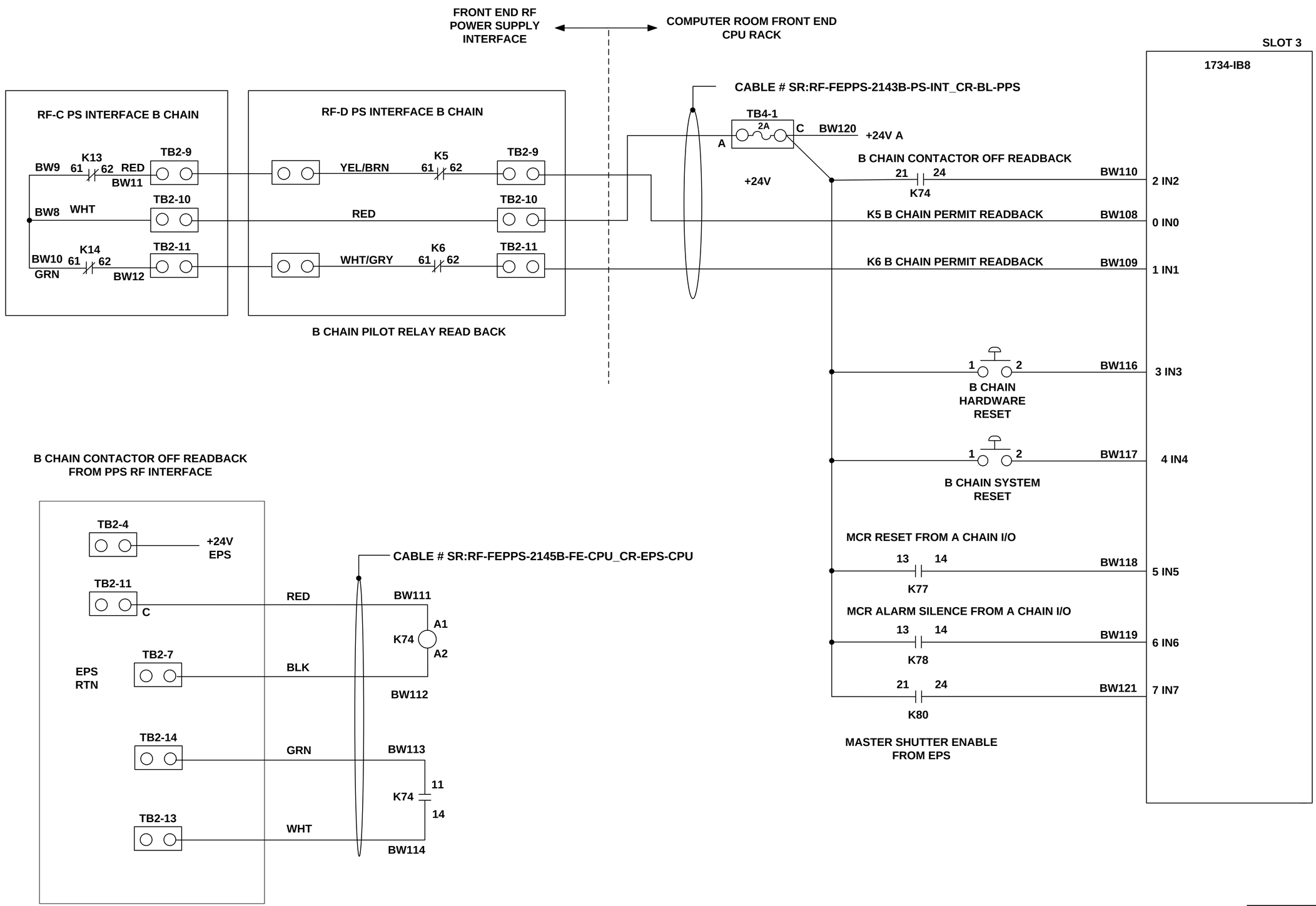

B

LT-EL-BL-EI (DRAWING DIRECTORY)	LT-EL-BL-EI-PPS-0101-91 (DRAWING NUMBER)	B (REV)
COMPUTER REPRODUCIBLE	SCALE: N/A	SHEET 5 OF 5

LT-EL-BL-EI-PPS-0101-91

REV	DESCRIPTION	DATE	BY	CHECKED	APP
A	INITIAL RELEASE	01/27/2014	SEJ	JM	SB
B	REVISED PER ECN-014-758	03/07/2014	CG	JM	SB
C	REVISED PER ECN-014-824	07/07/2014	SEJ	JM	SB
D	REVISED PER ECN-015-1181	04/27/2015	CG	JM	SB
E	REVISED PER ECN-017-1795	07/11/2017	SEJ	JM	SB

TO :
LT-ECN-017-1795
PAGE OF

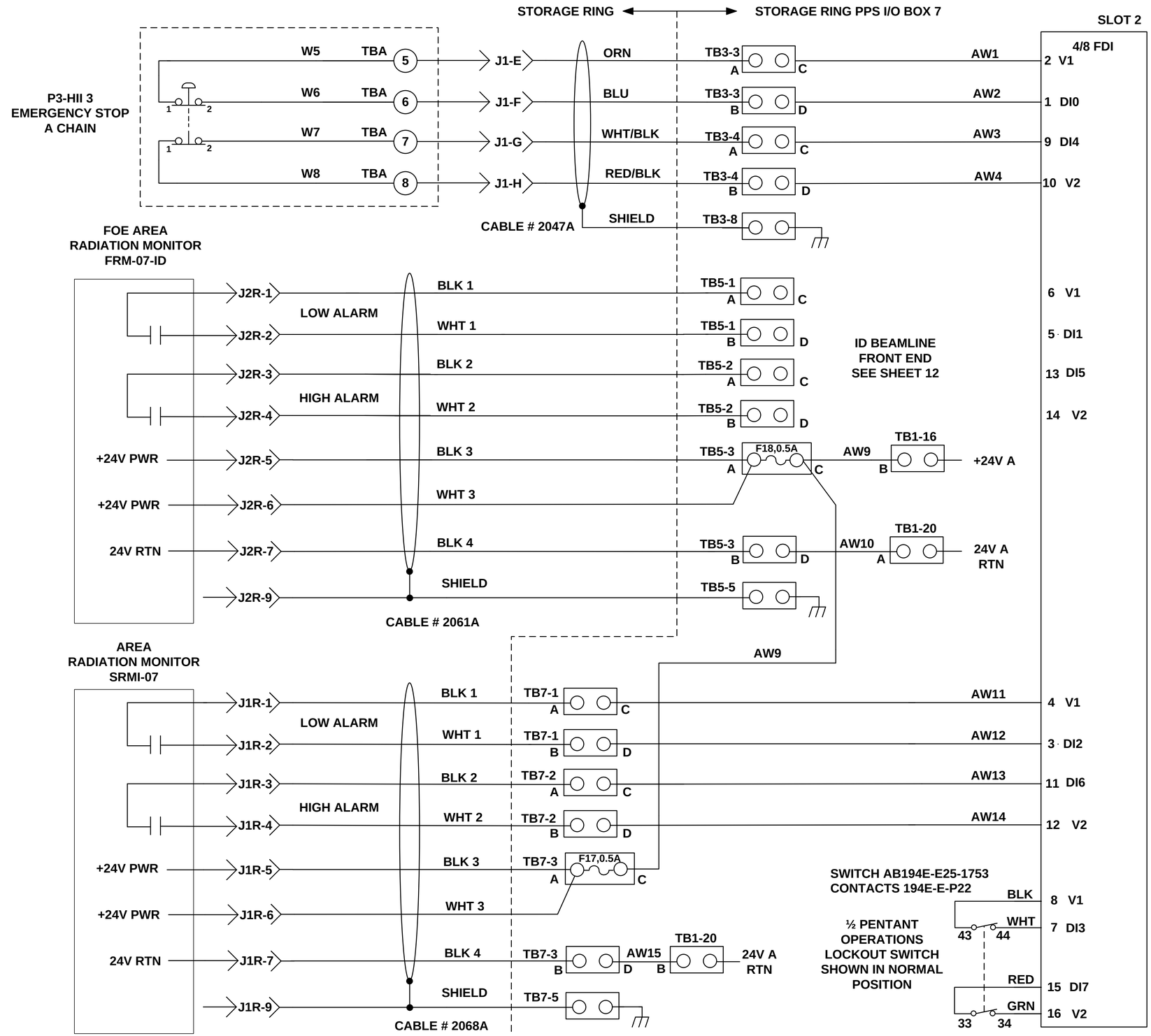

ID BEAMLINE INSTALLED [X]
BM BEAMLINE INSTALLED [X]

COMMON GROUP

A

SEE SEPARATE WIRE RUNNING LIST – RL LT-EL-SR-EI-PPS-0207-90
SEE SEPARATE PARTS LIST – PL LT-EL-SR-EI-PPS-0207-90

LT-EL-SR-EI-PPS-0207-90

BROOKHAVEN NATIONAL LABORATORY

BROOKHAVEN NATIONAL LABORATORY
BROOKHAVEN SCIENCE ASSOCIATES
UPTON, NEW YORK 11973
Exploring Life's Mysteries, Protecting its Future

NSLS II NATIONAL SYNCHROTRON LIGHT SOURCE II

UNLESS OTHERWISE SPECIFIED
INTEGER TOLERANCES ± .06
DECIMAL TOLERANCES
.X ± .030
.XX ± .015
.XXX ± .010
ANGULAR TOLERANCE ± 0.5°
UNSPECIFIED RADII .02 MAX
125 BREAK SHARP CORNERS AND EDGES
FINISH MAX .03 MIN .005

UNLESS OTHERWISE SPECIFIED DIMENSIONS ARE IN INCHES DIMENSIONS IN [ ] ARE MILLIMETERS EQUIV. FOR REF. ONLY
INTERPRET DRAWING AS PER ANSI Y14.5 OR Y32.2

ESH&Q RISK LEVEL A-1

		DATE	OUTSTANDING ECN'S
DRWN BY	S. JARZABKOWSKI	01/27/2014	
CHK BY	J.MALLEY	01/30/2014	
ENG APP	S. BUDA	01/30/2014	
SUPV APP	G. GANETIS	01/31/2014	
QA APP	E.CHESWICK	01/31/2014	
ESH APP	R. LEE	01/31/2014	

JOB NUMBER | USED ON DWG. NO.

WIRING DIAGRAM,
STORAGE RING PPS I/O BOX 7
TYPE 1 A CHAIN & B CHAIN

LT-EL-SR-EI (DRAWING DIRECTORY) | LT-EL-SR-EI-PPS-0207-90 (DRAWING NUMBER) | E (REV)

WBS # 1.03.06.01.03 | SCALE: N/A | SHEET 1 OF 61

REV	DESCRIPTION	DATE	BY	CHECKED	APP
	SEE SHEET 1				

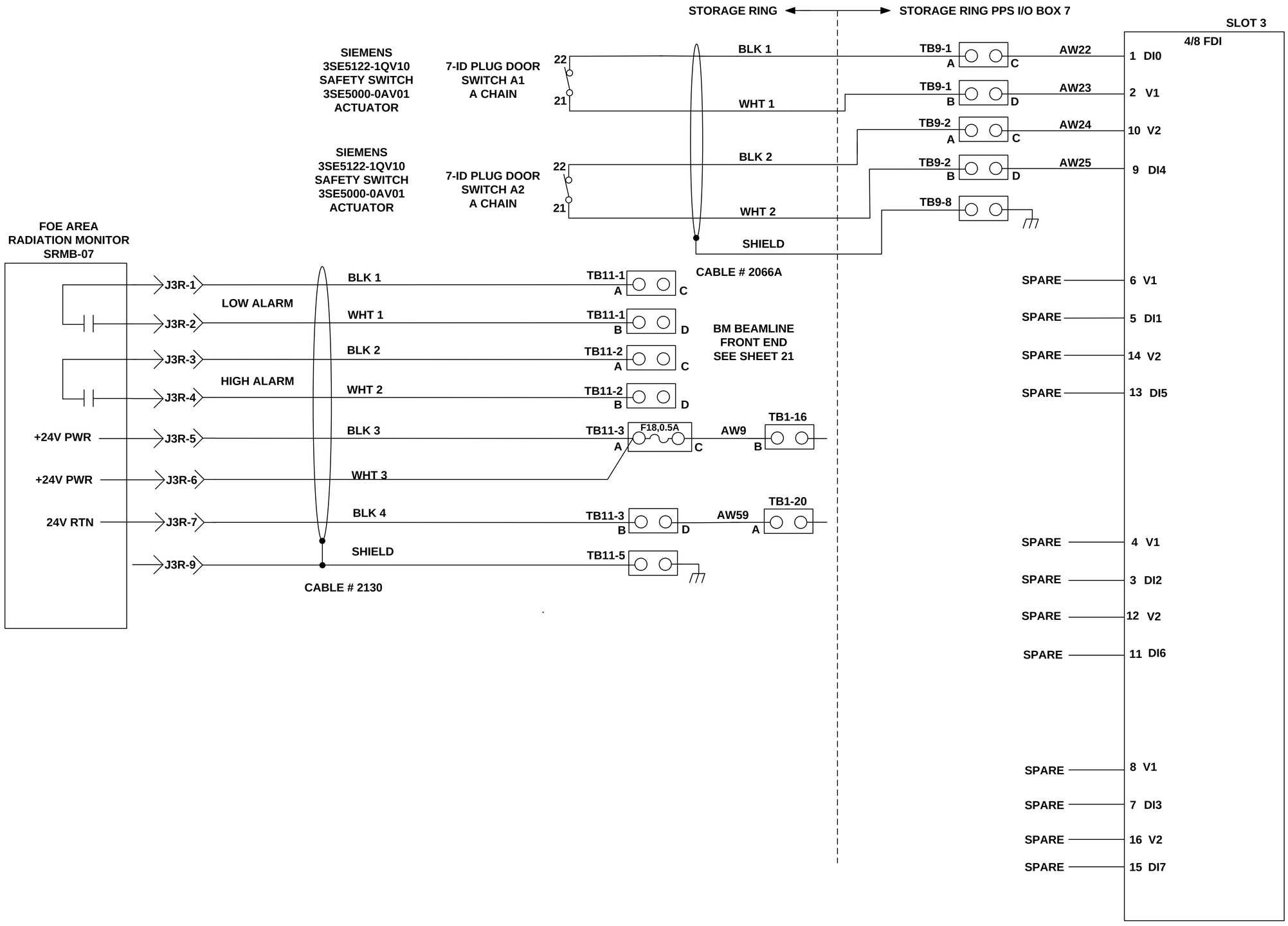

TO :
LT-ECN-017-1795
PAGE OF

COMMON GROUP

A

LT-EL-SR-EI-PPS-0207-90

LT-EL-SR-EI (DRAWING DIRECTORY)	LT-EL-SR-EI-PPS-0207-90 (DRAWING NUMBER)	E (REV)
COMPUTER REPRODUCABLE	SCALE: N/A	SHEET 2 OF 61

REV	DESCRIPTION	DATE	BY	CHECKED	APP
	SEE SHEET 1				

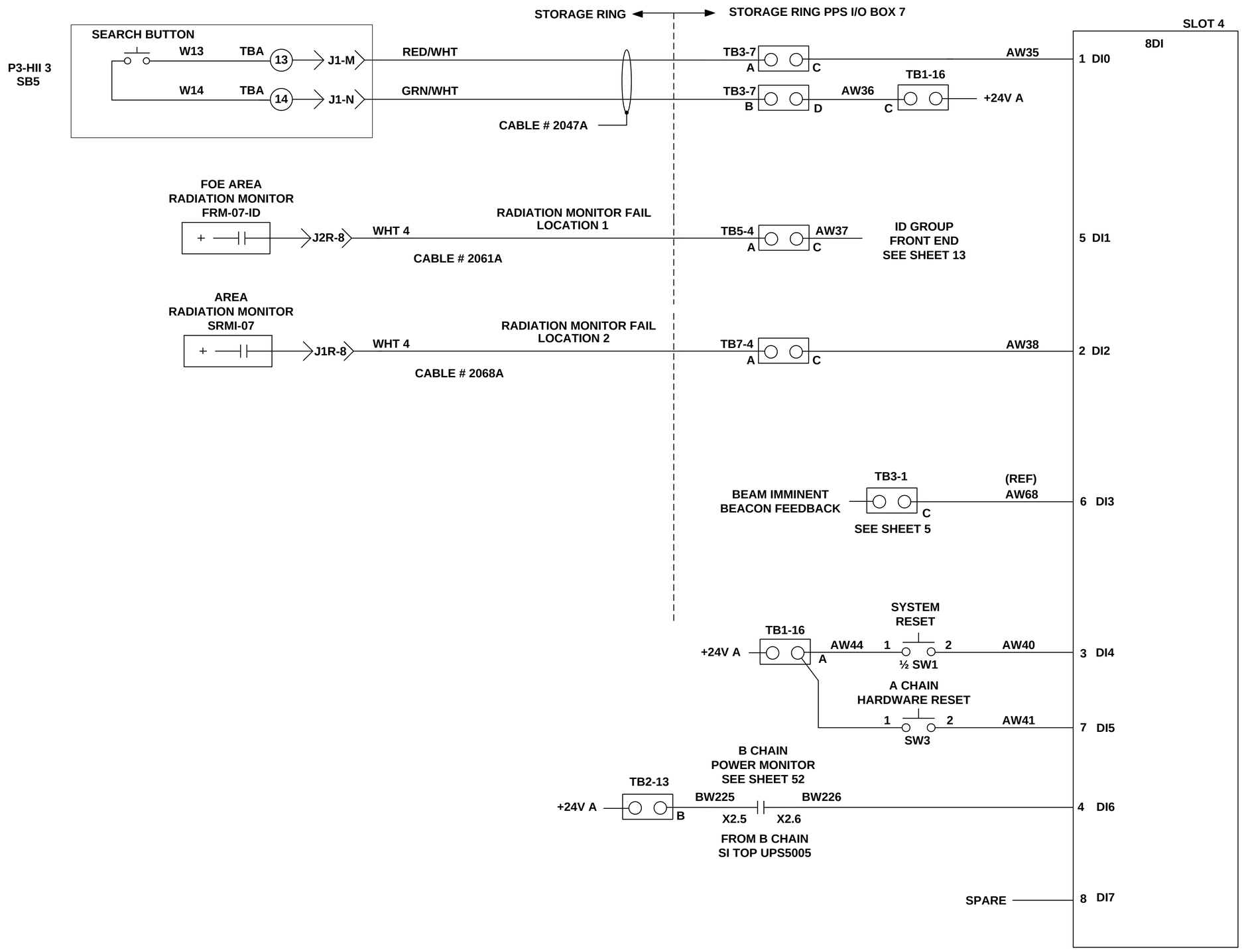

TO :
LT-ECN-017-1795
PAGE OF

COMMON GROUP

A

LT-EL-SR-EI-PPS-0207-90

LT-EL-SR-EI (DRAWING DIRECTORY)	LT-EL-SR-EI-PPS-0207-90 (DRAWING NUMBER)	E (REV)
COMPUTER REPRODUCABLE	SCALE: N/A	SHEET 3 OF 61

REV	DESCRIPTION	DATE	BY	CHECKED	APP
	SEE SHEET 1				

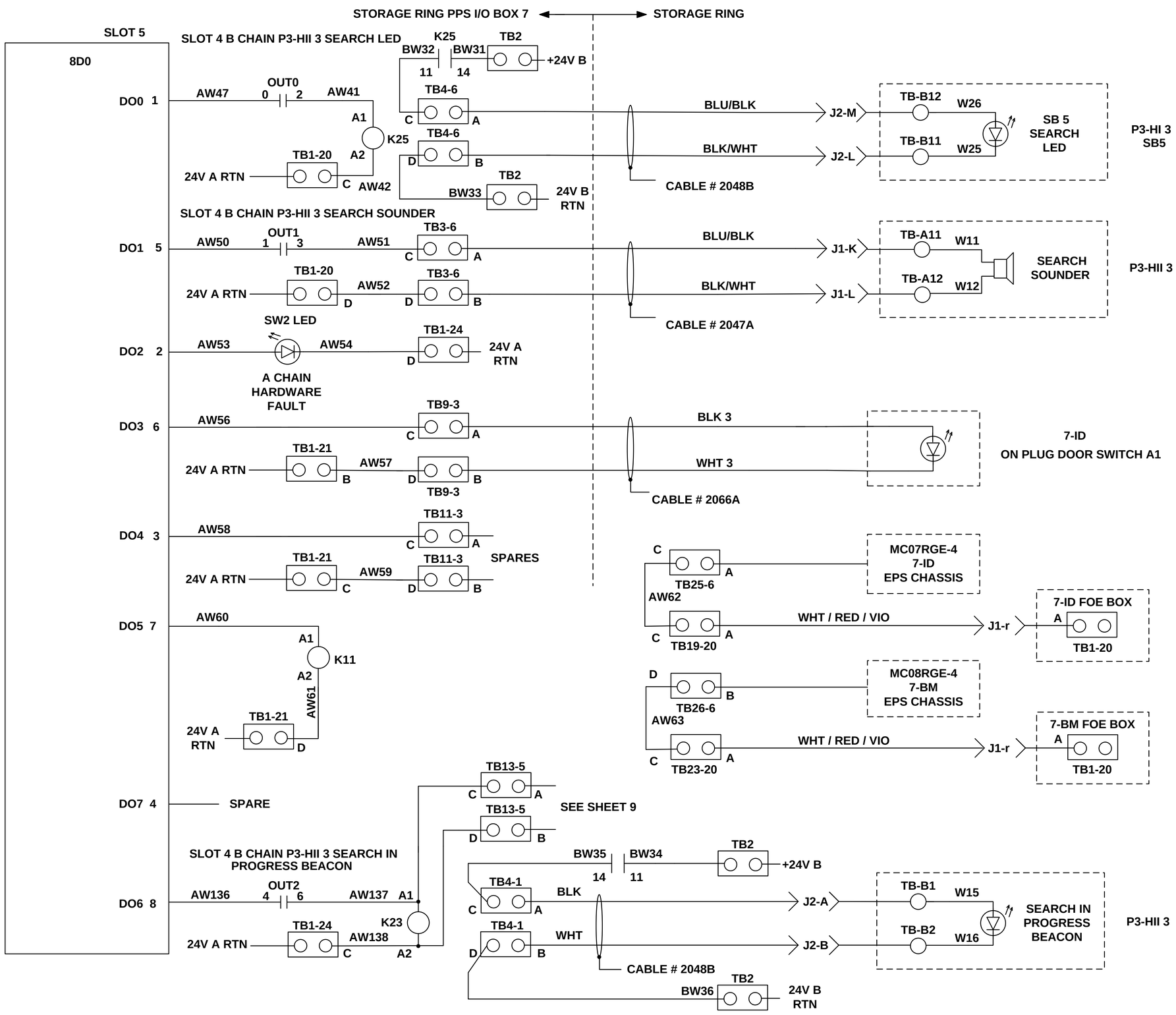

TO :
LT-ECN-017-1795
PAGE OF

COMMON GROUP

A

LT-EL-SR-EI-PPS-0207-90

LT-EL-SR-EI (DRAWING DIRECTORY)	LT-EL-SR-EI-PPS-0207-90 (DRAWING NUMBER)	E (REV)
COMPUTER REPRODUCABLE	SCALE: N/A	SHEET 4 OF 61

REV	DESCRIPTION	DATE	BY	CHECKED	APP
	SEE SHEET 1				

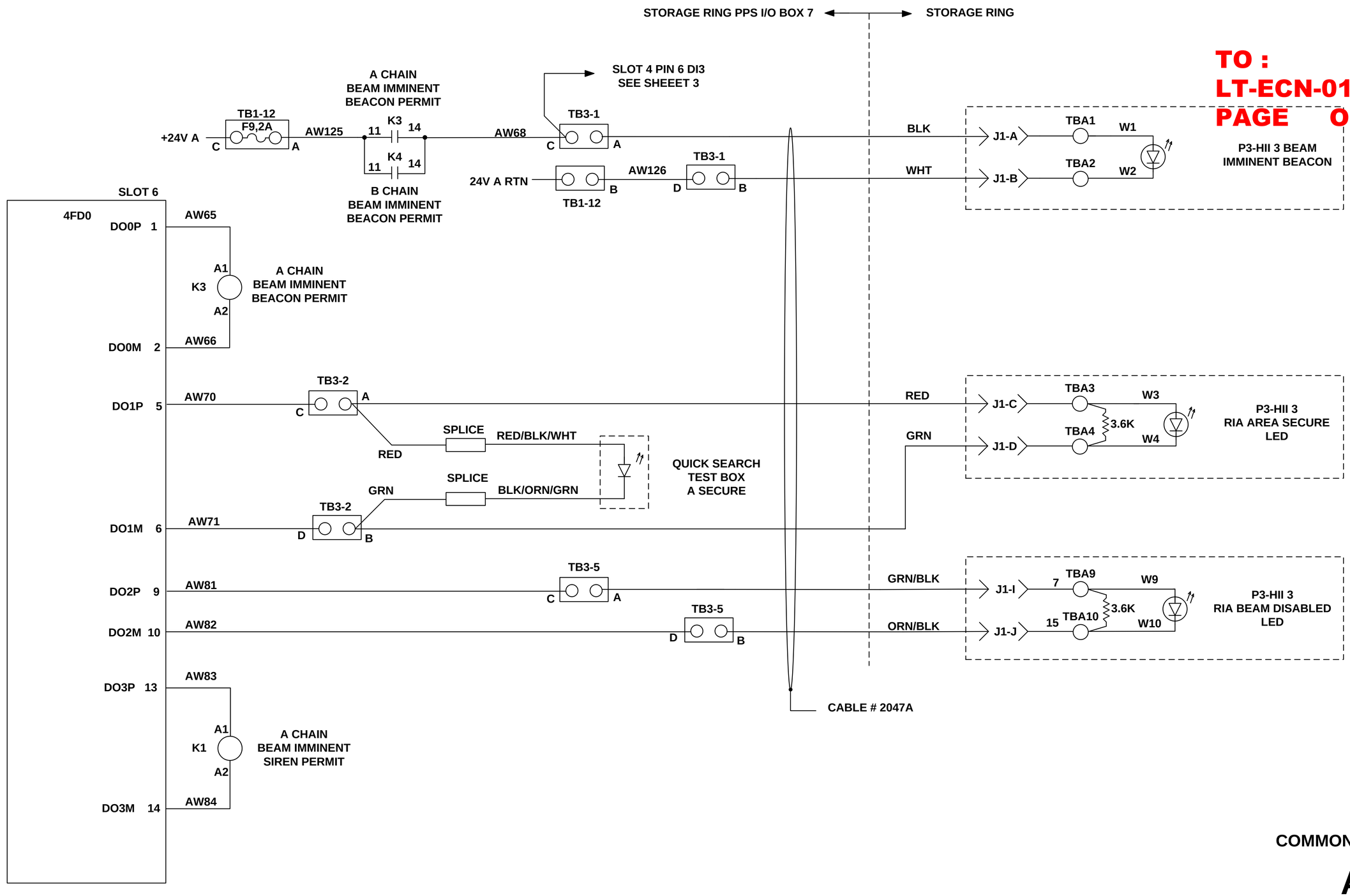

COMMON GROUP

A

LT-EL-SR-EI (DRAWING DIRECTORY)	LT-EL-SR-EI-PPS-0207-90 (DRAWING NUMBER)	E (REV)
COMPUTER REPRODUCABLE	SCALE: N/A	SHEET 5 OF 61

LT-EL-SR-EI-PPS-0207-90

REV	DESCRIPTION	DATE	BY	CHECKED	APP
	SEE SHEET 1				

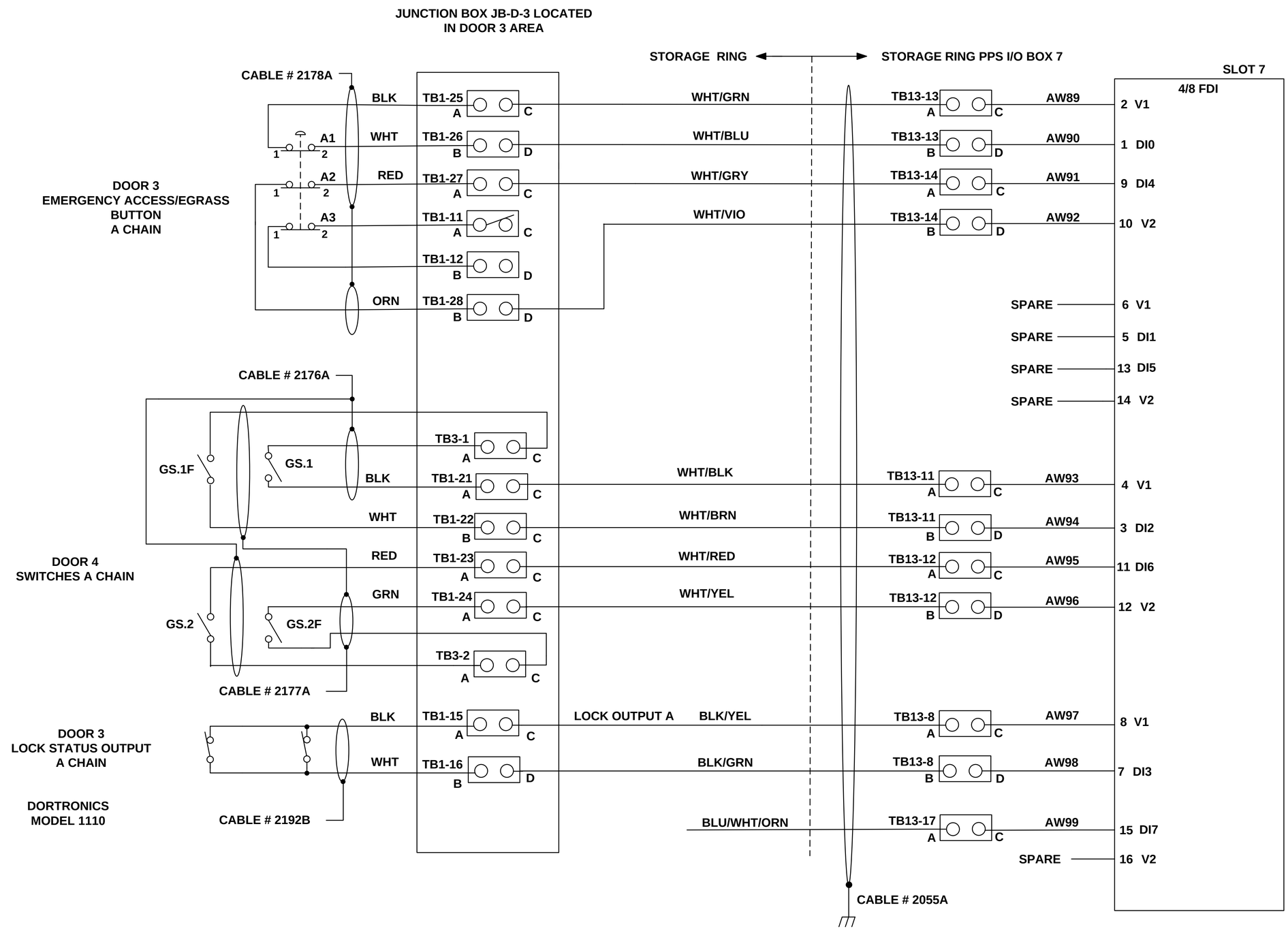

TO :
LT-ECN-017-1795
PAGE OF

GATE / LABYRINTH GROUP
DOOR 3

A

LT-EL-SR-EI-PPS-0207-90

LT-EL-SR-EI (DRAWING DIRECTORY)	LT-EL-SR-EI-PPS-0207-90 (DRAWING NUMBER)	E (REV)
COMPUTER REPRODUCABLE	SCALE: N/A	SHEET 6 OF 61

REV	DESCRIPTION	DATE	BY	CHECKED	APP
	SEE SHEET 1				

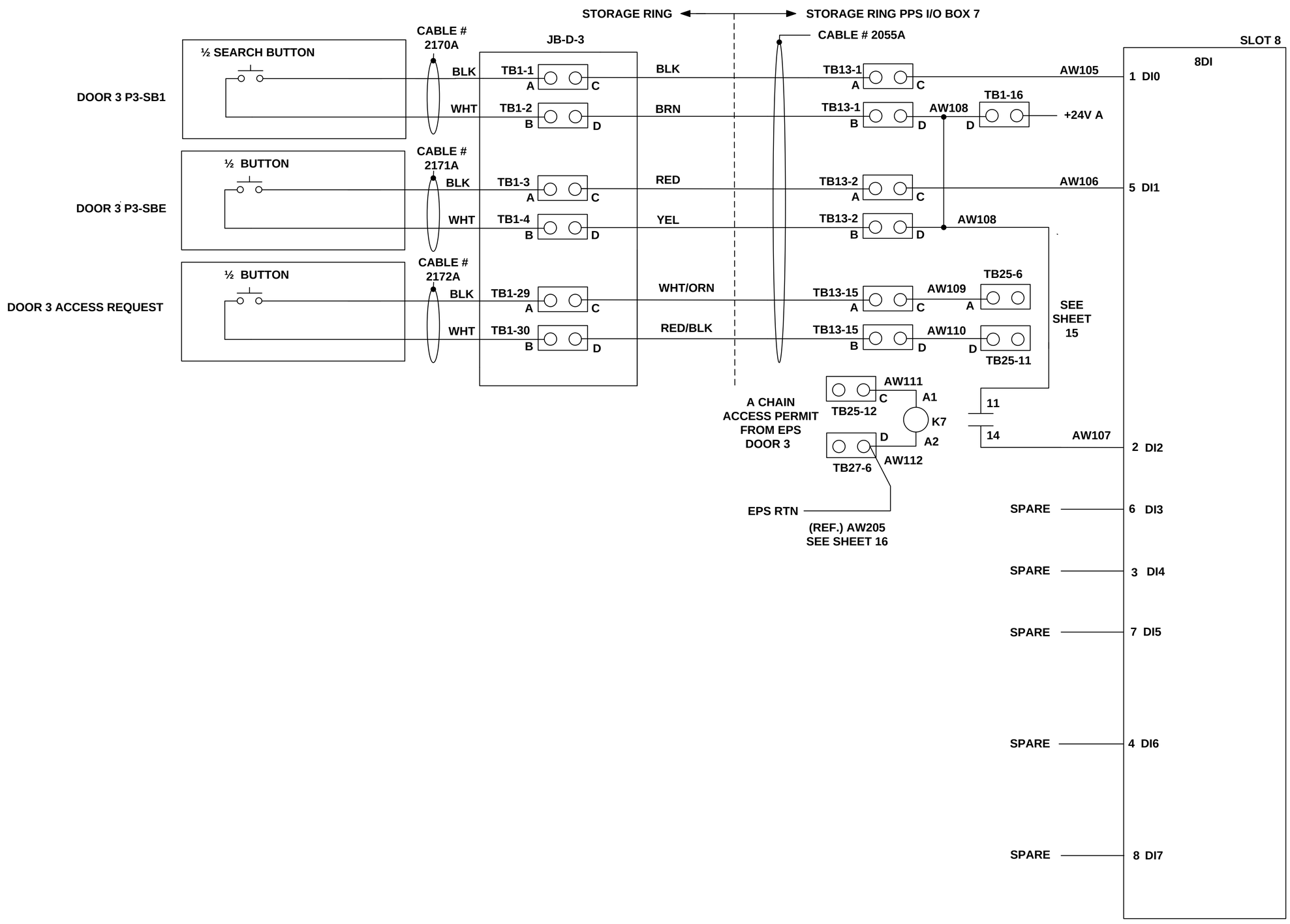

TO :
LT-ECN-017-1795
PAGE OF

GATE / LABYRINTH GROUP
DOOR 3

A

LT-EL-SR-EI (DRAWING DIRECTORY)	LT-EL-SR-EI-PPS-0207-90 (DRAWING NUMBER)	E (REV)
COMPUTER REPRODUCABLE	SCALE: N/A	SHEET 7 OF 61

LT-EL-SR-EI-PPS-0207-90

REV	DESCRIPTION	DATE	BY	CHECKED	APP
	SEE SHEET 1				

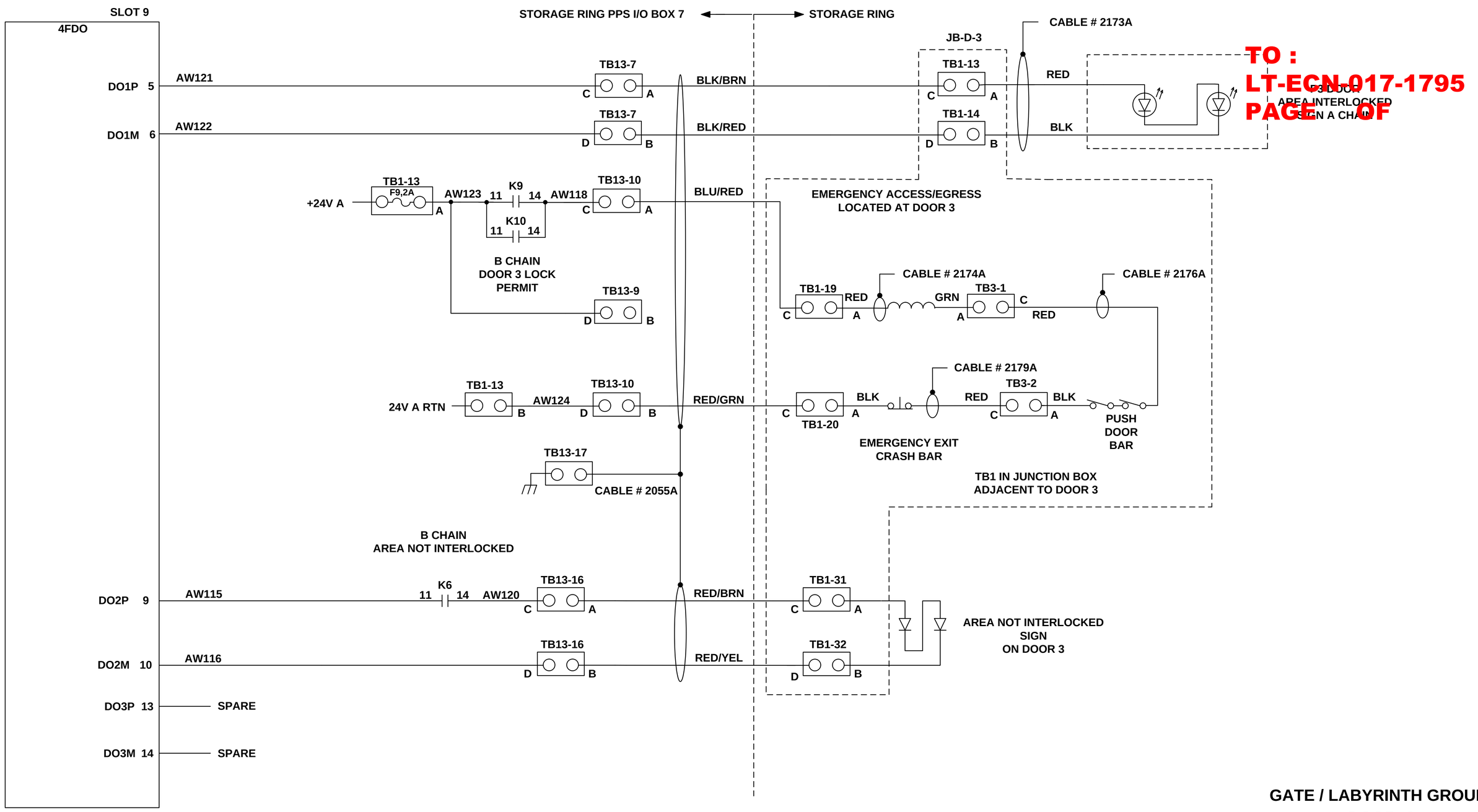

GATE / LABYRINTH GROUP
DOOR 3

A

LT-EL-SR-EI (DRAWING DIRECTORY)	LT-EL-SR-EI-PPS-0207-90 (DRAWING NUMBER)	E (REV)
COMPUTER REPRODUCABLE	SCALE: N/A	SHEET 8 OF 61

LT-EL-SR-EI-PPS-0207-90

REV	DESCRIPTION	DATE	BY	CHECKED	APP
	SEE SHEET 1				

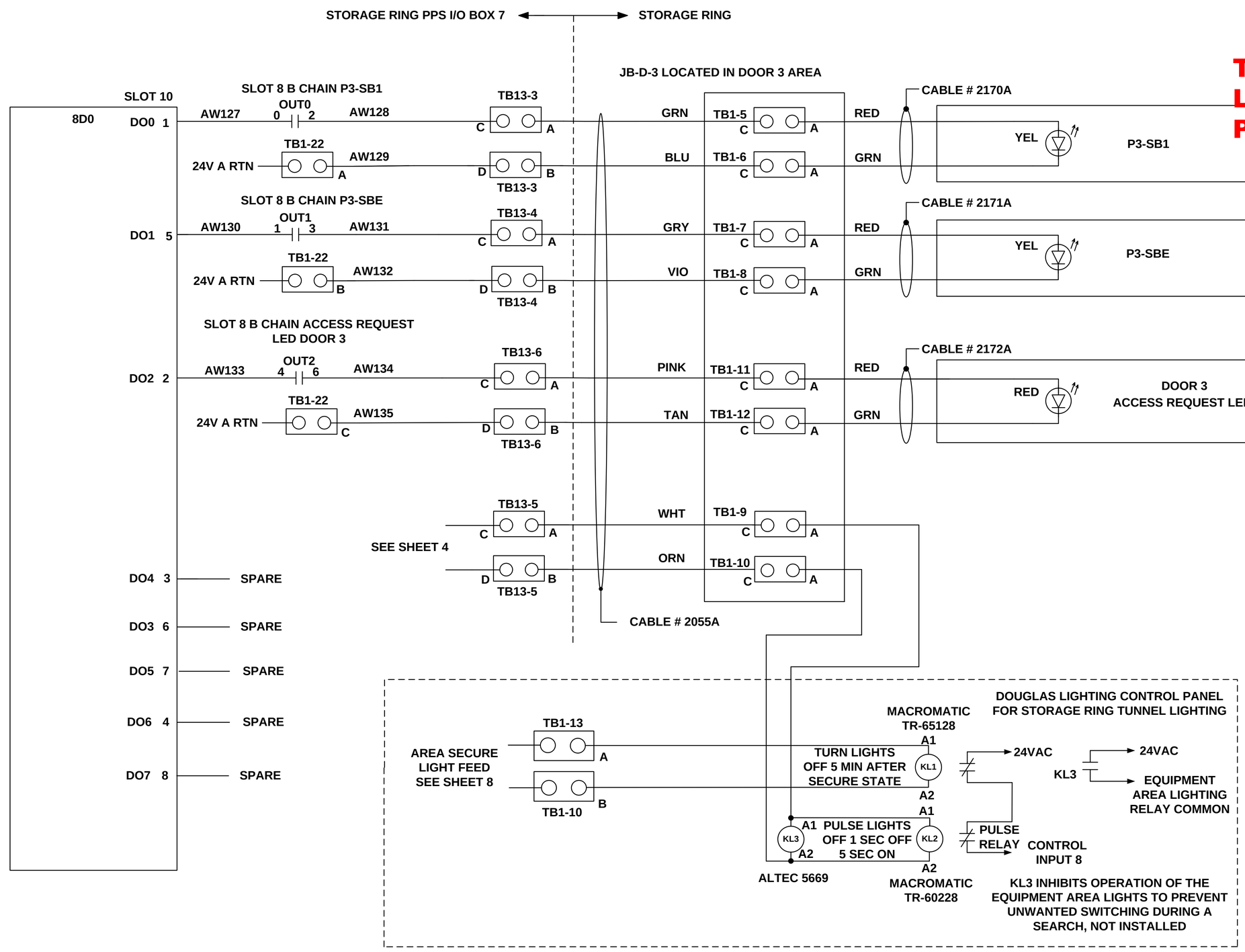

TO :
LT-ECN-017-1795
PAGE OF

GATE / LABYRINTH GROUP
DOOR 3

A

LT-EL-SR-EI (DRAWING DIRECTORY)	LT-EL-SR-EI-PPS-0207-90 (DRAWING NUMBER)	E (REV)
COMPUTER REPRODUCABLE	SCALE: N/A	SHEET 9 OF 61

LT-EL-SR-EI-PPS-0207-90

REV	DESCRIPTION	DATE	BY	CHECKED	APP
	SEE SHEET 1				

TO :
LT-ECN-017-1795
PAGE OF

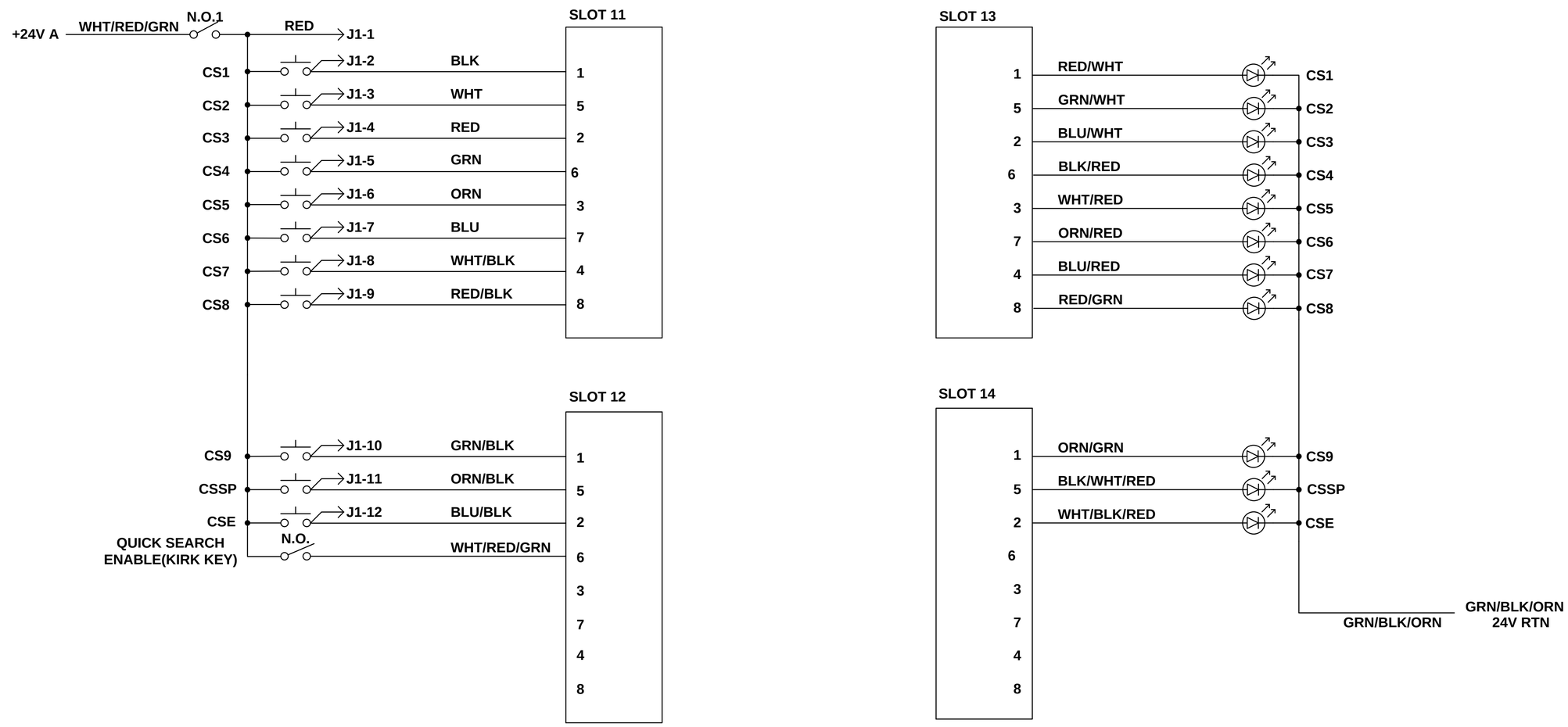

QUICK SEARCH
TEST BOX
COMMON GROUP

A

LT-EL-SR-EI DRAWING DIRECTORY	LT-EL-SR-EI-PPS-0207-90 DRAWING NUMBER	E REV
COMPUTER REPRODUCABLE	SCALE: N/A	SHEET 10 OF 61

LT-EL-SR-EI-PPS-0207-90

REV	DESCRIPTION	DATE	BY	CHECKED	APP
	SEE SHEET 1				

TO :
LT-ECN-017-1795
PAGE OF

SHEET LEFT BLANK
FOR FUTURE DATA

LT-EL-SR-EI-PPS-0207-90

LT-EL-SR-EI (DRAWING DIRECTORY)	LT-EL-SR-EI-PPS-0207-90 (DRAWING NUMBER)	E (REV)
COMPUTER REPRODUCABLE	SCALE: N/A	SHEET 11 OF 61

REV	DESCRIPTION	DATE	BY	CHECKED	APP
	SEE SHEET 1				

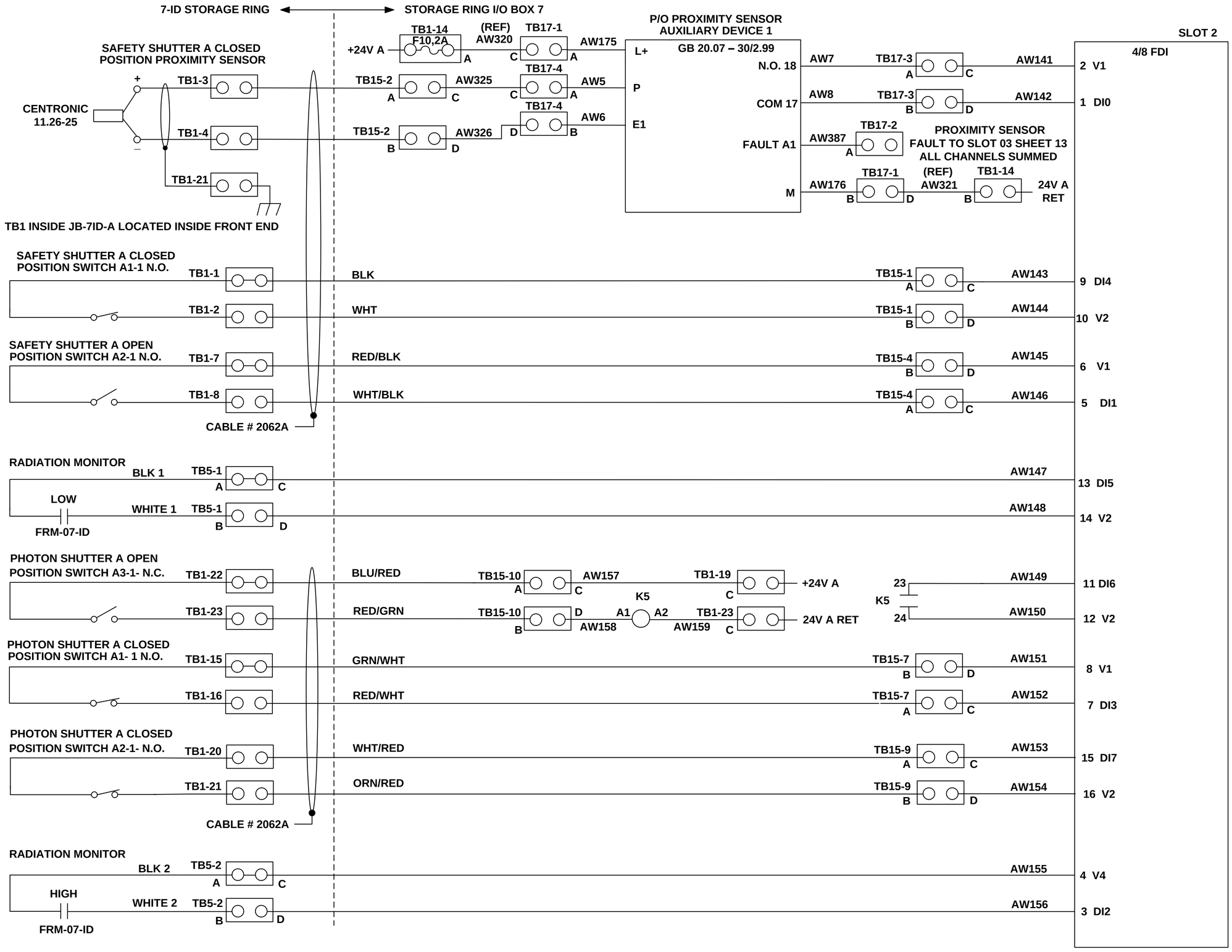

TO :
LT-ECN-017-1795
PAGE OF

ID BEAMLINE GROUP
7-ID
A

LT-EL-SR-EI-PPS-0207-90

LT-EL-SR-EI (DRAWING DIRECTORY)	LT-EL-SR-EI-PPS-0207-90 (DRAWING NUMBER)	E (REV)
COMPUTER REPRODUCABLE	SCALE: N/A	SHEET 12 OF 61

REV	DESCRIPTION	DATE	BY	CHECKED	APP
	SEE SHEET 1				

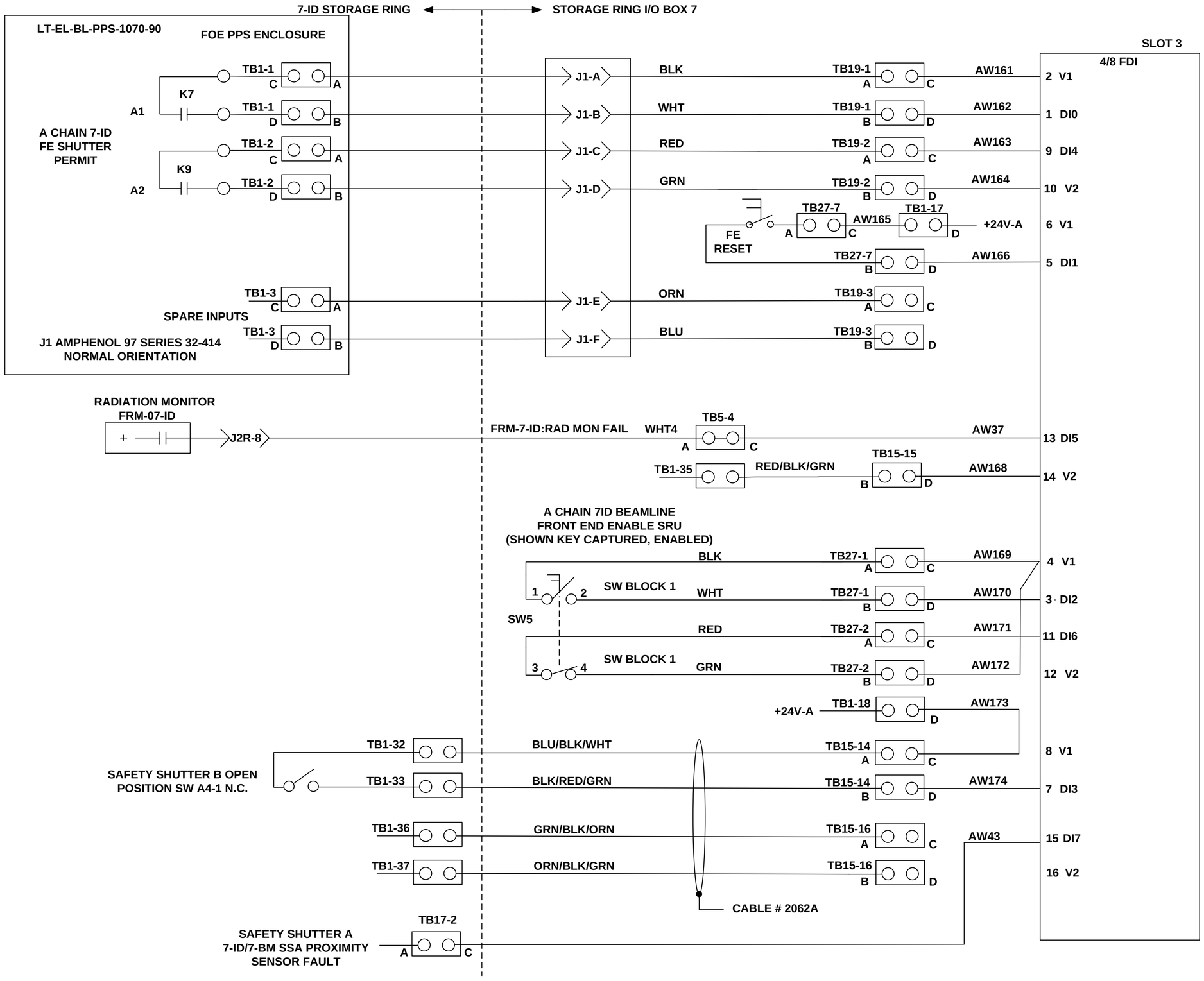

TO :
LT-ECN-017-1795
PAGE OF

ID BEAMLINE GROUP
7-ID
A

LT-EL-SR-EI-PPS-0207-90

LT-EL-SR-EI (DRAWING DIRECTORY)	LT-EL-SR-EI-PPS-0207-90 (DRAWING NUMBER)	E (REV)
COMPUTER REPRODUCABLE	SCALE: N/A	SHEET 13 OF 61

REV	DESCRIPTION	DATE	BY	CHECKED	APP
	SEE SHEET 1				

TO :
LT-ECN-017-1795
PAGE OF

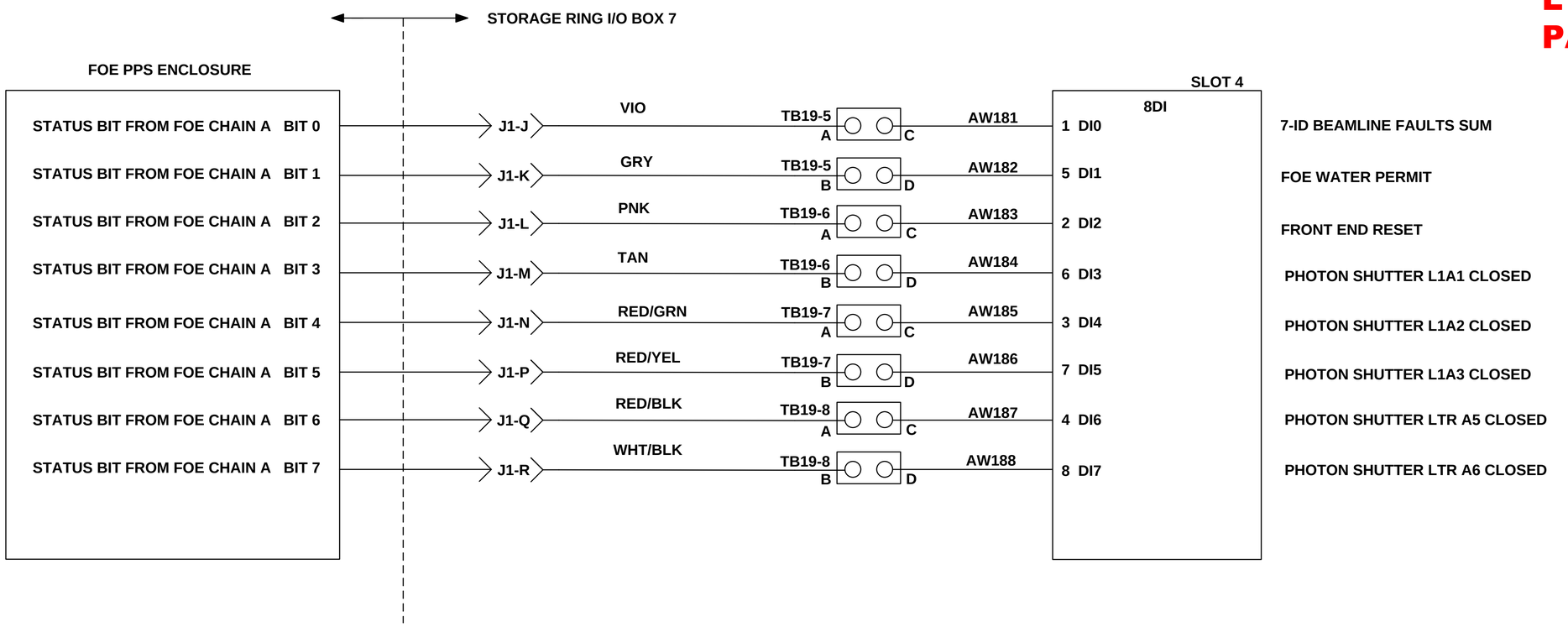

ID BEAMLINE GROUP

7-ID

A

LT-EL-SR-EI (DRAWING DIRECTORY)	LT-EL-SR-EI-PPS-0207-90 (DRAWING NUMBER)	E (REV)
COMPUTER REPRODUCABLE	SCALE: N/A	SHEET 14 OF 61

LT-EL-SR-EI-PPS-0207-90

REV	DESCRIPTION	DATE	BY	CHECKED	APP
	SEE SHEET 1				

TO :
LT-ECN-017-1795
PAGE OF

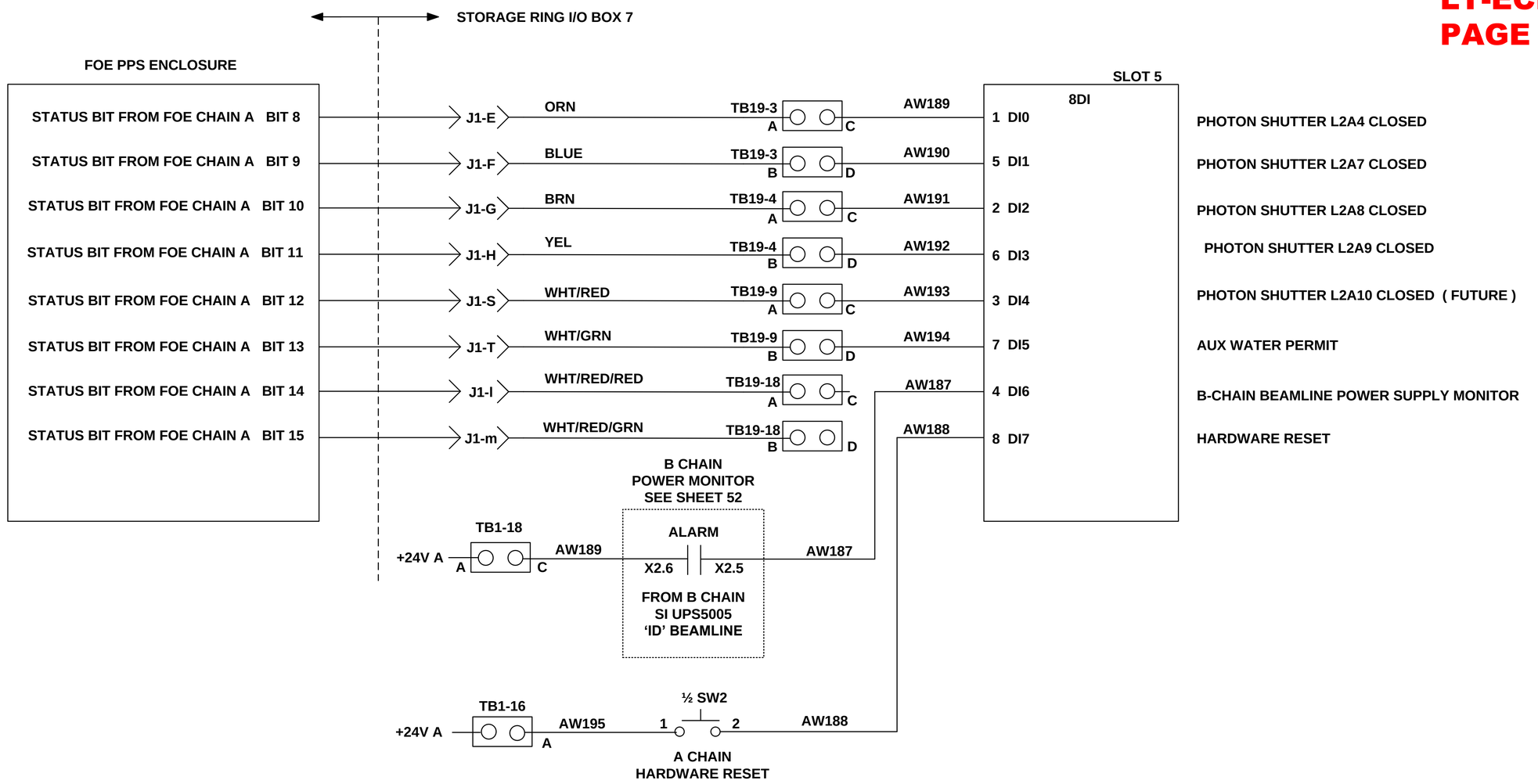

ID BEAMLINE GROUP
7-ID
A

LT-EL-SR-EI (DRAWING DIRECTORY)	LT-EL-SR-EI-PPS-0207-90 (DRAWING NUMBER)	E (REV)
COMPUTER REPRODUCABLE	SCALE: N/A	SHEET 15 OF 61

LT-EL-SR-EI-PPS-0207-90

REV	DESCRIPTION	DATE	BY	CHECKED	APP
	SEE SHEET 1				

TO :
LT-ECN-017-1795
PAGE OF

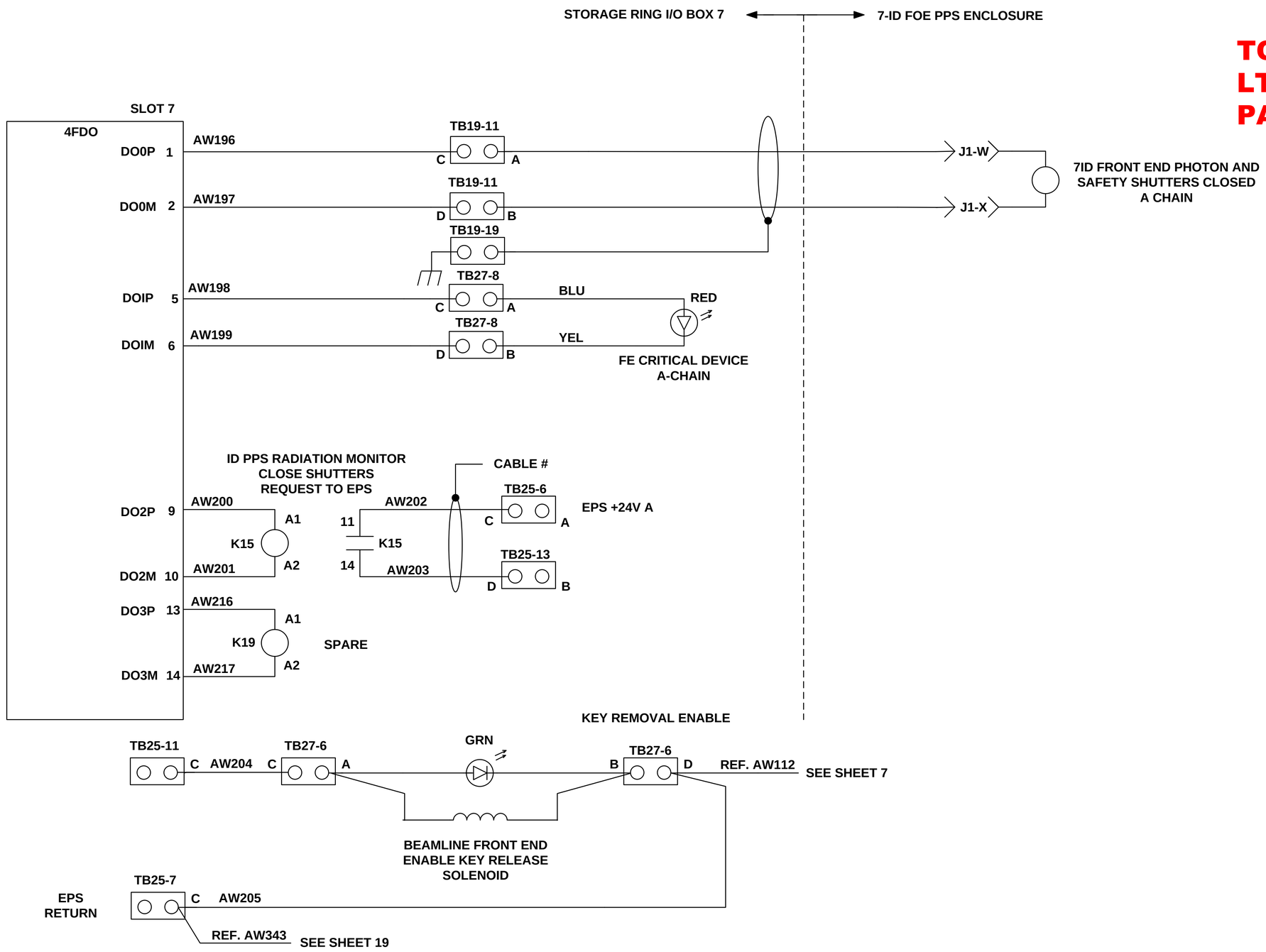

ID BEAMLINE GROUP

7-ID

A

LT-EL-SR-EI (DRAWING DIRECTORY)	LT-EL-SR-EI-PPS-0207-90 (DRAWING NUMBER)	E (REV)
COMPUTER REPRODUCABLE	SCALE: N/A	SHEET 16 OF 61

LT-EL-SR-EI-PPS-0207-90

REV	DESCRIPTION	DATE	BY	CHECKED	APP
	SEE SHEET 1				

TO :
LT-ECN-017-1795
PAGE OF

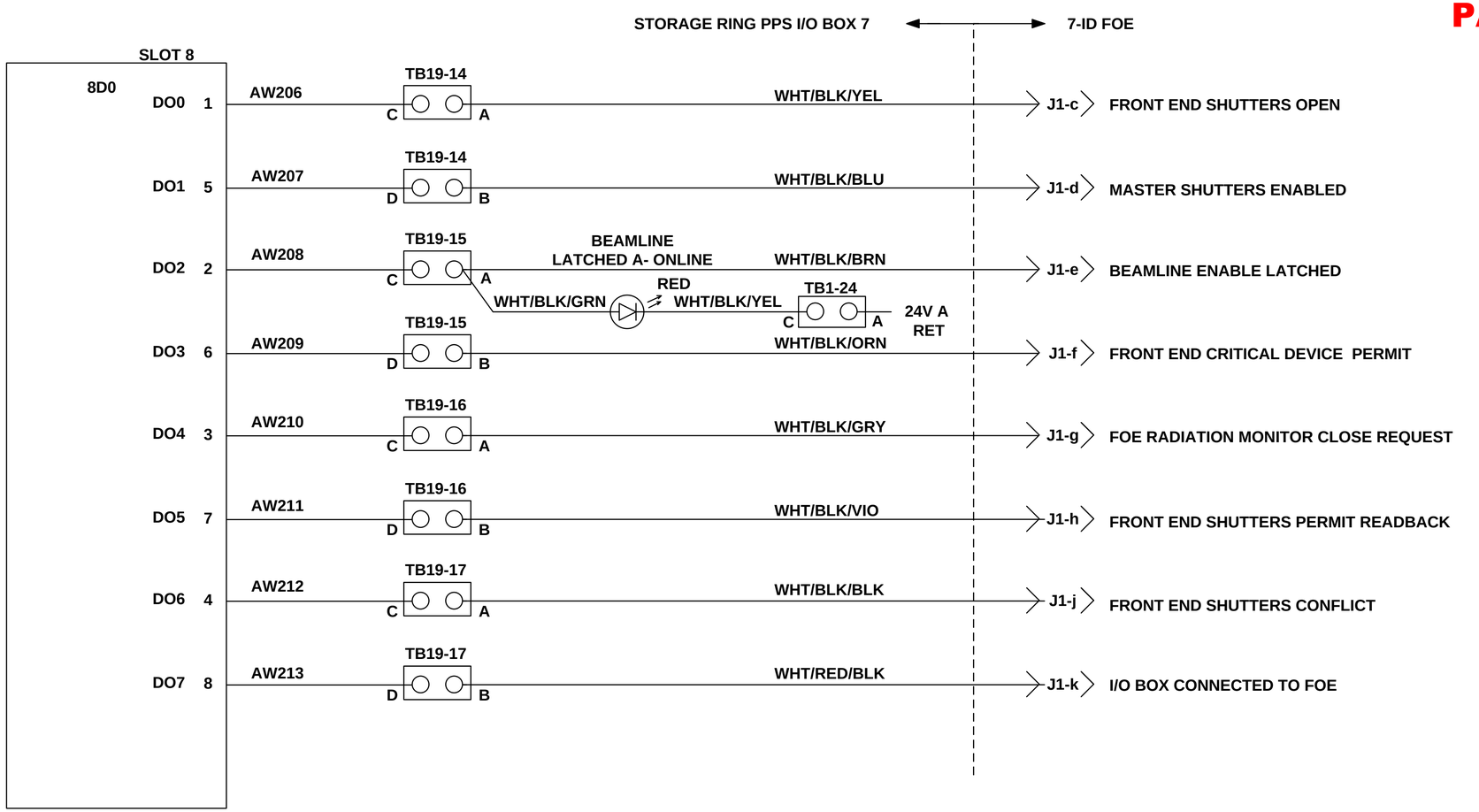

ID BEAMLINE GROUP

7-ID

A

LT-EL-SR-EI (DRAWING DIRECTORY)	LT-EL-SR-EI-PPS-0207-90 (DRAWING NUMBER)	E (REV)
COMPUTER REPRODUCABLE	SCALE: N/A	SHEET 17 OF 61

LT-EL-SR-EI-PPS-0207-90

REV	DESCRIPTION	DATE	BY	CHECKED	APP
	SEE SHEET 1				

TO :
LT-ECN-017-1795
PAGE OF

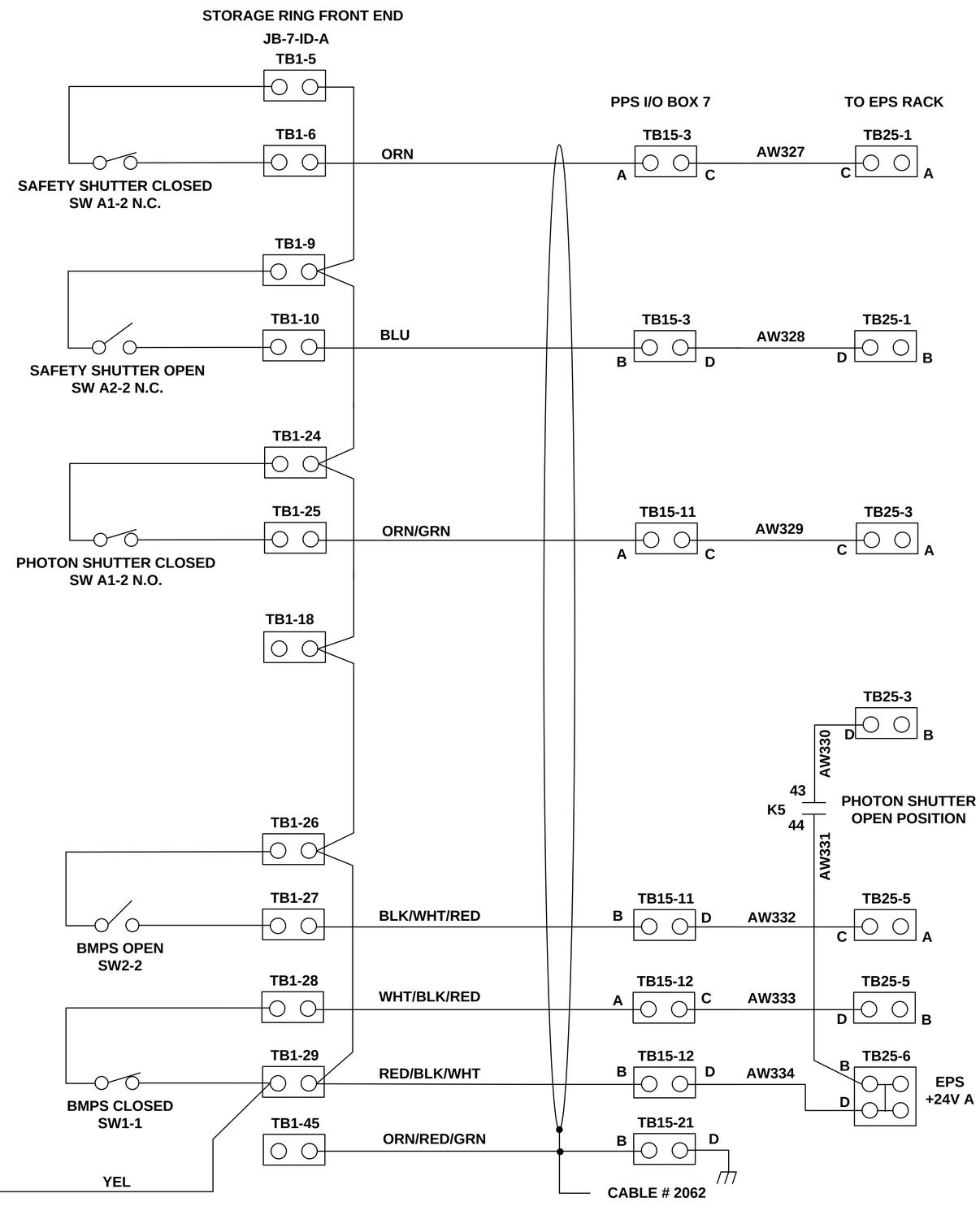

ID BEAMLINE GROUP

7-ID

A

LT-EL-SR-EI (DRAWING DIRECTORY)	LT-EL-SR-EI-PPS-0207-90 (DRAWING NUMBER)	E (REV)
COMPUTER REPRODUCABLE	SCALE: N/A	SHEET 18 OF 61

LT-EL-SR-EI-PPS-0207-90

REV	DESCRIPTION	DATE	BY	CHECKED	APP
	SEE SHEET 1				

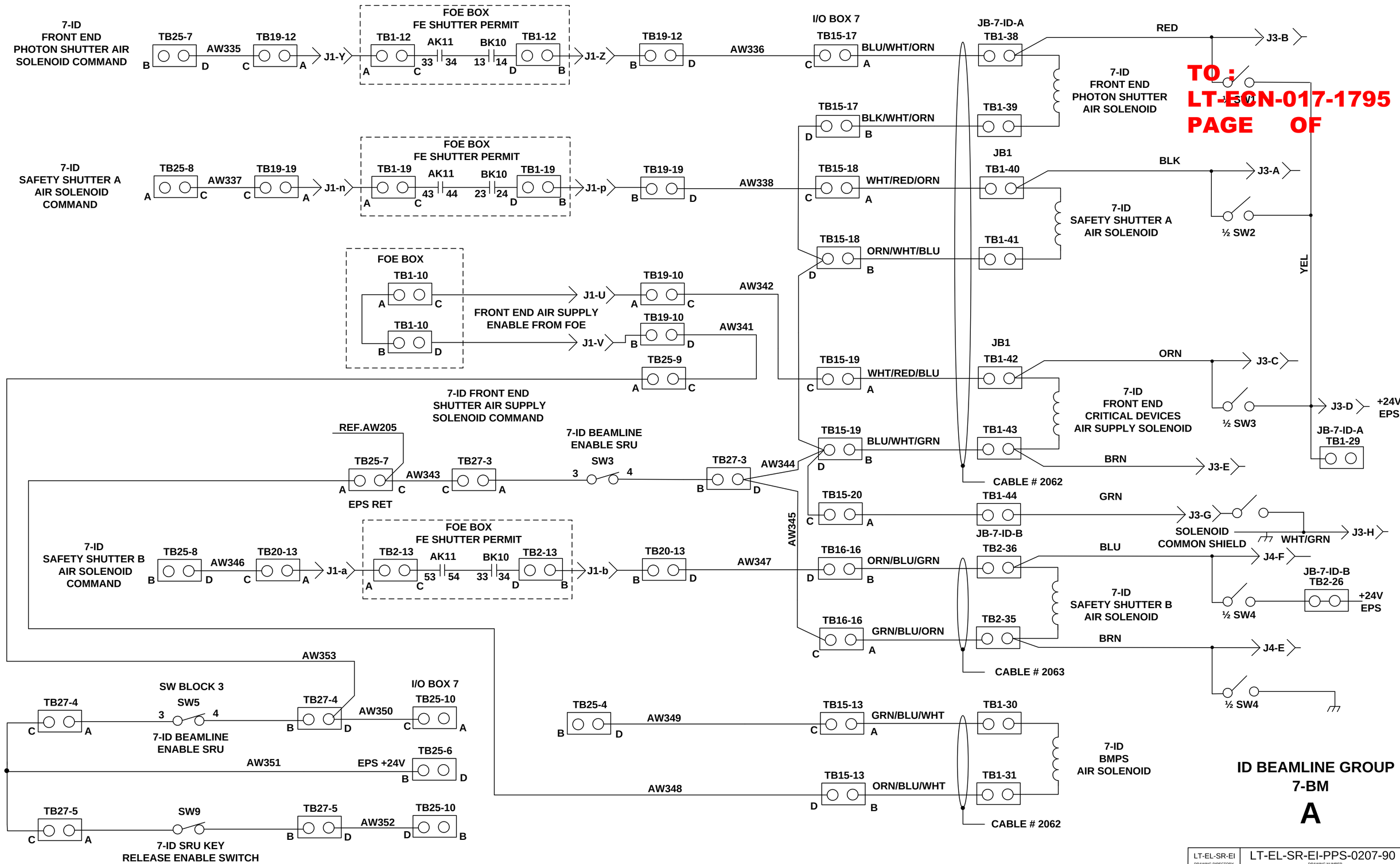

TO : LT-ECN-017-1795
PAGE OF

LT-EL-SR-EI (DRAWING DIRECTORY)	LT-EL-SR-EI-PPS-0207-90 (DRAWING NUMBER)	E (REV)
COMPUTER REPRODUCABLE	SCALE: N/A	SHEET 19 OF 61

LT-EL-SR-EI-PPS-0207-90

REV	DESCRIPTION	DATE	BY	CHECKED	APP
	SEE SHEET 1				

TO :
LT-ECN-017-1795
PAGE OF

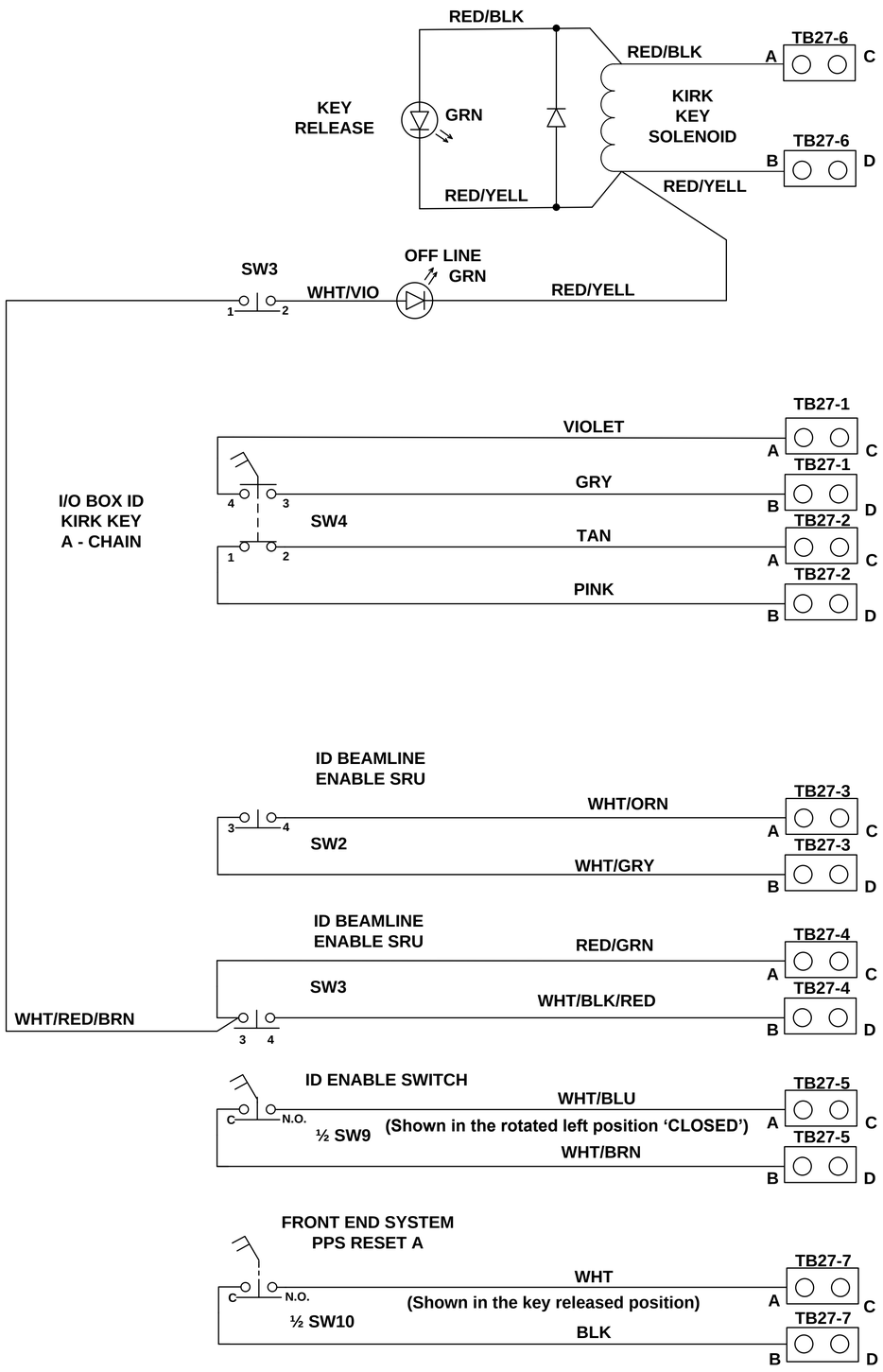

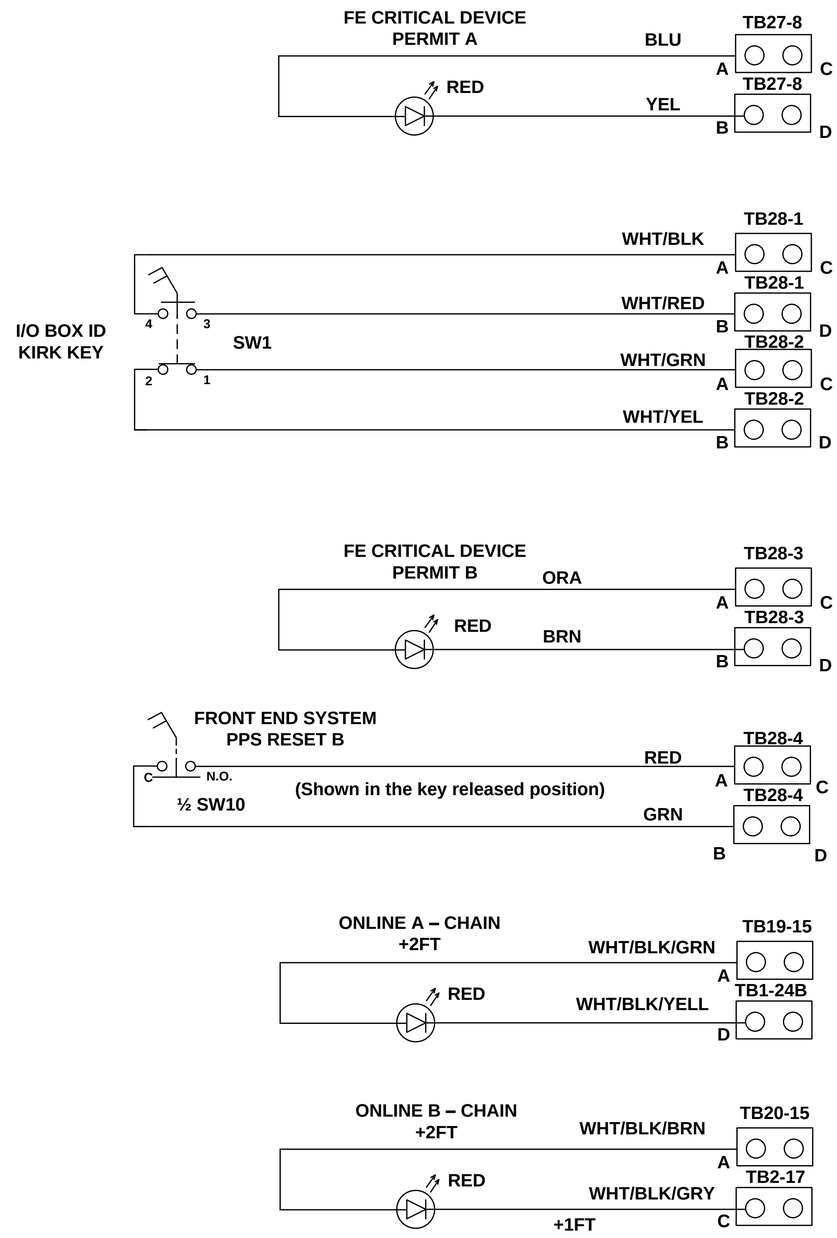

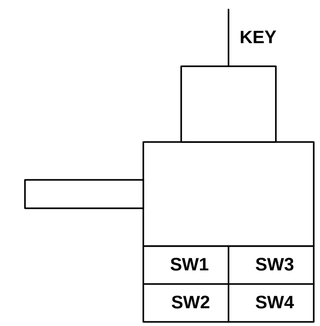

KIRK KEY
SRU UNIT

PIGTAIL
TB 27 A- CHAIN 46" LONG
TB28 B – CHAIN 36" LONG

ID ½ BEAMLINE ENABLE PANEL

LT-EL-SR-EI-PPS-0207-90

LT-EL-SR-EI (DRAWING DIRECTORY)	LT-EL-SR-EI-PPS-0207-90 (DRAWING NUMBER)	E (REV)
COMPUTER REPRODUCABLE	SCALE: N/A	SHEET 20 OF 61

REV	DESCRIPTION	DATE	BY	CHECKED	APP
	SEE SHEET 1				

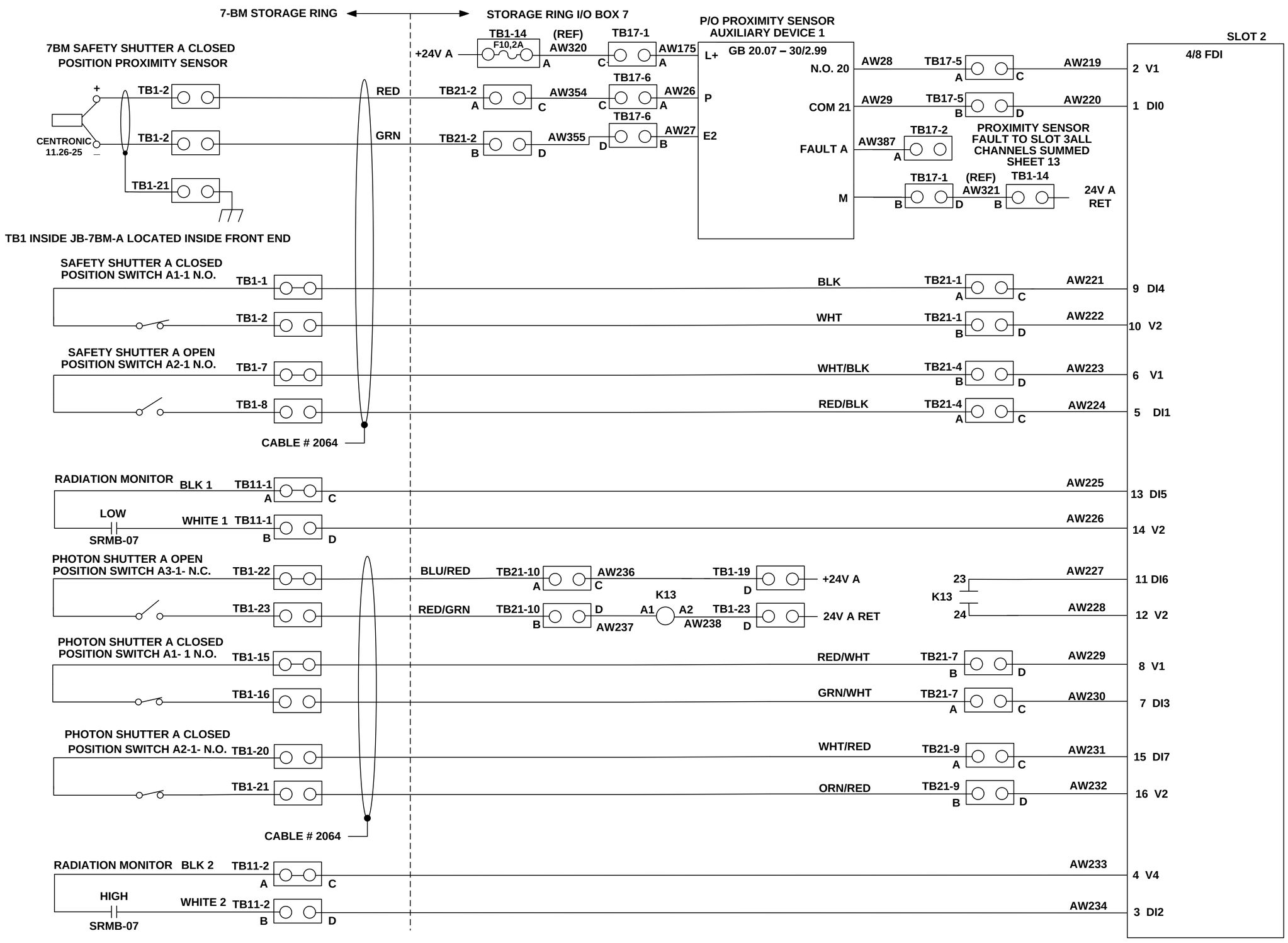

TO :
LT-ECN-017-1795
PAGE OF

BM BEAMLINE GROUP
7-BM
A

LT-EL-SR-EI-PPS-0207-90

LT-EL-SR-EI (DRAWING DIRECTORY)	LT-EL-SR-EI-PPS-0207-90 (DRAWING NUMBER)	E (REV)
COMPUTER REPRODUCABLE	SCALE: N/A	SHEET 21 OF 61

REV	DESCRIPTION	DATE	BY	CHECKED	APP
	SEE SHEET 1				

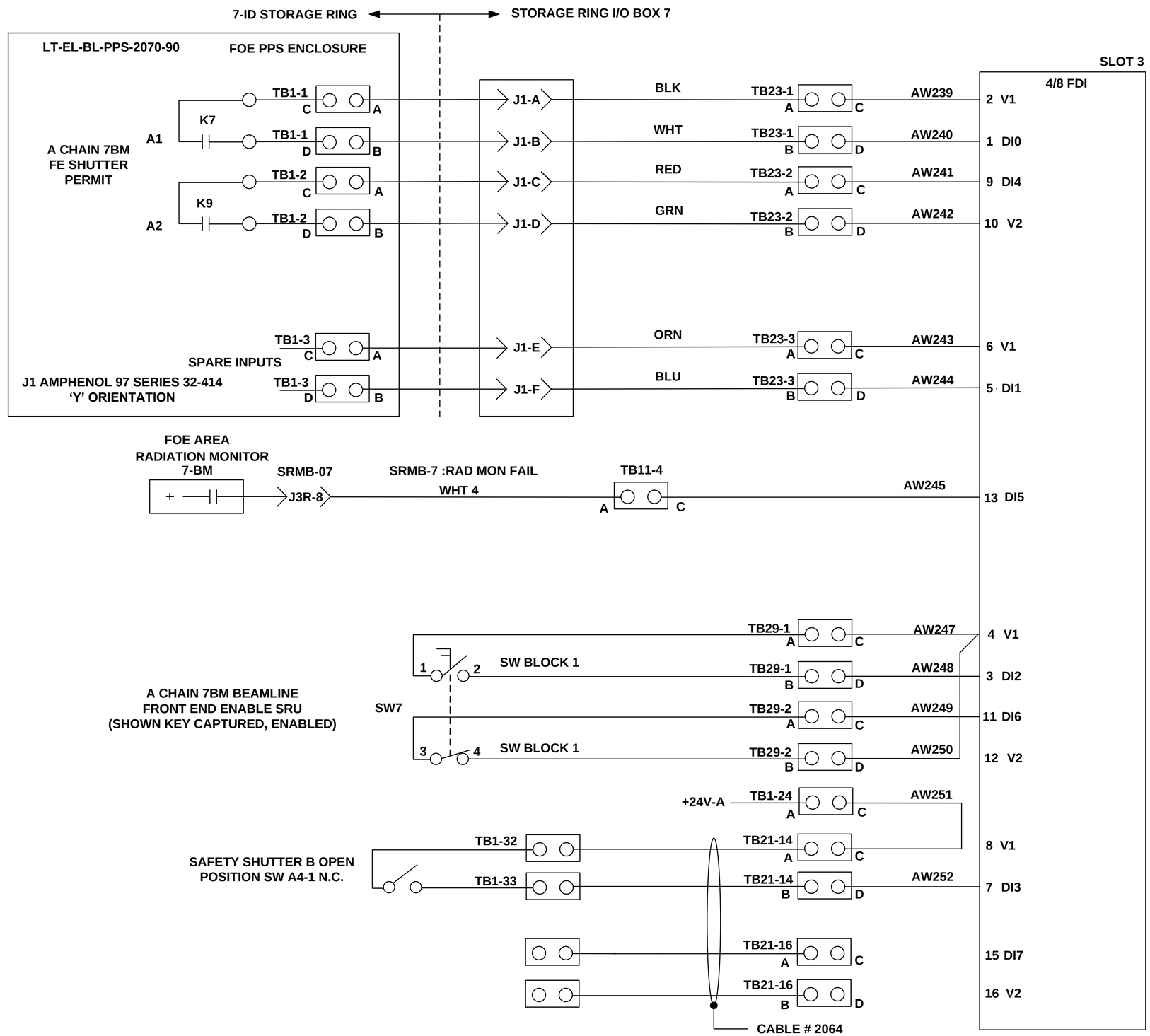

TO :
LT-ECN-017-1795
PAGE OF

BM BEAMLINE GROUP

7-BM

A

LT-EL-SR-EI (DRAWING DIRECTORY)	LT-EL-SR-EI-PPS-0207-90 (DRAWING NUMBER)	E (REV)
COMPUTER REPRODUCABLE	SCALE: N/A	SHEET 22 OF 61

LT-EL-SR-EI-PPS-0207-90

REV	DESCRIPTION	DATE	BY	CHECKED	APP
	SEE SHEET 1				

TO :
LT-ECN-017-1795
PAGE OF

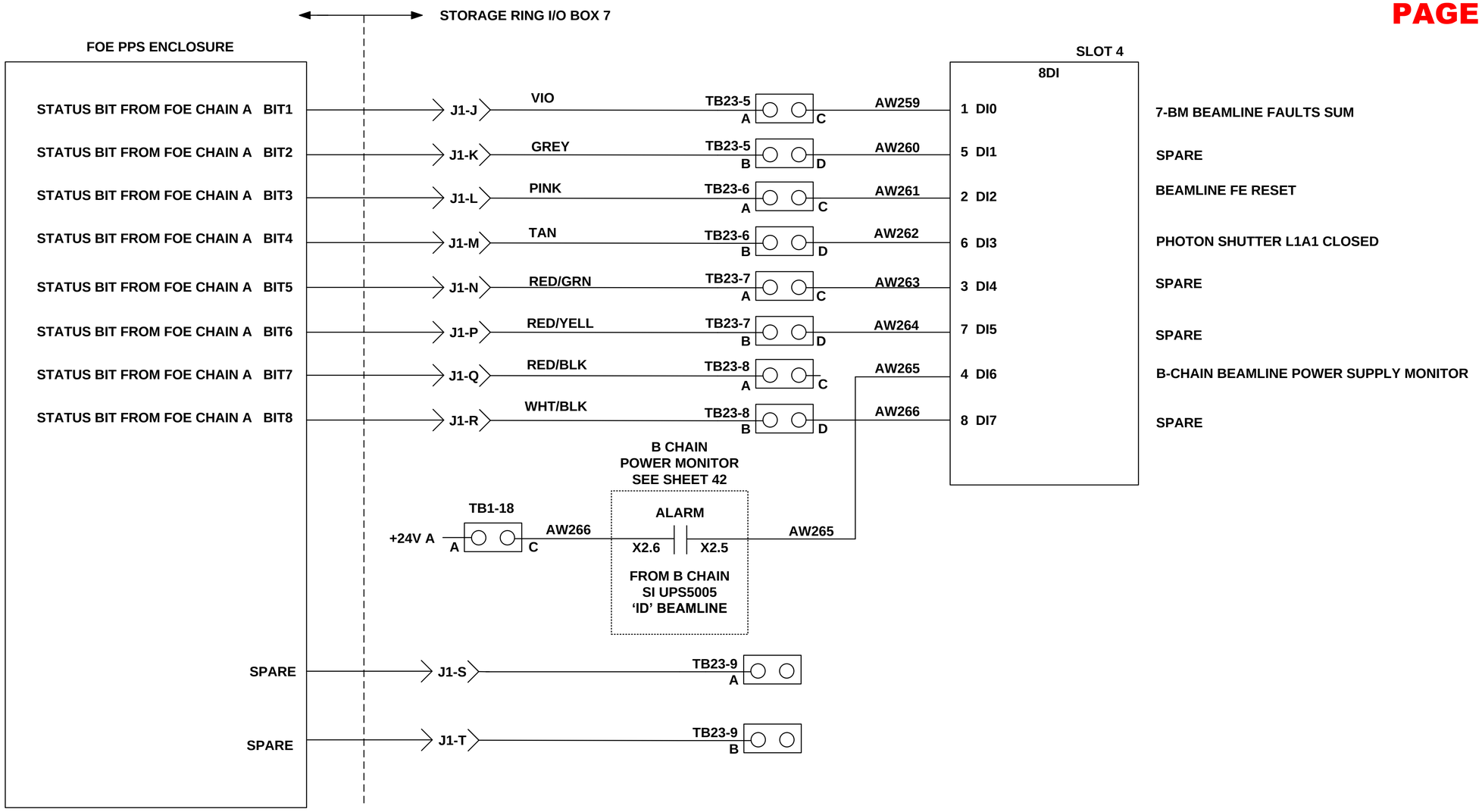

BM BEAMLINE GROUP

7-BM

A

LT-EL-SR-EI DRAWING DIRECTORY	LT-EL-SR-EI-PPS-0207-90 DRAWING NUMBER	E REV
COMPUTER REPRODUCABLE	SCALE: N/A	SHEET 23 OF 61

LT-EL-SR-EI-PPS-0207-90

REV	DESCRIPTION	DATE	BY	CHECKED	APP
	SEE SHEET 1				

TO :
LT-ECN-017-1795
PAGE OF

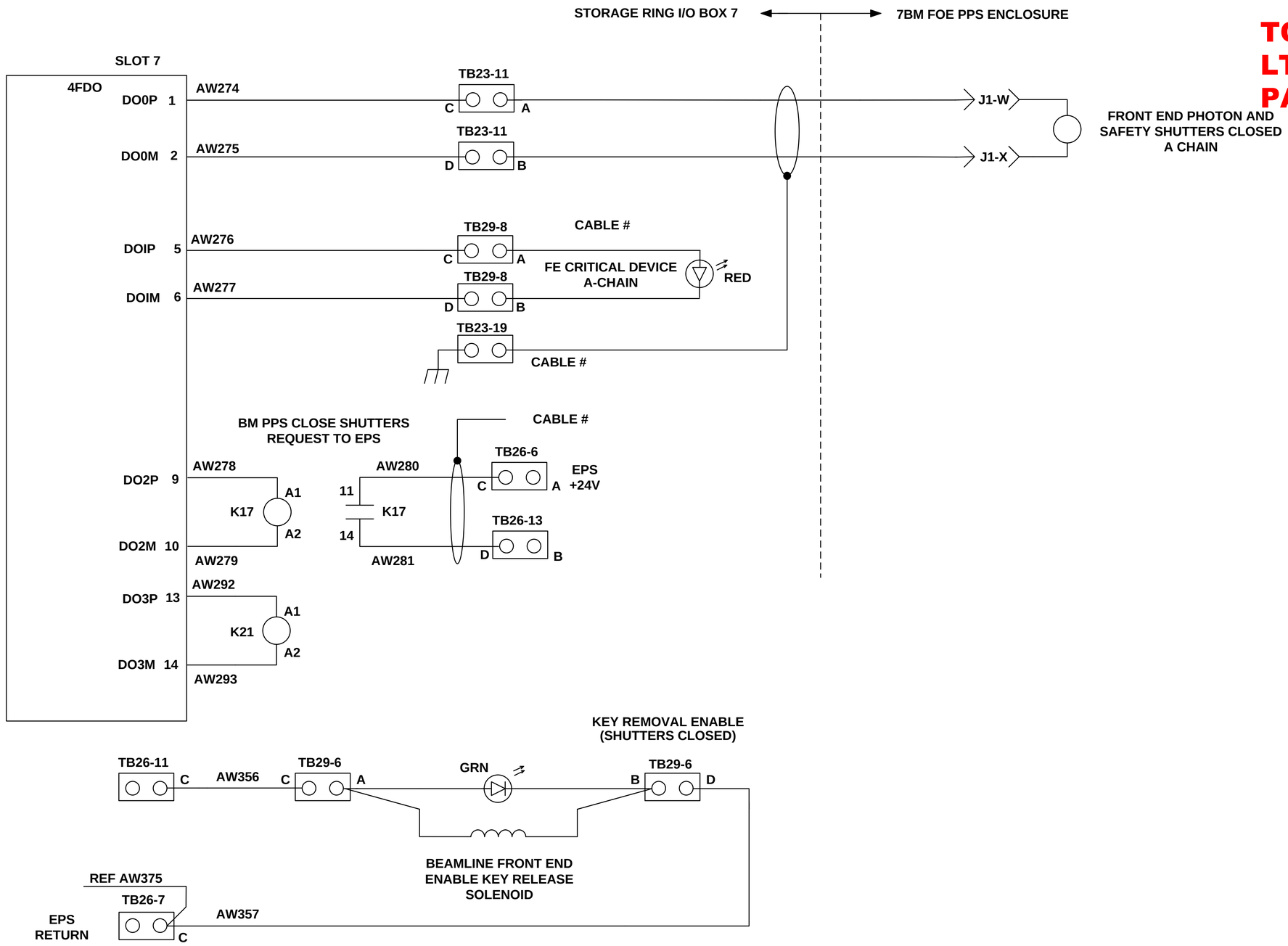

BM BEAMLINE GROUP
7-BM
A

LT-EL-SR-EI-PPS-0207-90

LT-EL-SR-EI (DRAWING DIRECTORY)	LT-EL-SR-EI-PPS-0207-90 (DRAWING NUMBER)	E (REV)
COMPUTER REPRODUCABLE	SCALE: N/A	SHEET 24 OF 61

REV	DESCRIPTION	DATE	BY	CHECKED	APP
	SEE SHEET 1				

TO :
LT-ECN-017-1795
PAGE OF

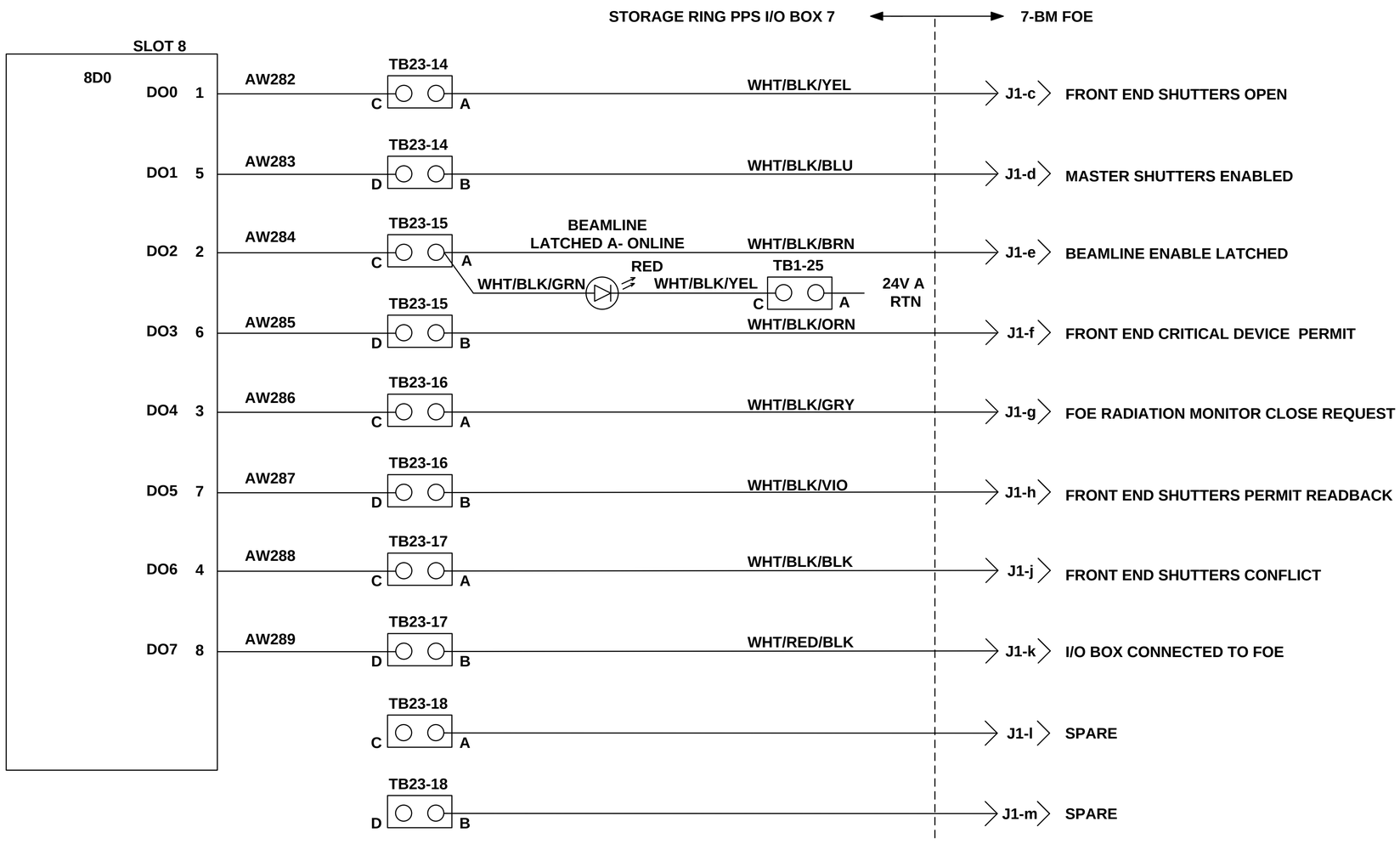

BM BEAMLINE GROUP
7-BM
A

LT-EL-SR-EI (DRAWING DIRECTORY)	LT-EL-SR-EI-PPS-0207-90 (DRAWING NUMBER)	E (REV)
COMPUTER REPRODUCABLE	SCALE: N/A	SHEET 25 OF 61

LT-EL-SR-EI-PPS-0207-90

REV	DESCRIPTION	DATE	BY	CHECKED	APP
	SEE SHEET 1				

TO :
LT-ECN-017-1795
PAGE OF

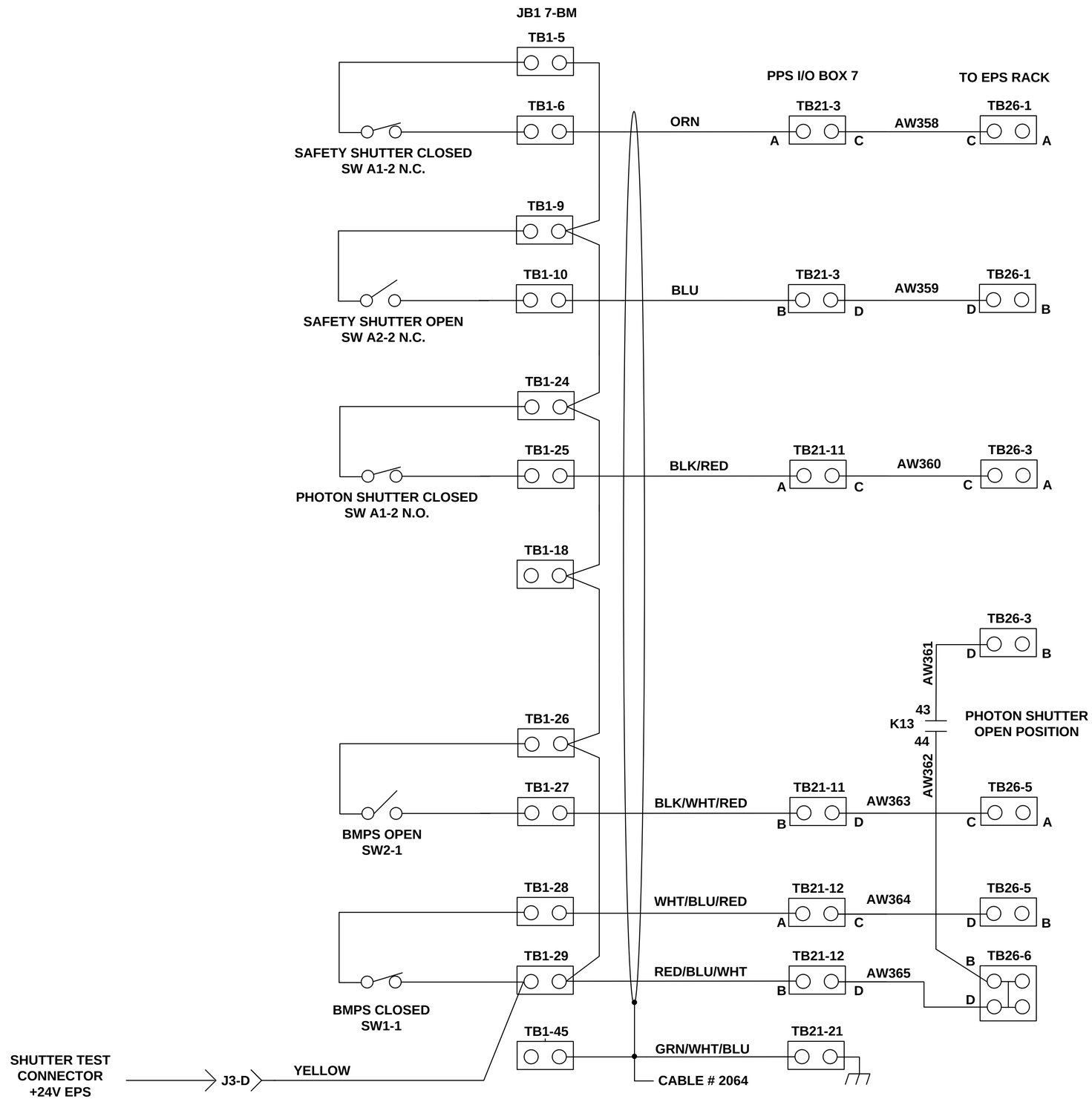

BM BEAMLINE GROUP

7-BM

A

LT-EL-SR-EI (DRAWING DIRECTORY)	LT-EL-SR-EI-PPS-0207-90 (DRAWING NUMBER)	E (REV)
COMPUTER REPRODUCABLE	SCALE: N/A	SHEET 26 OF 61

LT-EL-SR-EI-PPS-0207-90

REV	DESCRIPTION	DATE	BY	CHECKED	APP
	SEE SHEET 1				

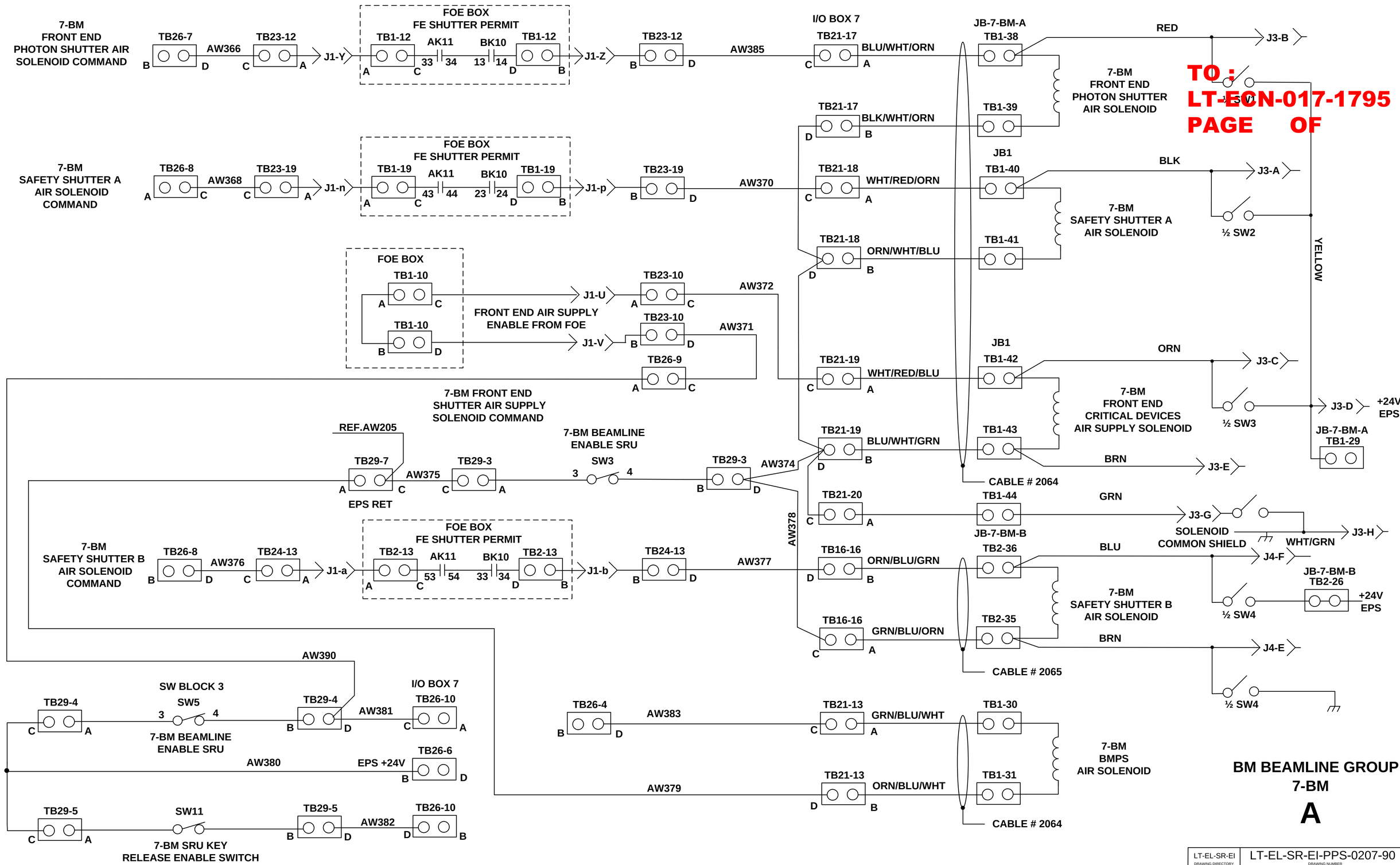

TO : LT-ECN-017-1795
PAGE OF

LT-EL-SR-EI-PPS-0207-90

LT-EL-SR-EI (DRAWING DIRECTORY)	LT-EL-SR-EI-PPS-0207-90 (DRAWING NUMBER)	E (REV)
COMPUTER REPRODUCABLE	SCALE: N/A	SHEET 27 OF 61

REV	DESCRIPTION	DATE	BY	CHECKED	APP
	SEE SHEET 1				

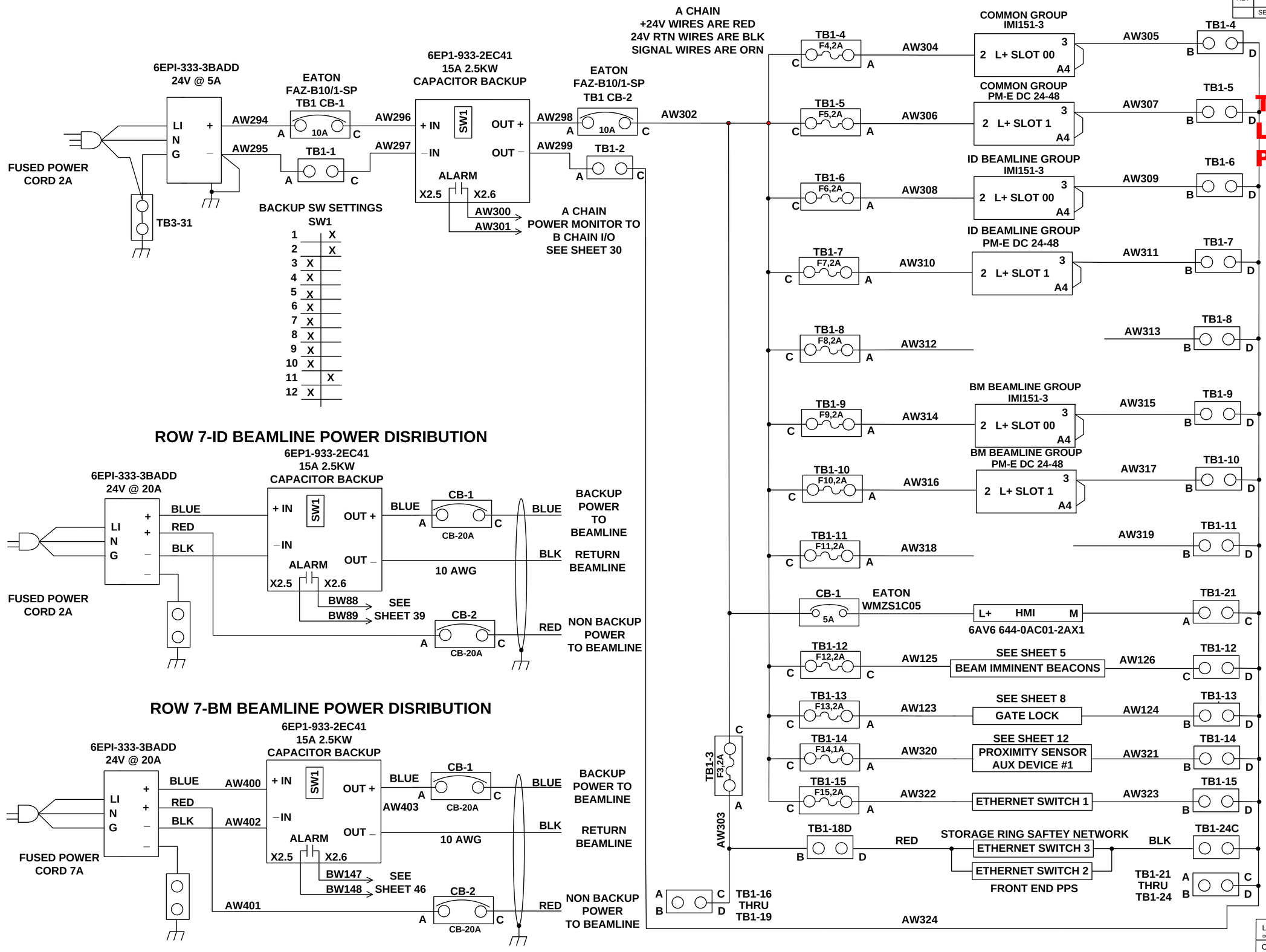

TO :
LT-ECN-017-1795
PAGE OF

POWER DISTRIBUTION

7-BM

A

LT-EL-SR-EI-PPS-0207-90

LT-EL-SR-EI (DRAWING DIRECTORY)	LT-EL-SR-EI-PPS-0207-90 (DRAWING NUMBER)	E (REV)
COMPUTER REPRODUCABLE	SCALE: N/A	SHEET 29 OF 61

REV	DESCRIPTION	DATE	BY	CHECKED	APP
	SEE SHEET 1				

TO :
LT-ECN-017-1795
PAGE OF

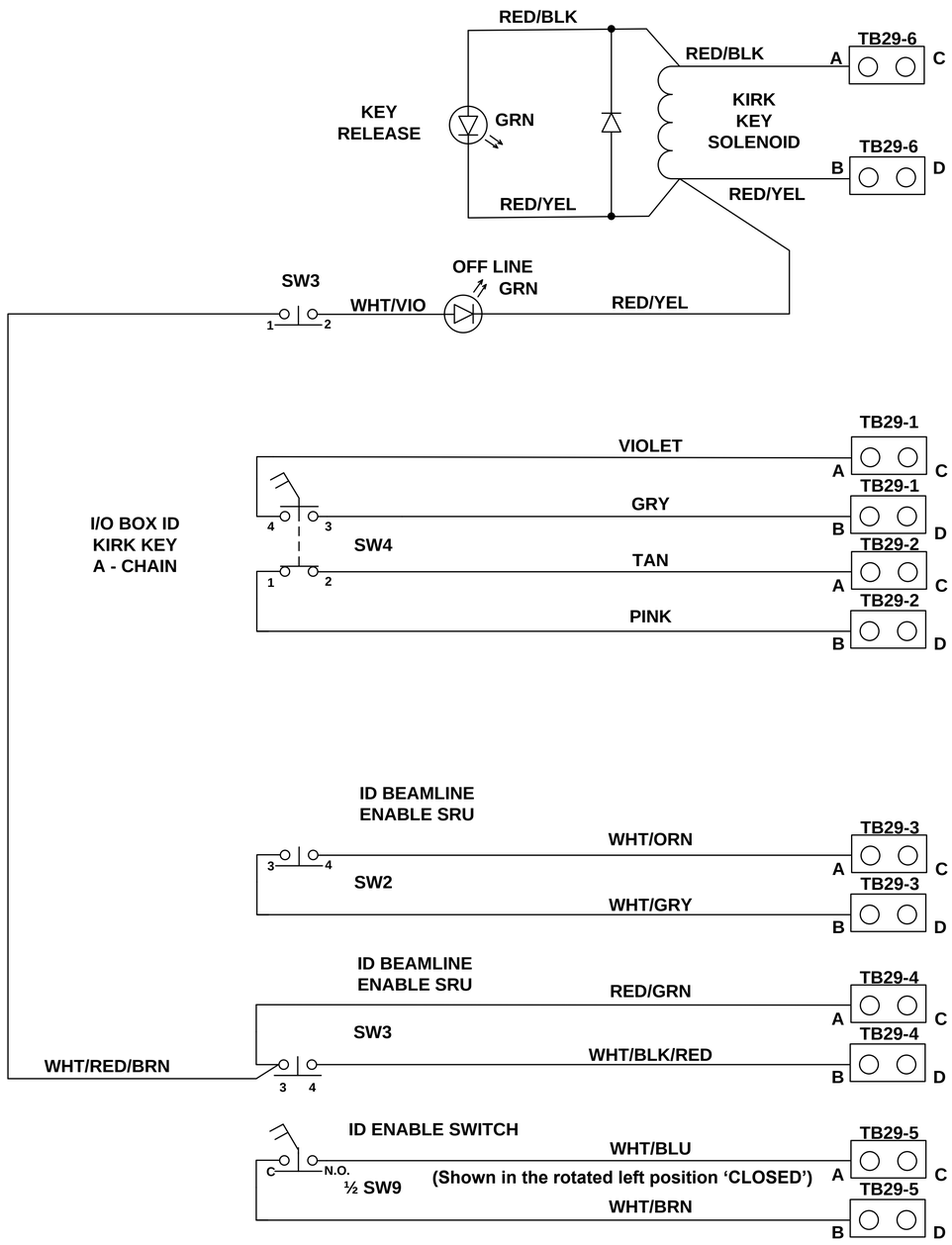

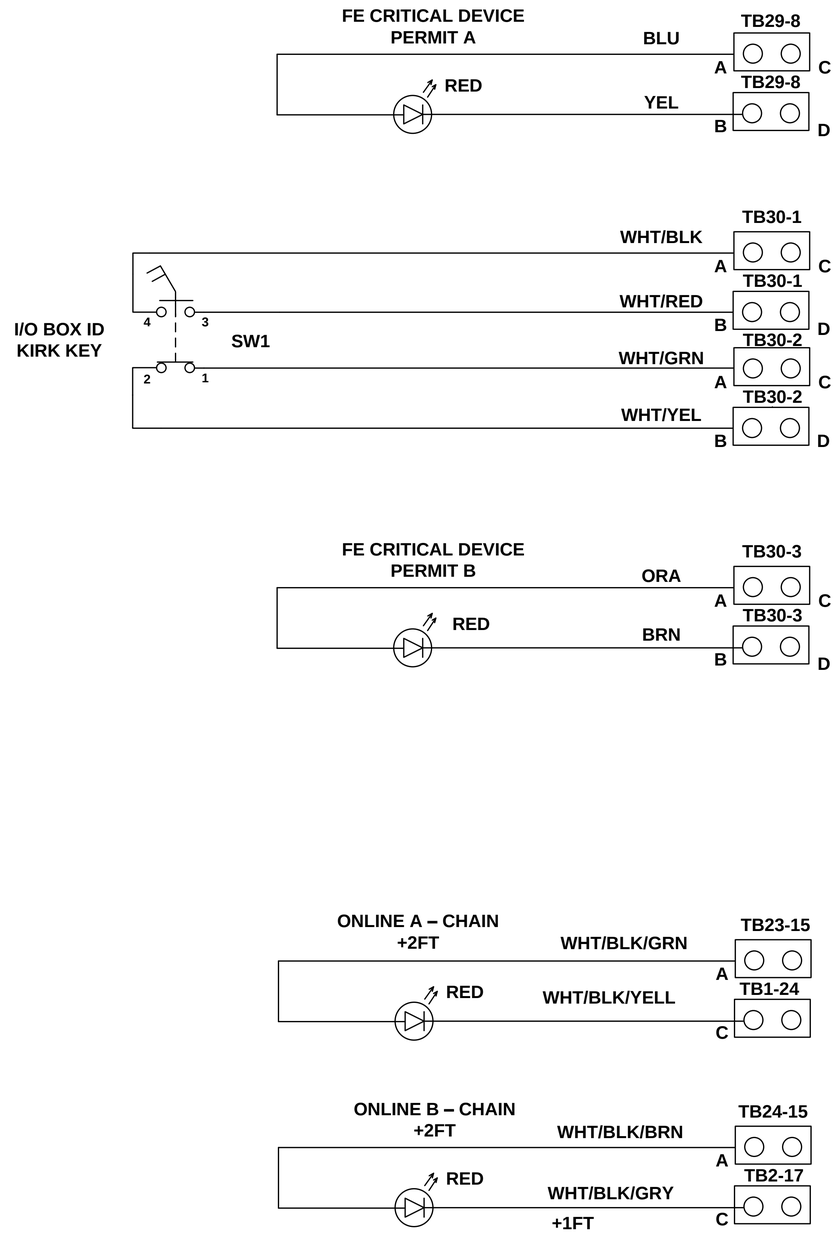

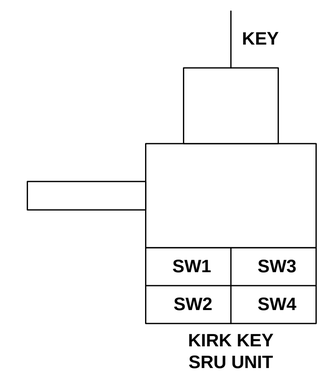

PIGTAIL
TB 29 A- CHAIN 46" LONG
TB30 B – CHAIN 36" LONG

BM ½ BEAMLINE ENABLE PANEL

LT-EL-SR-EI DRAWING DIRECTORY	LT-EL-SR-EI-PPS-0207-90 DRAWING NUMBER	E REV
COMPUTER REPRODUCABLE	SCALE: N/A	SHEET 29 OF 61

LT-EL-SR-EI-PPS-0207-90

REV	DESCRIPTION	DATE	BY	CHECKED	APP
	SEE SHEET 1				

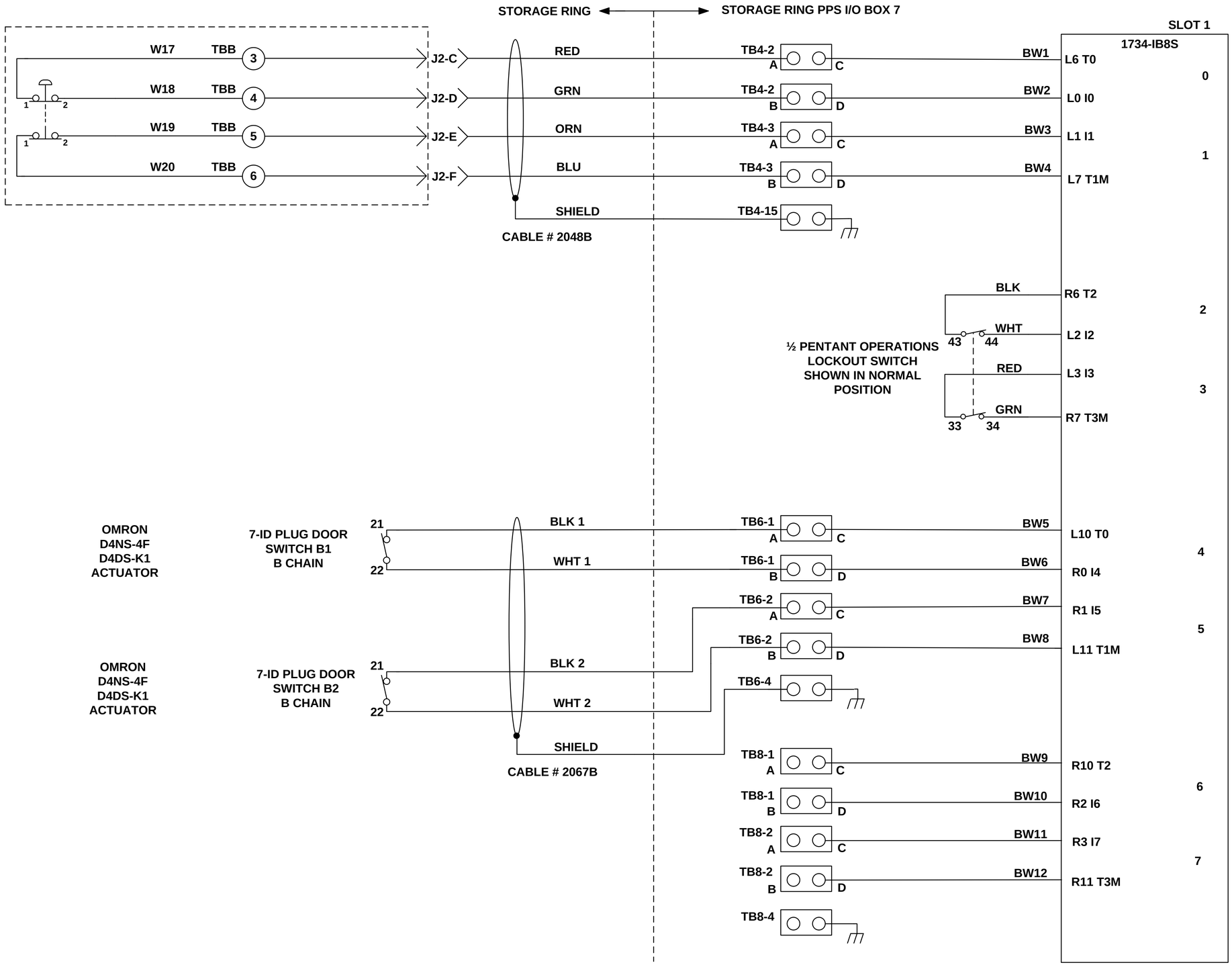

TO :
LT-ECN-017-1795
PAGE OF

COMMON GROUP

B

LT-EL-SR-EI-PPS-0207-90

LT-EL-SR-EI (DRAWING DIRECTORY)	LT-EL-SR-EI-PPS-0207-90 (DRAWING NUMBER)	E (REV)
COMPUTER REPRODUCABLE	SCALE: N/A	SHEET 30 OF 61

REV	DESCRIPTION	DATE	BY	CHECKED	APP
	SEE SHEET 1				

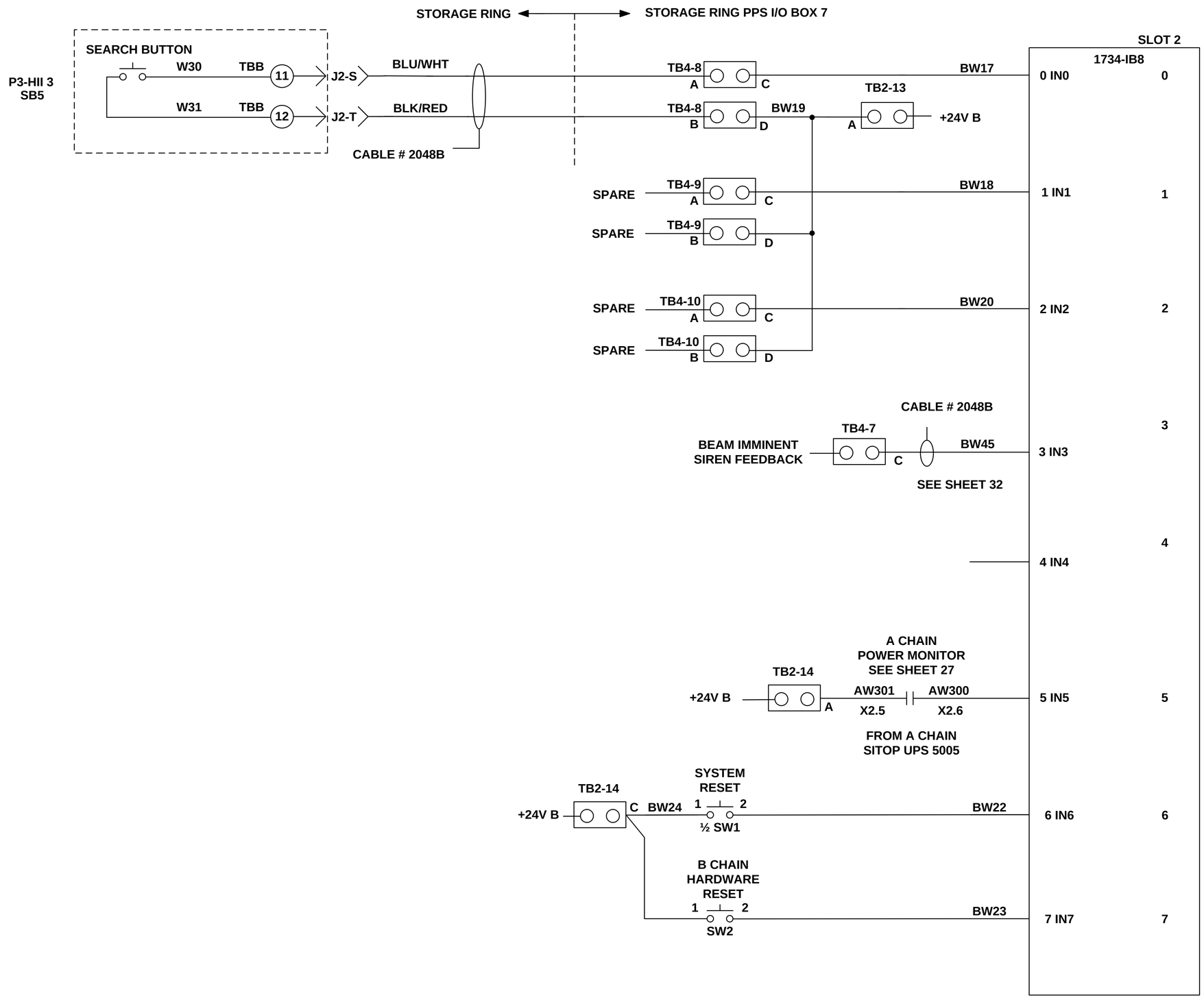

TO :
LT-ECN-017-1795
PAGE OF

COMMON GROUP

B

LT-EL-SR-EI-PPS-0207-90

LT-EL-SR-EI (DRAWING DIRECTORY)	LT-EL-SR-EI-PPS-0207-90 (DRAWING NUMBER)	E (REV)
COMPUTER REPRODUCABLE	SCALE: N/A	SHEET 31 OF 61

REV	DESCRIPTION	DATE	BY	CHECKED	APP
	SEE SHEET 1				

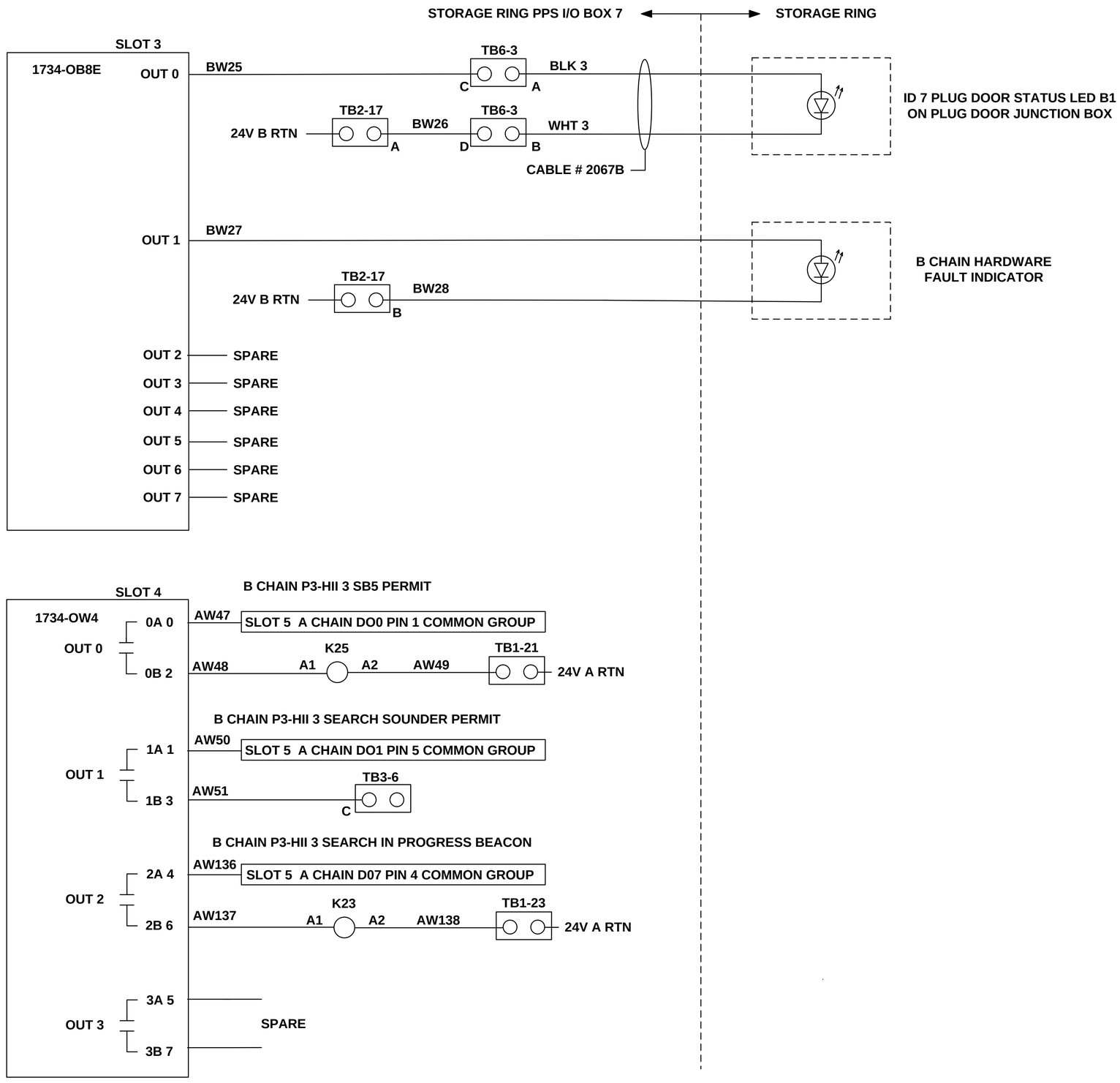

TO :
LT-ECN-017-1795
PAGE OF

COMMON GROUP

B

LT-EL-SR-EI-PPS-0207-90

LT-EL-SR-EI (DRAWING DIRECTORY)	LT-EL-SR-EI-PPS-0207-90 (DRAWING NUMBER)	E (REV)
COMPUTER REPRODUCABLE	SCALE: N/A	SHEET 32 OF 61

REV	DESCRIPTION	DATE	BY	CHECKED	APP
	SEE SHEET 1				

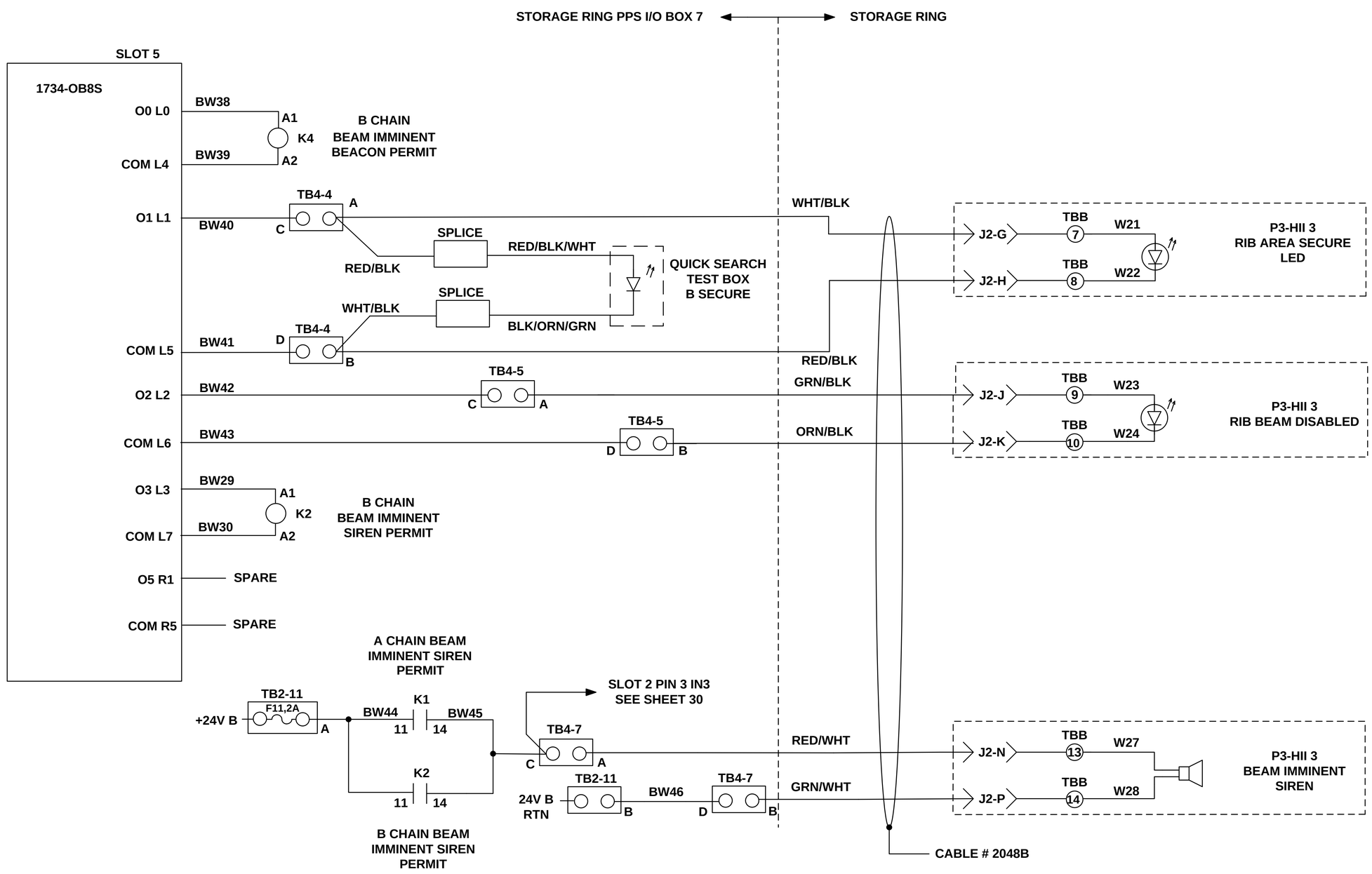

TO :
LT-ECN-017-1795
PAGE OF

COMMON GROUP

B

LT-EL-SR-EI (DRAWING DIRECTORY)	LT-EL-SR-EI-PPS-0207-90 (DRAWING NUMBER)	E (REV)
COMPUTER REPRODUCABLE	SCALE: N/A	SHEET 33 OF 61

LT-EL-SR-EI-PPS-0207-90

REV	DESCRIPTION	DATE	BY	CHECKED	APP
	SEE SHEET 1				

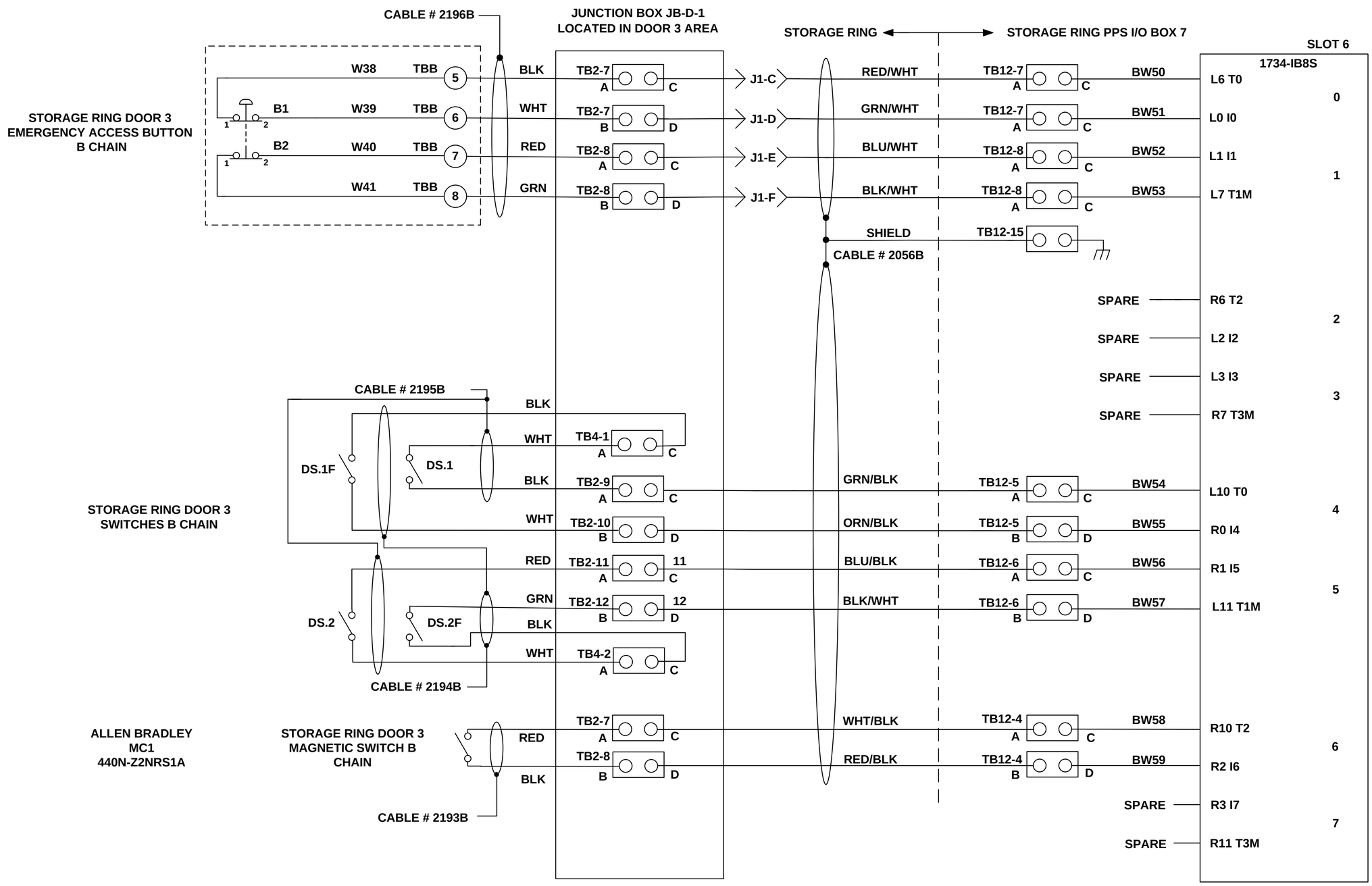

TO :
LT-ECN-017-1795
PAGE OF

GATE / LABYRINTH / GROUP
DOOR 3

B

LT-EL-SR-EI-PPS-0207-90

LT-EL-SR-EI (DRAWING DIRECTORY)	LT-EL-SR-EI-PPS-0207-90 (DRAWING NUMBER)	E (REV)
COMPUTER REPRODUCABLE	SCALE: N/A	SHEET 34 OF 61

REV	DESCRIPTION	DATE	BY	CHECKED	APP
	SEE SHEET 1				

TO :
LT-ECN-017-1795
PAGE OF

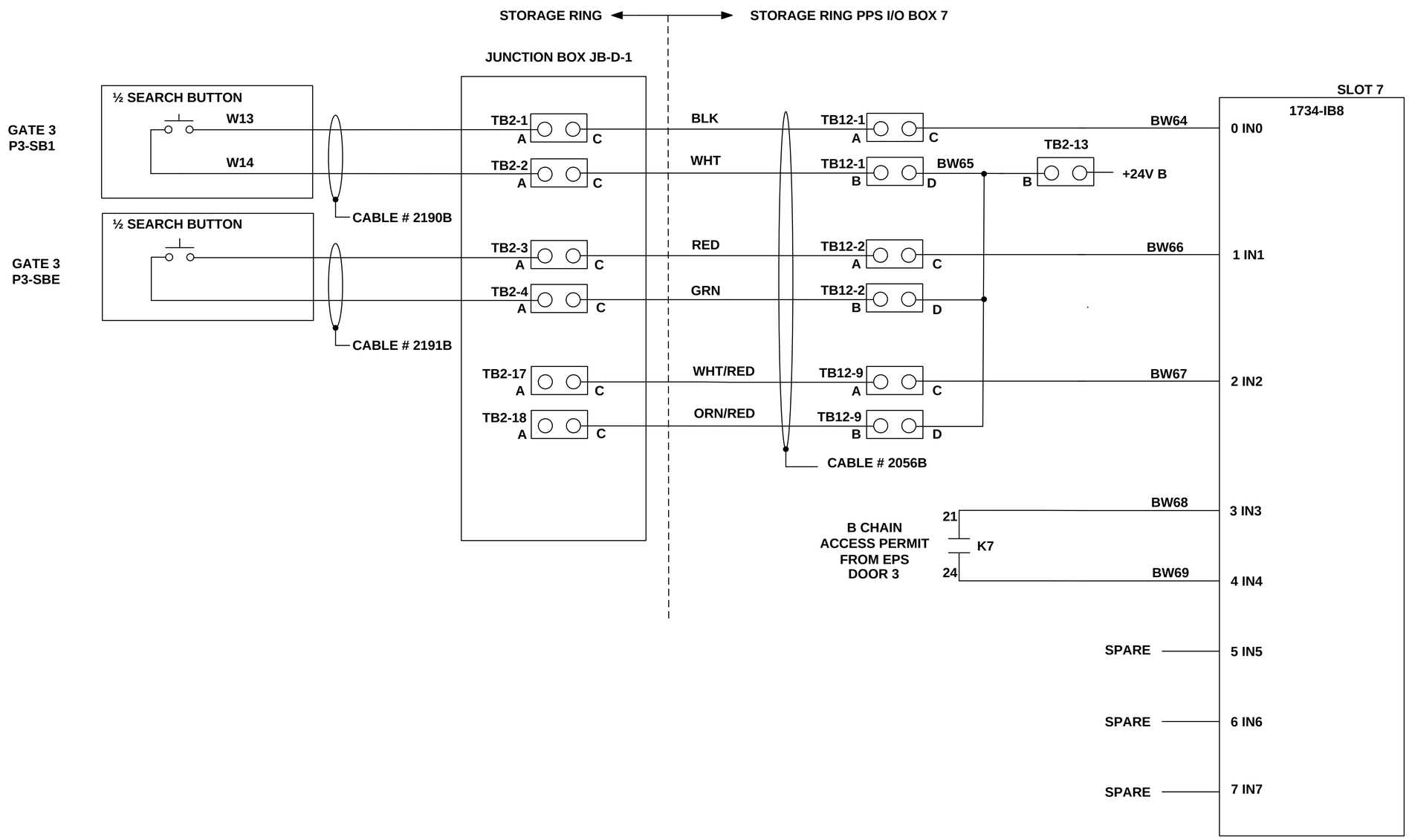

GATE / LABYRINTH / GROUP
DOOR 3

B

LT-EL-SR-EI (DRAWING DIRECTORY)	LT-EL-SR-EI-PPS-0207-90 (DRAWING NUMBER)	E (REV)
COMPUTER REPRODUCABLE	SCALE: N/A	SHEET 35 OF 61

LT-EL-SR-EI-PPS-0207-90

REV	DESCRIPTION	DATE	BY	CHECKED	APP
	SEE SHEET 1				

STORAGE RING PPS I/O BOX 7 ⟷ STORAGE RING

TO :
LT-ECN-017-1795
PAGE OF

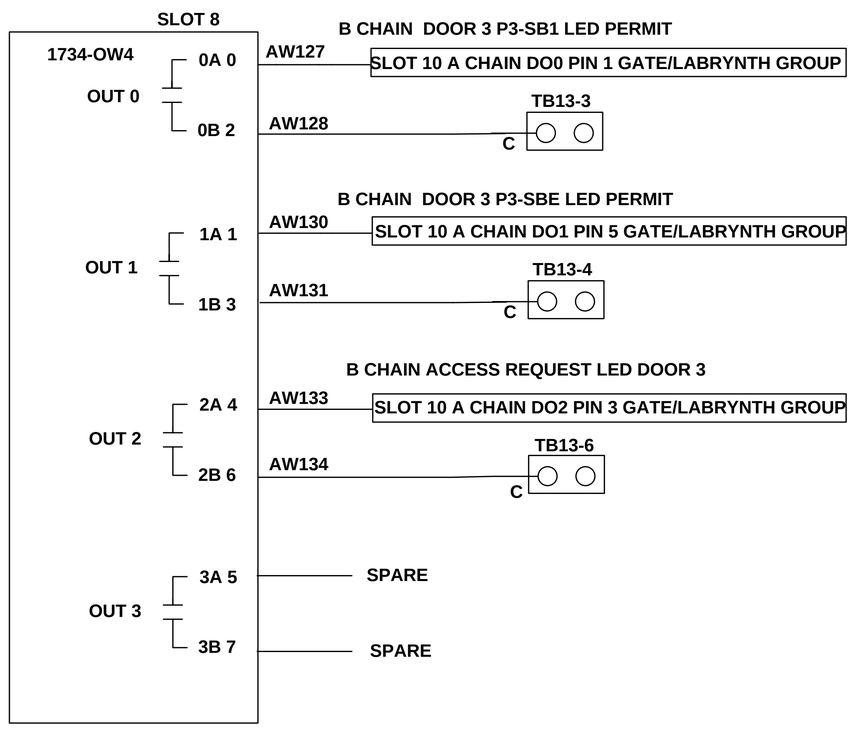

GATE / LABYRINTH / GROUP DOOR 3

B

LT-EL-SR-EI (DRAWING DIRECTORY)	LT-EL-SR-EI-PPS-0207-90 (DRAWING NUMBER)	E (REV)
COMPUTER REPRODUCABLE	SCALE: N/A	SHEET 36 OF 61

LT-EL-SR-EI-PPS-0207-90

REV	DESCRIPTION	DATE	BY	CHECKED	APP
	SEE SHEET 1				

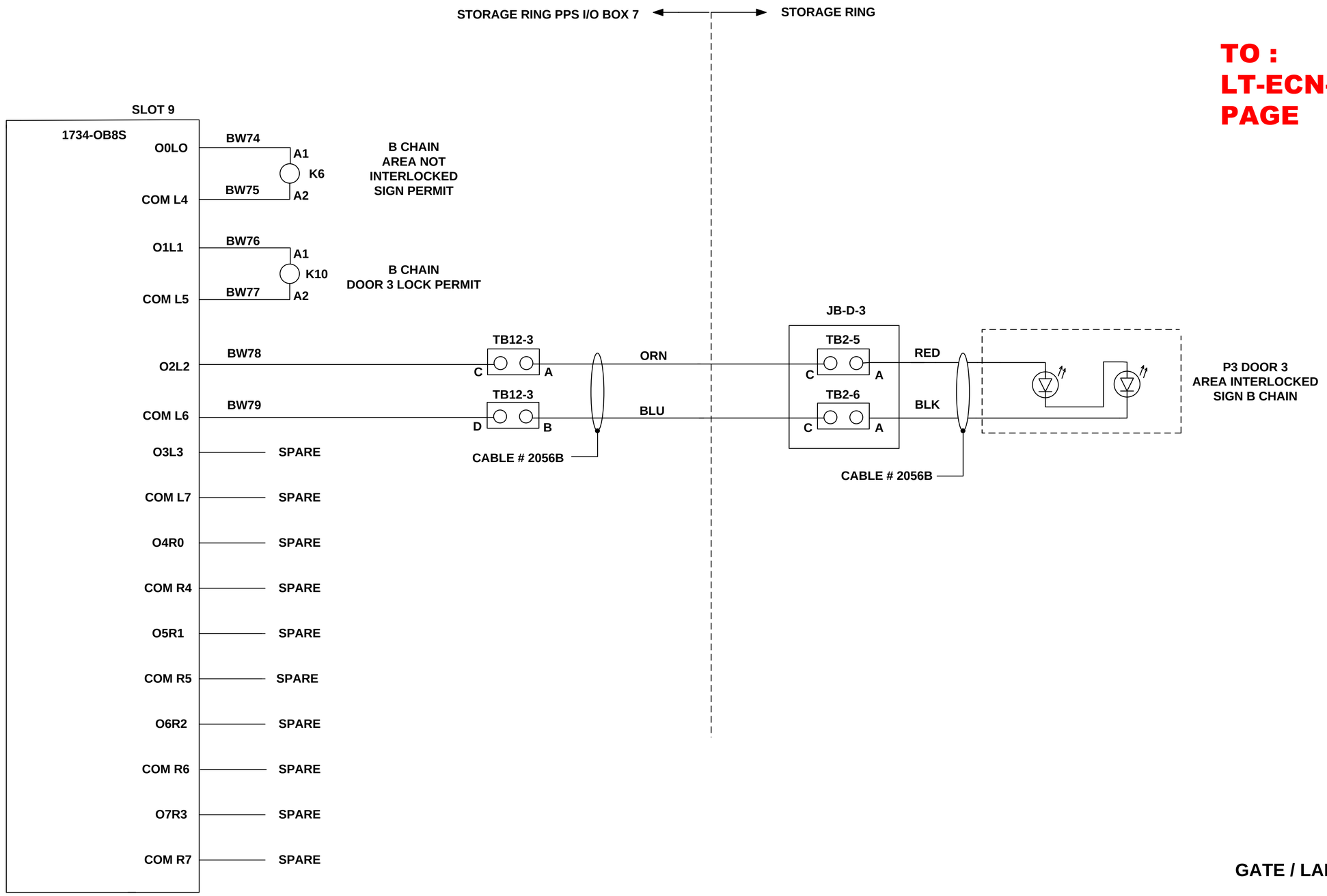

TO :
LT-ECN-017-1795
PAGE OF

GATE / LABYRINTH / GROUP
DOOR 3

B

LT-EL-SR-EI (DRAWING DIRECTORY)	LT-EL-SR-EI-PPS-0207-90 (DRAWING NUMBER)	E (REV)
COMPUTER REPRODUCABLE	SCALE: N/A	SHEET 37 OF 61

LT-EL-SR-EI-PPS-0207-90

REV	DESCRIPTION	DATE	BY	CHECKED	APP
	SEE SHEET 1				

TO :
LT-ECN-017-1795
PAGE OF

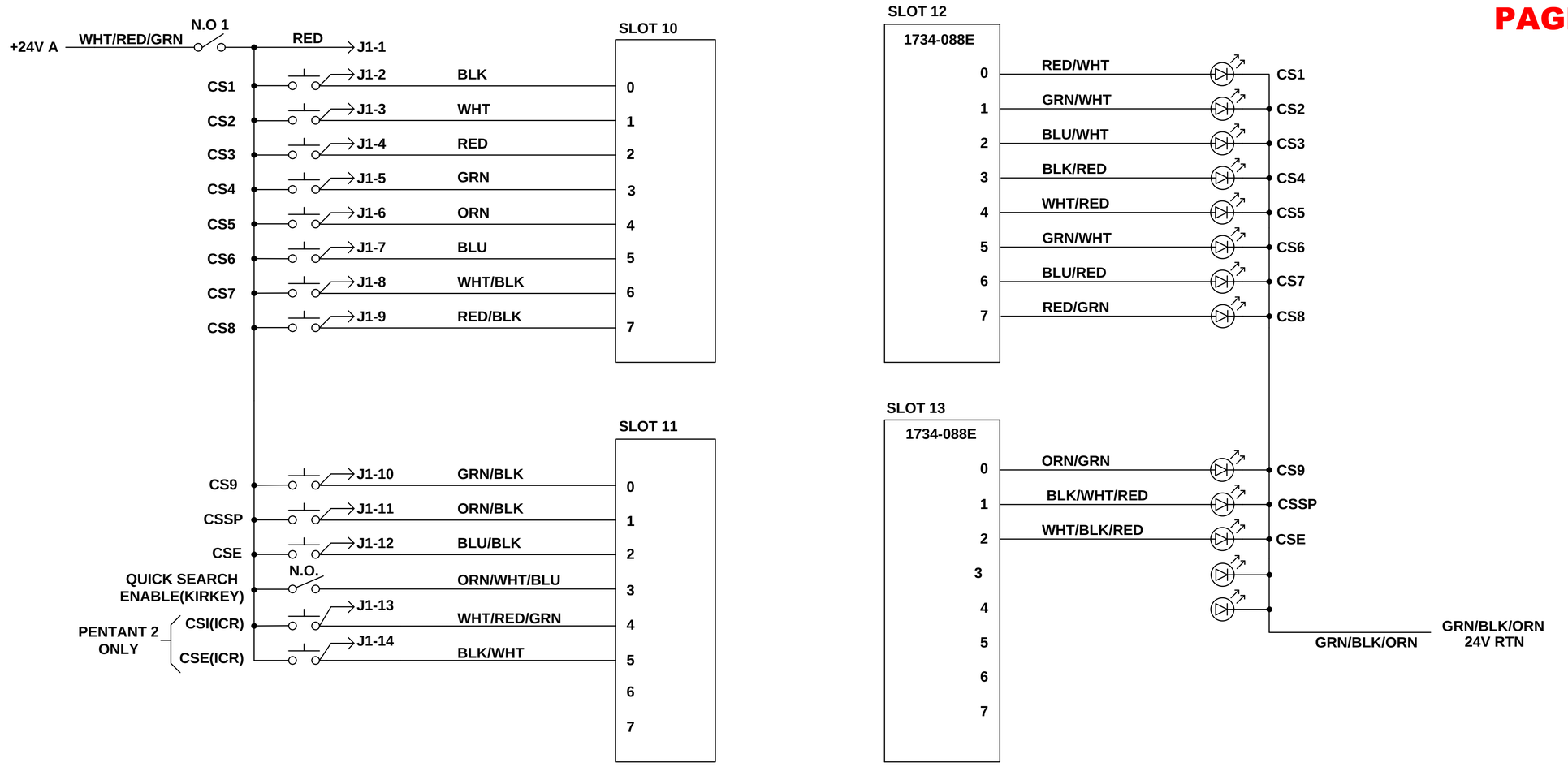

QUICK SEARCH
TEST BOX

COMMON GROUP

B

LT-EL-SR-EI (DRAWING DIRECTORY)	LT-EL-SR-EI-PPS-0207-90 (DRAWING NUMBER)	E (REV)
COMPUTER REPRODUCABLE	SCALE: N/A	SHEET 38 OF 61

LT-EL-SR-EI-PPS-0207-90

REV	DESCRIPTION	DATE	BY	CHECKED	APP
	SEE SHEET 1				

TO :
LT-ECN-017-1795
PAGE OF

SHEET LEFT BLANK
FOR FUTURE DATA

LT-EL-SR-EI-PPS-0207-90

LT-EL-SR-EI DRAWING DIRECTORY	LT-EL-SR-EI-PPS-0207-90 DRAWING NUMBER	E REV
COMPUTER REPRODUCABLE	SCALE: N/A	SHEET 39 OF 61

REV	DESCRIPTION	DATE	BY	CHECKED	APP
	SEE SHEET 1				

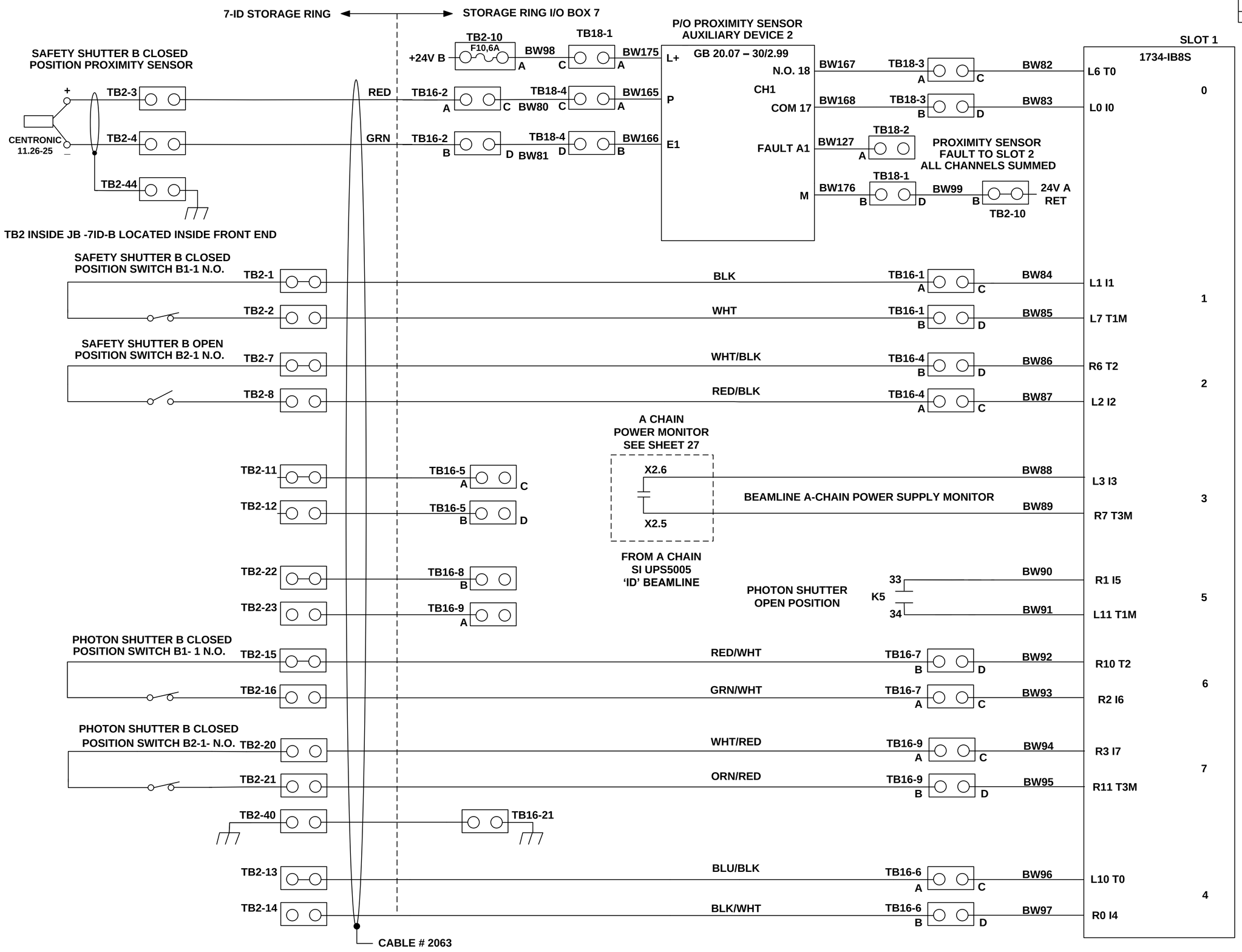

TO :
LT-ECN-017-1795
PAGE OF

ID BEAMLINE GROUP

7-ID

B

LT-EL-SR-EI (DRAWING DIRECTORY)	LT-EL-SR-EI-PPS-0207-90 (DRAWING NUMBER)	E (REV)
COMPUTER REPRODUCABLE	SCALE: N/A	SHEET 40 OF 61

LT-EL-SR-EI-PPS-0207-90

REV	DESCRIPTION	DATE	BY	CHECKED	APP
	SEE SHEET 1				

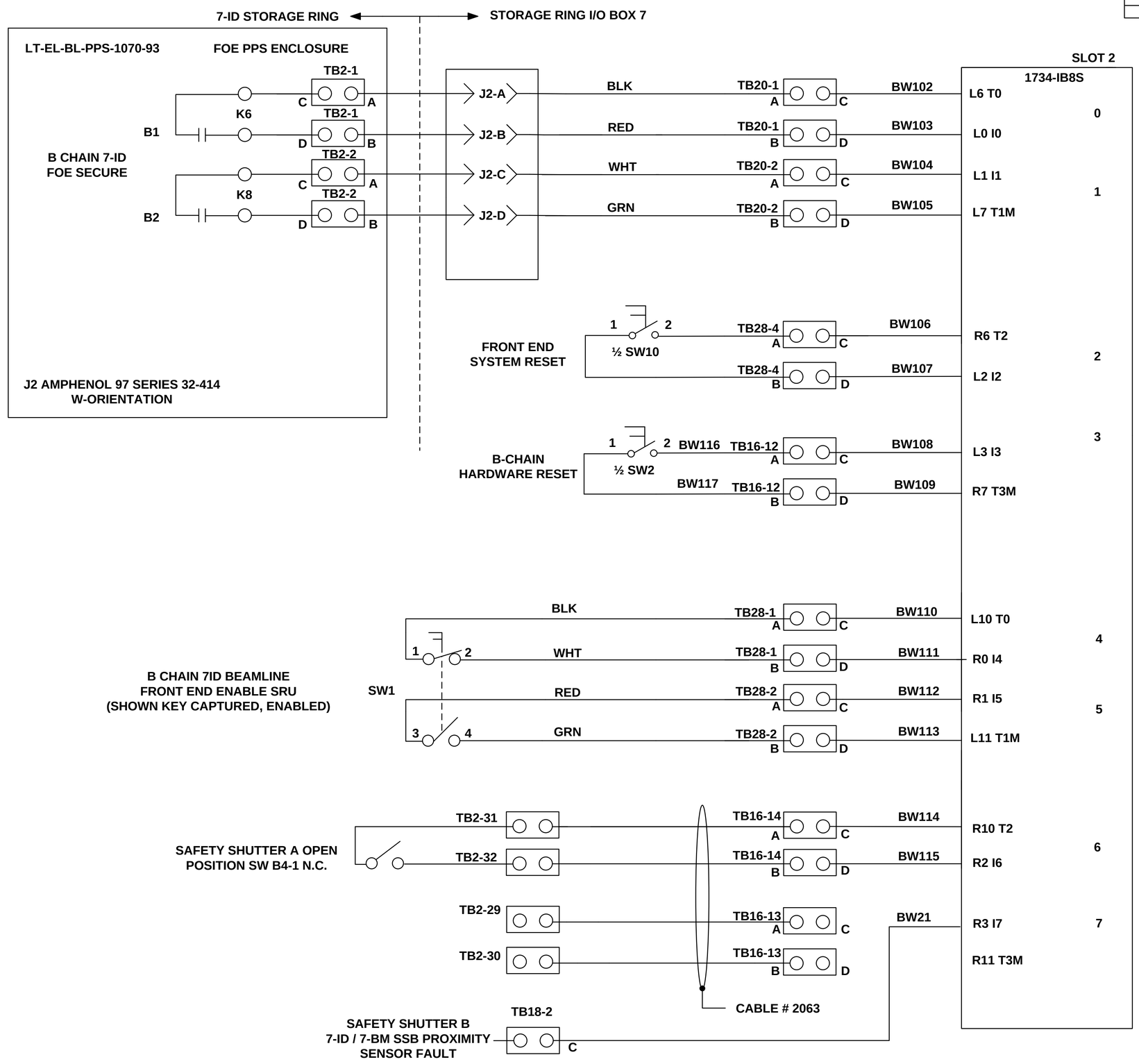

TO :
LT-ECN-017-1795
PAGE OF

ID BEAMLINE GROUP
7-ID
B

LT-EL-SR-EI-PPS-0207-90

LT-EL-SR-EI (DRAWING DIRECTORY)	LT-EL-SR-EI-PPS-0207-90 (DRAWING NUMBER)	E (REV)
COMPUTER REPRODUCABLE	SCALE: N/A	SHEET 41 OF 61

REV	DESCRIPTION	DATE	BY	CHECKED	APP
	SEE SHEET 1				

TO :
LT-ECN-017-1795
PAGE OF

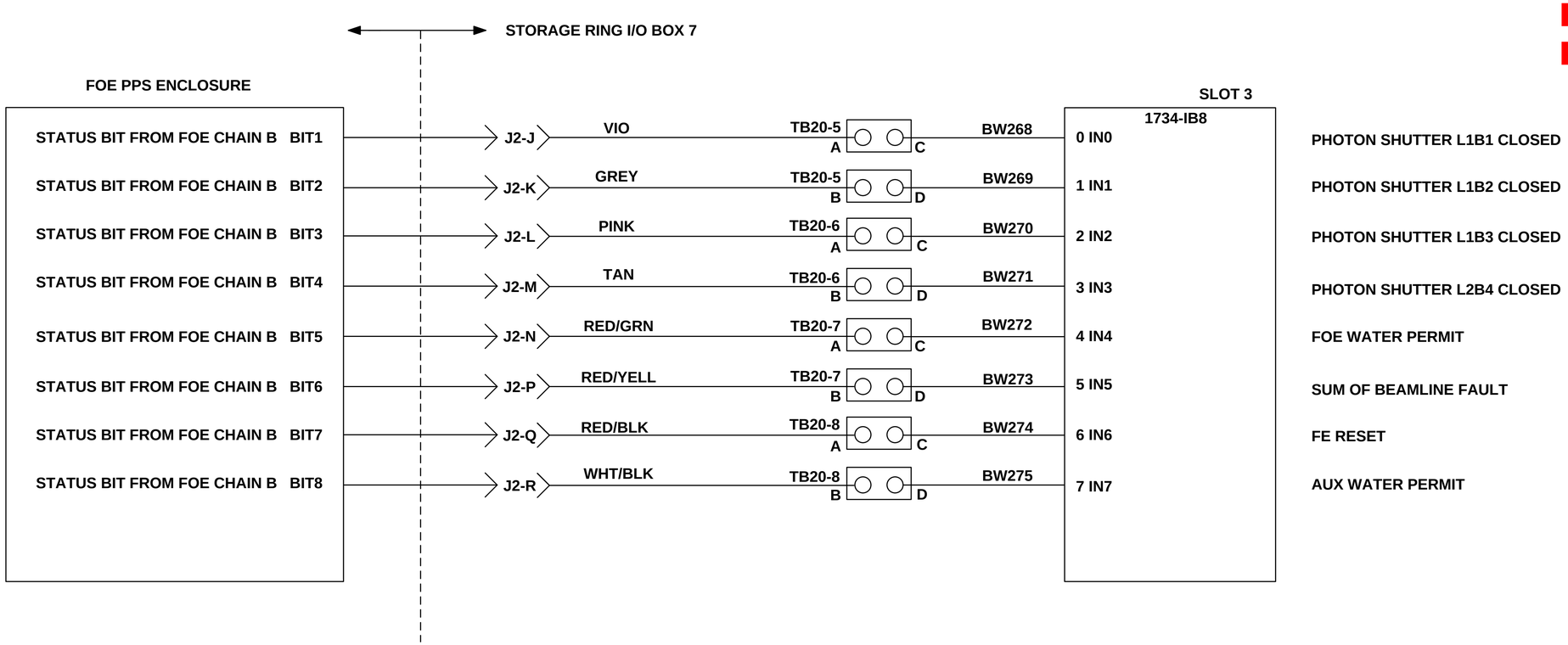

ID BEAMLINE GROUP

7-ID

B

LT-EL-SR-EI-PPS-0207-90

LT-EL-SR-EI (DRAWING DIRECTORY)	LT-EL-SR-EI-PPS-0207-90 (DRAWING NUMBER)	E (REV)
COMPUTER REPRODUCABLE	SCALE: N/A	SHEET 42 OF 61

REV	DESCRIPTION	DATE	BY	CHECKED	APP
	SEE SHEET 1				

TO :
LT-ECN-017-1795
PAGE OF

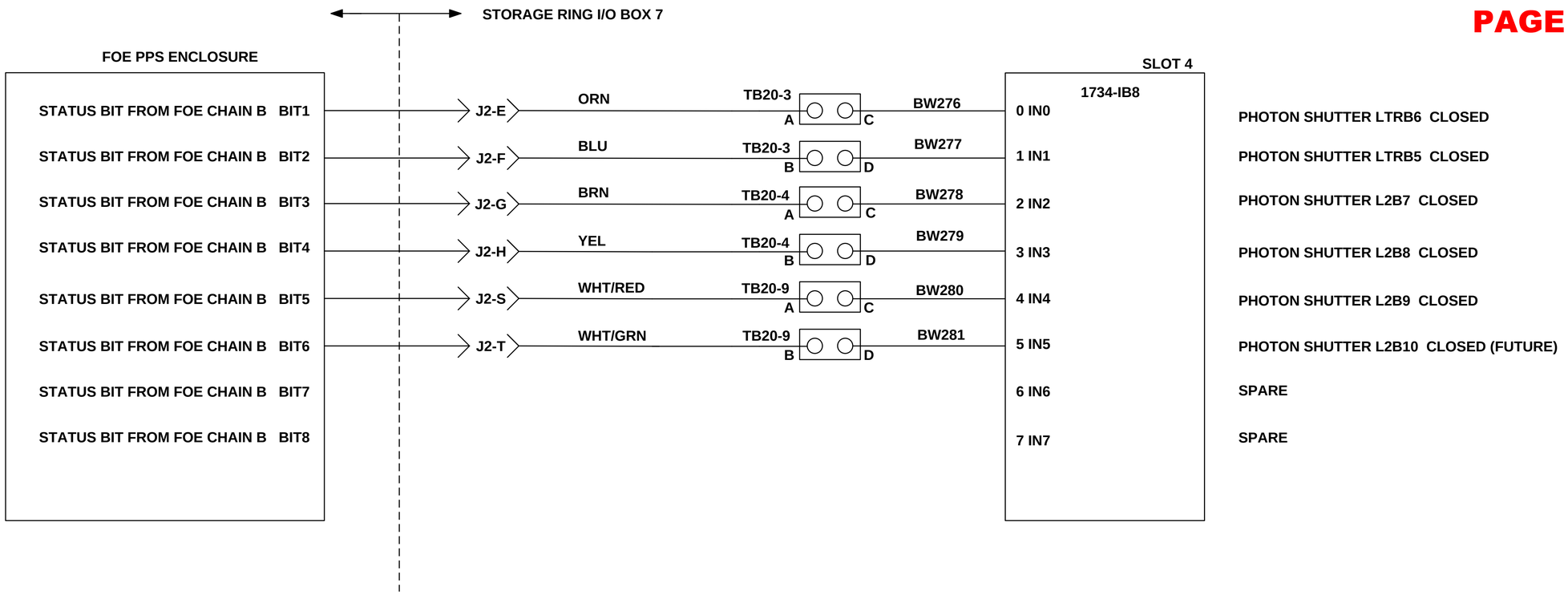

ID BEAMLINE GROUP

7-ID

B

LT-EL-SR-EI (DRAWING DIRECTORY)	LT-EL-SR-EI-PPS-0207-90 (DRAWING NUMBER)	E (REV)
COMPUTER REPRODUCABLE	SCALE: N/A	SHEET 43 OF 61

LT-EL-SR-EI-PPS-0207-90

REV	DESCRIPTION	DATE	BY	CHECKED	APP
	SEE SHEET 1				

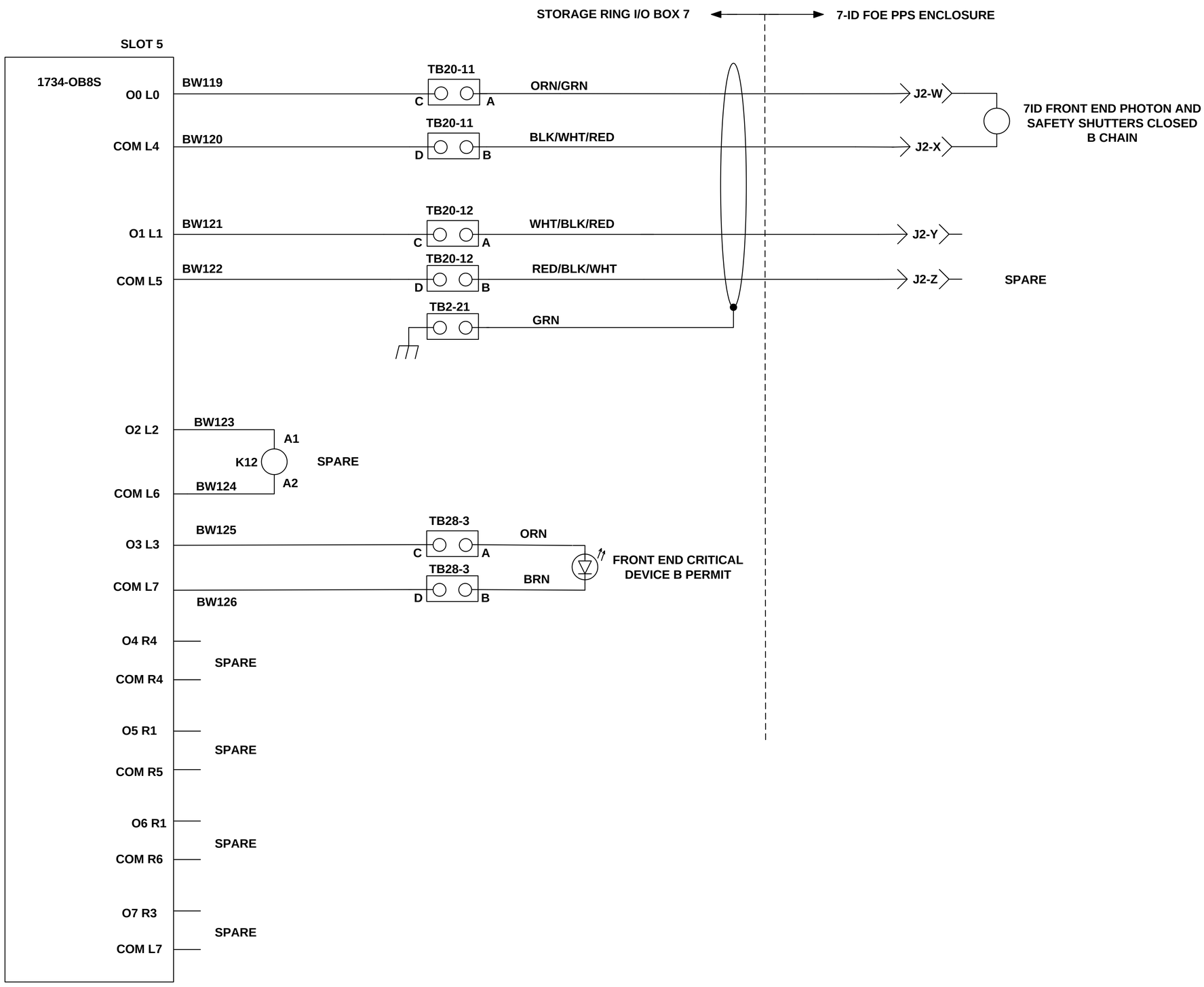

TO :
LT-ECN-017-1795
PAGE OF

ID BEAMLINE GROUP
7-ID
B

LT-EL-SR-EI-PPS-0207-90

LT-EL-SR-EI (DRAWING DIRECTORY)	LT-EL-SR-EI-PPS-0207-90 (DRAWING NUMBER)	E (REV)
COMPUTER REPRODUCABLE	SCALE: N/A	SHEET 44 OF 61

REV	DESCRIPTION	DATE	BY	CHECKED	APP
	SEE SHEET 1				

TO :
LT-ECN-017-1795
PAGE OF

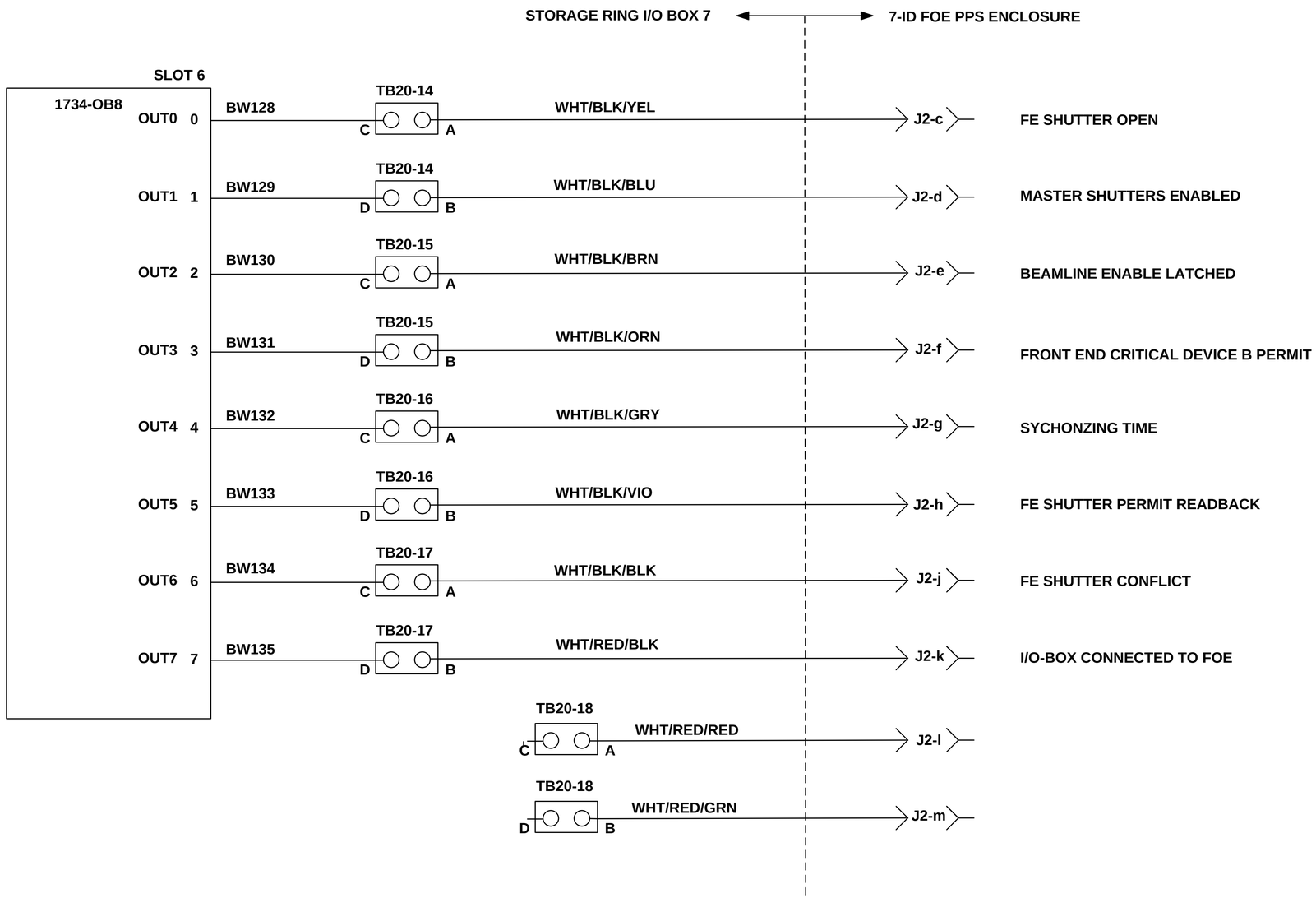

ID BEAMLINE GROUP

7-ID

B

LT-EL-SR-EI-PPS-0207-90

LT-EL-SR-EI (DRAWING DIRECTORY)	LT-EL-SR-EI-PPS-0207-90 (DRAWING NUMBER)	E (REV)
COMPUTER REPRODUCABLE	SCALE: N/A	SHEET 45 OF 61

REV	DESCRIPTION	DATE	BY	CHECKED	APP
	SEE SHEET 1				

TO :
LT-ECN-017-1795
PAGE OF

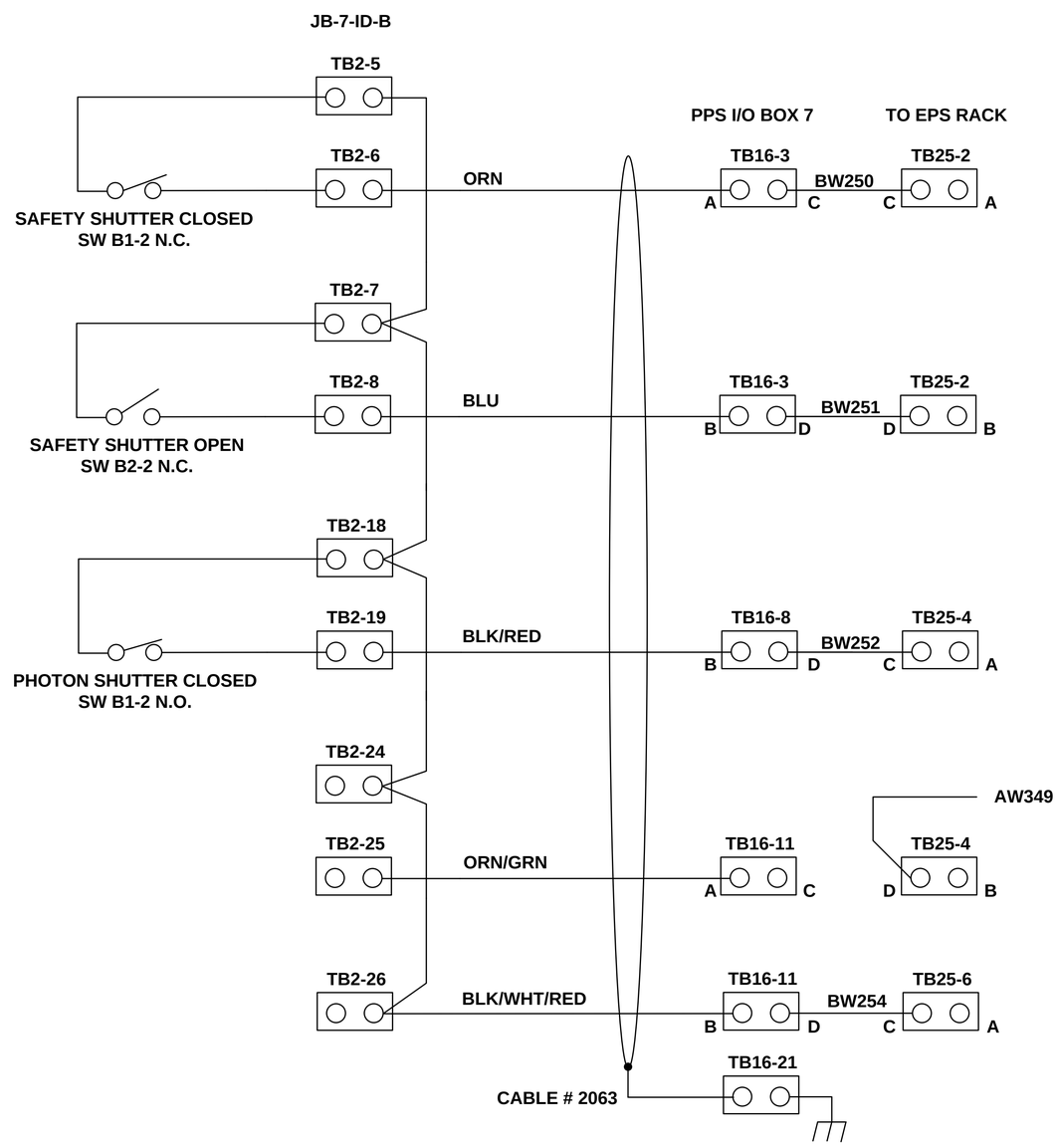

ID BEAMLINE GROUP

7-ID

B

LT-EL-SR-EI (DRAWING DIRECTORY)	LT-EL-SR-EI-PPS-0207-90 (DRAWING NUMBER)	E (REV)
COMPUTER REPRODUCABLE	SCALE: N/A	SHEET 46 OF 61

LT-EL-SR-EI-PPS-0207-90

REV	DESCRIPTION	DATE	BY	CHECKED	APP
	SEE SHEET 1				

TO :
LT-ECN-017-1795
PAGE OF

SHEET LEFT BLANK
FOR FUTURE DATA

LT-EL-SR-EI-PPS-0207-90

LT-EL-SR-EI (DRAWING DIRECTORY)	LT-EL-SR-EI-PPS-0207-90 (DRAWING NUMBER)	E (REV)
COMPUTER REPRODUCABLE	SCALE: N/A	SHEET 47 OF 61

REV	DESCRIPTION	DATE	BY	CHECKED	APP
	SEE SHEET 1				

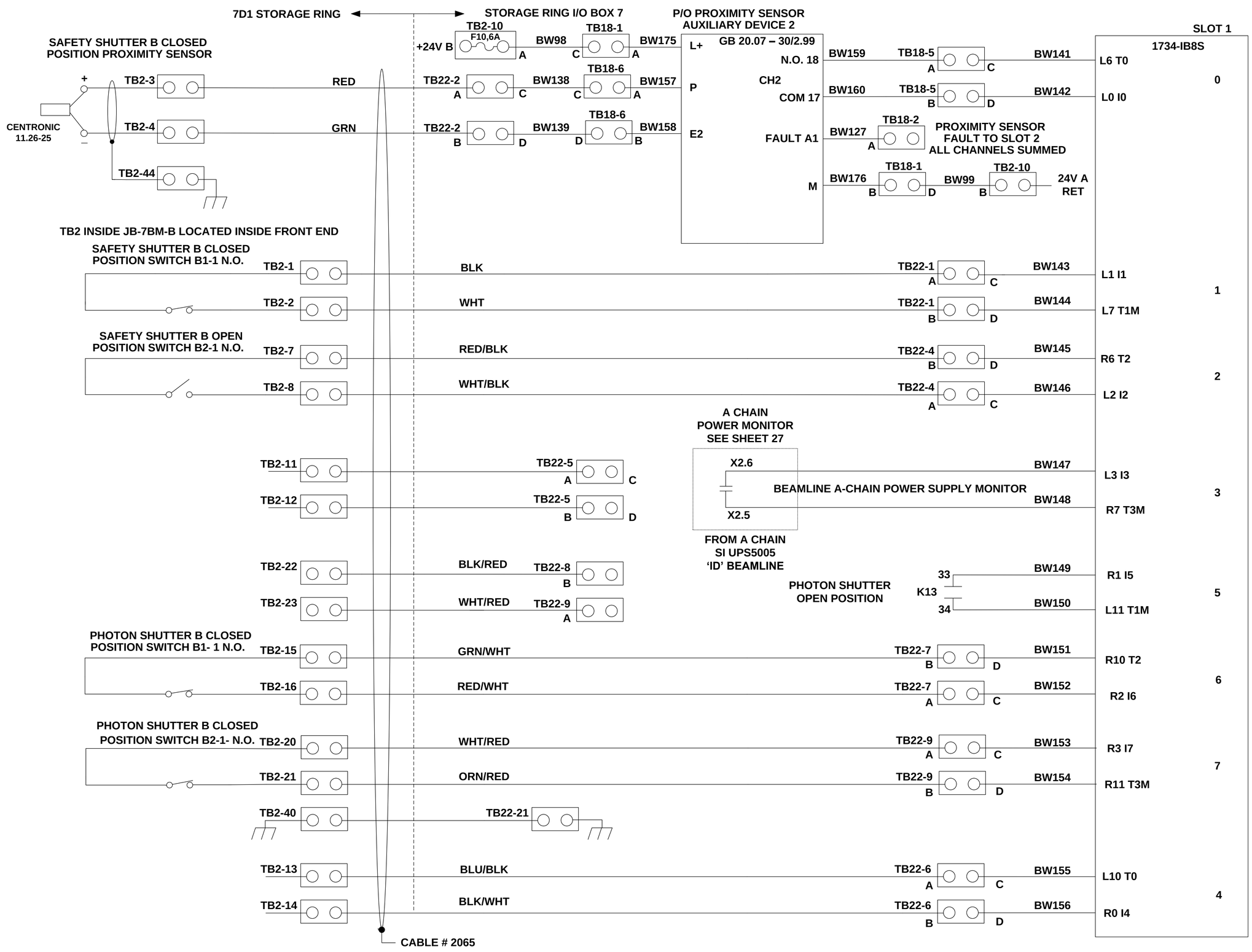

TO :
LT-ECN-017-1795
PAGE OF

BM BEAMLINE GROUP
7-BM
B

LT-EL-SR-EI-PPS-0207-90

LT-EL-SR-EI (DRAWING DIRECTORY)	LT-EL-SR-EI-PPS-0207-90 (DRAWING NUMBER)	E (REV)
COMPUTER REPRODUCABLE	SCALE: N/A	SHEET 48 OF 61

REV	DESCRIPTION	DATE	BY	CHECKED	APP
	SEE SHEET 1				

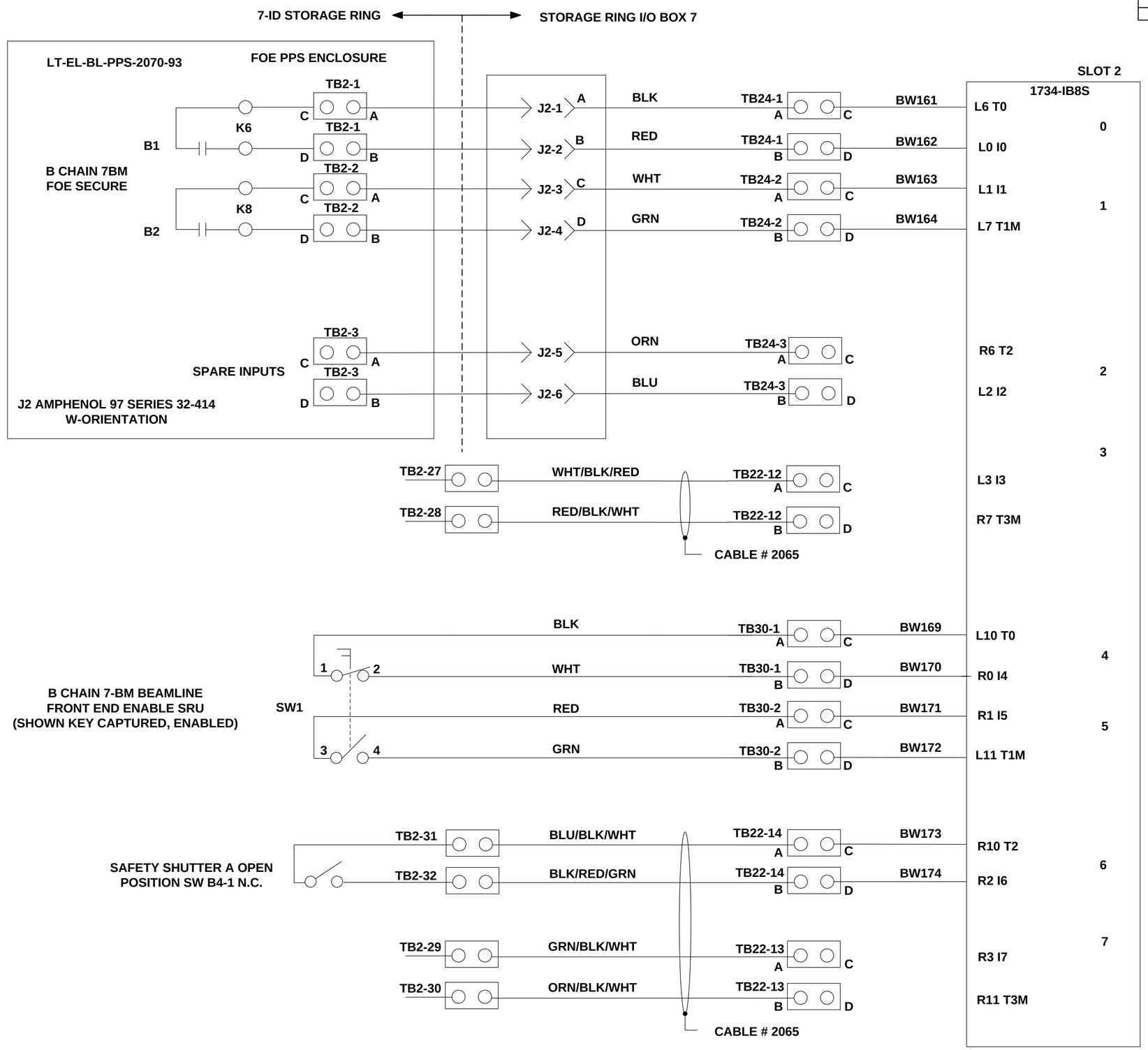

TO :
LT-ECN-017-1795
PAGE OF

BM BEAMLINE GROUP
7-BM
B

LT-EL-SR-EI-PPS-0207-90

LT-EL-SR-EI (DRAWING DIRECTORY)	LT-EL-SR-EI-PPS-0207-90 (DRAWING NUMBER)	E (REV)
COMPUTER REPRODUCABLE	SCALE: N/A	SHEET 49 OF 61

REV	DESCRIPTION	DATE	BY	CHECKED	APP
	SEE SHEET 1				

TO :
LT-ECN-017-1795
PAGE OF

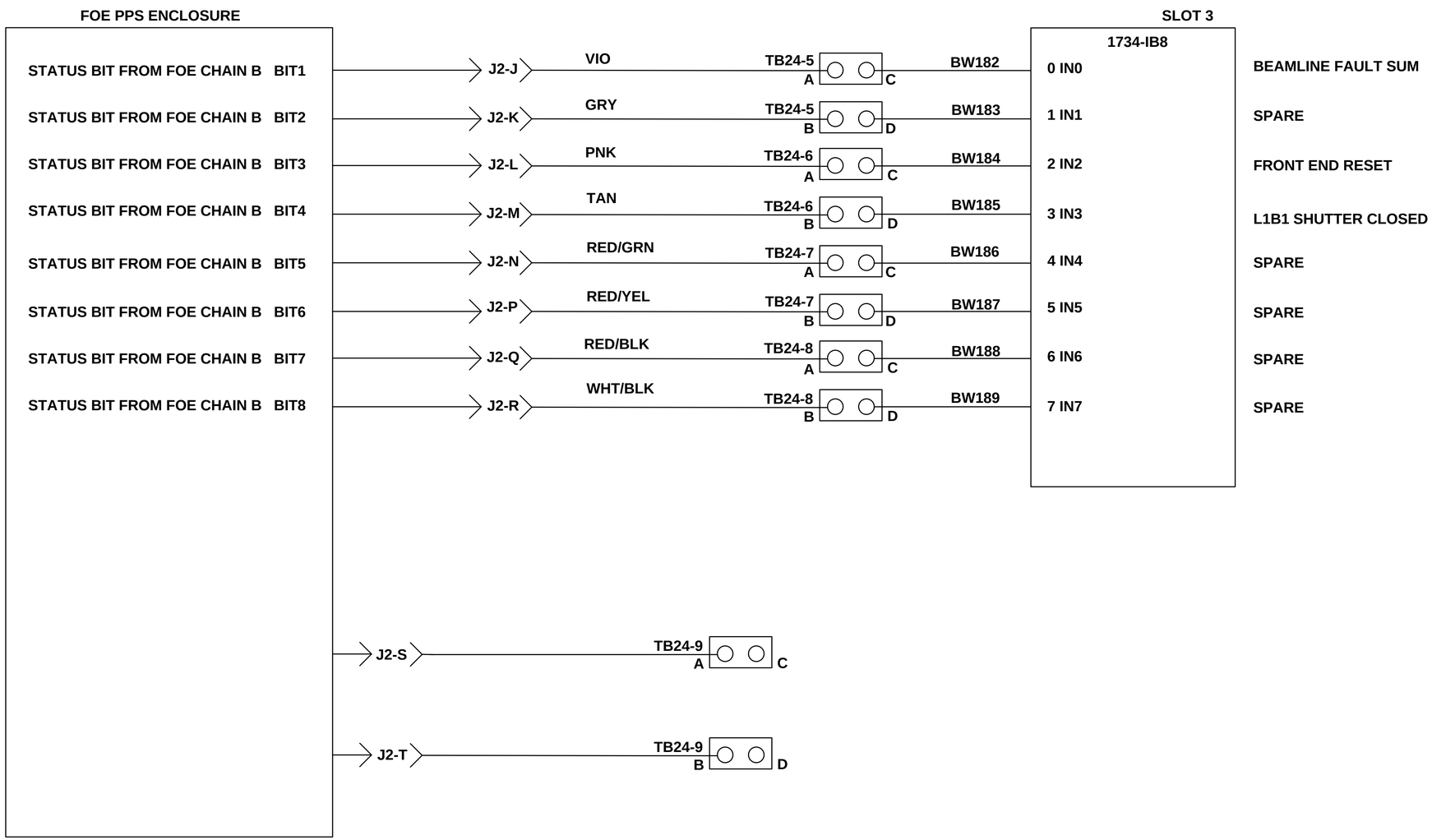

BM BEAMLINE GROUP
7-BM
B

LT-EL-SR-EI (DRAWING DIRECTORY)	LT-EL-SR-EI-PPS-0207-90 (DRAWING NUMBER)	E (REV)
COMPUTER REPRODUCABLE	SCALE: N/A	SHEET 50 OF 61

LT-EL-SR-EI-PPS-0207-90

REV	DESCRIPTION	DATE	BY	CHECKED	APP
	SEE SHEET 1				

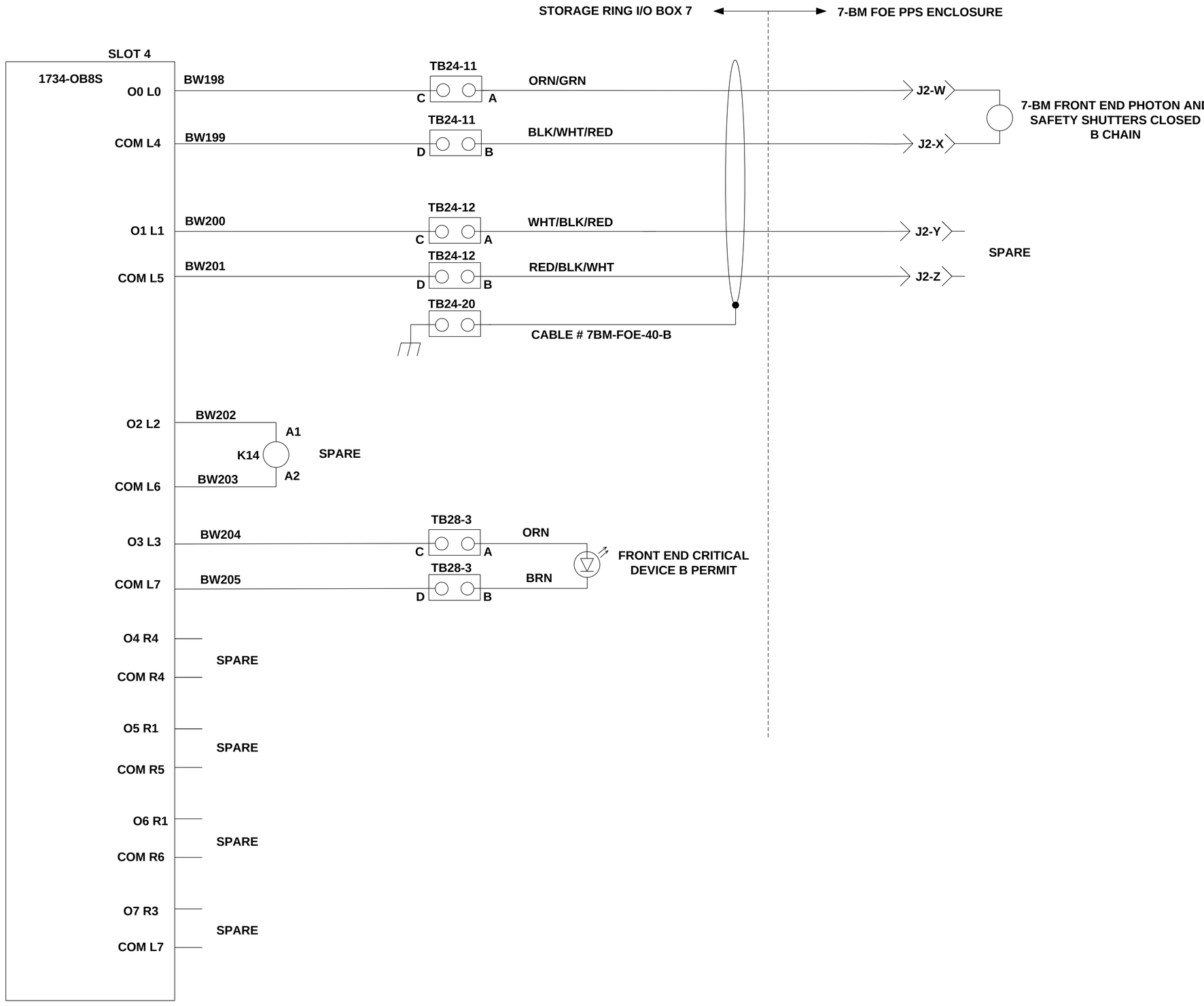

TO :
LT-ECN-017-1795
PAGE OF

BM BEAMLINE GROUP

7-BM

B

LT-EL-SR-EI (DRAWING DIRECTORY)	LT-EL-SR-EI-PPS-0207-90 (DRAWING NUMBER)	E (REV)
COMPUTER REPRODUCABLE	SCALE: N/A	SHEET 51 OF 61

LT-EL-SR-EI-PPS-0207-90

REV	DESCRIPTION	DATE	BY	CHECKED	APP
	SEE SHEET 1				

TO :
LT-ECN-017-1795
PAGE OF

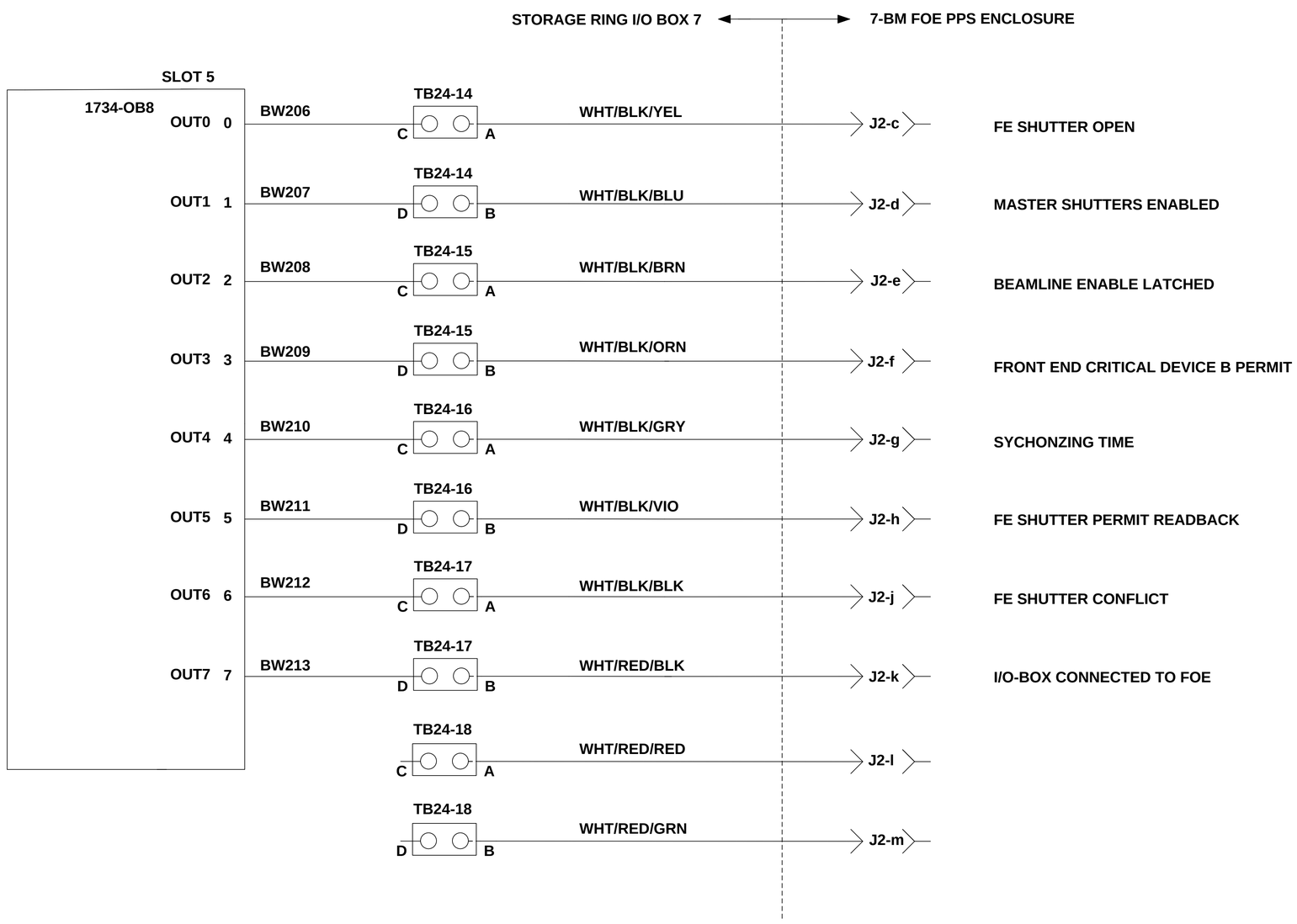

BM BEAMLINE GROUP

7-BM

B

LT-EL-SR-EI (DRAWING DIRECTORY)	LT-EL-SR-EI-PPS-0207-90 (DRAWING NUMBER)	E (REV)
COMPUTER REPRODUCABLE	SCALE: N/A	SHEET 52 OF 61

LT-EL-SR-EI-PPS-0207-90

REV	DESCRIPTION	DATE	BY	CHECKED	APP
	SEE SHEET 1				

TO :
LT-ECN-017-1795
PAGE OF

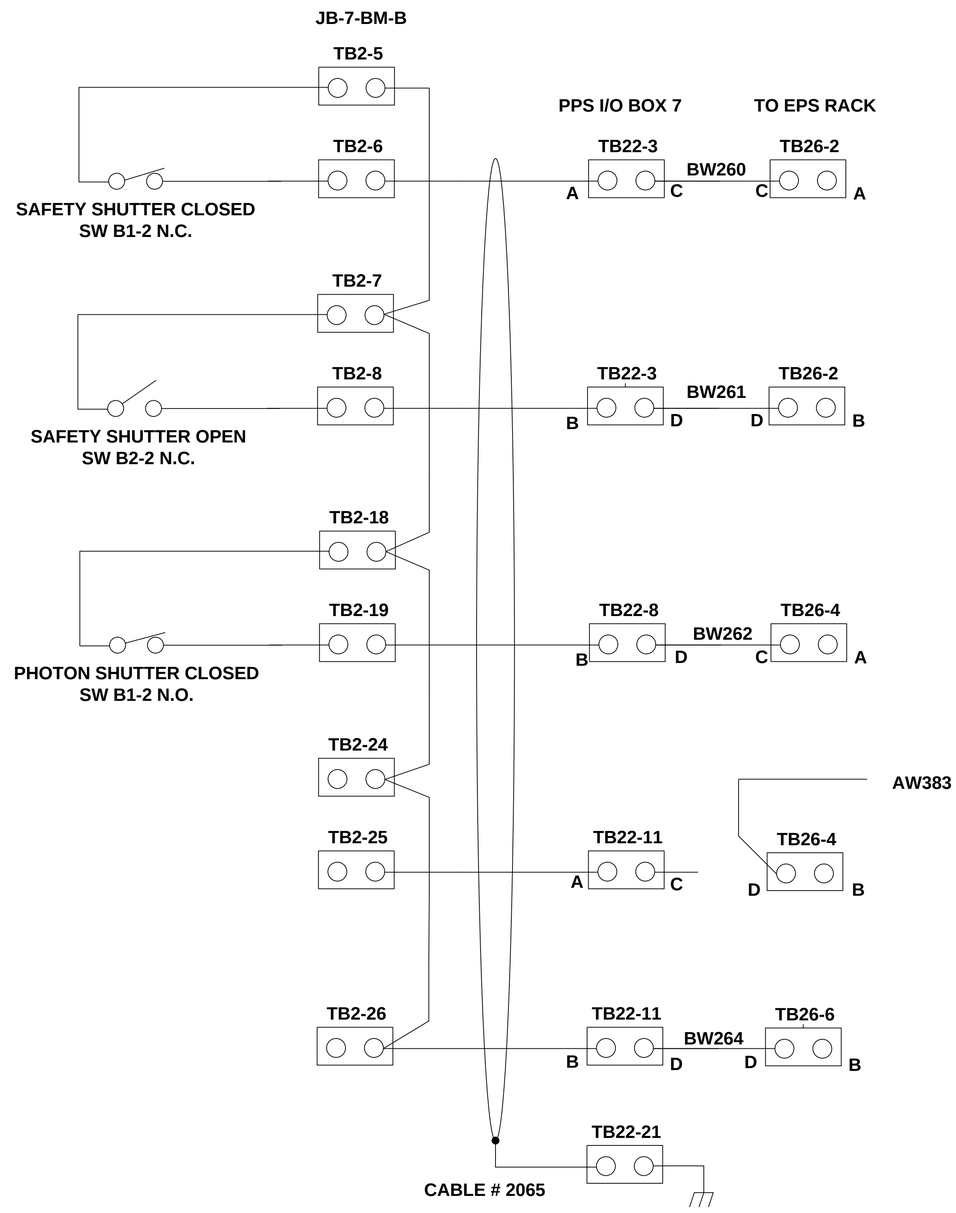

BM BEAMLINE GROUP

7-BM

B

LT-EL-SR-EI DRAWING DIRECTORY	LT-EL-SR-EI-PPS-0207-90 DRAWING NUMBER	E REV
COMPUTER REPRODUCABLE	SCALE: N/A	SHEET 53 OF 61

LT-EL-SR-EI-PPS-0207-90

REV	DESCRIPTION	DATE	BY	CHECKED	APP
	SEE SHEET 1				

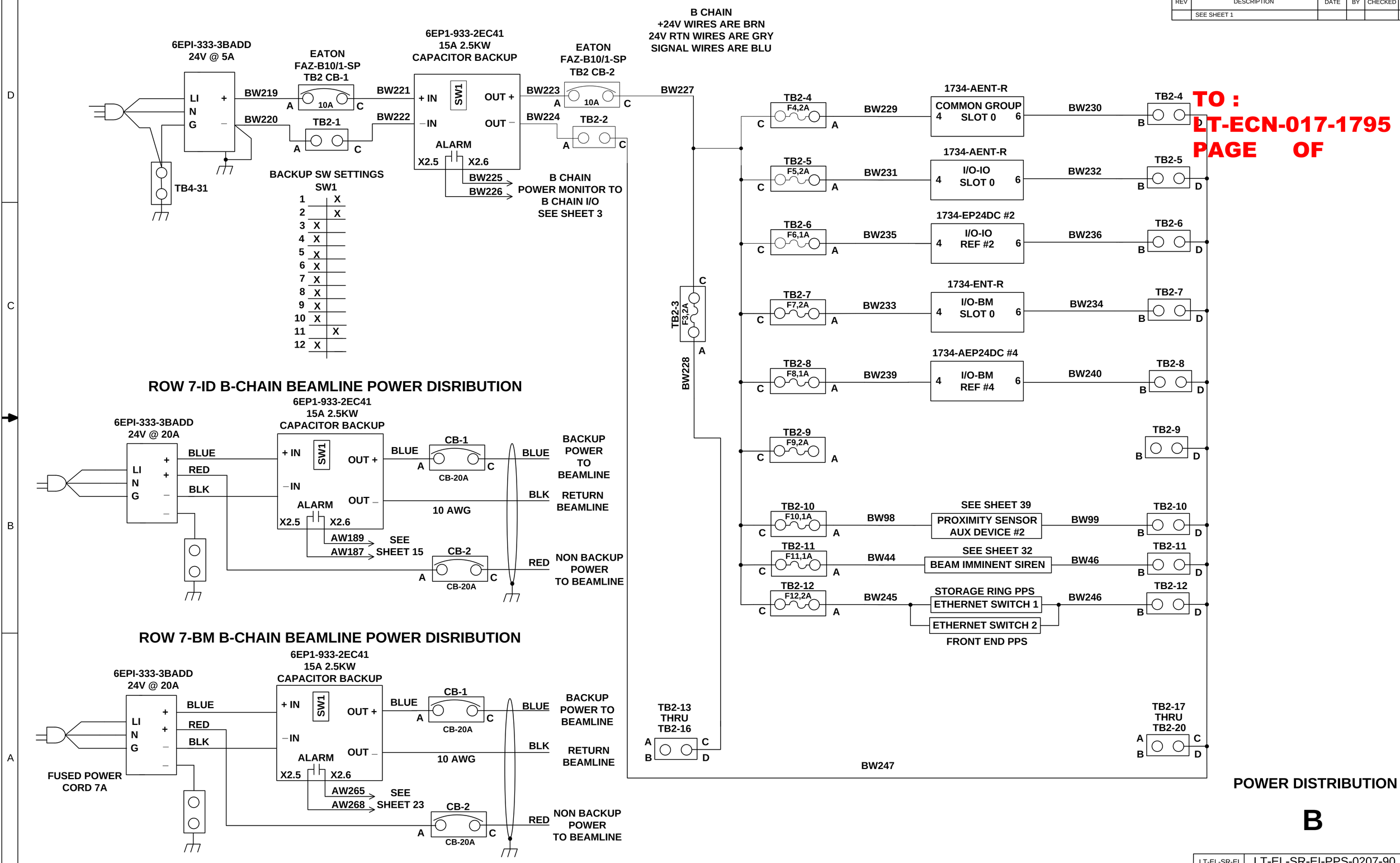

LT-EL-SR-EI	LT-EL-SR-EI-PPS-0207-90	E
DRAWING DIRECTORY	DRAWING NUMBER	REV

COMPUTER REPRODUCABLE | SCALE: N/A | SHEET 54 OF 61

LT-EL-SR-EI-PPS-0207-90

REV	DESCRIPTION	DATE	BY	CHECKED	APP
	SEE SHEET 1				

PPS I/O BOX TERMINAL LAYOUT TYPE 1

TYPE 1 I/O BOX					
ROW 1					
POWER SUPPLIES					
A CHAIN POWER SUPPLY		6EP1 333-3BA00			SIEMENS
A CHAIN CAPACITOR BACKUP		6EP1 333-2EC41			SIEMENS
HMI ETHERNER SWITCH		1783-US03T0IF			ALLEN BRADLY
STORAGE RING PPS A CHAIN ERHERNET SWITCH 1					SIEMENS
STORAGE RING SAFTEY NETWORK A CHAIN ETHERNET SWITCH 3		6GK5208-0BA10-2AA3			SIEMENS
FRONT END PPS A CHAIN ETHERNET SWITCH 2		6GK5204-2BB10-2AA3			
					SIEMENS
A CHAIN SWITCH 1		6GK5208-0B810-2AA3			
					ALLEN BRADLY
B CHAIN SWITCH 1		1783-US03T0IF			
FRONT END PPS B CHAIN ETHERNET SWITCH 2		1783-US06T0IF			ALLEN BRADLY
B CHAIN POWER SUPPLY		6EP1 333-3BA00			SIEMENS
B CHAIN CAPACITOR BACKUP		6EP1 333-2EC41			SIEMENS
ROW 2					
A CHAIN I/O					
I/O COMMON GROUP A					
SLOT	MODULE	SOCKET	SOCKET		
0	6ES7151-3BA23-0AB0	NA	PN INTERFACE MODULE IM151-3 PN		SIEMENS
1	6ES7138-4CA50-0AB0	6ES7193-4CC20-0AA0	POWER MODULE PM-E		
2	6ES7138-4FA04-0AB0	6ES7193-4CF40-0AA0	4/8FDI 8 SAFE IN		SIEMENS
3	6ES7138-4FA04-0AB0	6ES7193-4CF40-0AA0	4/8FDI 8 SAFE IN		SIEMENS
4	6ES7131-4BF00-0AB0	6ES7193-4CA40-0AA0	8DI 8 STANDARD IN		SIEMENS
5	6ES7132-4BF00-0AA0	6ES7193-4CA40-0AA0	8D0 STANDARD.OUT		SIEMENS
6	6ES7138-4FB03-0AA0	6ES7193-4CF40-0AA0	4FD0 4 SAFE OUT		SIEMENS

TO :
LT-ECN-017-1795
PAGE OF

LT-EL-SR-EI-PPS-0207-90

REV	DESCRIPTION	DATE	BY	CHECKED	APP
	SEE SHEET 1				

PPS I/O BOX TERMINAL LAYOUT TYPE 1

I/O ID GATE/LABRYNTH GROUP A				
SLOT	MODULE	SOCKET		
7	6ES7138-4CA50-0AB0	6ES7193-4CC20-0AA0	POWER MODULE PM-E	SIEMENS
8	6ES7138-4FA04-0AB0	6ES7193-4CF40-0AA0	4/8FDI 8 SAFE IN	SIEMENS
9	6ES7131-4BF00-0AA0	6ES7193-4CA40-0AA0	8DI 8 STANDARD IN	SIEMENS
10	6ES7138-4FB03-0AB0	6ES7193-4CF40-0AA0	4FD0 8 SAFE OUT	SIEMENS
11	6ES7132-4BF00 0AA0	6ES7193-4CA40-0AA0	800 8 STANDARD OUT	SIEMENS
I/O ID BEAMLINE GROUP A				
SLOT	MODULE	SOCKET		
0	6ES7151-3BA23-0AB0	NA	PN INTERFACE MODULE IM151-3 PN	SIEMENS
1	6ES7138-4CA50-0AB0	6ES7193-4CC20-0AA0	POWER MODULE PM-E	SIEMENS
2	6ES7138-4FA04-0AB0	6ES7193-4CF40-0AA0	4/8FDI 8 SAFE IN	SIEMENS
3	6ES7138-4FA04-0AB0	6ES7193-4CF40-0AA0	4/8FDI 8 SAFE IN	SIEMENS
4	6ES7131-4BF00-0AA0	6ES7193-4CA40-0AA0	8DI 8 STANDARD IN	SIEMENS
5	6ES7131-4BF00-0AA0	6ES7193-4CA40-0AA0	8DI 8 STANDARD IN	SIEMENS
6	6ES7138-4FB03-0AB0	6ES7193-4CF40-0AA0	4FD0 4 SAFE OUT	SIEMENS
7	6ES7132-4BF00-0AA0	6ES7193-4CA40-0AA0	8D0 STANDARD.OUT	SIEMENS
I/O BM BEAMLINE GROUP A				
SLOT	MODULE	SOCKET		
0	6ES7151-3BA23-0AB0	NA	PN INTERFACE MODULE IM151-3 PN	SIEMENS
1	6ES7138-4CA50-0AB0	6ES7193-4CC20-0AA0	POWER MODULE PM-E	SIEMENS
2	6ES7138-4FA04-0AB0	6ES7193-4CF40-0AA0	4/8FDI 8 SAFE IN	SIEMENS
3	6ES7138-4FA04-0AA0	6ES7193-4CF40-0AA0	4/8FDI 8 SAFE IN	SIEMENS
4	6ES7131-4BF00-0AA0	6ES7193-4CA40-0AA0	8DI 8 STANDARD IN	SIEMENS
5				
6	6ES7138-4FB03-0AB0	6ES7193-4CF40-0AA0	4FD0 4 SAFE OUT	SIEMENS
7	6ES7132-4BF00-0AA0	6ES7193-4CA40-0AA0	8D0 STANDARD.OUT	SIEMENS
TB27	4-2 COVER LARGE 3	1>6 1		
TB29	4-2 COVER LARGE 3	1>6 1	END CLAMP 5	

TO :
LT-ECN-017-1795
PAGE OF

1	3044636
2	3044092
3	3047293
4	3047303
5	1201413
6	EPDDFL4U
7	3044542
8	DDFL-4U
9	3044076
10	3047028
11	3047170

7-BM

B

LT-EL-SR-EI-PPS-0207-90

LT-EL-SR-EI (DRAWING DIRECTORY)	LT-EL-SR-EI-PPS-0207-90 (DRAWING NUMBER)	E (REV)
COMPUTER REPRODUCABLE	SCALE: N/A	SHEET 56 OF 61

REV	DESCRIPTION	DATE	BY	CHECKED	APP
	SEE SHEET 1				

PPS I/O BOX TERMINAL LAYOUT TYPE 1

ROW 3						
TB15	END CLAMP 5	4-2 COVER LARGE 3	1>20 1	4-2 COVER SMALL 4	21 2	
TB19	4-2 COVER LARGE 3	1>20 1	4-2 COVER SMALL 4	21 2		
TB21	4-2 COVER LARGE 3	1>20 1	4-2 COVER SMALL 4	21 2		
TB23	4-2 COVER LARGE 3	1>20 1	21 2			
TB25	4-2 COVER LARGE 3	1>5 1 / 6 7 / 7>15 1	16 2			
TB1	FUSE PLATE 6	1>12 8	13>21 7	END CLAMP 5	USE JUMPER STRIPS 1>12 AND 13>21	
CB1	EATON	WMZS1C05				
CB2	EATON	20A				
CB3	EATON	20A				
	KLASCHKA PROXIMITY		P/N 3514404220		ID / BM FRONT END	
TB17	END CLAMP 5	4-2 COVER LARGE	1>6 1	4-2 COVER SMALL 4	END CLAMP 5	
ROW 4						
TB3	END CLAMP 5	4-2 COVER LARGE 3	1>7 1	4-2 COVER SMALL 4	8 2	
TB5	4-2 COVER LARGE 3	1>2 1	4-2 COVER SMALL 4	FUSE PLATE 6	3 8	4 9
TB7	4-2 COVER LARGE 3	1>2 1	4-2 COVER SMALL 4	FUSE PLATE 6	3 8	4 9
TB9	4-2 COVER LARGE 3	1>3 1	4-2 COVER SMALL 4	4 2		
TB11	4-2 COVER LARGE 3	1>3 1	4-2 COVER SMALL 4	4 2		
TB13	4-2 COVER LARGE 3	1>17 1	4-2 COVER SMALL 4	18 2	END CLAMP 5	

RELAY	MODULE	SOCKET	
K1	ALTECH 5669	SOCKET SCHRACK RT 78626	A CHAIN HII BEAM IMMINENT SIREN PERMIT
K3	ALTECH 5669	SOCKET SCHRACK RT 78626	A CHAIN HII BEAM IMMINENT BEACON PERMIT
K5	ELESTA SIM3	ELESTA SRD-SIM4	ID PHOTON SHUTTER OPEN FAN OUT RELAY

TO :
LT-ECN-017-1795
PAGE OF

1	3044636
2	3044092
3	3047293
4	3047303
5	1201413
6	EPDDFL4U
7	3044542
8	DDFL-4U
9	3044076
10	3047028
11	3047170

LT-EL-SR-EI-PPS-0207-90

LT-EL-SR-EI (DRAWING DIRECTORY)	LT-EL-SR-EI-PPS-0207-90 (DRAWING NUMBER)	E (REV)
COMPUTER REPRODUCABLE	SCALE: N/A	SHEET 57 OF 61

REV	DESCRIPTION	DATE	BY	CHECKED	APP
	SEE SHEET 1				

TO :
LT-ECN-017-1795
PAGE OF

RELAY	MODULE	SOCKET	
K7	ALTECH 5669	SOCKET SCHRACK RT 78626	A CHAIN ACCESS PERMIT RELAY
K9	ALTECH 5669	SOCKET SCHRACK RT 78626	A CHAIN LOCK PERMIT
K11	ALTECH 5669	SOCKET SCHRACK RT 78626	A CHAIN ID MASTER SHUTTER RELAY
K13	ELESTA SIM3	SOCKET ELESTA SRD-SIM4	BM PHOTON SHUTTER OPEN FAN OUT RELAY
K15	ALTECH 5669	SOCKET SCHRACK RT 78626	ID REQUEST TO CLOSE SHUTTERS
K17	ALTECH 5669	SOCKET SCHRACK RT 78626	BM REQUEST TO CLOSE SHUTTERS
K19	ALTECH 5669	SOCKET SCHRACK RT 78626	ID SAFETY SHUTTER OVER TEMP,PHOTON SHUTTER INTERLOCK A CHAIN
K21	ALTECH 5669	SOCKET SCHRACK RT 78626	BM SAFETY SHUTTER OVER TEMP,PHOTON SHUTTER INTERLOCK A CHAIN
K12	ELESTA SRG282Z	SOCKET SCHRACK RT 78626	ID SAFETY SHUTTER OVER TEMP,PHOTON SHUTTER INTERLOCK B CHAIN
K14	ELESTA SRG282Z	SOCKET SCHRACK RT 78626	BM SAFETY SHUTTER OVER TEMP,PHOTON SHUTTER INTERLOCK B CHAIN
K2	ELESTA SRG282Z	SOCKET SCHRACK RT 78626	B CHAIN HII BEAM IMMINENT SIREN PERMIT
K4	ELESTA SRG282Z	SOCKET SCHRACK RT 78626	B CHAIN HII BEAM IMMINENT BEACON PERMIT
K6	ELESTA SRG282Z	SOCKET SCHRACK RT 78626	B CHAIN AREA SAFE SIGN PERMIT
K10	ELESTA SRG282Z	SOCKET SCHRACK RT 78626	B CHAIN DOOR LOCK PERMIT

TB4	END CLAMP 5	4-2 COVER LARGE 3	1>10 1	4-2 COVER SMALL 4	11 2
TB6	4-2 COVER LARGE 3	1>3 1	4-2 COVER SMALL 4	4 2	
TB8	4-2 COVER LARGE 3	1>3 1	4-2 COVER SMALL 4	4 2	
TB12	4-2 COVER LARGE 3	1>9 1	4-2 COVER SMALL 4	10 2	END CLAMP 5

1	3044636
2	3044092
3	3047293
4	3047303
5	1201413
6	EPDDFL4U
7	3044542
8	DDFL-4U
9	3044076
10	3047028
11	3047170

LT-EL-SR-EI-PPS-0207-90

LT-EL-SR-EI (DRAWING DIRECTORY)	LT-EL-SR-EI-PPS-0207-90 (DRAWING NUMBER)	E (REV)
COMPUTER REPRODUCABLE	SCALE: N/A	SHEET 58 OF 61

REV	DESCRIPTION	DATE	BY	CHECKED	APP
	SEE SHEET 1				

PPS I/O BOX TERMINAL LAYOUT TYPE 1

TO :
LT-ECN-017-1795
PAGE OF

ROW 5					
B CHAIN I/O					
A CHAIN FRONT END PPS	MIPP/AD/IT IP ST		FIBER OPTIC SPLICE BOX TO COMPUTER ROOM		HIRSCHMANN
I/O COMMON GROUP B					
SLOT	MODULE	SOCKET (QTY)			
0	1734-AENTR		24V DC ETHERNET ADAPTER		AB
1	1734-IB8S	1734-TOP3 (2)	AB INPUT F 8 SAFETY IN		AB
2	1734-IB8	1734-TB	AB INPUT STANDARD 8 STANDARD IN		AB
3	1734-OB8E	1734-TB	8 CHANNEL STANDARD OUT		AB
4	1734-OW4	1734-TB	RELAY MODULE 4 OUTPUT		AB
5	1734-IB8S	1734-TOP3 (2)	AB INPUT F 8 SAFETY OUT		AB
I/O GATE/LABYRINTH GROUP B					
6	1734-IB8S	1734-TOP3 (2)	AB INPUT F 8 SAFETY IN		AB
7	1734-IB8S	1734-TB	AB INPUT STANDARD 8 STAND OVRD IN		AB
8	1734-OW4	1734-TB	RELAY MOD OUT		AB
9	1734-0B8S	1734-TB	AB INPUT F 8 SAFETY IN		AB
I/O ID BEAMLINE GROUP B					
SLOT	MODULE	SOCKET			
0	1734-AENTR		24V DC ETHERNET ADAPTER		AB
1	1734-IB8S	1734-TOP3 (2)	AB INPUT F 8 SAFETY IN		AB
2	1734-IB8S	1734-TOP3 (2)	AB INPUT F 8 SAFETY IN		AB
3	1734-IB8S	1734-TB	AB INPUT STANDARD 8 STANDARD IN		AB
4	1734-IB8S	1734-TB	AB INPUT STANDARD 8 STANDARD IN		AB
5	1734-IB8S	1734-TOP3	8 SAFETY OUT		AB
6	1734-OB8	1734-TB (2)	8 CHANNEL STANDARD OUT		AB
I/O BM BEAMLINE GROUP B					
SLOT	MODULE	SOCKET			
0	1734-AENTR		24V DC ETHERNET ADAPTER		AB
1	1734-IB8S	1734-TOP3 (2)	AB INPUT F 8 SAFETY IN		AB
2	1734-IB8S	1734-TOP3 (2)	AB INPUT F 8 SAFETY IN		AB
3	1734-IB8S	1734-TB	AB INPUT STANDARD 8 STANDARD IN		AB
4	1734-OB8S	1734-TOP3 (2)	8 SAFETY OUT		AB
5	1734-OB8	1734-TB	8 CHANNEL STANDARD OUT		AB
TB28	4-2 COVER LARGE 3	1>2 1	4-2 COVER SMALL 4		
TB30	4-2 COVER LARGE 3	1>2 1	4-2 COVER SMALL 4	END CLAMP 5	
B CHAIN FRONT END PPS	MIPP/AD/IL LP LC		FIBER OPTIC SPLICE BOX TO COMPUTER ROOM		HIRSCHMANN

1	3044636
2	3044092
3	3047293
4	3047303
5	1201413
6	EPDDFL4U
7	3044542
8	DDFL-4U
9	3044076
10	3047028
11	3047170

LT-EL-SR-EI-PPS-0207-90

LT-EL-SR-EI (DRAWING DIRECTORY)	LT-EL-SR-EI-PPS-0207-90 (DRAWING NUMBER)	E (REV)
COMPUTER REPRODUCABLE	SCALE: N/A	SHEET 59 OF 61

REV	DESCRIPTION	DATE	BY	CHECKED	APP
	SEE SHEET 1				

PPS I/O BOX TERMINAL LAYOUT TYPE 1

ROW 6					
TB16	END CLAMP 5	4-2 COVER LARGE 3	1>20 1	4-2 COVER SMALL 4	21 2
TB20	4-2 COVER LARGE 3	1>20 1	4-2 COVER SMALL 4	21 2	
TB22	4-2 COVER LARGE 3	1>20 1	4-2 COVER SMALL 4	21 2	
TB24	4-2 COVER LARGE 3	1>20 1	4-2 COVER SMALL 4	21 2	
TB26	4-2 COVER LARGE 3	1>5 1 / 6 7 / 7>15 1	4-2 COVER SMALL 4	21 2	
TB2	FUSE PLATE 6	1>12 8	13>21 7	END CLAMP 5	USE BUSS JUMPER STRIPS 1>12 & 13>21
CB1	EATON	20A			
CB2	EATON	20A			
	KLASCHKA PROXIMITY		P/N 3514404220		ID / BM FRONT END
TB18	END CLAMP 5	4-2 COVER LARGE 3	1>6 1	4-2 COVER SMALL 4	END CLAMP 5

TO :
LT-ECN-017-1795
PAGE OF

1	3044636
2	3044092
3	3047293
4	3047303
5	1201413
6	EPDDFL4U
7	3044542
8	DDFL-4U
9	3044076
10	3047028
11	3047170

LT-EL-SR-EI-PPS-0207-90

LT-EL-SR-EI (DRAWING DIRECTORY)	LT-EL-SR-EI-PPS-0207-90 (DRAWING NUMBER)	E (REV)
COMPUTER REPRODUCABLE	SCALE: N/A	SHEET 60 OF 61

REV	DESCRIPTION	DATE	BY	CHECKED	APP
	SEE SHEET 1				

TO :
LT-ECN-017-1795
PAGE OF

PPS I/O BOX TERMINAL LAYOUT TYPE 1

ROW 7					
POWER SUPPLIES					
A CHAIN ID BEAMLINE POWER SUPPLY		6EP1 333-3BADD			SIEMENS
A CHAIN ID CAPACITOR BACKUP		6EP1 333-2EC41			SIEMENS
BL P.S. CIRCUIT BREAKER		20A			EATON
BL CAP BACKUP CIRCUIT BREAKER		20A			EATON
A CHAIN BM BEAMLINE POWER SUPPLY		6EP1 333-3BADD			SIEMENS
A CHAIN BM CAPACITOR BACKUP		6EP1 333-2EC41			SIEMENS
BL P.S. CIRCUIT BREAKER		20A			EATON
BL CAP BACKUP CIRCUIT BREAKER		20A			EATON
B CHAIN ID BEAMLINEPOWER SUPPLY		6EP1 333-3BADD			SIEMENS
B CHAIN ID CAPACITOR BACKUP		6EP1 333-2EC41			SIEMENS
BL P.S. CIRCUIT BREAKER		20A			EATON
BL CAP BACKUP CIRCUIT BREAKER		20A			EATON
B CHAIN BM BEAMLINE POWER SUPPLY		6EP1 333-3BADD			SIEMENS
B CHAIN BM CAPACITOR BACKUP		6EP1 333-2EC41			SIEMENS
BL P.S. CIRCUIT BREAKER		20A			EATON
BL CAP BACKUP CIRCUIT BREAKER		20A			EATON

LT-EL-SR-EI-PPS-0207-90

LT-EL-SR-EI (DRAWING DIRECTORY)	LT-EL-SR-EI-PPS-0207-90 (DRAWING NUMBER)	E (REV)
COMPUTER REPRODUCABLE	SCALE: N/A	SHEET 61 OF 61

The only official copy of this document is the one online in the NSLS-II SharePoint Document Center. Before using a printed copy, verify that it is current by checking the printed document's revision history with that of the online version.

Doc No: NSLSII-ESH-PRC-001

NSLS-II PROCEDURE: BEAMLINE RADIOLOGICAL INTERLOCK TEST

October 10, 2016

Rev. 1

T. McDonald

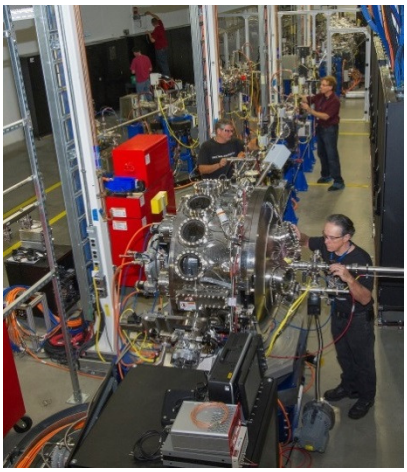

Think Safety. Act Safely.

The only official copy of this document is the one online in the NSLS-II SharePoint Document Center. Before using a printed copy, verify that it is current by checking the printed document's revision history with that of the online version.

National Synchrotron Light Source II, Brookhaven National Laboratory			
Doc No. **NSLSII-ESH-PRC-001**	Author: T. McDonald	Review Frequency: **3 yrs**	Rev. **1**
Title: **Beamline Radiological Interlock Test**			Effective Date: **10Oct2016**

ESH Review:

10/10/2016

X Robert Chmiel

Robert Chmiel
NSLS II Safety Officer
Signed by: Chmiel, Robert

By signing this Procedure I acknowledge that it complies with all ESH requirements and if performed correctly, will not present a significant hazard to personnel or equipment.

Authorization Basis Review:

10/11/2016

X

Steve Moss
Authorization Basis Manager
Signed by: Moss, Steven H

By signing this Procedure I acknowledge that a USI Screening/Evaluation has been performed and this Procedure does not adversely impact the NSLS-II Authorization Basis Documents.

Approved:

10/11/2016

X

Robert Lee
ESH Manager
Signed by: Lee, Robert J

By approving this Procedure I agree that the appropriate personnel have reviewed this document and I authorize this work to commence as written.

REVISION HISTORY

REVISION	SECTION(S)	PAGE #	DATE	List of Reviewers	DESCRIPTION
1	All	All	10Oct2016	J. Aloi. S. Buda, M. Benmerrouche, B. Lein, E. Orr, C. Porretto, F. Willeke, P. Zschack	First Issue. Procedure created to replace multiple procedures originally developed for each specific NSLS-II beamline. Beamline Radiological test checklists, formerly captured as "Attachment A" in individual test procedures, will now be saved as "Templates" in NSLS-II SharePoint Key Safety Records.

ACRONYMS

ABM	Authorization Basis Manager
ARM	Area Radiation Monitor
ASE	Accelerator Safety Envelope
BNL	Brookhaven National Laboratory
ESH	Environment, Safety and Health
FOE	First Optical Enclosure
HVPS	High Voltage Power Supply
LOTO	Lockout/Tagout
NSLS-II	National Synchrotron Light Source II
PPS	Personnel Protection System
PS	Power Supply
RF	Radio Frequency
SAF	Safety Approval Form
SBMS	Standards-Based Management System
SR	Storage Ring

1 PURPOSE AND SCOPE

The purpose of this procedure is to provide instructions for testing and certifying the radiological interlock system for all BNL NSLS-II Beamlines. Each beamline PPS system will be re-tested every six months, in accordance with SBMS Program Description: *Radiological Control Manual* and SBMS Subject Area, *Interlock Safety for High Risk Hazards*. Certification shall be completed sometime during, but no later than, the last day of the calendar month in which it is due. Any beamline PPS system going beyond the last day of the month in which it is due will be disabled by EHS Staff using Centrally Controlled LOTO until certification is complete. Testing will also be required after a change in wiring, components, or programming in accordance with PS-ESH-PRM-3.4.1, *Procedure for Safety System Work Permits* and the guidelines for certification specified in PS-C-ASD-SPC-SR-PPS-001, *Storage Ring Personnel Protection System (SPPS) Design Description, and* PS-C-XFD-SPC-PPS-001, *Beamline Personnel Protection System, (BLPPS) and Front End Personnel Protection System Design Description*. Changes to the system shall be performed in accordance with PS-C-ASD-PRC-057*, NSLS-II PPS Configuration Management*.

2 PREREQUISITES

2.1 At least one Tester shall be ESH Staff.

2.2 Assistants shall be designated by the Testers.

2.3 An NSLS-II Engineering Review has been completed for all hutch door switches to ensure proper positioning.

3 HAZARDS, CONTROLS AND LIMITS

3.1 All steps in this procedure that require LOTO of systems/equipment for servicing and maintenance activities shall be performed in accordance with SBMS Subject Area, *Lockout/Tagout (LOTO) for Installation, Demolition, or Service and Maintenance*.

3.2 All steps in this procedure that require LOTO for any purpose other than servicing and maintenance shall be performed in accordance with PS-C-ASD-PRC-005, *Centrally Controlled Lockout/Tagout (LOTO) Procedure*.

3.3 Mufflers shall be used to reduce noise during testing by placing them on the sounders.

3.4 The radiological interlock system for the beamline is a credited control in accordance with the ASE. Any deviation or discrepancy from an expected test result may be a violation of the ASE and shall be reported to the ABM as soon as practical.

3.5 All steps in the test checklist that require a beamline search shall be performed in accordance with PS-C-XFD-PRC-010, *Beamline Enclosure Search and Secure and Breaking Security Procedure.*

3.6 All configuration control checklists, commissioning approval forms, and SAFs for beamline's requiring venting vacuum shall be voided prior to the start of certification testing.

3.7 All steps in the test checklist requiring venting beamline vacuum shall be performed in accordance with PS-C-XFD-PRC-001, *Beamline Vacuum System Venting Procedure.*

3.8 All steps in the test checklist requiring testing of beamline FOE ARMs shall be performed in accordance with PS-C-ASD-PRC-008, *NSLS-II Area Radiation Monitor PPS Test*

4 PROCEDURE

4.1 Test and Certify Radiological Interlocks

Note: Two Testers are required to test and certify beamline radiological interlocks.

4.1.1 Testers notify the Lead Operator and Lead Beamline Scientist that a test of the Beamline radiological interlocks will be performed.

4.1.2 Testers obtain the Beamline enable key and Beamline PPS reset key from the Control Room.

Note: LOTO may be applied to other pieces of equipment such as: injection shutters, bending magnet power supplies, linac PPS enable switch, booster PPS enable switch or SR PPS enable switches that offer an equivalent amount of protection. Live testing will require the LOTO listed in 4.1.3 and 4.1.4.

4.1.3 Primary Authorized Employee applies LOTO to the following:

- Three linac modulator power supply line cords OR Booster Dipole F Power Supply in accordance with SBMS Subject Area, *Lockout/Tagout (LOTO) for Installation, Demolition, or Service and Maintenance*
- Booster RF HVPS OR Booster low level RF drive termination in accordance with PS-C-ASD-PRC-047, *NSLS-II Booster Ring Radio Frequency System High Voltage Power Supply (BR-HVPS) Lockout/Tagout (LOTO)*
- SR System "C" low level RF drive termination OR SR System "C" RF output connection to cavity in accordance with SBMS Subject Area, *Lockout/Tagout (LOTO) for Installation, Demolition, or Service and Maintenance*
- SR System "D" low level RF drive termination OR SR System "D" RF output connection to cavity in accordance with SBMS Subject Area, *Lockout/Tagout (LOTO) for Installation, Demolition, or Service and Maintenance*

4.1.4 Tester applies LOTO to each of the following in accordance with PS-C-ASD-PRC-005, *Centrally Controlled Lockout/Tagout (LOTO) Procedure*:

- Gun HVPS Enable switch
- Three linac modulator power supply line cords OR Booster Dipole F Power Supply
- Booster RF HVPS OR Booster low level RF drive termination
- SR System "C" low level RF drive termination OR SR System "C" RF output connection to cavity
- SR System "D" low level RF drive termination OR SR System "D" RF output connection to cavity

Note: With the exception of LOTO checklist items, checklist items (i.e., tests) specified in the specific *NSLS-II Beamline Radiological Interlock Test Checklists* may be performed without all of the specified checklist items (i.e., partial radiological interlock test).

Note: The most current version of the specific Beamline Radiological Interlock Checklists are maintained in the Key Safety Records section of the NSLS-II SharePoint Document Center, under the heading "PPS" (https://ps.bnl.gov/docs/Reference/Forms/KSRPPS.aspx).

4.1.5 Testers use the specific *NSLS-II Beamline Radiological Interlock Test Checklist* (example in Attachment A) AND certify the radiological interlocks.

a. IF the correct corresponding observation has been made, THEN make a checkmark (✓) for each step.

b. IF any step results in an undesired event or outcome, THEN contact the Accelerator Safety Systems Engineer and/or Technician.

c. IF the undesired outcome or event requires a change to wiring, components, or programming, THEN make a checkmark (✓) in the Test Result "Failed" box at the top of the checklist.

d. IF the checklist is fully completed with desirable outcomes, THEN make a checkmark (✓) in the Test Result "Passed" box at the top of the checklist.

4.1.6 Testers notify the Lead Operator that the test of the NSLS-II Beamline radiological interlocks is completed and the resulting outcome (i.e., Passed or Failed).

4.1.7 Testers remove LOTO from each of the following in accordance with PS-C-ASD-PRC-005, *Centrally Controlled Lockout/Tagout (LOTO) Procedure*:

- Gun HVPS Enable switch
- Three linac modulator power supply line cords OR Booster Dipole F Power Supply
- Booster RF HVPS OR Booster low level RF drive termination
- SR System "C" low level RF drive termination OR SR System "C" RF output connection to cavity
- SR System "D" low level RF drive termination OR SR System "D" RF output connection to cavity

4.1.8 Testers ensure all Beamline PPS cabinets are secure and locked.

4.1.9 Testers return the Beamline enable key and the Beamline PPS reset key to the Control Room.

4.1.10 Testers notify Primary Authorized Employees for each of the following systems that radiological interlock testing is complete AND removal of LOTO may be performed:

- Three linac modulator power supply line cords OR Booster Dipole F Power Supply
- Booster RF HVPS OR Booster low level RF drive termination
- SR System "C" low level RF drive termination OR SR System "C" RF output connection to cavity
- SR System "D" low level RF drive termination OR SR System "D" RF output connection to cavity

4.1.11 Testers provide the completed test checklist to the Configuration Management Specialist for posting on the NSLS-II SharePoint Document Center.

5 REFERENCES

5.1 PS-C-ASD-PRC-005, *Centrally Controlled Lockout/Tagout (LOTO) Procedure*

5.2 PS-C-ASD-PRC-008, *NSLS-II Area Radiation Monitor PPS Test*

5.3 PS-C-ASD-PRC-047, *NSLS-II Booster Ring Radio Frequency System High Voltage Power Supply (BR-HVPS) Lockout/Tagout (LOTO)*

5.4 PS-C-ASD-PRC-057*, NSLS-II PPS Configuration Management*

5.5 PS-ESH-PRM-3.4.1, *Procedure for Safety System Work Permits*

5.6 PS-C-XFD-PRC-010, *Beamline Enclosure Search and Secure and Breaking Security Procedure*

5.7 SBMS Program Description: *Radiological Control Manual*

5.8 SBMS Subject Area, *Interlock Safety for High Risk Hazards*

5.9 SBMS Subject Area, *Lockout/Tagout (LOTO) for Installation, Demolition, or Service and Maintenance*

5.10 PS-C-CMD-PRC-002, *Records Management Procedure*

5.11 PS-C-ASD-SPC-SR-PPS-001, *Storage Ring Personnel Protection System (SPPS) Design Description*

5.12 PS-C-XFD-PRC-001, *Beamline Vacuum System Venting Procedure*

5.13 PS-C-XFD-SPC-PPS-001, *Beamline Personnel Protection System, (BLPPS) and Front End Personnel Protection System Design Description*

6 ATTACHMENTS

Attachment A, *Example NSLS-II Beamline Radiological Interlock Test Checklist*

7 DOCUMENTATION

The following record is generated as a result of this procedure, and shall be maintained in accordance with PS-C-CMD-PRC-002, *Records Management Procedure*:

- Completed NSLS-II Beamline Radiological Interlock Test Checklists

8 DEFINITIONS

None.

If you have any questions or feedback regarding this document, please click this link.

The only official copy of this document is the one online in the NSLS-II SharePoint Document Center. Before using a printed copy, verify that it is current by checking the printed document's revision history with that of the online version.

Attachment A

EXAMPLE NSLS-II Beamline Radiological Interlock Test Checklist

Test Reason:	Test Result: ☐ Passed ☐ Failed		
	Test Type: ☐Pre-Certification	☐Certification	☐ Partial
Test Date:	Start Time:	Finish Time:	
Tester 1:	Assistant 1:		
Tester 2:	Assistant 2:		
Tester 1 Signature:	Tester 2 Signature:		
*Reviewer 1:	Reviewer 1 sig.:		
Reviewer 2:	Reviewer 2 sig.:		
** Safety Signature 17-BM (Beamline HMI) A Chain: B Chain:	Previous 17-BM SS# Date: / / A Chain: B Chain:		
** Safety Signature Pentant 5 Beamline (SR HMI) A Chain: B Chain:	Previous Pentant 5 SS# Date: / / A Chain: B Chain:		

* A review by an Accelerator Safety Systems Engineer and a designated specialist (Reviewer 2) is only required upon a Test failure.
**If Current Safety Signature number (found in top left corner on HMI) is different from previous number, contact the Accelerator Safety Systems Cognizant Engineer.

PREPARATION:

I. All hutch door switches have been evaluated by NSLS-II Engineering for proper positioning	
II. Inform Control Room Lead Operator that testing will be done	
III. Obtain Beamline enable and PPS reset keys from Control Room	
IV. Verify that beamline vacuum and water interlocks are satisfied	
V. Place muffler on beam imminent sounder	
VI. Request Lead Operator enable Master shutters	

A1 ***Verify System Lockouts***

Gun HVPS output cable connector ____

Linac modulator line cords (3) OR Booster Dipole F PS 480 V ____

Booster RF HVPS 480 V OR Booster low level RF drive termination ____

SR System C low level RF drive termination OR SR System C RF output connection to cavity ____

SR System D low level RF drive termination OR SR System D RF output connection to cavity ____

A2 ***Verify Search and Time Beam Imminent Alarm***

Verify that search path is free from obstacles and line of sight is clear in search mirrors in accordance with PS-C-XFD-PRC-010, *Beamline Enclosure Search and Secure and Breaking Security Procedure* ____

	A
Close the Right door	____
"Entry Permitted" sign is ON	____
Using the keypad, lock the closed doors	____
Press SB1	____
SB1 illuminates	____
Search sounder sounds	____
Search yellow beacon flashing	____
Press SB2	____
SB2 illuminates	____
Exit hutch and close main door	____
*Press SBE and **begin timing***	____
Beam imminent alarm sounds for 30 seconds	____
After warning, (FOE Interlocked A and B ON (**green**), HMI	____
"Interlocked" sign is ON	____
Maglock A and B ON, HMI	____
Press the SBE/Access Button	____
Interlocked sign OFF, "Entry Permitted" sign is ON	____
FOE Interlocked A and B OFF, HMI	____
Maglock A OFF (may require opening Maglock on key pad)	____
Open door	____
Door opens, Maglock B OFF door	____

A3 ***Out of Sequence Search in the FOE (A hutch)***

	A
Press SB2	____
SB2 does not illuminate	____
Press SB1	____

SB1 illuminates ____

Close hutch door and press SBE ____

Hutch does NOT secure ____

A4 ***Search timeout***

	A
Press first search button and ***begin timing***	____
Complete search ***without pressing Final Search button***	____
Search sounders off in 2 minutes	____
Press Final Search button	____
Search does not complete	____

A5 ***Shutter enable***

Place actuators on FOE door switches and attach Maglock devices		____
	Beamline Online A and B OFF	____
Enable beamline with key and perform a reset	Beamline Online A and B ON (**green**)	____
Search the FOE	FE Shutter Permits A and B ON ***after*** Beam Imminent Warning	____
Open FE shutters	FE Shutters A and B indicate open (**green**)	____
	"Beam On" sign is ON	____
Close FE shutters	FE Shutters A and B indicate closed (**red**)	____

A6 ***Emergency Stops (ES) FOE (A hutch)***

For each ES search hutch	**ES1**	**ES2**	**ES3**
Open FE Shutters from keypad	____	____	____
FE Shutters A and B open (**green**)	____	____	____
FOE Interlocked A and B ON (**green**)	____	____	____
FE Shutter Permit A and B ON (**green**)	____	____	____
FE Critical Device Permits A and B ON	____	____	____
Right Maglock A ON (**green**)	____	____	____
Left Maglock A ON (**green**)	____	____	____
Press ES	____	____	____
FE Shutters A and B closed (**red**)	____	____	____
FOE Interlocked A and B OFF	____	____	____

FE Shutter Permit A and B OFF	____	____	____
FE Critical Device Permits A and B OFF	____	____	____
Right Maglock A OFF	____	____	____
Left Maglock A OFF	____	____	____
Pull out ES	____	____	____
ES Sum Latch OFF	____	____	____
Reset fault	____	____	____
ES Sum Latch ON (**green**)	____	____	____

A7 ***FOE Labyrinth 1 Switches and Latches***

Place actuators on the labyrinth switches/latches and downstream left door switches and Maglock. ____

Check the corresponding Permits for each switch tested (e.g., A Permit for switch A1).

	A	**B**	**Latch**
Search hutch	____	____	____
Open FE Shutters from keypad	____	____	____
FE Shutters A and B open (**green**)	____	____	____
FOE Interlocked A and B ON (**green**)	____	____	____
FE Shutter Permit A and B ON (**green**)	____	____	____
Cable Lab 1 Switches/Latch ON (**green**)	____	____	____
FE Critical Device Permits A and B ON	____	____	____
Remove one switch actuator	____	____	____
FE Shutters A and B closed (**red**)	____	____	____
FOE Interlocked OFF	____	____	____
FE Shutter Permit OFF	____	____	____
Cable Lab 1 Switch/Latch Permit OFF	____	____	____
FE Critical Device Permits A and B OFF	____	____	____
Replace switch actuator and reset fault	____	____	____
Remove labyrinth actuators and close labyrinth door			____

A8 ***FOE Right Door Switches***

Place actuators on the door switches and Maglock. ____

Check the corresponding Permits for each switch tested (e.g., A Permit for switch A1).

	A	B	Reed
Search hutch	____	____	____
Open FE Shutters from keypad	____	____	____
FE Shutters A and B open (**green**)	____	____	____
FOE Interlocked A and B ON (**green**)	____	____	____
FE Shutter Permit A and B ON (**green**)	____	____	____
FOE Door Switch Sum A and B ON (**green**)	____	____	____
FE Critical Device Permits A and B ON	____	____	____
Remove one switch actuator	____	____	____
FE Shutters A and B closed (**red**)	____	____	____
FOE Interlocked OFF	____	____	____
FE Shutter Permit OFF	____	____	____
FOE Door Switch Sum OFF	____	____	____
FE Critical Device Permits A and B OFF	____	____	____
Replace switch actuator and reset fault	____	____	____
Remove actuators and close door			____

A9 ***FOE Left Door Switches***

Place actuators on the door switches and Maglock. ____

Check the corresponding Permits for each switch tested (e.g., A Permit for switch A1).

	A	B	Reed
Search hutch	____	____	____
Open FE Shutters from keypad	____	____	____
FE Shutters A and B open (**green**)	____	____	____
FOE Interlocked A and B ON (**green**)	____	____	____
FE Shutter Permit A and B ON (**green**)	____	____	____
FOE Door Switch Sum A and B ON (**green**)	____	____	____
FE Critical Device Permits A and B ON	____	____	____
Remove one switch actuator	____	____	____

FE Shutters A and B closed (**red**) ____ ____ ____

FOE Interlocked OFF ____ ____ ____

FE Shutter Permit OFF ____ ____ ____

FOE Door Switch Sum OFF ____ ____ ____

FE Critical Device Permits A and B OFF ____ ____ ____

Replace switch actuator and reset fault ____ ____ ____

Remove actuators and close door ____

A10 ***Magnetic Lock Test (FOE)***

Connect the FOE test box (Attachment B Figure B4) to the PPS cabinet (Attachment B Figure B7). Use the box to turn ON the Maglocks (set switches to "Normal"). ____

Repeat steps for each door: Right (R), Left (L)

	R	**L**
Search hutch	____	____
FOE Interlocked A and B ON (**green**)	____	____
FE Shutter Permit A and B ON (**green**)	____	____
Door Maglock A and B ON (**green**)	____	____
Open FE Shutters	____	____
FE Shutters open (**green**)	____	____
Using FOE test box, turn OFF Maglock	____	____
Door Maglock A OFF	____	____
FE Shutters closed (**red**)	____	____
FOE Interlocked A OFF	____	____
FE Shutter Permit A OFF	____	____
Turn On Maglock and reset fault	____	____
Search hutch	____	____
Using FE Shutter test fixture, Open FE Shutters	____	____
FE Crtical Device Permits A and B ON	____	____
Using FOE test box, turn OFF Maglock	____	____
Within 3 seconds: FE Critical Devices Permits A Chain OFF	____	____

Disconnect the FOE test box and reset fault ____

A11 ***Observe FE Safety Shutter(s) Operation***

With Maintenance Door open, connect FE Shutter test fixture (Attachment B Figure B5). ____

		Shutters are in the closed (down) position	____
		FE Shutter Closed A and B (**red**), HMI	____
	Turn the "Air" switch ON		____
	Open FE Photon Shutter and SSs A and B	Shutters open freely without hesitation	____
		Shutters are in the open (up) position	____
		FE Shutter Open A and B (**green**), HMI	____
	Actuate Shutters closed	FE Shutter Closed A and B (**red**), HMI	____
A12	***FE Safety Shutters can only be Closed if FE Photon Shutter is Closed***		
	Search hutch	FOE Interlocked A and B ON (**green**), HMI	____
		FE Critical Devices Permits A and B ON (**green**), HMI	____
	Open FE SSA	SSA Open	____
	Open FE Photon Shutter	FE Critical Devices Permits A and B OFF, HMI	____
	Close Shutters		____
	Reset fault	FE Critical Devices Permits A and B ON (**green**), HMI	____
	Open FE SSB	SSB Open	____
	Open FE Photon Shutter	FE Critical Devices Permits A and B OFF, HMI	____
	Close Shutters		____
	Reset fault	FE Critical Devices Permits A and B ON (**green**), HMI	____
A13	***Beamline Enable Key (Opening shutter without key trips SR RF and Dipole PS)***		
	Remove beamline enable key	Beamline Online A and B OFF	____
	Search FOE	FOE Interlocked A and B ON (**green**), HMI	____
		FE Critical Devices Permits A and B ON (**green**), HMI	____
	Using FE Shutter test fixture, Open FE Shutters	FE Critical Devices Permits A and B OFF	____
	Replace beamline enable key and reset faults	Beamline Online A and B ON (**green**)	____
	Live Testing		
A14	***Reach Back FOE Door Switches***		
	Secure P1 through P5	SR Secure, A and B chain, SR HMI	____

Place actuators on FOE hutch downstream left door switches and Maglock		____
Search hutch	FOE Interlocked A and B ON (**green**), HMI	____
	FE Critical Devices Permits A and B ON (**green**), HMI	____
Check Control Room SR HMI (MCR beamline 1)	FE Critical Device Permit A and B ON (**green**), SR HMI	____
Check I/O Box 17 Beamline Enable Panel	FE Critical Devices Permits A and B LEDs ON	____
Check I/O Box 28 Beamline Enable Panel	FE Critical Device Permit Sum A and B LEDs ON	____
	FE Shutters Closed A and B LEDs ON	____
Check Dipole PS (positive) Beamline Interface	A and B Permits ON, Dipole PS Pos. Interface	____
Check Dipole PS (negative) Beamline Interface	A and B Permits ON, Dipole PS Neg. Interface	____
Check SR RF System C HVPS Beamline Interface	A and B Permits ON, SR RF System C HVPS Interface	____
Check SR RF System D HVPS Beamline Interface	A and B Permits ON, SR RF System D HVPS Interface	____
Operator enables SR Dipole PS	SR Dipole PS is ON	____
Operator enables SR RF System C HVPS	SR RF System C HVPS is ON	____
Operator enables SR RF System D HVPS	SR RF System D HVPS is ON	____
Using FE Shutter test fixture, open the FE Shutters (SSA, SSB and Photon)		____
	FE Shutters Open	____
*Remove an "**A chain**" door switch actuator from beamline hutch door*		____
	FOE Interlocked OFF A, HMI	____
	FE Critical Devices Permits A chain OFF, HMI	____
Check I/O Box 17 Beamline Enable Panel	FE Critical Devices Permit A LED OFF	____
Check I/O Box 28 Beamline Enable Panel	FE Critical Device Permit Sum A LED OFF	____
Check Control Room SR HMI (MCR beamline 1)	FE Critical Device Permit A (**red**), SR HMI	____
Check SR RF System C HVPS Beamline Interface	A Permits OFF, SR RF System C HVPS Interface	____
Check SR RF System D HVPS Beamline Interface	A Permits OFF, SR RF System D HVPS Interface	____
Check Dipole PS (positive) Beamline Interface	A Permits OFF, Dipole PS Pos. Interface	____
Check Dipole PS (negative) Beamline Interface	A Permits OFF, Dipole PS Neg. Interface	____
	SR RF System C HVPS is OFF	____
	SR RF System D HVPS is OFF	____
	SR Dipole PS is OFF	____
Close Shutters	Shutters closed	____

Replace A chain door switch holder and reset fault(s)		____
Search hutch		____
	FOE Interlocked A and B ON (**green**), HMI	____
	FE Critical Devices Permits A and B ON (**green**), HMI	____
Check Control Room SR HMI (MCR beamline 1)	FE Critical Device Permit A and B ON (**green**), SR HMI	____
Check I/O Box 17 Beamline Enable Panel	FE Critical Device Permit Sum A and B LEDs ON	____
Check I/O Box 28 Beamline Enable Panel	FE Shutters Closed A and B LEDs ON	____
Check Dipole PS (positive) Beamline Interface	A and B Permits ON, Dipole PS Pos. Interface	____
Check Dipole PS (negative) Beamline Interface	A and B Permits ON, Dipole PS Neg. Interface	____
Check SR RF System C HVPS Beamline Interface	A and B Permits ON, SR RF System C HVPS Interface	____
Check SR RF System D HVPS Beamline Interface	A and B Permits ON, SR RF System D HVPS Interface	____
Operator enables SR Dipole PS	SR Dipole PS is ON	____
Operator enables SR RF System C HVPS	SR RF System C HVPS is ON	____
Operator enables SR RF System D HVPS	SR RF System D HVPS is ON	____
Using FE Shutter test fixture, open the FE Shutters (SSA, SSB and Photon)		____
	FE Shutters Open	____
Remove "**B chain**" switch actuator	FOE Interlocked B OFF, HMI	____
	FE Critical Devices Permits B OFF, HMI	____
Check I/O Box 17 Beamline Enable Panel	FE Critical Devices Permit B LED OFF	____
Check Control Room SR HMI (MCR beamline 1)	FE Critical Device Permits B OFF (**red**), SR HMI	____
Check I/O Box 28 Beamline Enable Panel	FE Critical Device Permit Sum B LED OFF	____
Check SR RF System C HVPS Beamline Interface	B Permits OFF, SR RF System C HVPS Interface	____
Check SR RF System D HVPS Beamline Interface	B Permits OFF, SR RF System D HVPS Interface	____
Check Dipole PS (positive) Beamline Interface	B Permits OFF, Dipole PS Pos. Interface	____
Check Dipole PS (negative) Beamline Interface	B Permits OFF, Dipole PS Neg. Interface	____
	SR Dipole is OFF	____
	SR RF System C HVPS is OFF	____
	SR RF System D HVPS is OFF	____
Close FE Shutters with test fixture		

Remove hutch switch holders and Maglock actuator ____

A15 ***Observe All Shutters Closed Sum***

Check I/O Box 28 Beamline Enable Panel FE Shutters closed A chain light ON ____

FE Shutters closed B chain light ON ____

Using FE Shutter test fixture open both FE SSs and then Photon Shutter ____

FE Shutters open (**green**), HMI ____

Check I/O Box 28 Beamline Enable Panel FE Shutters closed A chain light OFF ____

FE Shutters closed B chain light OFF ____

Close Shutters and remove test device ____

A16 ***Test Completion***

Inspect all hutch doors and labyrinths to ensure all PPS switch and Maglock actuators have been removed ____

Return Beamline enable key and Beamline PPS reset key to the Control Room ____

Remove muffler from beam imminent sounder ____

Ensure PPS cabinets are secure and locked; challenge locks ____

Remove all LOTO ____

Inform Lead Operator that testing is complete ____

- END -

NSLS-II Beamline 7-ID Radiological Interlock Test Checklist

Test Reason: Initial Test	Test Result: ☑ Passed ☐ Failed Test Type: ☐ Pre-Certification ☑ Certification ☐ Partial
Test Date: 1/6/2018	Start Time: Finish Time:
Tester 1: Thomas McDonald; Gabrielle Stine	Assistant 1: Accelerator Operations Staff
Tester 2: Robert Christ; Brian Henevelt	Assistant 2:
Tester 1 Signature: Thomas P McDonald	Tester 2 Signature: R Christ
*Reviewer 1:	Reviewer 1 Signature:
Reviewer 2:	Reviewer 2 Signature:
** Safety Signature 7-ID (Beamline HMI) A Chain: 774D 4489 B Chain: 46E7 6981	Previous 7-ID SS# Date: / / A Chain: B Chain:
** Safety Signature Pentant 3 Beamline (SR HMI) A Chain: E39A 2A12 B Chain: D9B1 829E	Previous Pentant 3 SS# Date: / / A Chain: B Chain:

* A review by an Accelerator Safety Systems Engineer and a designated specialist (Reviewer 2) is only required upon a Test failure.
**If Current Safety Signature number (found in top left corner on HMI) is different from previous number, contact the Accelerator Safety Systems Cognizant Engineer.

PREPARATION:

I. All hutch door switches have been evaluated by NSLS-II Engineering for proper positioning	✓
II. Inform Control Room Lead Operator that testing will be done	✓
III. Obtain Beamline enable and PPS reset keys from Control Room	✓
IV. Verify that beamline vacuum and water interlocks are satisfied	✓
V. 7-ID Beamline Staff close isolation vacuum valves in preparation for vacuum sensor test steps	✓
VI. Place muffler on beam imminent sounder	✓
VII. Request Lead Operator enable Master Shutters	✓

A1 ***Verify System Lockouts***

Gun HVPS Enable Switch	✓
Linac modulator line cords (3) OR Booster Dipole F PS 480 V	✓
Booster RF HVPS 480 V OR Booster low level RF drive termination	✓
SR System C low level RF drive termination OR SR System C RF output connection to cavity	✓
SR System D low level RF drive termination OR SR System D RF output connection to cavity	✓

A2 ***Verify Search and Time Beam Imminent Alarm***

Verify that search path is free from obstacles and line of sight is clear in search mirrors in accordance with PS-C-XFD-PRC-010, *Beamline Enclosure Search and Secure and Breaking Security Procedure* ✓

	A
Close the Right door	✓
"Entry Permitted" sign is ON	✓
Using the keypad, lock the closed doors	✓
Press SB1	✓
SB1 illuminates	✓
Search sounder sounds	✓
Search yellow beacon flashing	✓
Press SB2	✓
SB2 illuminates	✓
Exit hutch and close main door	✓
Press SBE and ***begin timing***	✓
Beam imminent alarm sounds for 30 seconds	✓
After warning, FOE Interlocked A and B ON (**green**), HMI	✓
"Interlocked" sign is ON	✓
Maglock A and B ON (**green**), all doors, HMI	✓
Press the SBE/Access Button	✓
"Interlocked" sign is OFF, "Entry Permitted" sign is ON	✓
FOE Interlocked A and B OFF, HMI	✓
Maglock A OFF (may require opening Maglock on keypad)	✓
Open door	✓
Door opens, Maglock B OFF	✓

A3 ***Out of Sequence Search in the FOE (A Hutch)***

	A
Press SB2	✓
SB2 does not illuminate	✓
Press SB1	✓
SB1 illuminates	✓
Close hutch door and press SBE	✓
Hutch does NOT secure	✓

The only official copy of this document is the one online in the NSLS-II Document and Records Center. Before using a printed copy, verify that it is current by checking the printed document's revision history log with that of the online version.

A4 *Search Timeout*

	A
Press first search button and ***begin timing***	✓
Complete search ***without pressing Final Search button***	✓
Search sounders off in 2 minutes	✓
Press Final Search button	✓
Search does not complete	✓

A5 *Shutter Enable*

Place actuators on FOE door switches and attach Maglock devices.		✓
	Beamline Online A and B OFF	✓
Enable beamline with key and perform a reset	Beamline Online A and B ON (**green**)	✓
Search the FOE	FE Shutter Permits A and B ON ***after*** Beam Imminent Warning	✓
Open FE Shutters	FE Shutters A and B indicate open (**green**)	✓
	2 "Beam On" signs are ON	✓
Close FE Shutters	FE Shutters A and B indicate closed (**red**)	
	2 "Beam On" signs are OFF	✓
	Shutter 1 Permit A and B OFF	✓
Attempt to Open Shutter 1from keypad	Shutter 1 A and B closed (**red**)	✓
Cycle Line 1 Beamline key in place	Shutter 1 Permit A and B ON (**green**)	✓
Open Shutter 1 from keypad	Shutter 1 A and B open (**green**)	✓
Cycle Line 1 Beamline key out of place	Shutter 1 A and B closed (**red**)	✓
	Shutter 1 Permit A and B OFF	✓
	Shutter 4 Permit A and B OFF	✓
Attempt to Open Shutter 4 from keypad	Shutter 4 A and B closed (**red**)	✓
Cycle Line 2 Beamline key in place	Shutter 4 Permit A and B ON (**green**)	✓
Open Shutter 4 from keypad	Shutter 4 A and B open (**green**)	✓
Cycle Line 2 Beamline key out of place	Shutter 4 A and B closed (**red**)	✓
	Shutter 4 Permit A and B OFF	✓
Rotate keys in place to enable both lines	Shutter 1 and 4 Permits A and B ON (**green**)	✓

A6 ***Emergency Stops (ES) FOE (A Hutch)***

For each ES search FOE hutch.	ES1	ES2	ES3
Open FE Shutters from keypad	✓	✓	✓
FE Shutters A and B open (**green**)	✓	✓	✓
FOE Interlocked A and B ON (**green**)	✓	✓	✓
FE Shutter Permits A and B ON (**green**)	✓	✓	✓
FE Critical Device Permits A and B ON	✓	✓	✓
Right Maglock A and B ON (**green**)	✓	✓	✓
Left Maglock A and B ON (**green**)	✓	✓	✓
Press ES	✓	✓	✓
FE Shutters A and B closed (**red**)	✓	✓	✓
FOE Interlocked A and B OFF	✓	✓	✓
FE Shutter Permits A and B OFF	✓	✓	✓
FE Critical Device Permits A and B OFF	✓	✓	✓
Right Maglock A OFF	✓	✓	✓
Left Maglock A OFF	✓	✓	✓
Pull out ES	✓	✓	✓
ES Sum Latch OFF	✓	✓	✓
Reset fault	✓	✓	✓
ES Sum Latch ON (**green**)	✓	✓	✓

A7 ***FOE Labyrinth 1 Switches and Latches***

Place actuators on the door switches and Maglock. ✓

Check the corresponding Permits for each switch tested (e.g., A Permit for switch A1).

	A	B	Latch
Search hutch	✓	✓	✓
Open FE Shutters from keypad	✓	✓	✓
FE Shutters A and B open (**green**)	✓	✓	✓
FOE Interlocked A and B ON (**green**)	✓	✓	✓
FE Shutter Permits A and B ON (**green**)	✓	✓	✓
Cable Lab 1 Switches/Latch A and B ON (**green**)	✓	✓	✓
FE Critical Device Permits A and B ON	✓	✓	✓

Remove one switch actuator	✓	✓	✓
FE Shutter A and B closed (**red**)	✓	✓	✓
FOE Interlocked OFF	✓	✓	✓
FE Shutter Permit OFF	✓	✓	✓
Cable Lab 1 Switch/Latch Permit OFF	✓	✓	✓
FE Critical Device Permits A and B OFF	✓	✓	✓
Replace switch actuator and reset fault	✓	✓	✓
Remove labyrinth actuators and close labyrinth door			✓

A8 ***FOE Right Door Switches*** ✓

Place actuators on the door switches and Maglock.

Check the corresponding Permits for each switch tested (e.g., A Permit for switch A1).

	A	B	Reed
Search hutch	✓	✓	✓
Open FE Shutters from keypad	✓	✓	✓
FE Shutters A and B open (**green**)	✓	✓	✓
FOE Interlocked A and B ON (**green**)	✓	✓	✓
FE Shutter Permits A and B ON (**green**)	✓	✓	✓
FOE Door Switch Sum A and B ON (**green**)	✓	✓	✓
FE Critical Device Permits A and B ON	✓	✓	✓
Remove one switch actuator	✓	✓	✓
FE Shutters A and B closed (**red**)	✓	✓	✓
FOE Interlocked OFF	✓	✓	✓
FE Shutter Permit OFF	✓	✓	✓
FOE Door Switch Sum OFF	✓	✓	✓
FE Critical Device Permits A and B OFF	✓	✓	✓
Replace switch actuator and reset fault	✓	✓	✓
Remove actuators and close door			✓

A9 ***FOE Left Door Switches*** ✓

Place actuators on the door switches and Maglock.

Check the corresponding Permits for each switch tested (e.g., A Permit for switch A1).

	A	B	Reed
Search hutch	✓	✓	✓
Open FE Shutters from keypad	✓	✓	✓
FE Shutters A and B open (**green**)	✓	✓	✓
FOE Interlocked A and B ON (**green**)	✓	✓	✓
FE Shutter Permits A and B ON (**green**)	✓	✓	✓
FOE Door Switch Sum A and B ON (**green**)	✓	✓	✓
FE Critical Device Permits A and B ON	✓	✓	✓
Remove one switch actuator	✓	✓	✓
FE Shutters A and B closed (**red**)	✓	✓	✓
FOE Interlocked OFF	✓	✓	✓
FE Shutter Permit OFF	✓	✓	✓
FOE Door Switch Sum OFF	✓	✓	✓
FE Critical Device Permits A and B OFF	✓	✓	✓
Replace switch actuator and reset fault	✓	✓	✓
Remove actuators and close door			✓

A10 ***Magnetic Lock Test (FOE)***

Connect the FOE test box to the PPS cabinet. Use the box to turn ON the Maglocks (set switches to "Normal"). ✓

Repeat steps for each door: Right (R) and Left (L).

	R	L
Search hutch	✓	✓
FOE Interlocked A and B ON (**green**)	✓	✓
FE Shutter Permits A and B ON (**green**)	✓	✓
Door Maglock A and B ON (**green**)	✓	✓
Open FE Shutters	✓	✓
FE Shutters open (**green**)	✓	✓
Using FOE test box, turn OFF Maglock	✓	✓
Door Maglock A OFF	✓	✓
FE Shutters closed (**red**)	✓	✓
FOE Interlocked A OFF	✓	✓
FE Shutter Permit A OFF	✓	✓

Turn On Maglock and reset fault	✓	✓
Search hutch	✓	✓
Using FE Shutter test fixture, Open FE Shutters	✓	✓
FE Critical Device Permits A and B ON	✓	✓
Using FOE test box, turn OFF Maglock	✓	✓
Within 3 seconds: FE Critical Device Permit A Chain OFF	✓	✓
Close FE Shutters and reset fault	✓	✓
Disconnect FOE test box		✓

A11 ***Vacuum Sensors Beamline SW3***

Qualified Beamline Staff will perform vacuum venting.

	SW3
Note: *Shutter 6 to be installed in 2018.**	
Vacuum sensor SW A and B ON (**green**)	✓
Shutter 3 Permits A and B ON (**green**)	✓
*Shutter 6 Permits A and B ON (**green**)	✓
**Open Beamline Photon Shutters 3 and 6*	✓* See NOTE Y.M 1/6/18
Shutter 3 open (**green**)	✓
*Shutter 6 open (**green**)	* See NOTE Y.M 1/6/18
Beamline Staff vents up section	✓
Vacuum sensor SW A and B OFF	✓
Shutter 3 closed	✓
*Shutter 6 closed	* See NOTE Y.M 1/6/18
Shutter 3 Permits A and B OFF	✓
*Shutter 6 Permits A and B OFF	✓
FE Critical Device Permits A and B ON	✓
Open All upstream Shutters from Shutter 3 with test devices	✓
All upstream Shutters open	✓
FE Critical Device Permits A and B OFF	✓
Close All Shutters and reset FE Critical Devices Fault	✓
FE Critical Device Permits A and B ON	✓
**Open All upstream Shutters from Shutter 6 with test devices*	* } See NOTE Y.M 1/6/18
*All upstream Shutters open	*
*FE Critical Device Permits A and B OFF	*

Close All Shutters and reset FE Critical Devices Fault	* See NOTE on page 7 T.M 1/6/18
FE Critical Device Permits A and B ON	*
Beamline Staff returns vacuum	✓
Vacuum sensor SW A and B ON (**green**)	✓
Shutter 3 Permits A and B OFF	✓
*Shutter 6 Permits A and B OFF	✓ * See NOTE on page 7 T.M 1/6/18
Reset fault	✓
Shutter 3 Permits A and B ON (**green**)	✓
*Shutter 6 Permits A and B ON (**green**)	✓

A12 ***Vacuum Sensors Beamline SW 2***

Qualified Beamline Staff will perform vacuum venting.

	SW2
Vacuum sensor SW A and B ON (**green**)	✓
Shutter 2 Permits A and B ON (**green**)	✓
Shutter 5 Permits A and B ON (**green**)	✓
Open Beamline Photon Shutters 2 and 5	✓
Shutter 2 open (**green**)	✓
Shutter 5 open (**green**)	✓
Beamline Staff vents up section	✓
Vacuum sensor SW A and B OFF	✓
Shutter 2 closed	✓
Shutter 5 closed	✓
Shutter 2 Permits A and B OFF	✓
Shutter 5 Permits A and B OFF	✓
FE Critical Device Permits A and B ON	✓
Open All upstream Shutters from Shutter 2 with test devices	✓
All upstream Shutters open	✓
FE Critical Device Permits A and B OFF	✓
Close All Shutters and reset FE Critical Devices Fault	✓
FE Critical Device Permits A and B ON	✓
Open All upstream and FE Shutters with test devices	✓

All upstream Shutters open	✓
FE Critical Device Permits A and B OFF	✓
Close All Shutters and reset FE Critical Devices Fault	✓
FE Critical Device Permits A and B ON	✓
Beamline Staff returns vacuum	✓
Vacuum sensor SW A and B ON (**green**)	✓
Shutter 2 Permits A and B OFF	✓
Shutter 5 Permits A and B OFF	✓
Reset fault	✓
Shutter 2 Permits A and B ON (**green**)	✓
Shutter 5 Permits A and B ON (**green**)	✓

A13 ***Vacuum Sensors Beamline SW1 and SW8***

Qualified Beamline Staff will perform vacuum venting.

Repeat steps for each vacuum switch.	**SW1**	**SW8**
Vacuum sensor SW A and B ON (**green**)	✓	✓
Shutter 1 Permits A and B ON (**green**)	✓	✓
Open Beamline Photon Shutter 1	✓	✓
Shutter 1 open (**green**)	✓	✓
Beamline Staff vents up section	✓	✓
Vacuum sensor SW A and B OFF	✓	✓
Shutter 1 closed	✓	✓
Shutter 1 Permits A and B OFF	✓	✓
FE Critical Device Permits A and B ON	✓	✓
Open Shutter 1 and FE Shutters with test devices	✓	✓
Shutter 1 and FE Shutters open	✓	✓
FE Critical Device Permits A and B OFF	✓	✓
Close All Shutters and reset FE Critical Devices Fault	✓	✓
FE Critical Device Permits A and B ON	✓	✓
Beamline Staff returns vacuum	✓	✓
Vacuum sensor SW A and B ON (**green**)	✓	✓
Shutter 1 Permits A and B OFF	✓	✓

Reset fault	✓	✓
Shutter 1 Permits A and B ON (**green**)	✓	✓

A14 ***Vacuum Sensors Beamline SW7***

Qualified Beamline Staff will perform vacuum venting.

	SW7
Vacuum sensor SW A and B ON (**green**)	✓
Shutter 9 Permits A and B ON (**green**)	✓
Open Beamline Photon Shutter 9	✓
Shutter 9 open (**green**)	✓
Beamline Staff vents up section	✓
Vacuum sensor SW A and B OFF	✓
Shutter 9 closed	✓
Shutter 9 Permits A and B OFF	✓
FE Critical Device Permits A and B ON	✓
Open All upstream and FE Shutters with test devices	✓
All upstream Shutters open	✓
FE Critical Device Permits A and B OFF	✓
Close All Shutters and reset FE Critical Devices Fault	✓
FE Critical Device Permits A and B ON	✓
Beamline Staff returns vacuum	✓
Vacuum sensor SW A and B ON (**green**)	✓
Shutter 9 Permits A and B OFF	✓
Reset fault	✓
Shutter 9 Permits A and B ON (**green**)	✓

A15 ***Vacuum Sensors Beamline SW6***

Qualified Beamline Staff will perform vacuum venting.

	SW6
Vacuum sensor SW A and B ON (**green**)	✓
Shutter 8 Permits A and B ON (**green**)	✓
Open Beamline Photon Shutter 8	✓
Shutter 8 open (**green**)	✓

Beamline Staff vents up section	✓
Vacuum sensor SW A and B OFF	✓
Shutter 8 closed	✓
Shutter 8 Permits A and B OFF	✓
FE Critical Device Permits A and B ON	✓
Open All upstream and FE Shutters with test devices	✓
All upstream Shutters open	✓
FE Critical Device Permits A and B OFF	✓
Close All Shutters and reset FE Critical Devices Fault	✓
FE Critical Device Permits A and B ON	✓
Beamline Staff returns vacuum	✓
Vacuum sensor SW A and B ON (**green**)	✓
Shutter 8 Permits A and B OFF	✓
Reset fault	✓
Shutter 8 Permits A and B ON (**green**)	✓

A16 ***Vacuum Sensors Beamline SW11 and SW5***

Qualified Beamline Staff will perform vacuum venting.

Repeat steps for each vacuum switch.	SW11	SW5
Vacuum sensor SW A and B ON (**green**)	✓	✓
Shutter 7 Permits A and B ON (**green**)	✓	✓
Open Beamline Photon Shutter 7	✓	✓
Shutter 7 open (**green**)	✓	✓
Beamline Staff vents up section	✓	✓
Vacuum sensor SW A and B OFF	✓	✓
Shutter 7 closed	✓	✓
Shutter 7 Permits A and B OFF	✓	✓
FE Critical Device Permits A and B ON	✓	✓
Open All upstream and FE Shutters with test devices	✓	✓
All upstream Shutters open	✓	✓
FE Critical Device Permits A and B OFF	✓	✓

Close All Shutters and reset FE Critical Devices Fault	✓	✓
FE Critical Device Permits A and B ON	✓	✓
Beamline Staff returns vacuum	✓	✓
Vacuum sensor SW A and B ON (**green**)	✓	✓
Shutter 7 Permits A and B OFF	✓	✓
Reset fault	✓	✓
Shutter 7 Permits A and B ON (**green**)	✓	✓

A17 ***Vacuum Sensors Beamline SW4 and SW9***

Qualified Beamline Staff will perform vacuum venting.

Repeat steps for each vacuum switch.	**SW4**	**SW9**
Vacuum sensor SW A and B ON (**green**)	✓	✓
Shutter 4 Permits A and B ON (**green**)	✓	✓
Open Beamline Photon Shutter 4	✓	✓
Shutter 4 open (**green**)	✓	✓
Beamline Staff vents up section	✓	✓
Vacuum sensor SW A and B OFF	✓	✓
Shutter 4 closed	✓	✓
Shutter 4 Permits A and B OFF	✓	✓
FE Critical Device Permits A and B ON	✓	✓
Open Shutter 4 and FE Shutters with test devices	✓	✓
Shutter 4 and FE Shutters open	✓	✓
FE Critical Device Permits A and B OFF	✓	✓
Close All Shutters and reset FE Critical Devices Fault	✓	✓
FE Critical Device Permits A and B ON	✓	✓
Beamline Staff returns vacuum	✓	✓
Vacuum sensor SW A and B ON (**green**)	✓	✓
Shutter 4 Permits A and B OFF	✓	✓
Reset fault	✓	✓
Shutter 4 Permits A and B ON (**green**)	✓	✓

A18 ***FOE Water Interlock***

FOE Water flow meters for the PPS are located on top of the hutch.

The PPS FOE Water Safety Test Amplifiers (STA) are located in the cabinet to the upper right of the meters on top of the hutch.

Meter Reading	Meter Reading	Current STA A	Current STA B
A1= 1.77	B1= 0.64	A STA1= 1.73	B STA1= 1.76
A2= 1.82	B2= 0.64	A STA2= 0.63	B STA2= 0.64

The current programmed trip settings for the amplifiers are in column 1. The STA readouts for each tested A and B chain STAs will be recorded in columns 3 and 4. These recordings should be within 15% of the programmed trip point (column 2).

Trip Points	Trip Points (- 15 %)	Recorded A Trip	Recorded B Trip
PPS 1: 1.3 GPM	1.1 GPM	A STA1= 1.3	B STA1= 1.3
PPS 2: 0.5 GPM	0.43 GPM	A STA2= 0.5	B STA2= 0.5

Repeat each step for all water flow meters	PPS1	PPS2
Open FE Shutters	✓	✓
FE Shutters A and B open (**green**)	✓	✓
FOE Water Permits A and B ON (**green**), HMI	✓	✓
FE Shutter Permits A and B ON (**green**), HMI	✓	✓
Using the valve, lower water flow to trip point	✓	✓
FE Shutters A and B closed (**red**)	✓	✓
In 5 seconds: FE Shutter Permits A and B OFF, HMI	✓	✓
FOE Water Permits A and B OFF, HMI	✓	✓
Recorded STA A and B levels above; within 15%	✓	✓
Return water flow to pretest values	✓	✓
FOE Water Permits A and B remain OFF, HMI	✓	✓
Reset fault at PPS cabinet	✓	✓
FOE Water Permits A and B ON (**green**), HMI	✓	✓
FE Shutter Permits A and B ON (**green**), HMI	✓	✓

A19 ***FOE Water Safety Test Amplifier Faults***

Repeat each step for all water flow meters.	PPS1	PPS2
Open FE Shutters with keypad	✓	✓
FE Shutters A and B open (**green**)	✓	✓
FOE Water Permits A and B ON (**green**), HMI	✓	✓
FE Shutter Permits A and B ON (**green**), HMI	✓	✓
Press A chain fault/reset button	✓	✓
FE Shutters A and B closed (**red**)	✓	✓
FOE Water Permit A OFF, HMI	✓	✓
In 5 seconds: FE Shutter Permit A OFF, HMI	✓	✓
Reset fault	✓	✓
Open FE Shutters with keypad	✓	✓
FE Shutters A and B open (**green**)	✓	✓
FOE Water Permits A and B ON (**green**), HMI	✓	✓
FE Shutter Permits A and B ON (**green**), HMI	✓	✓
Press B chain fault/reset button	✓	✓
FE Shutters A and B closed (**red**)	✓	✓
FOE Water Permit B OFF, HMI	✓	✓
In 5 seconds: FE Shutter Permit B OFF, HMI	✓	✓
Reset fault	✓	✓

A20 ***Auxiliary Water Interlock***

Auxiliary water flow meters for the PPS are located downstream of the FOE.

The Auxiliary PPS Water Safety Test Amplifiers (STA) are located in the cabinet located downstream of the FOE.

Meter Reading	Meter Reading	Current STA A	Current STA B
A1= 0.83	B1= 0.79	A STA1= 0.83	B STA1= 0.79
A2= 0.89	B2= 0.87	A STA2= 0.89	B STA2= 0.87

The current programmed trip settings for the amplifiers are in column 1. The STA readouts for each tested A and B chain STAs will be recorded in columns 3 and 4. These recordings should be within 15% of the programmed trip point (column 2).

Trip Points	Trip Points (- 15 %)	Recorded A Trip	Recorded B Trip
AUX 1: 0.6 GPM	0.51 GPM	A STA1= 0.6	B STA1= 0.6
AUX 2: 0.5 GPM	0.43 GPM	A STA2= 0.5	B STA2= 0.5

Repeat each step for all water flow meters.	AUX 1	AUX 2
Open Photon Shutter 1 for AUX1, Shutter 4 for AUX2	✓	✓
Shutters A and B open (**green**)	✓	✓
AUX Water Permits A and B ON (**green**), HMI	✓	✓
Shutter Permits A and B ON (**green**), HMI	✓	✓
Using the valve, lower water flow to trip point	✓	✓
Shutters A and B closed (**red**)	✓	✓
Shutter Permits A and B OFF, HMI	✓	✓
AUX Water Permits A and B OFF, HMI	✓	✓
Recorded STA A and B levels above; within 15%	✓	✓
Return water flow to pretest values	✓	✓
AUX Water Permits A and B remain OFF, HMI	✓	✓
Reset fault at PPS cabinet	✓	✓
AUX Water Permits A and B ON (**green**), HMI	✓	✓
Shutter Permits A and B ON (**green**), HMI	✓	✓

A21 ***Auxiliary Water Safety Test Amplifier Faults***

Repeat each step for all water flow meters.	AUX 1	AUX2
Open Photon Shutter 1 for AUX1, Shutter 4 for AUX2	✓	✓
Shutters A and B open (**green**)	✓	✓
AUX Water Permits A and B ON (**green**), HMI	✓	✓
Shutter Permits A and B ON (**green**), HMI	✓	✓
Press A chain fault/reset button	✓	✓
Shutters A and B closed (**red**)	✓	✓
AUX Water Permit A OFF, HMI	✓	✓
Shutter Permit A OFF, HMI	✓	✓
Reset fault	✓	✓
Open FE Shutters with keypad	✓	✓
Shutters A and B open (**green**)	✓	✓
AUX Water Permits A and B ON (**green**), HMI	✓	✓
Shutter Permits A and B ON (**green**), HMI	✓	✓
Press B chain fault/reset button	✓	✓
Shutters A and B closed (**red**)	✓	✓

AUX Water Permit B OFF, HMI	✓	✓
Shutter Permit B OFF, HMI	✓	✓
Reset fault	✓	✓

A22 ***PPS Aperture***

The PPS Aperture Transmitter meters are located inside the FOE. The STAs are located in the PPS cabinet outside of the FOE. NOTE: PPS Aperture device not yet installed T.M 1/6/18

Record the Transmitter meter readings (absolute pressure).

Meter Reading	Meter Reading	Current STA A	Current STA B
A1= 19.0	B1= 19.0	A STA1= 19.0	B STA1= 19.0

Qualified Beamline Staff will adjust the valve to lower the absolute pressure (trip point at 18 psia).

Open FE Shutters	✓		
FE Shutters A and B open (**green**)	✓		
Aperture Low Press. A and B ON (**green**), HMI	✓		
FE Critical Device Permits A and B ON (**green**), HMI	✓		
Using the valve, lower pressure to below trip point at 18 psia	✓		
Both A and B chains trip within 5% of 18 psia (>17.1)	✓	A= 18.0	B= 18.0
FE Shutters A and B closed (**red**)	✓		
FE Critical Device Permits A and B OFF, HMI	✓		
Aperture Low Press. A and B OFF, HMI	✓		
Qualified Beamline Staff return pressure to pretest values	✓		
Aperture Low Press. A and B ON (**green**), HMI	✓		
Reset fault at I/O Box	✓		
FE Critical Device Permits A and B ON (**green**), HMI	✓		

A23 ***PPS Aperture (Module Fault)***

Repeat for A and B chain STAs.	**A1**	**B1**
Open FE Shutters	✓	✓
FE Shutters A and B open (**green**)	✓	✓
Aperture Module Fault A and B ON (**green**), HMI	✓	✓
FE Critical Device Permits A and B ON (**green**), HMI	✓	✓
Generate a trip amplifier fault	✓	✓
FE Shutters A and B closed (**red**)	✓	✓

FE Critical Device Permits A and B OFF, HMI	✓	✓
Aperture Module Fault OFF (**red**), HMI	✓	✓
Return trip amplifier to operating condition	✓	✓
Aperture Module Fault A and B ON (**green**), HMI	✓	✓
Reset fault at I/O box	✓	✓
FE Critical Device Permits A and B ON (**green**), HMI	✓	✓

A24 ***Observe Beamline Photon Shutter Operation***

	S1	S2	S3	S4
Close Beamline Photon Shutter	✓	✓	✓	✓
Shutter indicates closed A and B (**red**), HMI	✓	✓	✓	✓
Open Beamline Photon Shutter	✓	✓	✓	✓
Shutter opens smoothly without hesitation	✓	✓	✓	✓
Shutter indicates open A and B (**green**), HMI	✓	✓	✓	✓
Close Beamline Photon Shutter	✓	✓	✓	✓
Shutter indicates closed A and B (**red**), HMI	✓	✓	✓	✓

Note: *Shutter 6 to be installed in 2018.**

	S5	S6*	S7	S8
Close Beamline Photon Shutter	✓	* TM 1/6/18	✓	✓
Shutter indicates closed A and B (**red**), HMI	✓	* TM 1/6/18	✓	✓
Open Beamline Photon Shutter	✓	* TM 1/6/18	✓	✓
Shutter opens smoothly without hesitation	✓	* TM 1/6/18	✓	✓
Shutter indicates open A and B (**green**), HMI	✓	* TM 1/6/18	✓	✓
Close Beamline Photon Shutter	✓	* TM 1/6/18	✓	✓
Shutter indicates closed A and B (**red**), HMI	✓	* TM 1/6/18	✓	✓

	S9
Close Beamline Photon Shutter	✓
Shutter indicates closed A and B (**red**), HMI	✓
Open Beamline Photon Shutter	✓
Shutter opens smoothly without hesitation	✓
Shutter indicates open A and B (**green**), HMI	✓
Close Beamline Photon Shutter	✓
Shutter indicates closed A and B (**red**), HMI	✓

A25 ***Observe FE Safety Shutter(s) Operation***

With Maintenance Door open, connect FE Shutter test fixture.		✓
	Shutters are in the closed (down) position	✓
	FE Shutters A and B closed (**red**), HMI	✓
Turn the "Air" switch ON		✓
Open FE Photon Shutter and SSs A and B	Shutters open freely without hesitation	✓
	Shutters are in the open (up) position	✓
	FE Shutters A and B open (**green**), HMI	✓
Actuate Shutters closed	FE Shutters A and B closed (**red**), HMI	✓

A26 ***FE Safety Shutters can only be Closed if FE Photon Shutter is Closed***

Search hutch	FOE Interlocked A and B ON (**green**), HMI	✓
	FE Critical Device Permits A and B ON (**green**), HMI	✓
Open FE SSA	SSA Open	✓
Open FE Photon Shutter	FE Critical Device Permits A and B OFF, HMI	✓
Close Shutters		✓
Reset fault	FE Critical Device Permits A and B ON (**green**), HMI	✓
Open FE SSB	SSB Open	✓
Open FE Photon Shutter	FE Critical Device Permits A and B OFF, HMI	✓
Close Shutters		✓
Reset fault	FE Critical Device Permits A and B ON (**green**), HMI	✓

A27 ***Beamline Enable Key (Opening Shutter Without Key Trips SR RF and Dipole PS)***

Remove beamline enable key	Beamline Online A and B OFF	✓
Search FOE	FOE Interlocked A and B ON (**green**), HMI	✓
	FE Critical Device Permits A and B ON (**green**), HMI	✓
Using FE Shutter test fixture, Open FE Shutters	FE Critical Device Permits A and B OFF	✓
Using FE Shutter test fixture, Close FE Shutters		✓
Replace beamline enable key and reset faults	Beamline Online A and B ON (**green**)	✓
	FE Critical Device Permits A and B ON (**green**), HMI	✓

Live Testing

A28 ***Reach Back FOE Door Switches***

Secure P1 through P5	SR Secure, A and B chain, SR HMI	✓
Place actuators on FOE hutch door switches and Maglock.		✓
Search hutch	FOE Interlocked A and B ON (**green**), HMI	✓
	FE Critical Device Permits A and B ON (**green**), HMI	✓
Check Control Room SR HMI (MCR beamline 1)	FE Critical Device Permit A and B ON (**green**), SR HMI	✓
Check I/O Box 7 Beamline Enable Panel	FE Critical Device Permits A and B LEDs ON	✓
Check I/O Box 28 Beamline Enable Panel	FE Critical Device Permit Sum A and B LEDs ON	✓
Check Dipole PS (positive) Beamline Interface	A and B Permits ON, Dipole PS Pos. Interface	✓
Check Dipole PS (negative) Beamline Interface	A and B Permits ON, Dipole PS Neg. Interface	✓
Check SR RF System C HVPS Beamline Interface	A and B Permits ON, SR RF System C HVPS Interface	✓
Check SR RF System D HVPS Beamline Interface	A and B Permits ON, SR RF System D HVPS Interface	✓
Operator enables SR Dipole PS	SR Dipole PS is ON	✓
Operator enables SR RF System C HVPS	SR RF System C HVPS is ON	✓
Operator enables SR RF System D HVPS	SR RF System D HVPS is ON	✓
Using FE Shutter test fixture, open the FE Shutters (SSA, SSB and Photon)		✓
	FE Shutters open	✓
Remove an "***A chain***" door switch actuator from beamline hutch door		✓
	FOE Interlocked A OFF, HMI	✓
	FE Critical Device Permit A chain OFF, HMI	✓
Check I/O Box 7 Beamline Enable Panel	FE Critical Device Permit A LED OFF	✓
Check I/O Box 28 Beamline Enable Panel	FE Critical Device Permit Sum A LED OFF	✓
Check Control Room SR HMI (MCR beamline 1)	FE Critical Device Permit A OFF (**red**), SR HMI	✓
Check SR RF System C HVPS Beamline Interface	A Permit OFF, SR RF System C HVPS Interface	✓
Check SR RF System D HVPS Beamline Interface	A Permit OFF, SR RF System D HVPS Interface	✓
Check Dipole PS (positive) Beamline Interface	A Permit OFF, Dipole PS Pos. Interface	✓
Check Dipole PS (negative) Beamline Interface	A Permit OFF, Dipole PS Neg. Interface	✓
	SR RF System C HVPS is OFF	✓
	SR RF System D HVPS is OFF	✓

	SR Dipole PS is OFF	✓
Close FE Shutters with FE Shutter test fixture	FE Shutters closed	✓
Replace "***A chain***" door switch actuator and reset fault(s)		✓
Search hutch		✓
	FOE Interlocked A and B ON (**green**), HMI	✓
	FE Critical Device Permits A and B ON (**green**), HMI	✓
Check Control Room SR HMI (MCR beamline 1)	FE Critical Device Permit A and B ON (**green**), SR HMI	✓
Check I/O Box 7 Beamline Enable Panel	FE Critical Device Permits A and B LEDs ON	✓
Check I/O Box 28 Beamline Enable Panel	FE Critical Device Permit Sum A and B LEDs ON	✓
Check Dipole PS (positive) Beamline Interface	A and B Permits ON, Dipole PS Pos. Interface	✓
Check Dipole PS (negative) Beamline Interface	A and B Permits ON, Dipole PS Neg. Interface	✓
Check SR RF System C HVPS Beamline Interface	A and B Permits ON, SR RF System C HVPS Interface	✓
Check SR RF System D HVPS Beamline Interface	A and B Permits ON, SR RF System D HVPS Interface	✓
Operator enables SR Dipole PS	SR Dipole PS is ON	✓
Operator enables SR RF System C HVPS	SR RF System C HVPS is ON	✓
Operator enables SR RF System D HVPS	SR RF System D HVPS is ON	✓
Using FE Shutter test fixture, open the FE Shutters (SSA, SSB and Photon)		✓
	FE Shutters open	✓
Remove "***B chain***" switch actuator	FOE Interlocked B OFF, HMI	✓
	FE Critical Device Permit B chain OFF, HMI	✓
Check I/O Box 7 Beamline Enable Panel	FE Critical Device Permit B LED OFF	✓
Check Control Room SR HMI (MCR beamline 1)	FE Critical Device Permit B OFF (**red**), SR HMI	✓
Check I/O Box 28 Beamline Enable Panel	FE Critical Device Permit Sum B LED OFF	✓
Check SR RF System C HVPS Beamline Interface	B Permit OFF, SR RF System C HVPS Interface	✓
Check SR RF System D HVPS Beamline Interface	B Permit OFF, SR RF System D HVPS Interface	✓
Check Dipole PS (positive) Beamline Interface	B Permit OFF, Dipole PS Pos. Interface	✓
Check Dipole PS (negative) Beamline Interface	B Permit OFF, Dipole PS Neg. Interface	✓
	SR Dipole PS is OFF	✓
	SR RF System C HVPS is OFF	✓
	SR RF System D HVPS is OFF	✓

Close FE Shutters with FE Shutter test fixture	FE Shutters closed	✓
Remove beamline hutch switch actuators and Maglock actuator		✓

A29 ***Water Interlock (Live)***

Search FOE	FOE Interlocked A and B ON (**green**), HMI	✓
	FE Shutter Permits A and B ON (**green**), HMI	✓
	FE Critical Device Permits A and B ON (**green**), HMI	✓
Check I/O Box 7 Beamline Enable Panel	FE Critical Device Permits A and B LEDs ON	✓
Check I/O Box 28 Beamline Enable Panel	FE Critical Device Permit Sum A and B LEDs ON	✓
Check Control Room SR HMI (MCR beamline 1)	FE Critical Device Permit A and B ON (**green**), SR HMI	✓
Check Dipole PS (positive) Beamline Interface	A and B Permits ON, Dipole PS Pos. Interface	✓
Check Dipole PS (negative) Beamline Interface	A and B Permits ON, Dipole PS Neg. Interface	✓
Check SR RF System C HVPS Beamline Interface	A and B Permits ON, SR RF System C HVPS Interface	✓
Check SR RF System D HVPS Beamline Interface	A and B Permits ON, SR RF System D HVPS Interface	✓
Operator enables SR Dipole PS	SR Dipole PS is ON	✓
Operator enables SR RF System C HVPS	SR RF System C HVPS is ON	✓
Operator enables SR RF System D HVPS	SR RF System D HVPS is ON	✓
Using FE Shutter test fixture, turn on air and open Photon then SSs		
	FE Shutters indicate open (**green**), HMI	✓
Using water trip points in Step A18, lower flow to one meter		✓
	Water Permits A and B OFF, HMI	✓
	FE Shutter Permits A and B OFF, HMI	✓
Within 5 seconds	FE Critical Device Permits A and B OFF, HMI	✓
Check I/O Box 7 Beamline Enable Panel	FE Critical Device Permits A and B LEDs OFF	✓
Check I/O Box 28 Beamline Enable Panel	FE Critical Device Permit Sum A and B LEDs OFF	✓
Check Control Room SR HMI (MCR beamline 1)	FE Critical Device Permit A and B OFF, SR HMI	✓
Check SR RF System C HVPS Beamline Interface	A and B Permits OFF, SR RF System C HVPS Interface	✓
Check SR RF System D HVPS Beamline Interface	A and B Permits OFF, SR RF System D HVPS Interface	✓
Check Dipole PS (positive) Beamline Interface	A and B Permits OFF, Dipole PS Pos. Interface	✓
Check Dipole PS (negative) Beamline Interface	A and B Permits OFF, Dipole PS Neg. Interface	✓

	SR RF System C HVPS is OFF	✓
	SR RF System D HVPS is OFF	✓
	SR Dipole PS is OFF	✓
Close FE Shutters with FE Shutter test fixture	FE Shutters closed	✓
Return water flow to recorded level		✓
Reset fault(s)		✓

A30 ***Observe All Shutters Closed Sum***

Check I/O Box 28 Beamline Enable Panel	FE Shutters closed A chain light ON	✓
	FE Shutters closed B chain light ON	✓
Using FE Shutter test fixture open both FE SSs and then Photon Shutter		✓
	FE Shutters open (**green**), HMI	✓
Check I/O Box 28 Beamline Enable Panel	FE Shutters closed A chain light OFF	✓
	FE Shutters closed B chain light OFF	✓
Close FE Shutters and remove FE Shutter test fixture		✓

A31 ***FOE Area Radiation Monitor***

Refer to PS-C-ASD-PRC-008, *NSLS-II Area Radiation Monitor PPS Test* and complete Attachment D, *NSLS-II Beamline (FOE) Area Radiation Monitor Checklist.*

FRM 7-ID Test Checklist Completed	✓

A32 ***Test Completion***

Inspect all hutch doors and labyrinths to ensure all PPS switch and Maglock actuators have been removed	✓
Return Beamline enable key and Beamline PPS reset key to the Control Room	✓
Remove muffler from beam imminent sounder	✓
Ensure PPS cabinets are secure and locked; challenge locks	✓
Remove all LOTO	✓
Inform Lead Operator that testing is complete	✓

-END-

Attachment D
NSLS-II Beamline (FOE) Area Radiation Monitor Checklist

Note: Signatures below indicate that the test has been completed.

Monitor # FRM ID 7	**ID #** IN07650	**Beamline:** 7-ID (DET # IN07649)
Test Reason: ☑ **Beamline Certification** ☐ **Replacement/Repair**		
Test Date: 1/6/18	**Test Result** ☑ **Passed** ☐ **Failed**	
Tester : Thomas McDonald	**RCD:** SHARON BUCKALEW	
Tester Signature: Thomas McDonald	**RCD Signature:**	

Fail Alarm: Place checkmark (✓) in checkbox (☐) for each correct response.

	Local Expected Observation	HMI/CR Expected Observation	Linac HMI	CR HMI
Operator turns on Gun	Gun HVPS is ON ☑	Gun Contactor ON A Chain	☑	☑
RCD Disables Monitor		Alarm sounds in Control Room		☑
	Fail alarm ON HMI (yellow border around ARM icon)		☑	☑
Silence CR Alarm		Alarm silences		☑
Gun turns OFF	Gun HVPS is OFF ☑	Gun Contactor OFF A Chain	☑	☑
Return monitor to normal	Gun HVPS remains OFF ☑	Fail alarm remains ON HMI	☑	☑
Reset fault in Control Room		Monitor normal HMI	☑	☑
RCD ensures ARM is locked	ARM is locked ☑			

Low Alarm: Place checkmark (✓) in checkbox (☐) for each correct response.

	Local Expected Observation	HMI/CR Expected Observation	Beamline HMI	CR HMI/EPICS
Opens FE shutter (w/keypad)	FE Shutters open ☑		☑	☑
Apply source until low alarm	Yellow light on Monitor ☑	Radiation level increases on EPICS		☑
	FE Shutters Closed ☑	Alarm sounds in Control Room		☑
		Low level alarm ON, HMI	☑	☑
Return monitor to normal		Monitor normal, HMI	☑	☑
	FE Critical Device Permit A chain ON		☑	☑
Apply source until low alarm	Yellow light on Monitor ☑			☑
	FE Critical Device Permit A chain OFF		☑	☑
Return monitor to normal		Monitor normal, HMI	☑	☑

High Alarm: Place checkmark (✓) in checkbox (☐) for each correct response.

	Local Expected Observation	HMI/CR Expected Observation	Linac HMI	CR HMI/EPICS
Operator turns on Gun	Gun HVPS is ON ☑	Gun Contactor ON A Chain	☑	☑
Apply source until high alarm	Red light on Monitor ☑	Radiation level increases on EPICS		☑
	Monitor alarm sounds	Alarm sounds in Control Room		☑
		High level alarm ON, HMI	☑	☑
Silence Alarm		Alarm silences		☑
Gun turns OFF	Gun HVPS is OFF ☑	Gun Contactor OFF A Chain	☑	☑
Return monitor to normal	Gun HVPS remains OFF ☑	High level alarm remains ON, HMI	☑	☑
Reset fault in Control Room		Monitor normal, HMI	☑	☑

Description of Test Failures (if any):_____

Addendum to 7-ID Initial Radiological Interlock test Certification (Certified January 2018)

A1 PPS Aperture

Record the Transmitter meter readings (absolute pressure):

Meter Reading	Meter Reading	Current STA A	Current STA B
A1= 31.89	B1= 31.92	A STA1= 31.9	B STA1= 31.9

Qualified Beamline Staff will adjust the valve to lower the absolute pressure (trip point at 18 psia).

Aperture Low Press. A and B ON (**green**), HMI ✓

Using the valve, turn to below trip point (18 psia) ✓

Both A and B chains trip within 5% of 18 psia (>17.1) STA (psia) **A** 18 **B** 18 ✓

Aperture Low Press. A and B OFF, HMI ✓

Qualified Beamline Staff return pressure to pretest values ✓

Aperture Low Press. A and B ON (**green**), HMI ✓

Test Result:	☑ Passed	☐ Failed

Tested by: [signature] Date: 1/30/18

Tested by: [signature] Date: 1/30/18

REV	DESCRIPTION	BY	DATE	CHK	APP
A	INITIAL RELEASE	JARZABKOWSKI	1/26/2018	JM	AS

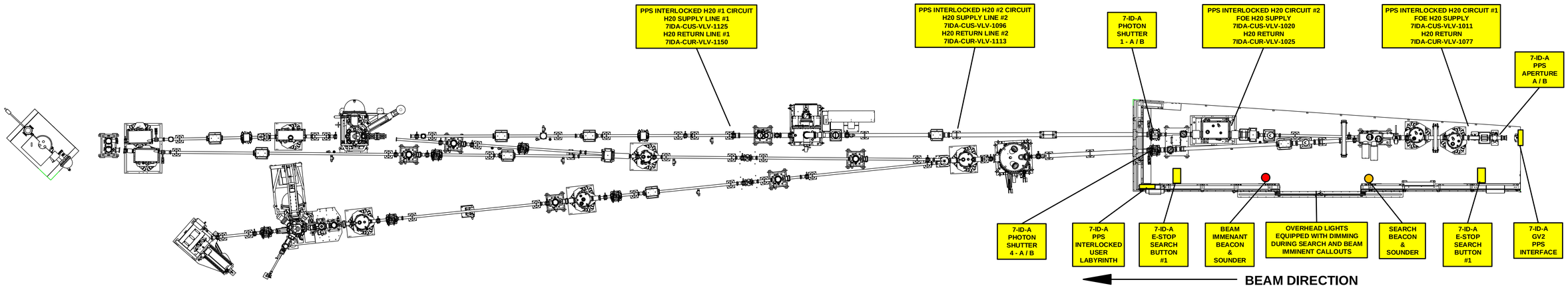

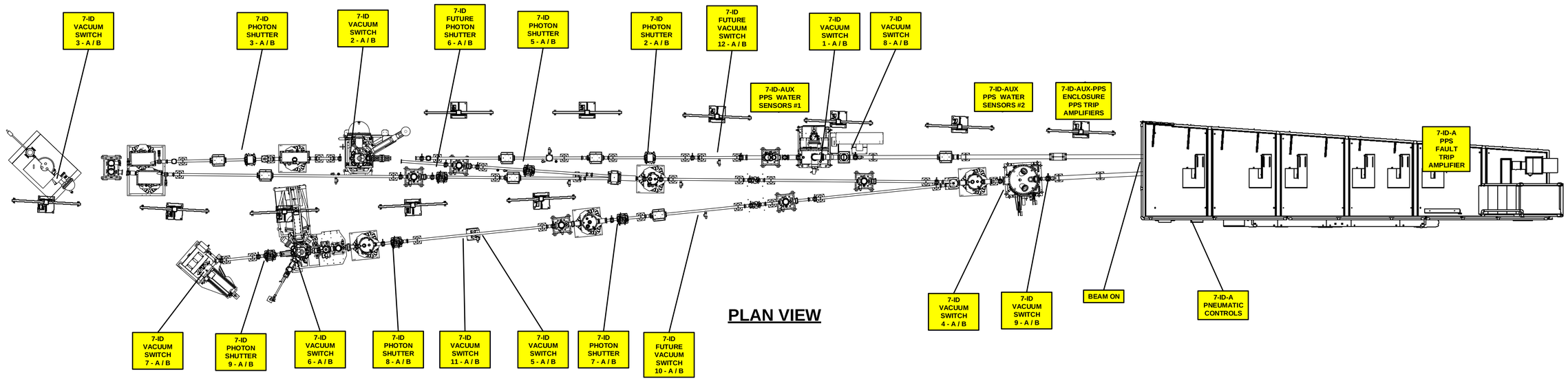

PLAN VIEW

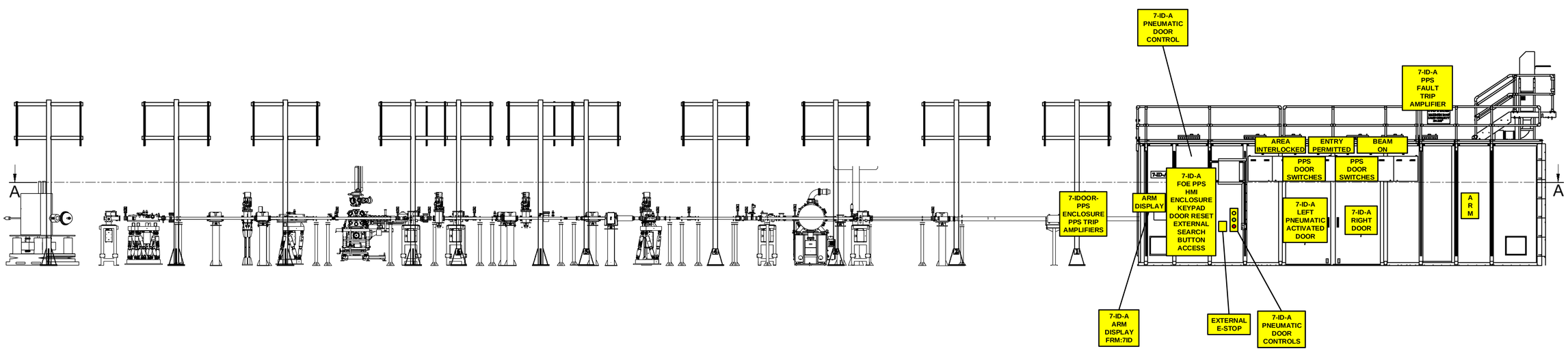

LT-EL-BL-EI-HCH-1070

BROOKHAVEN NATIONAL LABORATORY
Exploring Life's Mysteries... Protecting its Future

BROOKHAVEN NATIONAL LABORATORY
BROOKHAVEN SCIENCE ASSOCIATES
UPTON, NEW YORK 11973

NSLS II
NATIONAL SYNCHROTRON LIGHT SOURCE II

UNLESS OTHERWISE SPECIFIED
INTEGER TOLERANCES ± .06
DECIMAL TOLERANCES
X ± .030
.XX ± .015
.XXX ± .010
ANGULAR TOLERANCE ± 0.5°
UNSPECIFIED RADII .02 MAX
125 BREAK SHARP CORNERS AND EDGES
FINISH MAX .03 MIN .005

UNLESS OTHERWISE SPECIFIED
DIMENSIONS ARE IN INCHES
[ ] DENOTES ITEMS IN
MILLIMETERS EQUIV. FOR REF. ONLY

ESH&Q RISK LEVEL A-2

INTERPRET DRAWING AS PER ANSI Y14.5 OR Y32.2

		DATE
DRWN BY	S. JARZABKOWSKI	1/26/2018
CHK BY	J. MALLEY	1/26/2018
ENG APP	S. BUDA	1/26/2018
SUPV APP	G. GANETIS	1/26/2018
QA APP	E. CHESWICK	1/26/2018
ESH APP	R. LEE	1/26/2018

OUTSTANDING ECN'S

JOB NUMBER | USED ON DWG. NO.

PPS EQUIPMENT LAYOUT DRAWING, FOR 7-ID HUTCH (SST)

DRAWING DIRECTORY: LT-EL-BL-EI
DRAWING NUMBER: LT-EL-BL-EI-HCH-1070
REV: A

COMPUTER REPRODUCABLE | SCALE: N/A | SHEET 1 OF 1

FIRMWARE/SOFTWARE/PROGRAMMING LOGIC

DESCRIPTION:

PLC Program for Pentant 3 Front End PPS CPU A Chain

PROGRAM	**Siemens Step 7**	
VERSION	**V5.5 + SP4**	
DEVICE	**SIEMENS CPU 319-3 PN/DP**	
OPERATING SYSTEM	**WINDOWS**	
PROGRAMMING METHOD	**LADDER LOGIC**	
FILE	**Pentant_3_Front End _Rev G**	

REV	DESCRIPTION	BY	DATE	CHK	APP
A	INITIAL RELEASE	SB	10/23/14	MP	SB
B	REVISED PER ECN# 015-1013	SB	10/24/14	MP	SB
C	REVISED PER ECN# 015-1154	SB	04/24/15	MP	SB
D	REVISED PER ECN# 016-1451	SB	03/01/16	MP	SB
E	REVISED PER ECN# 016-1472	SB	06/03/16	MP	SB
F	REVISED PER ECN# 017-1711	SB	01/06/17	MP	SB
G	REVISED PER ECN# 017-1776	SB	01/06/17	MP	SB

LT-EL-BL-EI-PPS-0101-72

BROOKHAVEN NATIONAL LABORATORY

BROOKHAVEN NATIONAL LABORATORY
BROOKHAVEN SCIENCE ASSOCIATES
UPTON, NEW YORK 11973
Exploring Life's Mysteries, Protecting its Future

NSLS II
NATIONAL SYNCHROTRON LIGHT SOURCE II

UNLESS OTHERWISE SPECIFIED
INTEGER TOLERANCES
± .06
DECIMAL TOLERANCES
.X ± .030
.XX ± .015
.XXX ± .010
ANGULAR TOLERANCE ± 0.5°
UNSPECIFIED RADII .02 MAX
125 BREAK SHARP CORNERS AND EDGES
FINISH MAX .03 MIN .005

UNLESS OTHERWISE SPECIFIED DIMENSIONS ARE IN INCHES DIMENSIONS IN [*.**] ARE MILLIMETERS EQUIV. FOR REF. ONLY

ESH&Q RISK LEVEL A-1

INTERPRET DRAWING AS PER ANSI Y14.5 OR Y32.2

		DATE
DRWN BY	S.BUDA	10/23/14
CHK BY	M.PFEFFER	10/23/14
ENG APP	S.BUDA	10/23/14
SUPV APP	G.GANETIS	10/23/14
QA APP	E.CHESWICK	10/22/14
ESH APP	B.LEE	10/22/14

OUTSTANDING ECN'S

PROGRAMMABLE LOGIC
NSLS-II-PENTANT 3 FRONT END PPS CPU A CHAIN

LT-EL-BL-IN (DRAWING DIRECTORY) | LT-EL-BL-EI-PPS-0101-72 (DRAWING NUMBER) | G (REV)

COMPUTER REPRODUCIBLE | SCALE: N/A | SHEET 1 OF 1

JOB NUMBER | USED ON DWG. NO.

FIRMWARE/SOFTWARE/PROGRAMMING LOGIC

DESCRIPTION:

FRONT END PPS MAIN CPU PROGRAM PENTANT 3 B CHAIN

PROGRAM	**RSLOGIX 5000**	
VERSION	**20.03**	
DEVICE	**ALLEN BRADLEY 1768-L43S**	
OPERATING SYSTEM	**WINDOWS**	
PROGRAMMING METHOD	**ETHERNET**	
FILE	**LT_EL_BL_EI_PPS_0101_82_Rev_G.ACD**	

REV	DESCRIPTION	BY	DATE	CHK	APP
A	INITIAL RELEASE	SB	10/23/14	MP	SB
B	REVISED PER ECN -015-1198	SB	10/19/15	MP	SB
C	REVISED PER ECN -015-1343	SX	1/20/16	MP	SB
D	REVISED PER ECN -016-1468	SX	5/27/16	MP	SB
E	REVISED PER ECN -016-1517	SX	7/15/16	MP	SB
F	REVISED PER ECN -017-1703	SX	1/04/17	MP	SB
G	REVISED PER ECN -017-1759	SX	5/25/17	MP	SB

LT-EL-BL-EI-PPS-0101-82

BROOKHAVEN NATIONAL LABORATORY

BROOKHAVEN NATIONAL LABORATORY
BROOKHAVEN SCIENCE ASSOCIATES
UPTON, NEW YORK 11973
Exploring Life's Mysteries, Protecting its Future

NSLS II
NATIONAL SYNCHROTRON LIGHT SOURCE II

UNLESS OTHERWISE SPECIFIED
INTEGER TOLERANCES
± .06
DECIMAL TOLERANCES
.X ± .030
.XX ± .015
.XXX ± .010
ANGULAR TOLERANCE ± 0.5°
UNSPECIFIED RADII .02 MAX
125 BREAK SHARP CORNERS AND EDGES
FINISH MAX .03 MIN .005

UNLESS OTHERWISE SPECIFIED DIMENSIONS ARE IN INCHES DIMENSIONS IN [*.**] ARE MILLIMETERS EQUIV. FOR REF. ONLY

ESH&Q RISK LEVEL A-1

INTERPRET DRAWING AS PER ANSI Y14.5 OR Y32.2

OUTSTANDING ECN'S

		DATE
DRWN BY	S.BUDA	10/23/14
CHK BY	M.PFEFFER	11-17-14
ENG APP	S.BUDA	11-17-14
SUPV APP	G.GANETIS	11-17-14
QA APP	E.CHESWICK	12-01-14
ESH APP	B.LEE	11-19-14

PROGRAMMABLE LOGIC

NSLS-II-FRONT END PPS MAIN CPU PROGRAM PENTANT 3 B CHAIN

LT-EL-BL-IN — DRAWING DIRECTORY
LT-EL-BL-EI-PPS-0101-82 — DRAWING NUMBER
G — REV

COMPUTER REPRODUCIBLE | SCALE: N/A | SHEET 1 OF 1

JOB NUMBER | USED ON DWG. NO.

FIRMWARE/SOFTWARE/PROGRAMMING LOGIC

DESCRIPTION:

7-ID A CHAIN BEAMLINE PPS PLC PROGRAM

PROGRAM	**SIEMENS STEP 7**	
VERSION	**VERSION 5.5 + SP4**	
DEVICE	**SIEMENS CPU319F-3-PN/DP**	
OPERATING SYSTEM	**WINDOWS**	
PROGRAMMING LANGUAGE	**LADDER LOGIC**	
FILE	**NSLS II Beamline_ID7 REV A**	
SAFETY SIGNATURE	**774D4489**	

REV	DESCRIPTION	BY	DATE	CHK	APP
A	INITIAL RELEASE	EO	01/10/18	MP	SB

LT-EL-BL-EI-PPS-1070-70

BROOKHAVEN NATIONAL LABORATORY

BROOKHAVEN NATIONAL LABORATORY
BROOKHAVEN SCIENCE ASSOCIATES
UPTON, NEW YORK 11973
Exploring Life's Mysteries, Protecting its Future

NSLS II
NATIONAL SYNCHROTRON LIGHT SOURCE II

UNLESS OTHERWISE SPECIFIED
INTEGER TOLERANCES
± .06
DECIMAL TOLERANCES
.X ± .030
.XX ± .015
.XXX ± .010
ANGULAR TOLERANCE ± 0.5°
UNSPECIFIED RADII .02 MAX
125 BREAK SHARP CORNERS AND EDGES
FINISH MAX .03 MIN .005

UNLESS OTHERWISE SPECIFIED DIMENSIONS ARE IN INCHES DIMENSIONS IN [*.**] ARE MILLIMETERS EQUIV. FOR REF. ONLY

ESH&Q RISK LEVEL A-1

INTERPRET DRAWING AS PER ANSI Y14.5 OR Y32.2

		DATE	OUTSTANDING ECN'S
DRWN BY	S.BUDA	01/10/18	
CHK BY	M.PFEFFER	01/10/18	
ENG APP	S.BUDA	01/10/18	
SUPV APP	G.GANETIS	01/12/18	
QA APP	E.CHESWICK	01/11/18	
ESH APP	B.LEE	01/11/18	

PROGRAMMABLE LOGIC

ID7 A CHAIN BEAMLINE PPS PLC PROGRAM

LT-EL-BL-EI DRAWING DIRECTORY	LT-EL-BL-EI-PPS-1070-70 DRAWING NUMBER	A REV

COMPUTER REPRODUCIBLE | SCALE: N/A | SHEET 1 OF 1

JOB NUMBER	USED ON DWG. NO.

FIRMWARE/SOFTWARE/PROGRAMMING LOGIC

DESCRIPTION:

7-ID B CHAIN BEAMLINE PPS PLC PROGRAM

PROGRAM	**RS LOGIX 5000**	
VERSION	**20.03**	
DEVICE	**ALLEN BRADLEY 1768 L43S SAFETY PLC**	
OPERATING SYSTEM	**WINDOWS**	
PROGRAMMING METHOD	**LADDER**	
FILE	**ID7_B_PLC_20171228.ACD**	

REV	DESCRIPTION	BY	DATE	CHK	APP
A	INITIAL RELEASE	SX	01/10/18	MP	SB

LT-EL-BL-EI-PPS-1070-71

BROOKHAVEN NATIONAL LABORATORY

BROOKHAVEN NATIONAL LABORATORY
BROOKHAVEN SCIENCE ASSOCIATES
UPTON, NEW YORK 11973
Exploring Life's Mysteries, Protecting its Future

NSLS II
NATIONAL SYNCHROTRON LIGHT SOURCE II

UNLESS OTHERWISE SPECIFIED
INTEGER TOLERANCES ± .06
DECIMAL TOLERANCES
.X ± .030
.XX ± .015
.XXX ± .010
ANGULAR TOLERANCE ± 0.5°
UNSPECIFIED RADII .02 MAX
125 BREAK SHARP CORNERS AND EDGES
FINISH MAX .03 MIN .005

UNLESS OTHERWISE SPECIFIED DIMENSIONS ARE IN INCHES DIMENSIONS IN [*.**] ARE MILLIMETERS EQUIV. FOR REF. ONLY

ESH&Q RISK LEVEL A-1

INTERPRET DRAWING AS PER ANSI Y14.5 OR Y32.2

		DATE	OUTSTANDING ECN'S
DRWN BY	S.Xin	01/10/18	
CHK BY	M.PFEFFER	01/10/18	
ENG APP	S.BUDA	01/10/18	
SUPV APP	G.GANETIS	01/12/18	
QA APP	E.CHESWICK	01/11/18	
ESH APP	B.LEE	01/11/18	

PROGRAMMABLE LOGIC
NSLS II B CHAIN BEAMLINE PPS PLC PROGRAM (7-ID)

LT-EL-BL-IN (DRAWING DIRECTORY)	LT-EL-BL-EI-PPS-1070-71 (DRAWING NUMBER)	A (REV)

COMPUTER REPRODUCIBLE | SCALE: N/A | SHEET 1 OF 1

JOB NUMBER | USED ON DWG. NO.