REVISION HISTORY					
REV	DESCRIPTION	DATE	DESIGNER	CHECKED BY	ENGINEER
A	RELEASE PER ECO-005472	3/27/2018	J.FABIJANIC	R.G / M.L.	A.BROADBENT

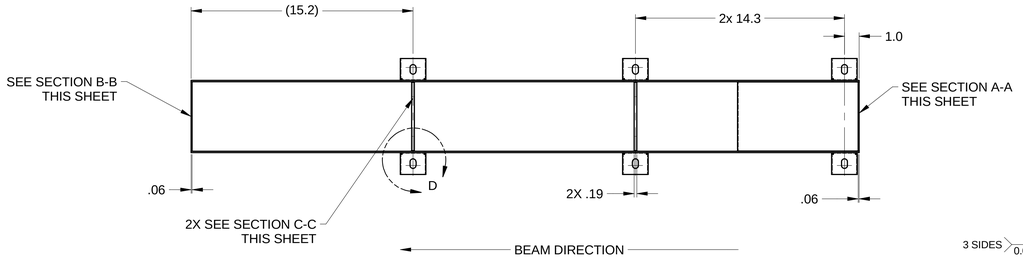

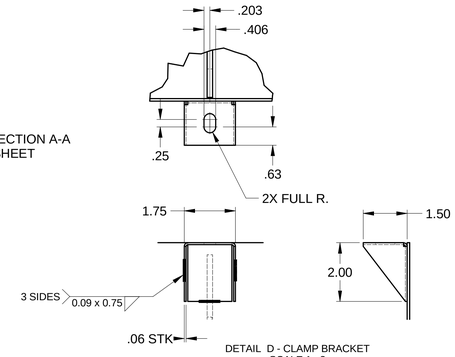

DETAIL D - CLAMP BRACKET
SCALE 1 : 2
QTY: 28
SHIELD -1 6X
SHIELD -2 8X
SHIELD -3 4X
SHIELD -4 10X

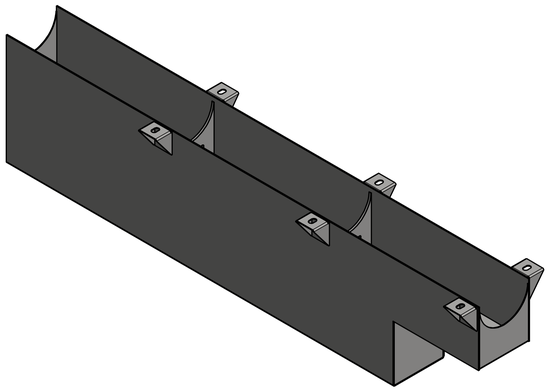

ISO VIEW (SHIELD -1)
SCALE 1 : 4

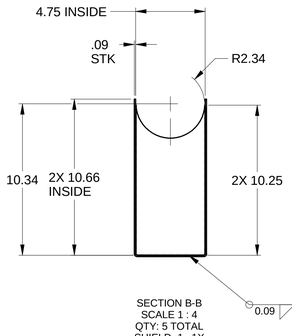

SECTION B-B
SCALE 1 : 4
QTY: 5 TOTAL
SHIELD -1 1X
SHIELD -2 2X
SHIELD -3 0X
SHIELD -4 2X

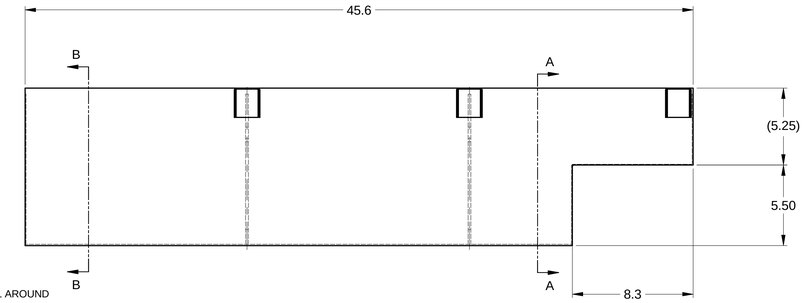

BEAM PIPE SHIELD -1
SCALE 1 : 4
QTY: 1

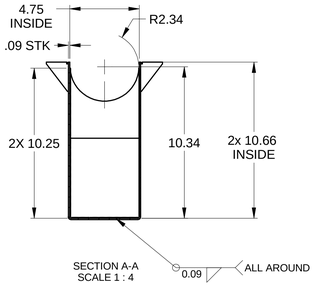

SECTION A-A
SCALE 1 : 4

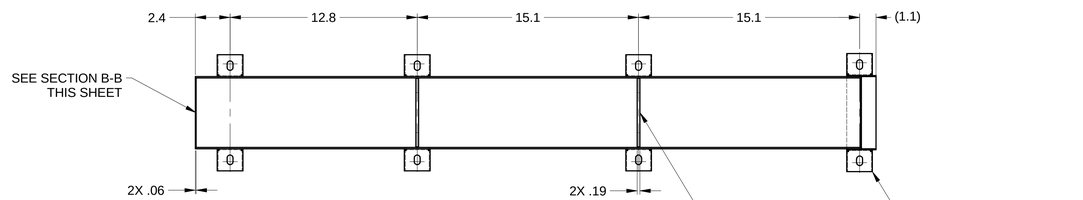

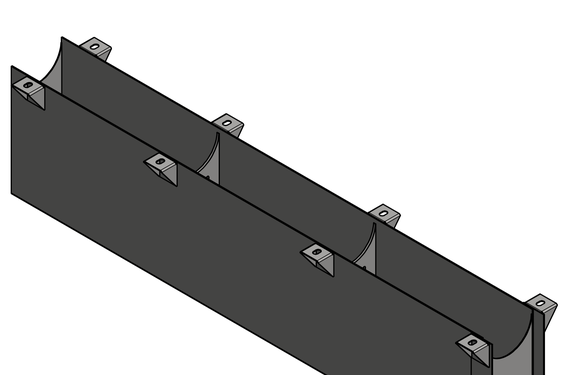

ISO VIEW (SHIELD -2)
SCALE 1 : 4

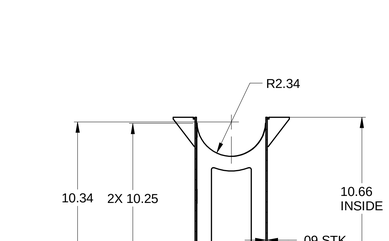

SECTION C-C
SCALE 1 : 4
QTY: 7 TOTAL
SHIELD -1 2X
SHIELD -2 2X
SHIELD -3 0X
SHIELD -4 3X

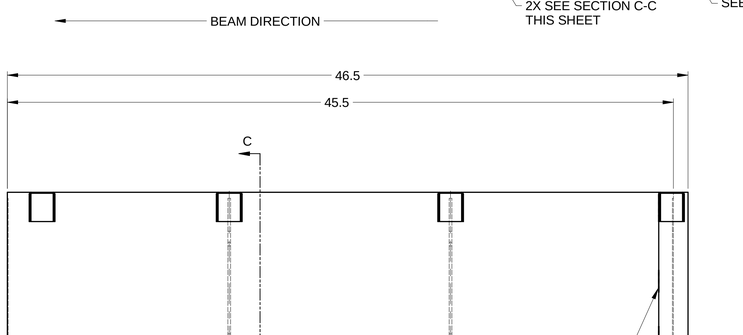

BEAM PIPE SHIELD -2
SCALE 1 : 4
QTY: 1

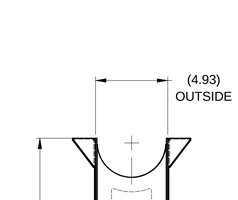

NOTES:

1. ITEM IDENTIFICATION: TAG WITH SHIELD NUMBER AND APPLICABLE REVISION LETTER.
2. SEE SST RAY TRACE DRAWING PD-SST-RAYT-0001 FOR (B25) SHIELD LOCATION.
3. A QUANTITY OF (4) SHIELDS -1 TO -4 ARE TO BE PRODUCED FOR THIS INSTALLATION LOCATION SEE SHEET 3.
4. SHIELD TO BE CLAMPED ONTO O.D. OF BEAM PIPE. SEE SHEET 3 FOR TYPICAL INSTALLATION.
5. WELD IN ACCORDANCE WITH AWS D1.6/D1.6M (STRUCTURAL WELDING CODE - STAINLESS STEEL).
6. ALL BENDS TO HAVE MINIMUM BEND RADIUS.

MATERIAL: SST SHEET TYPE 304 PER ASTM A240 — MASS: N/A

UNLESS OTHERWISE SPECIFIED
ALL DIMENSIONS ARE IN INCHES
DIMENSIONS IN BRACKETS [xx.xx] (WHERE PRESENT) ARE MILLIMETERS AND ARE FOR REFERENCE ONLY
INTERPRET DRAWING AS PER ASME Y14.5-1994 OR Y32.2-1975

DIMENSIONAL TOLERANCES: X. ± 0.060, .X ± 0.030, .XX ± 0.015, .XXX ± 0.005
ANGULAR TOLERANCE: ± .5°
FINISH: 125
BREAK EDGES & SHARP CORNERS 0.005 MIN. TO 0.030 MAX

BROOKHAVEN NATIONAL LABORATORY — Exploring Life's Mysteries, Protecting its Future
BROOKHAVEN NATIONAL LABORATORY, BROOKHAVEN SCIENCE ASSOCIATES, UPTON, NEW YORK 11973
NSLS II NATIONAL SYNCHROTRON LIGHT SOURCE II

DRAWN BY	J.FABIJANIC	3/27/2018
CHECKED BY	R.G. / M.L.	3/2018
VACUUM APPROVAL	N/A	N/A
ENGINEER APPROVAL	A.BROADBENT	03/2018
SUPERVISOR APPROVAL	D.FISCHER	3/2018
ESH&H APPROVAL	L.STIEGLER	3/2018
Q.A. APPROVAL	J.ZIPPER	3/2018

PHOTON DIVISION
SST BEAMLINE, SHIELDING
ASSY, SHIELDING, BEAM PIPE

NEXT ASSY: PD-SST-RAYT-0001
PROJECT: PARTNER
THIRD ANGLE PROJECTION
SCALE: SEE DWG VIEW
WBS# 7.02.03
SHEET SIZE: E — DRAWING/PART NUMBER: PD-SST-BL-SHLD-0600 — REVISION: A
ESH&Q RISK LEVEL: A1
SHEET 1 OF 3

C:\Mech-Eng\LTYPOS\STBLSHLD\PD-SST-BL-SHLD-0600.dwg

RELEASED + EFFECTIVE

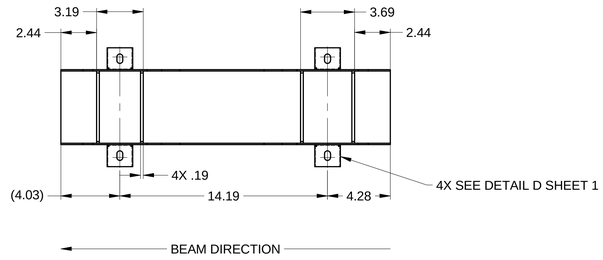

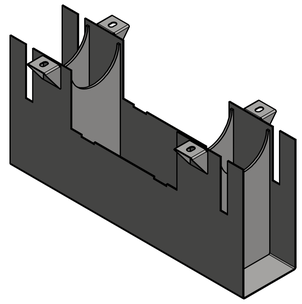

ISO VIEW (SHIELD -3)
SCALE 1 : 4

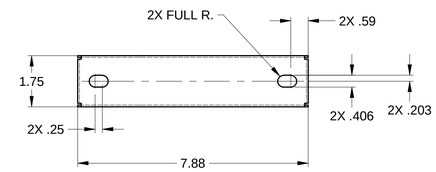

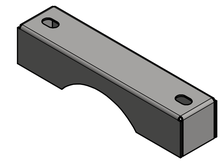

ISO VIEW
SCALE 1 : 2

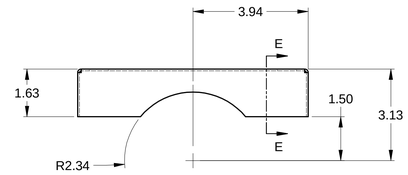

ITEM -8 SHIELD CLAMP
SCALE 1 : 2
QTY: 14

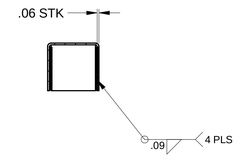

SECTION E-E
SCALE 1 : 2

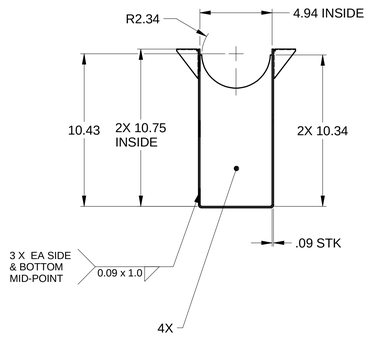

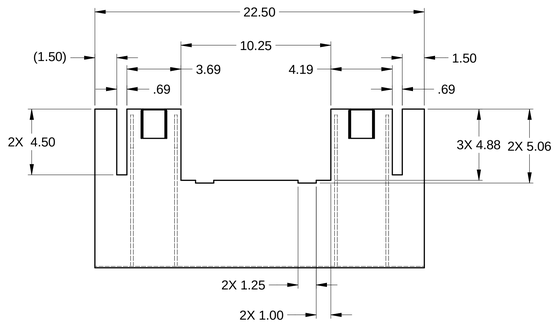

BEAM PIPE SHIELD -3
SCALE 1 : 4
QTY: 1

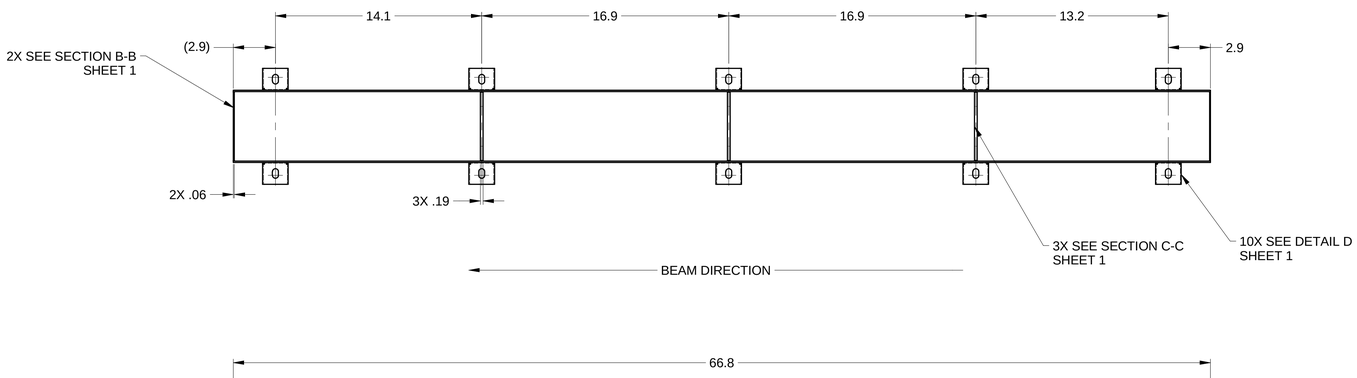

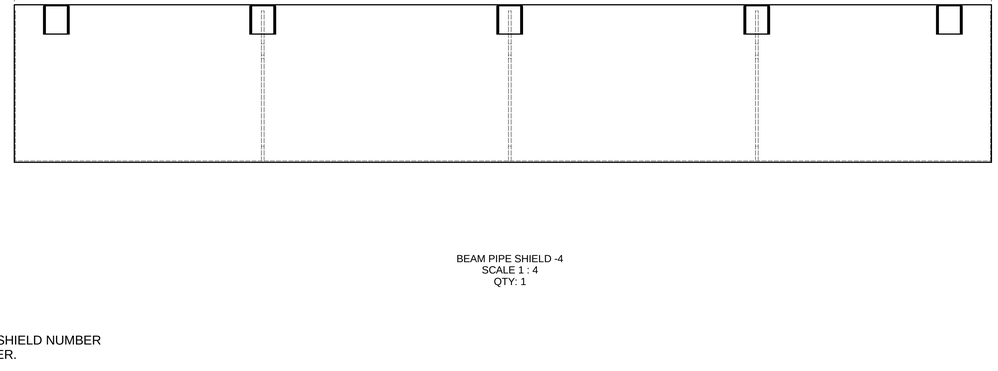

BEAM PIPE SHIELD -4
SCALE 1 : 4
QTY: 1

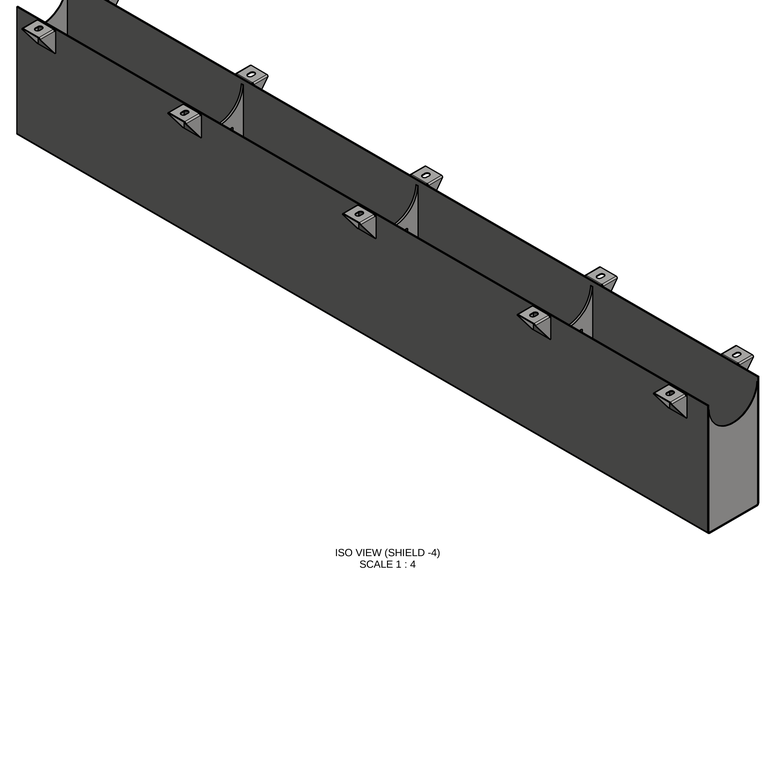

ISO VIEW (SHIELD -4)
SCALE 1 : 4

NOTES:

1. ITEM IDENTIFICATION: TAG WITH SHIELD NUMBER AND APPLICABLE REVISION LETTER.
2. SEE SST RAY TRACE DRAWING PD-SST-RAYT-0001 FOR (B25) SHIELD LOCATION.
3. A QUANTITY OF (4) SHIELDS -1 TO -4 ARE TO BE PRODUCED FOR THIS INSTALLATION LOCATION SEE SHEET 3.
4. SHIELD TO BE CLAMPED ONTO O.D. OF BEAM PIPE. SEE SHEET 3 FOR TYPICAL INSTALLATION.
5. WELD IN ACCORDANCE WITH AWS D1.6/D1.6M (STRUCTURAL WELDING CODE - STAINLESS STEEL).
6. ALL BENDS TO HAVE MINIMUM BEND RADIUS.

E (SHEET SIZE)	PD-SST-BL-SHLD-0600 (DRAWING/PART NUMBER)	A (REVISION)
ESH&Q RISK LEVEL A1	SHEET 2 OF 3	

C:\Mech-Engr_T\PROJ\SST\BL\SHLD\PD-SST-BL-SHLD-0600.dw

RELEASED + EFFECTIVE

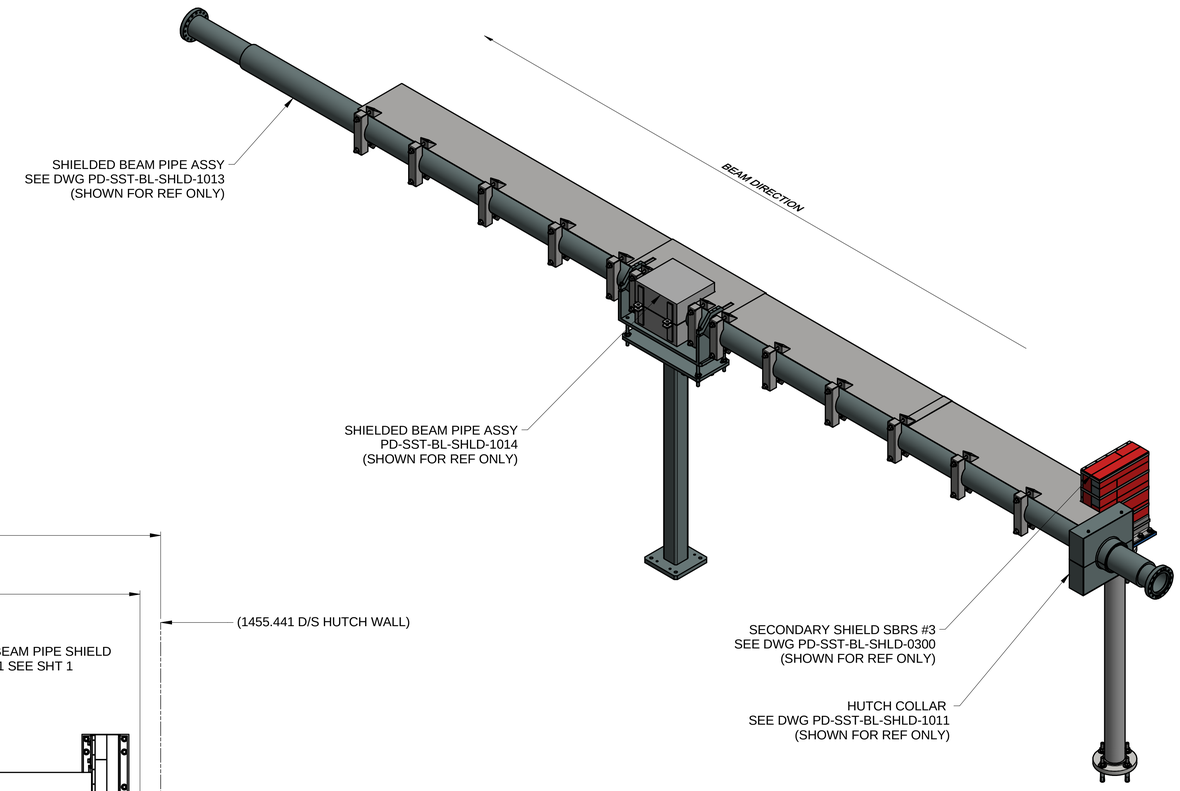

ISO VIEW
SCALE 1 : 10

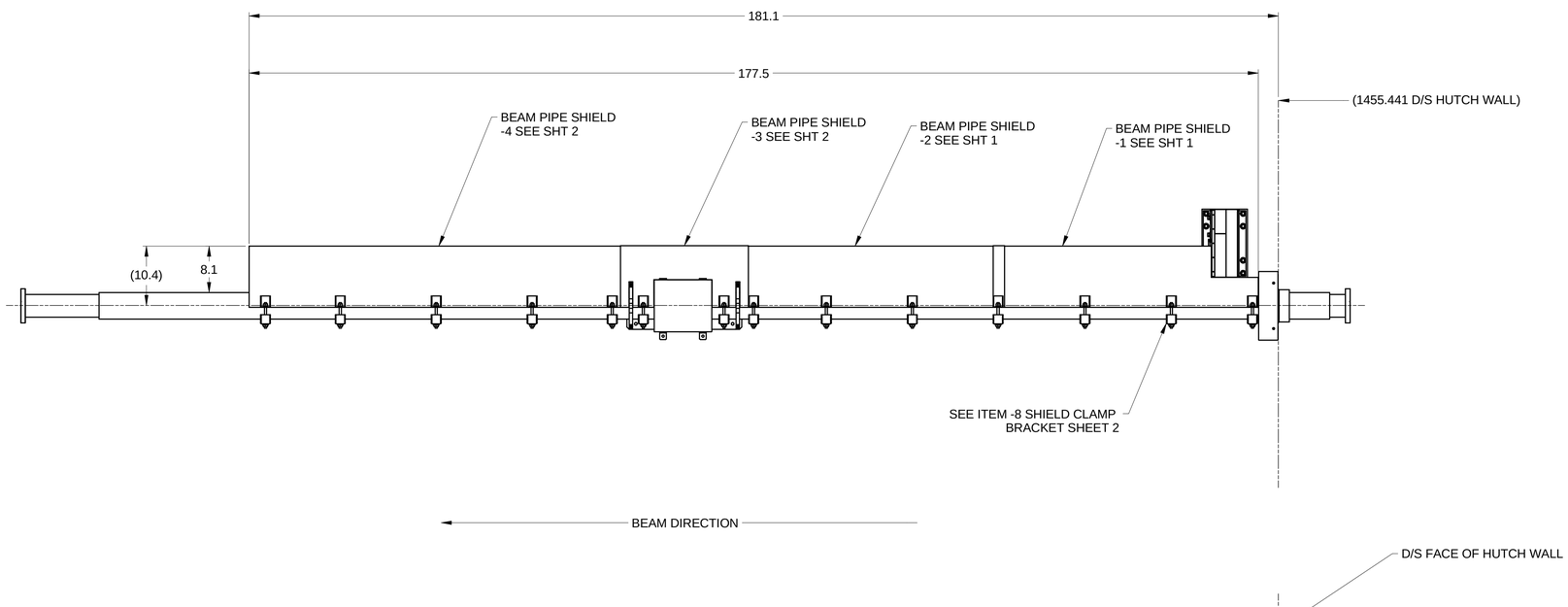

"L" BRANCH SHIELDED BEAM PIPE
SCALE 1 : 10

BEAM PIPE SHIELD CONFIGURATION (L BRANCH)

E (SHEET SIZE)	PD-SST-BL-SHLD-0600 (DRAWING/PART NUMBER)	A (REVISION)
ESH&Q RISK LEVEL A1	SHEET 3 OF 3	

C:\Mech Eng\LTPD\SST\BL\SHLD\PD-SST-BL-SHLD-0600.dwg

RELEASED + EFFECTIVE