NSLS II ID-28 PDF Beam Line Personal Protection System Certification Validation Check List
G. Ganetis 3/4/2018

Beam Line __28-ID PDF_____

The following check list represents the documents and tasks that summarize the review the evaluator has done for a NSLS II Beam Line Personal Protection System:

Document or Task	**Documents Reviewed**	**Checked**	**Comments**
Beam Line Logic Diagram	LT-EL-BL-EI-PPS-1280-96_REV-Dpdf		
Front End Logic Diagram	LT-EL-BL-EI-PPS-0101-92_REV-G.pdf		
Beam Line Logic Diagram reviewed by PS Radiation Safety Committee (Sub Committee)	logic_7id_28id_2018_final.pdf		
Electrical Schematics First Optical Enclosure Hutch B Hutch C Hutch D Water Flow Trip Amp Front End –Network/ System Front End-SR 28 I/O Box	 LT-EL-BL-EI-PPS-1280-91 _REV-E.pdf LT-EL-BL-EI-PPS-1280-95_REV-A.pdf LT-EL-BL-EI-PPS-1280-93_REV-D.pdf LT-EL-BL-EI-PPS-1280-94_REV-C.pdf LT-EL-BL-EI-PPS-1280-92_REV-C.pdf LT-EL-BL-EI-PPS-0101-90 _REV-B.pdf LT-EL-BL-EI-PPS-0101-91_REV-B.pdf LT-EL-SR-EI-PPS-0228-90_REV-K.pdf		 - - - - - (A Chain) (B Chain) -
Certification Test Procedure - ID 28 PPS Rad Interlock Cert Check List	Beamline Radiological Interlock Test NSLSII-NSLSII-ESH-PRC-001.pdf NSLS-II Beamline 28-ID Radiological Interlock Test 1.06.2018.pdf		
Mechanical Inspection reports for Beam line Hutch Doors.	28-ID Hutch B Door Inspections 2_12_18.pdf		
Beam Line Tour & Secure Demonstration			
Design Description for Beam Lines and Front End PPS	PS-C-XFD-SPC-PPS-001		(Copies available upon request)
Maintenance Procedures	PS-C-XFD-PRC-023		(Copies available upon request)
Network Isolation Test Procedure	PS-C-XFD-PRC-022		(Copies available upon request)
PPS Equipment Layout Drawing	LT-EL-BL-EI-HCH-1280_REV-C.pdf		

NSLS II ID-28 PDF Beam Line Personal Protection System Certification Validation Check List
G. Ganetis 3/4/2018

ECNs required after Certification using Small Change Procedure	LT-ECN-018-1915.pdf		Need small change to chain A PLC for beamline EPS interface. Beamline EPS was not operational at time of PPS certification.
Deviation Reports on Installed system			
Configuration Control 28-ID Chain A PPS Front End P5 Program Stored 28-ID Chain B PPS Front End P5 Program Stored 28-ID Chain A PPS Beamline Program Stored 28-ID Chain B PPS Beamline Program Stored	 LT-EL-BL-EI-PPS-0101-70_REV-D.pdf LT-EL-BL-EI-PPS-0101-80_REV-E.pdf LT-EL-BL-EI-PPS-1280-70_REV-K.pdf LT-EL-BL-EI-PPS-1280-71_REV-F.pdf		

Evaluator _____ _____ Date _____
Print Name Signature

By Signing this check list the Evaluator (To the best of his ability) has confirmed that the documentation and Inspected Beam Line PPS is ready for operations.

REV	DESCRIPTION	DATE	BY	CHECKED	APP
A	INITIAL RELEASE	09/05/2014	CV	JM	SB
B	REVISED PER ECN LT-ECN-015-1130	02/21/2015	CG	JM	SB
C	REVISED PER ECN LT-ECN-015-1260	02/13/2016	SEJ	JM	SB
D	REVISED PER ECN LT-ECN-018-1914	02/12/2018	SEJ	JM	SB

28-ID FOE SEARCH LOGIC

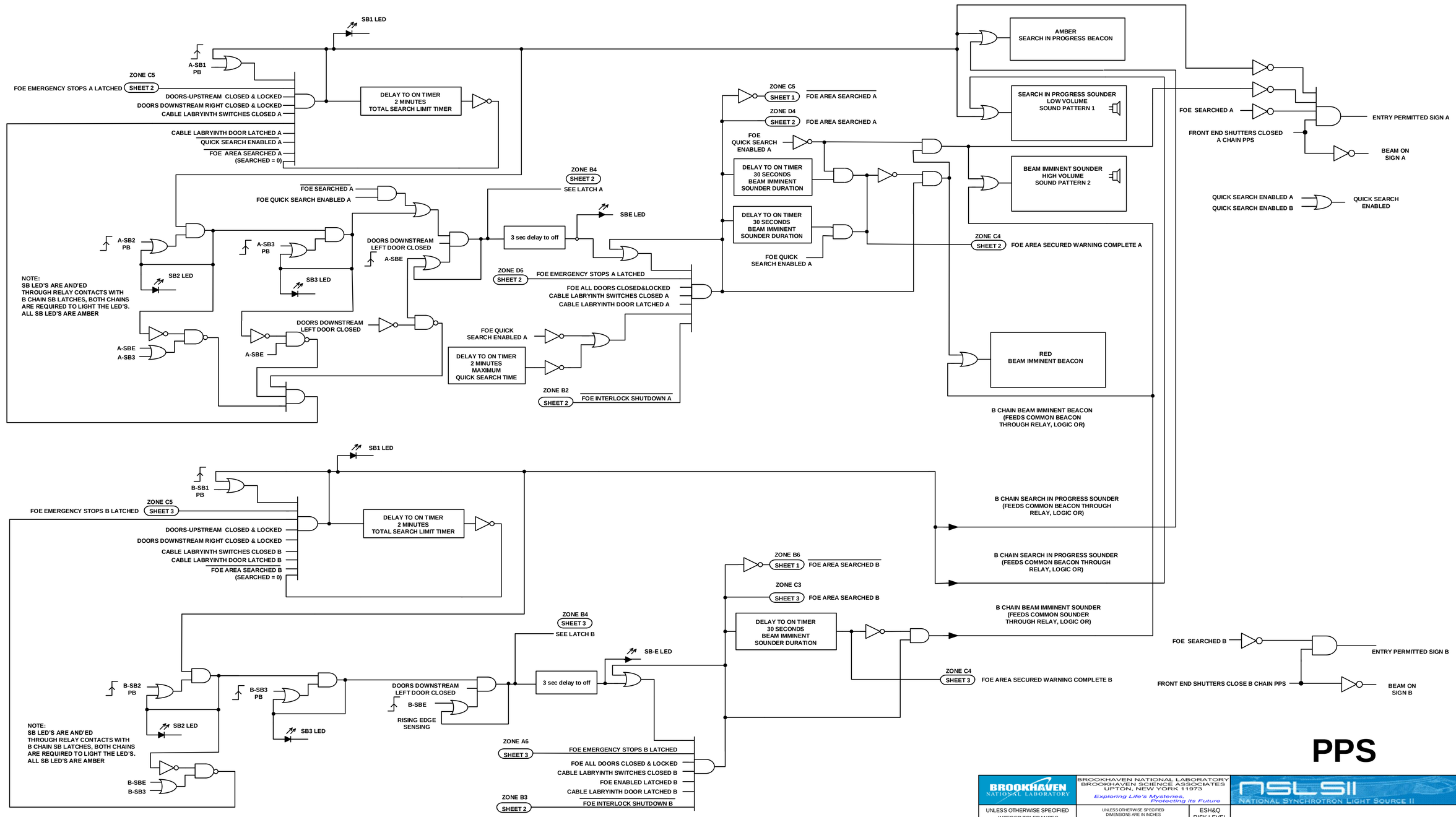

PPS

JOB NUMBER	USED ON DWG. NO.

BROOKHAVEN NATIONAL LABORATORY

BROOKHAVEN NATIONAL LABORATORY
BROOKHAVEN SCIENCE ASSOCIATES
UPTON, NEW YORK 11973
Exploring Life's Mysteries, Protecting its Future

NSLS II NATIONAL SYNCHROTRON LIGHT SOURCE II

UNLESS OTHERWISE SPECIFIED
INTEGER TOLERANCES ± .06
DECIMAL TOLERANCES
.X ± .030
.XX ± .015
.XXX ± .010
ANGULAR TOLERANCE ± 0.5°
UNSPECIFIED RADII .02 MAX
125 BREAK SHARP CORNERS AND EDGES
FINISH MAX .03 MIN .005

UNLESS OTHERWISE SPECIFIED DIMENSIONS ARE IN INCHES
DIMENSIONS IN [*.**] ARE MILLIMETERS EQUIV. FOR REF. ONLY

ESH&Q RISK LEVEL A-1

INTERPRET DRAWING AS PER ANSI Y14.5 OR Y32.2

		DATE
DRWN BY	S. JARZABKOWSKI	9/05/2014
CHK BY	J.MALLEY	9/05/2014
ENG APP	S. BUDA	9/08/2014
SUPV APP	G. GANETIS	9/10/2014
QA APP	E.CHESWICK	9/08/2014
ESH APP	R. LEE	9/10/2014

OUTSTANDING ECN'S

WIRING DIAGRAM,
28-ID FOE PPS SEARCH LOGIC

LT-EL-BL-EI (DRAWING DIRECTORY) | LT-EL-BL-EI-PPS-1280-95 (DRAWING NUMBER) | D (REV)

COMPUTER REPRODUCABLE | SCALE: N/A | SHEET 1 OF 20

LT-EL-BL-EI-PPS-1280-95

REV	DESCRIPTION	DATE	BY	CHECKED	APP
	SEE SHEET 1				

28-ID FOE SEARCH LOGIC A CHAIN

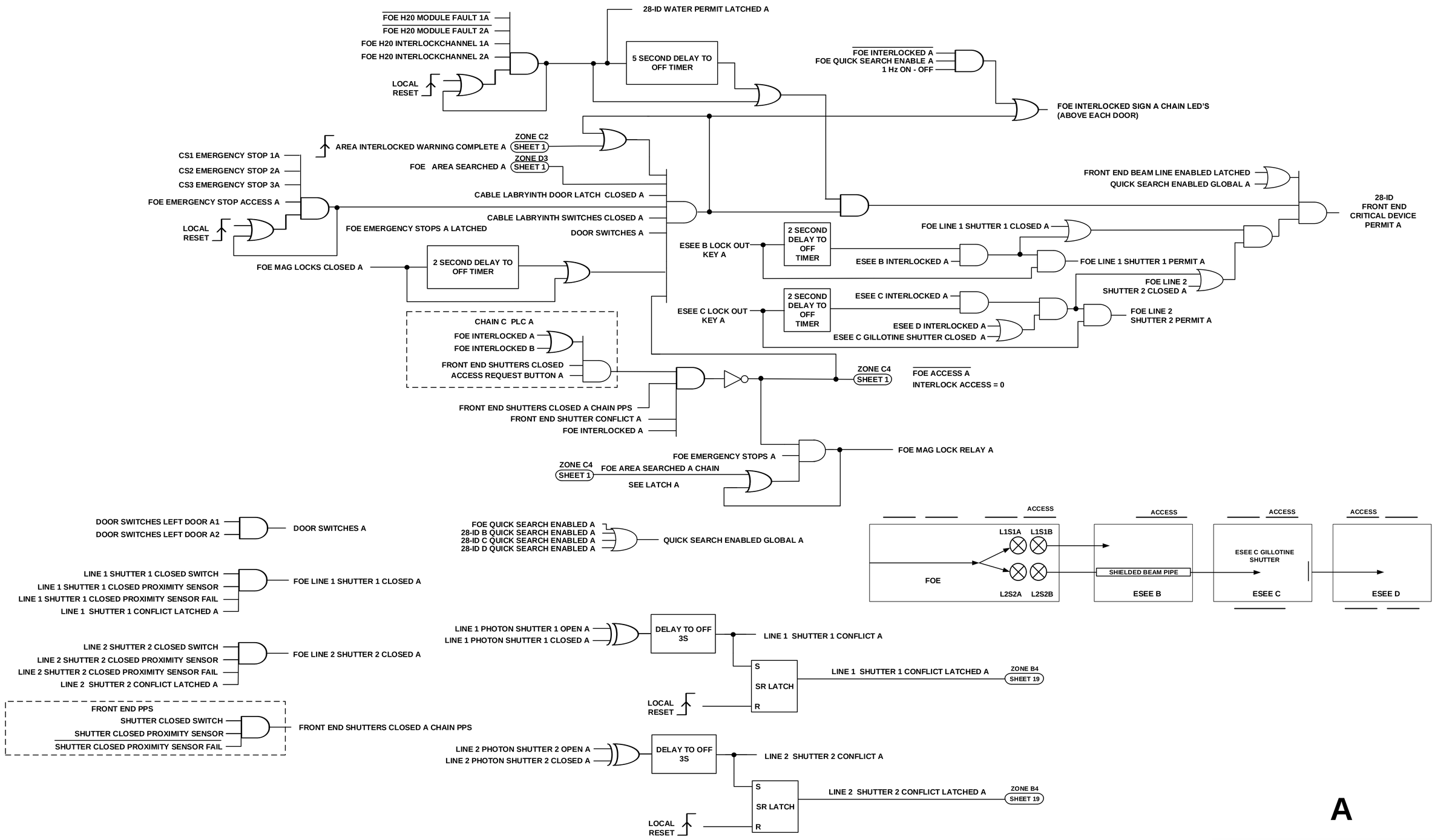

A

LT-EL-BL-EI DRAWING DIRECTORY	LT-EL-BL-EI-PPS-1280-96 DRAWING NUMBER	D REV
COMPUTER REPRODUCABLE	SCALE: N/A	SHEET 2 OF 20

LT-EL-BL-EI-PPS-1280-96

REV	DESCRIPTION	DATE	BY	CHECKED	APP
	SEE SHEET 1				

28-ID FOE SEARCH LOGIC B CHAIN

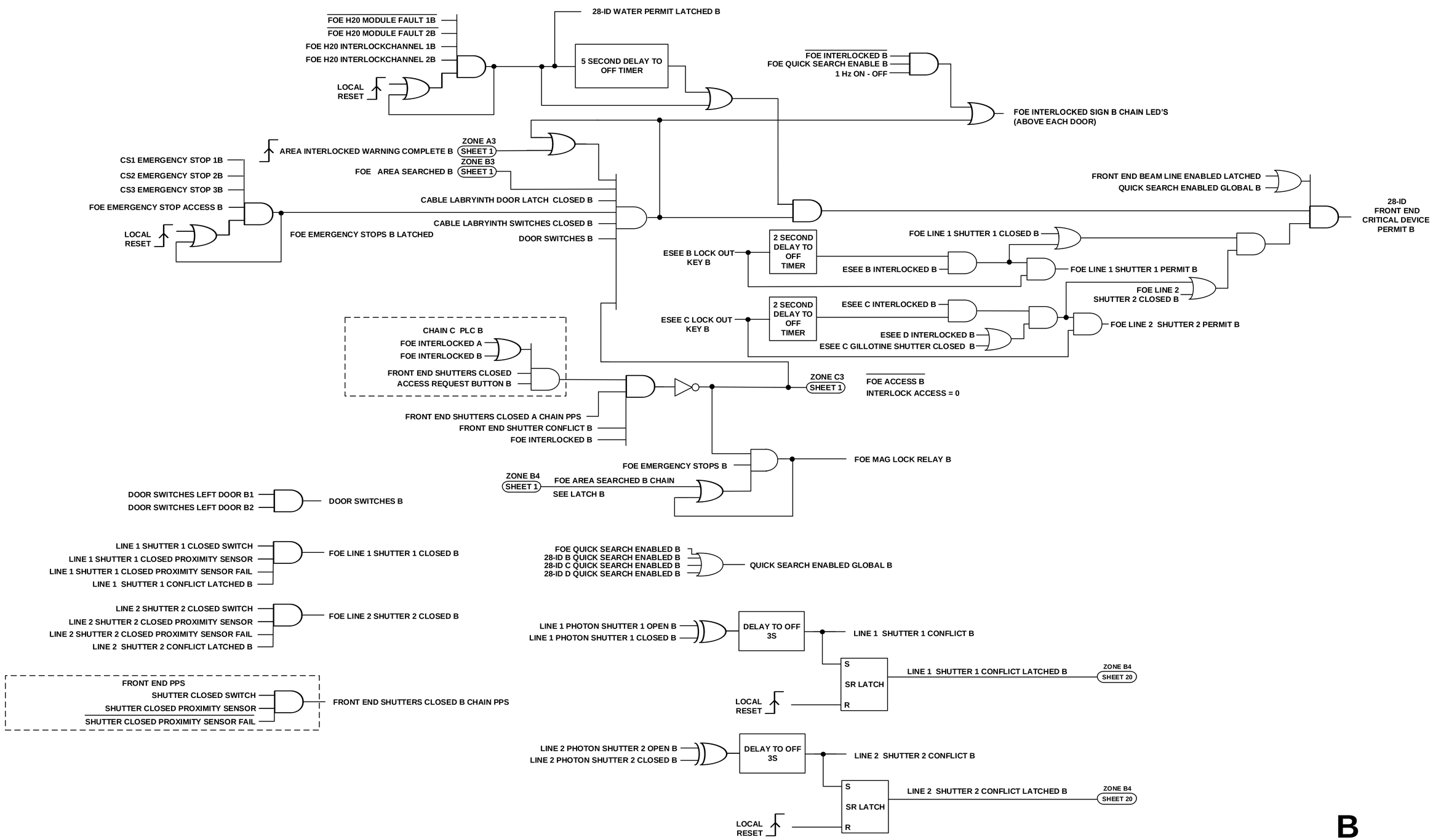

B

LT-EL-BL-EI (DRAWING DIRECTORY)	LT-EL-BL-EI-PPS-1280-96 (DRAWING NUMBER)	D (REV)
COMPUTER REPRODUCABLE	SCALE: N/A	SHEET 3 OF 20

LT-EL-BL-EI-PPS-1280-96

REV	DESCRIPTION	DATE	BY	CHECKED	APP
	SEE SHEET 1				

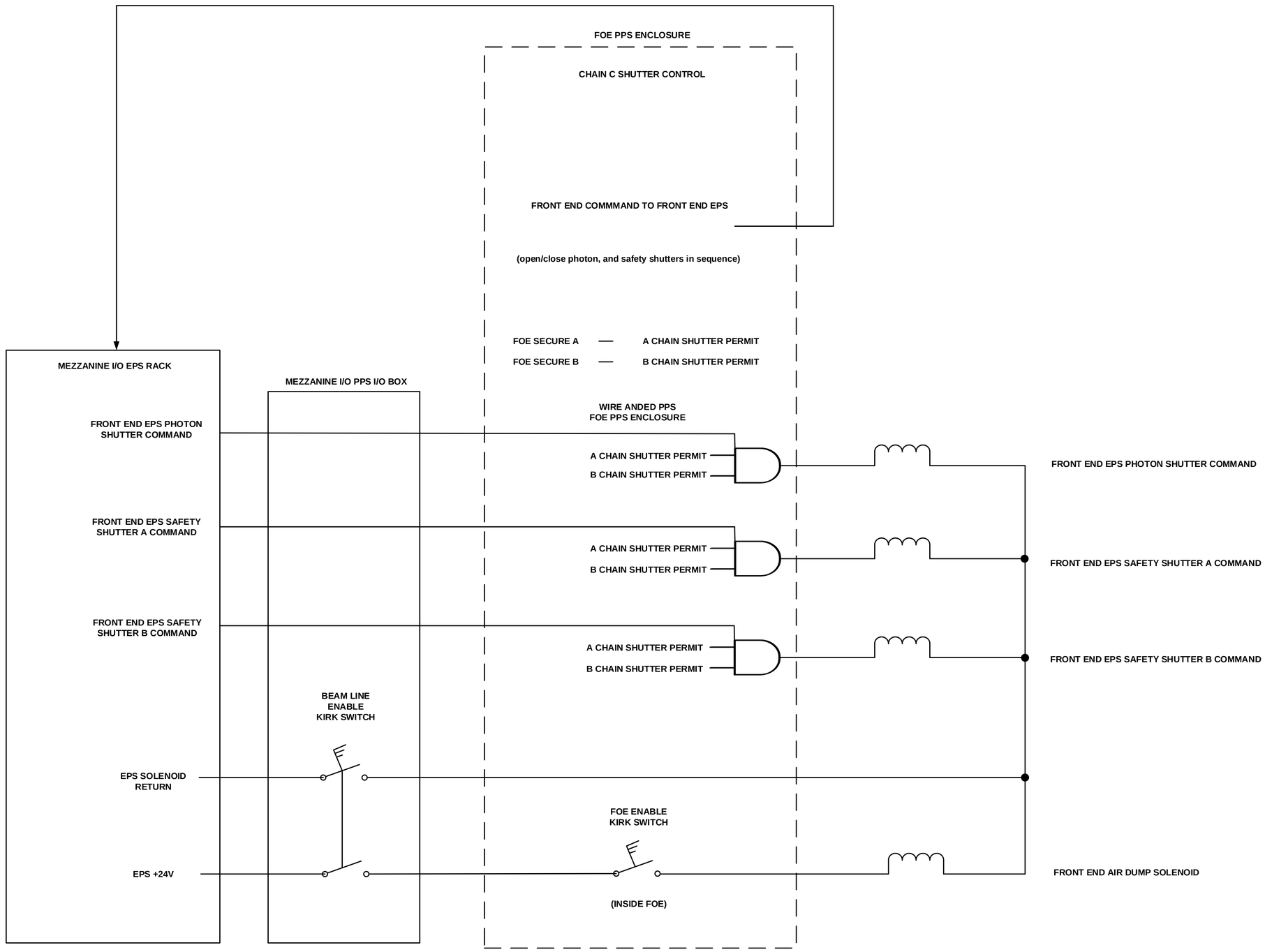

LT-EL-BL-EI DRAWING DIRECTORY	LT-EL-BL-EI-PPS-1280-96 DRAWING NUMBER	D REV
COMPUTER REPRODUCABLE	SCALE: N/A	SHEET 4 OF 20

LT-EL-BL-EI-PPS-1280-96

REV	DESCRIPTION	DATE	BY	CHECKED	APP
	SEE SHEET 1				

28-ID ESEE B SEARCH LOGIC

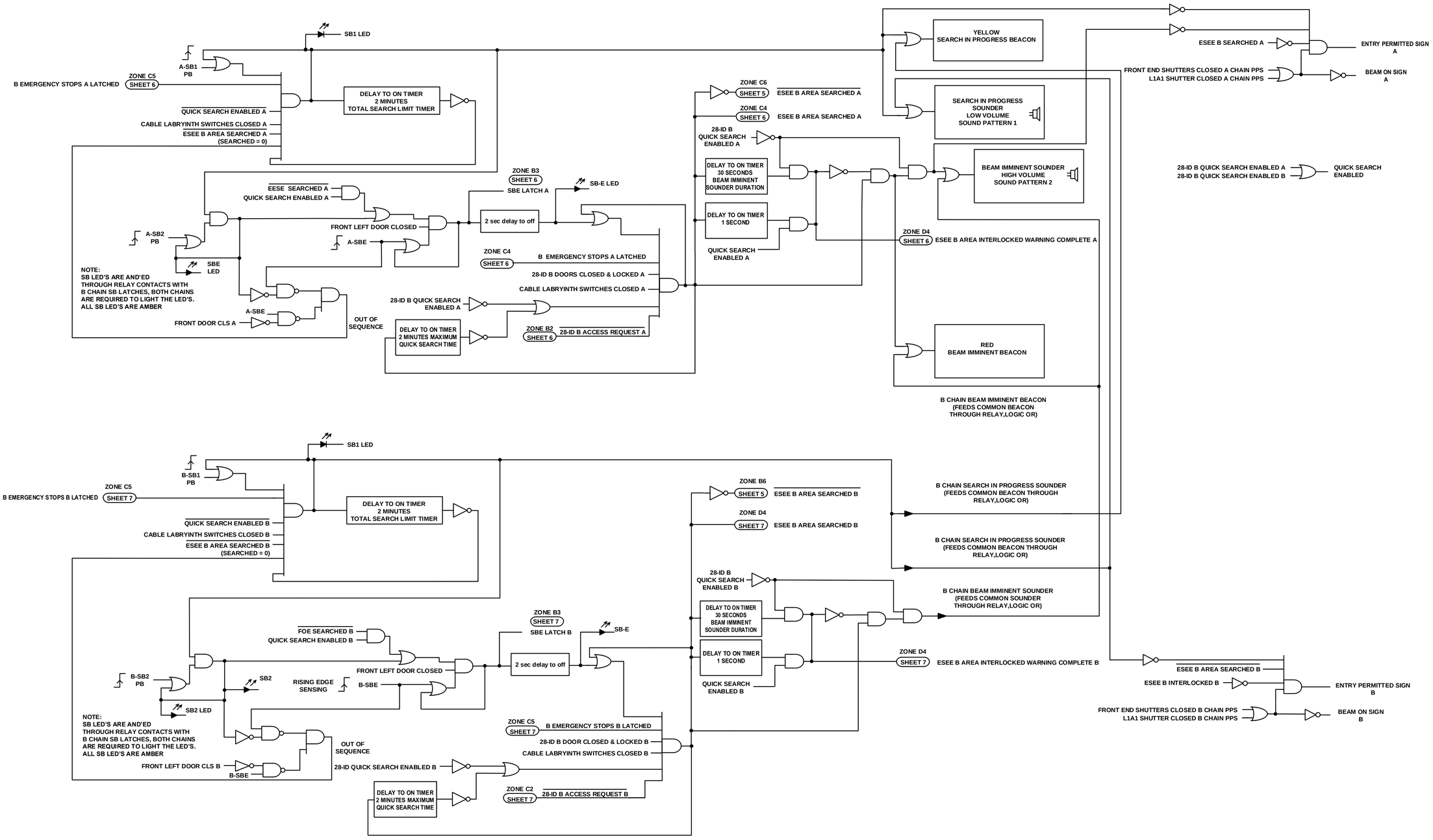

PPS

LT-EL-BL-EI (DRAWING DIRECTORY)	LT-EL-BL-EI-PPS-1280-96 (DRAWING NUMBER)	D (REV)
COMPUTER REPRODUCABLE	SCALE: N/A	SHEET 5 OF 20

LT-EL-BL-EI-PPS-1280-96

REV	DESCRIPTION	DATE	BY	CHECKED	APP
	SEE SHEET 1				

28-ID ESEE B SEARCH LOGIC A CHAIN

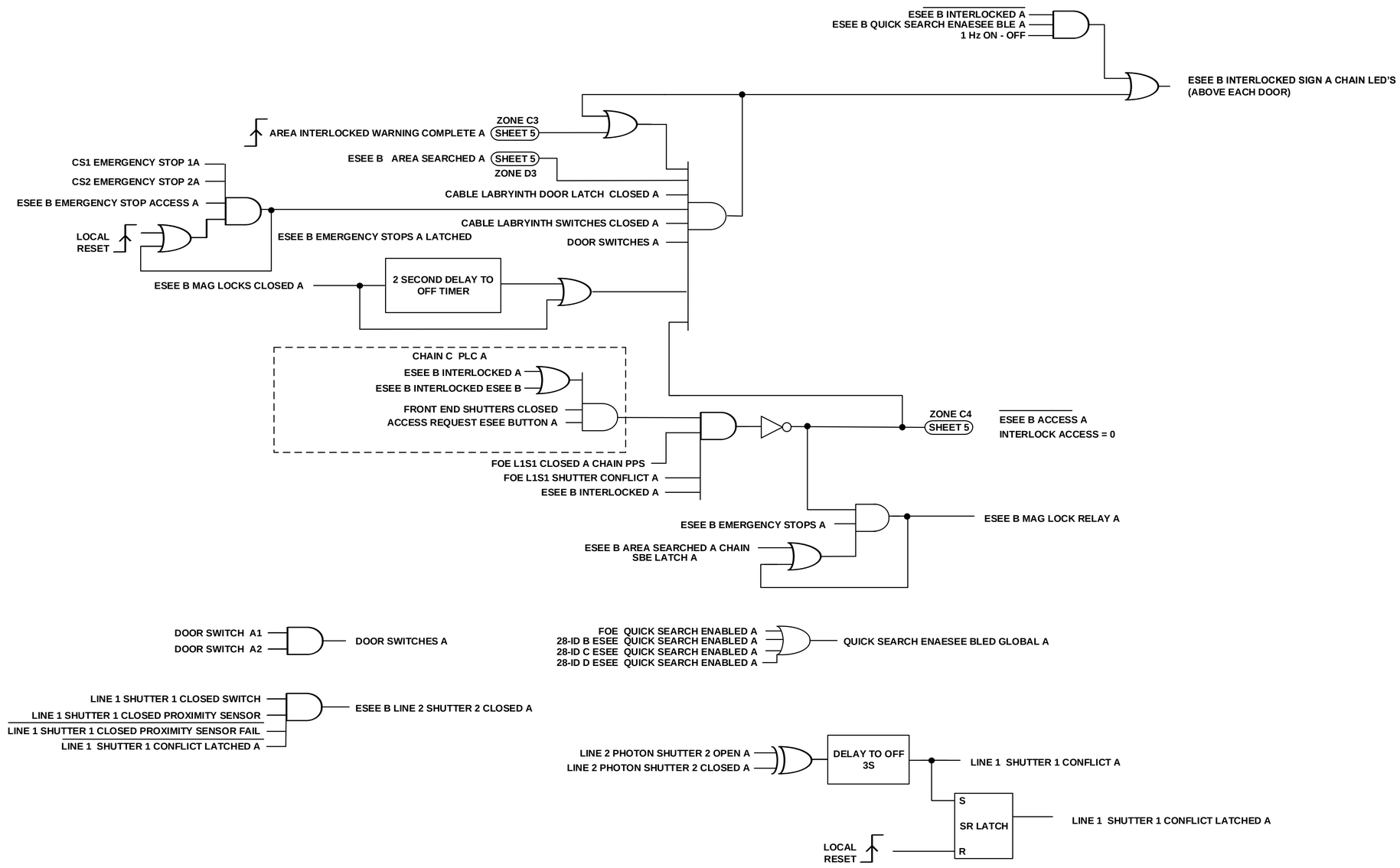

ESEE A

LT-EL-BL-EI (DRAWING DIRECTORY)	LT-EL-BL-EI-PPS-1280-96 (DRAWING NUMBER)	D (REV)
COMPUTER REPRODUCABLE	SCALE: N/A	SHEET 6 OF 20

LT-EL-BL-EI-PPS-1280-96

REV	DESCRIPTION	DATE	BY	CHECKED	APP
	SEE SHEET 1				

28-ID ESEE B SEARCH LOGIC B CHAIN

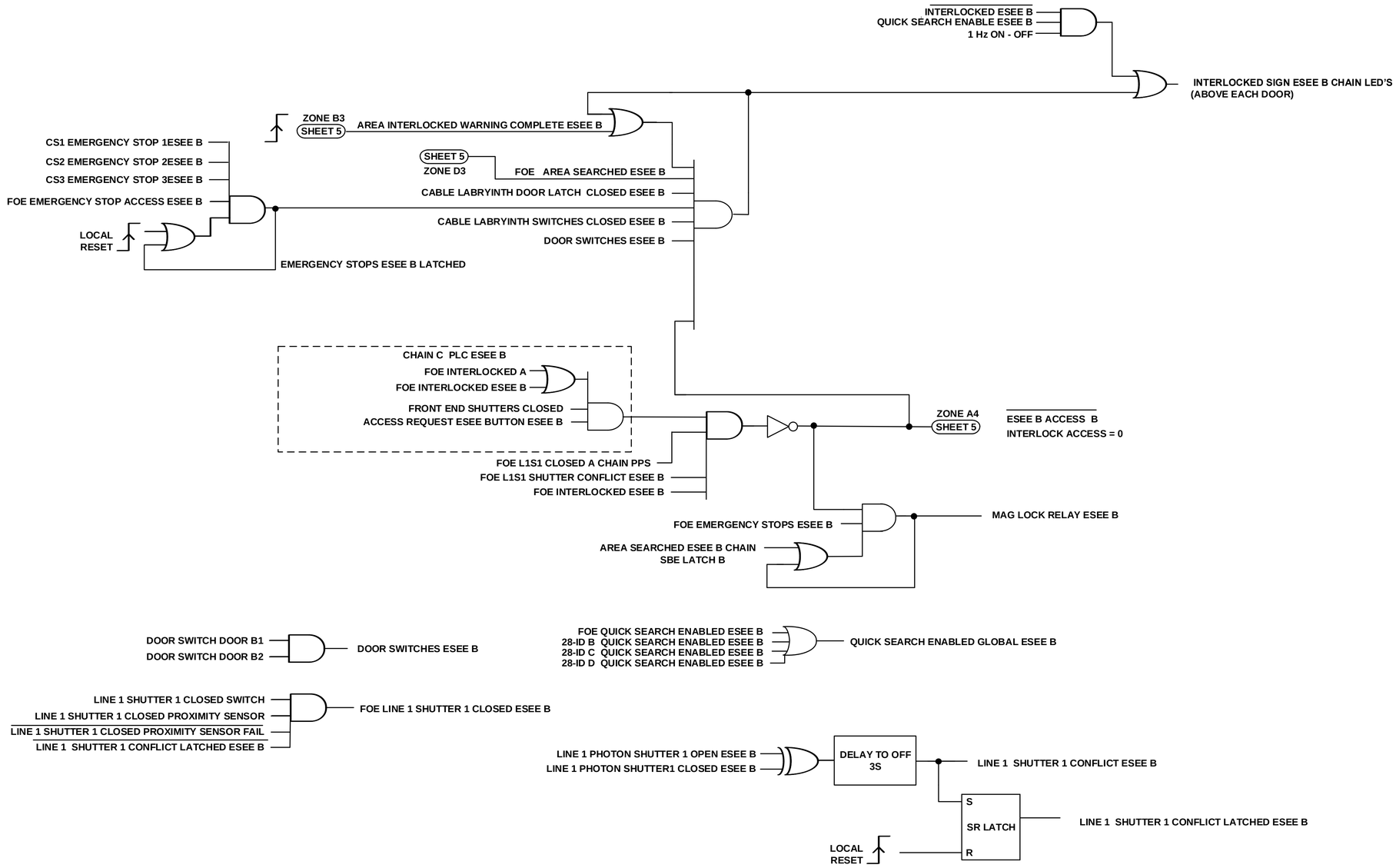

ESEE B

LT-EL-BL-EI (DRAWING DIRECTORY)	LT-EL-BL-EI-PPS-1280-96 (DRAWING NUMBER)	D (REV)
COMPUTER REPRODUCABLE	SCALE: N/A	SHEET 7 OF 20

LT-EL-BL-EI-PPS-1280-96

REV	DESCRIPTION	DATE	BY	CHECKED	APP
	SEE SHEET 1				

28-ID ESEE C SEARCH LOGIC

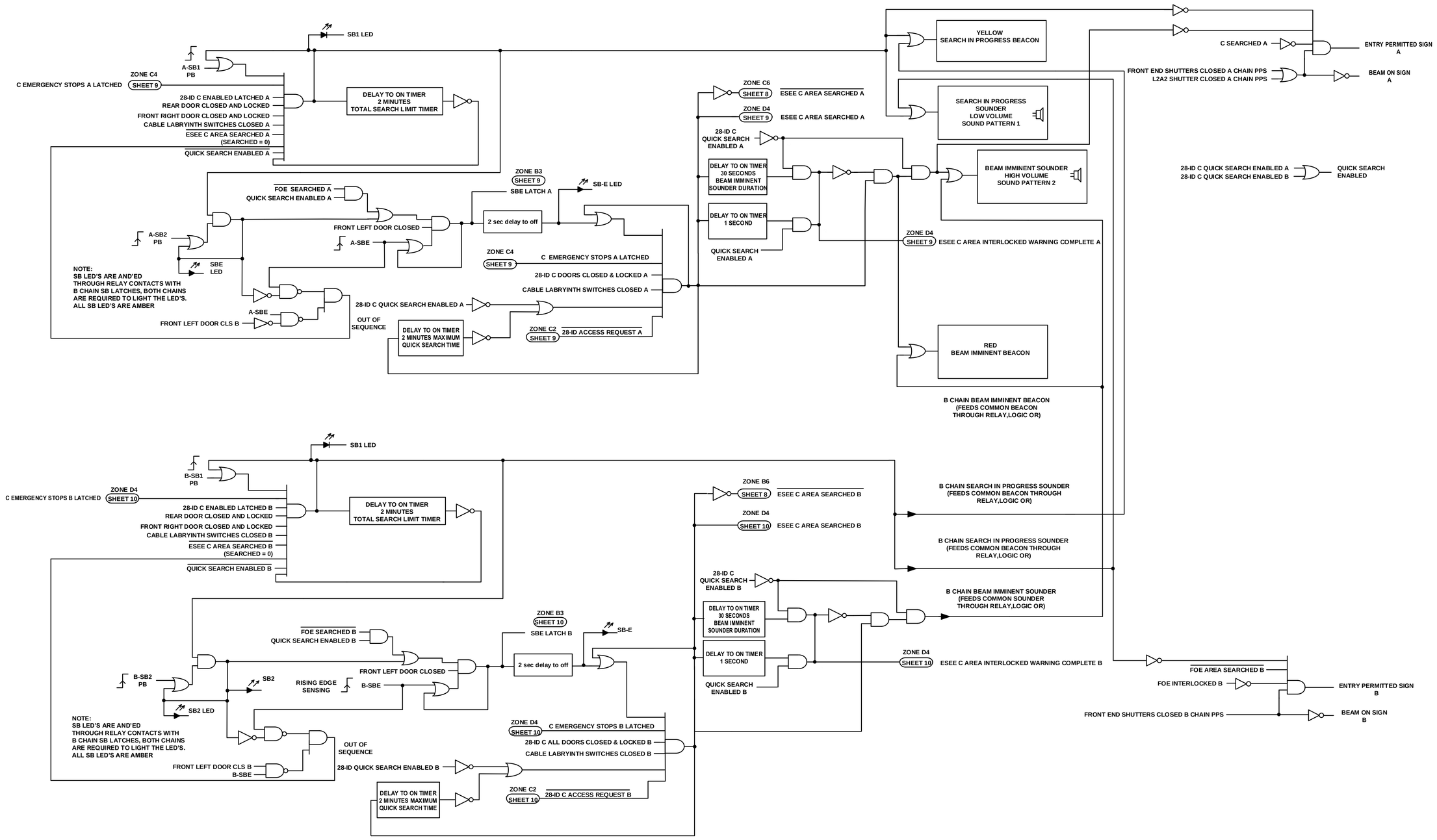

PPS

LT-EL-BL-EI	LT-EL-BL-EI-PPS-1280-96	D
DRAWING DIRECTORY	DRAWING NUMBER	REV

COMPUTER REPRODUCABLE | SCALE: N/A | SHEET 8 OF 20

LT-EL-BL-EI-PPS-1280-96

REV	DESCRIPTION	DATE	BY	CHECKED	APP
	SEE SHEET 1				

28-ID ESEE C SEARCH LOGIC A CHAIN

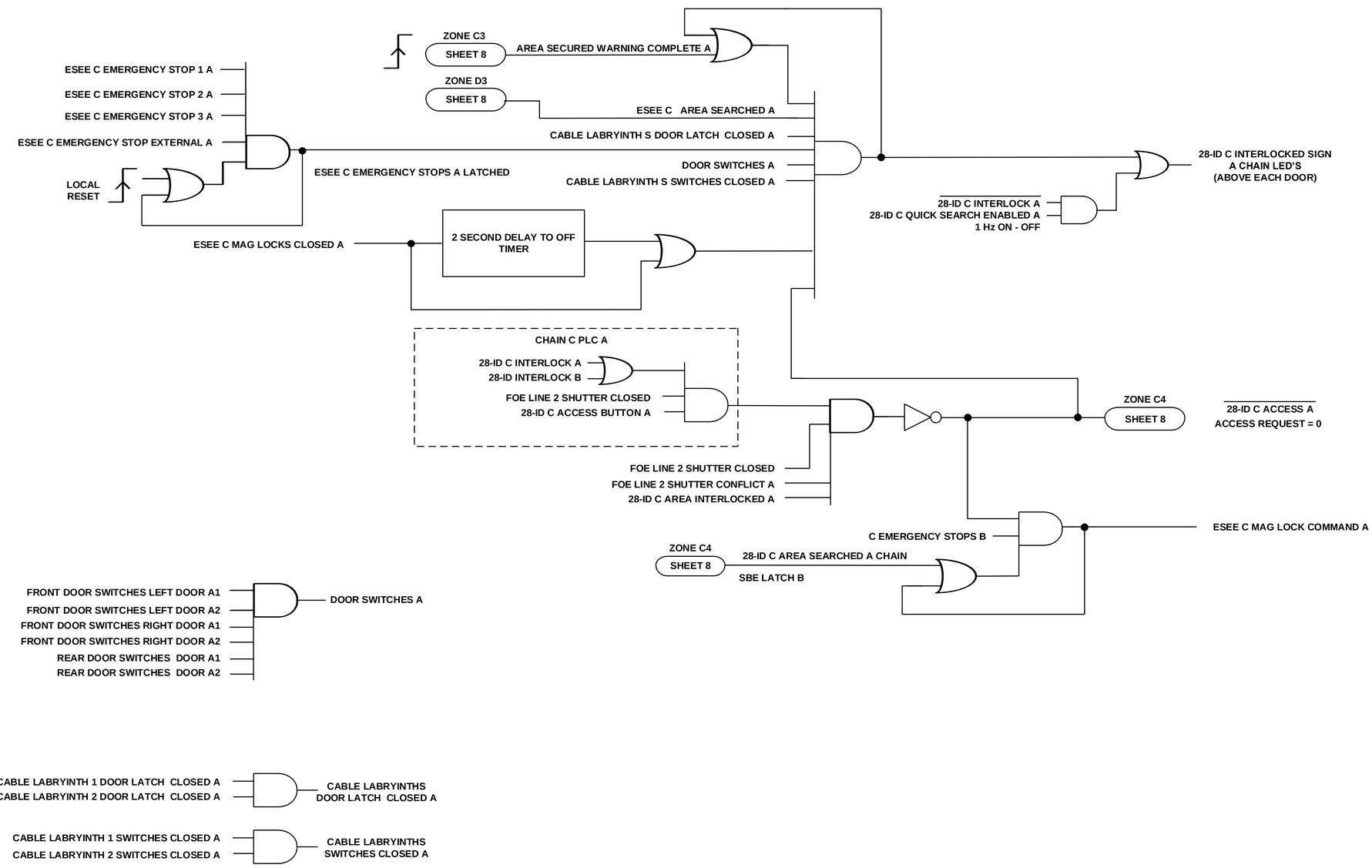

A

LT-EL-BL-EI (DRAWING DIRECTORY)	LT-EL-BL-EI-PPS-1280-96 (DRAWING NUMBER)	D (REV)
COMPUTER REPRODUCABLE	SCALE: N/A	SHEET 9 OF 20

LT-EL-BL-EI-PPS-1280-96

REV	DESCRIPTION	DATE	BY	CHECKED	APP
	SEE SHEET 1				

28-ID ESEE C SEARCH LOGIC B CHAIN

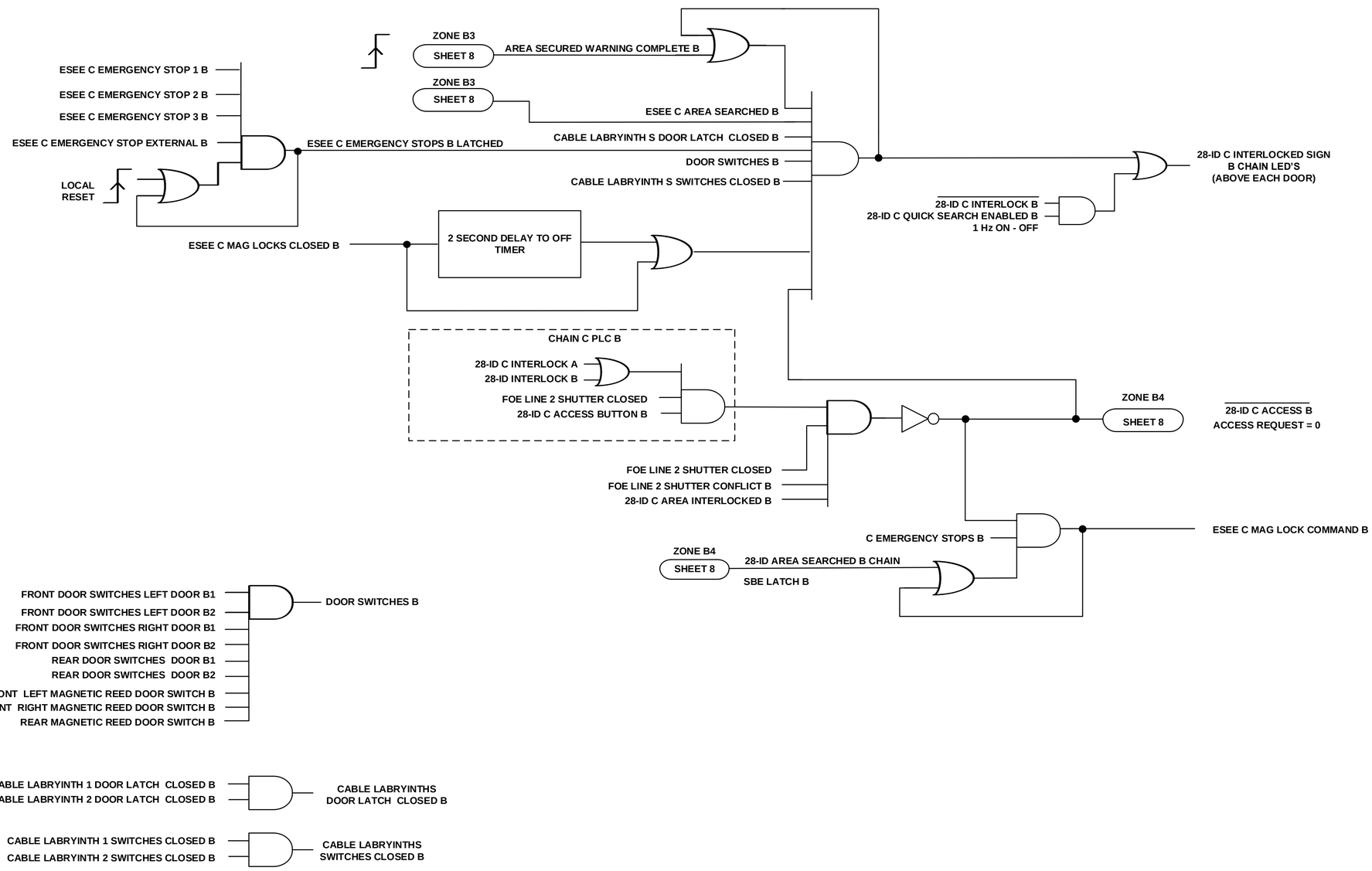

B

LT-EL-BL-EI (DRAWING DIRECTORY)	LT-EL-BL-EI-PPS-1280-96 (DRAWING NUMBER)	D (REV)
COMPUTER REPRODUCABLE	SCALE: N/A	SHEET 10 OF 20

LT-EL-BL-EI-PPS-1280-96

REV	DESCRIPTION	DATE	BY	CHECKED	APP
	SEE SHEET 1				

28-ID ESEE D SEARCH LOGIC

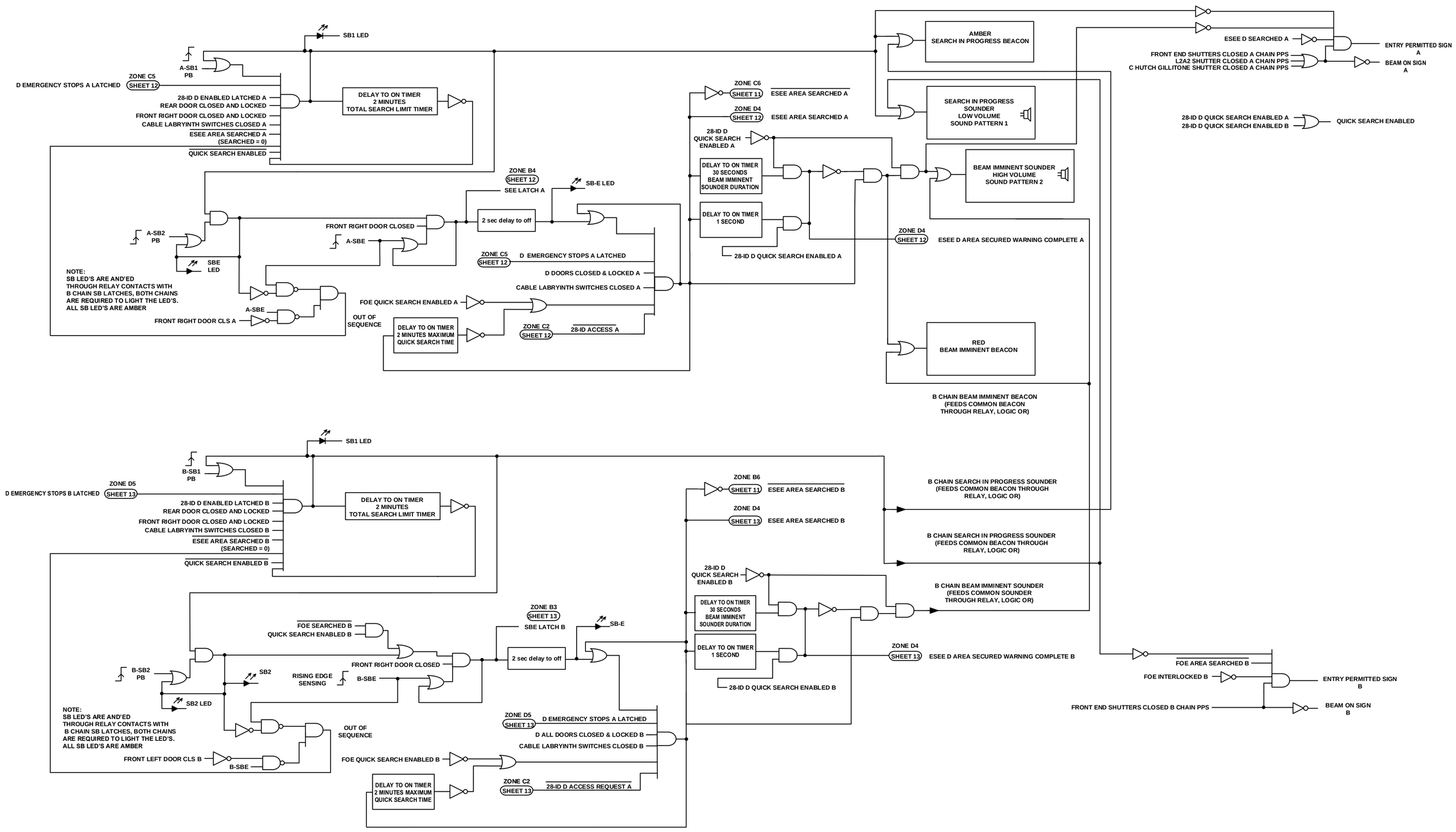

PPS

LT-EL-BL-EI (DRAWING DIRECTORY)	LT-EL-BL-EI-PPS-1280-96 (DRAWING NUMBER)	D (REV)
COMPUTER REPRODUCABLE	SCALE: N/A	SHEET 11 OF 20

LT-EL-BL-EI-PPS-1280-96

REV	DESCRIPTION	DATE	BY	CHECKED	APP
	SEE SHEET 1				

28-ID ESEE D SEARCH LOGIC A CHAIN

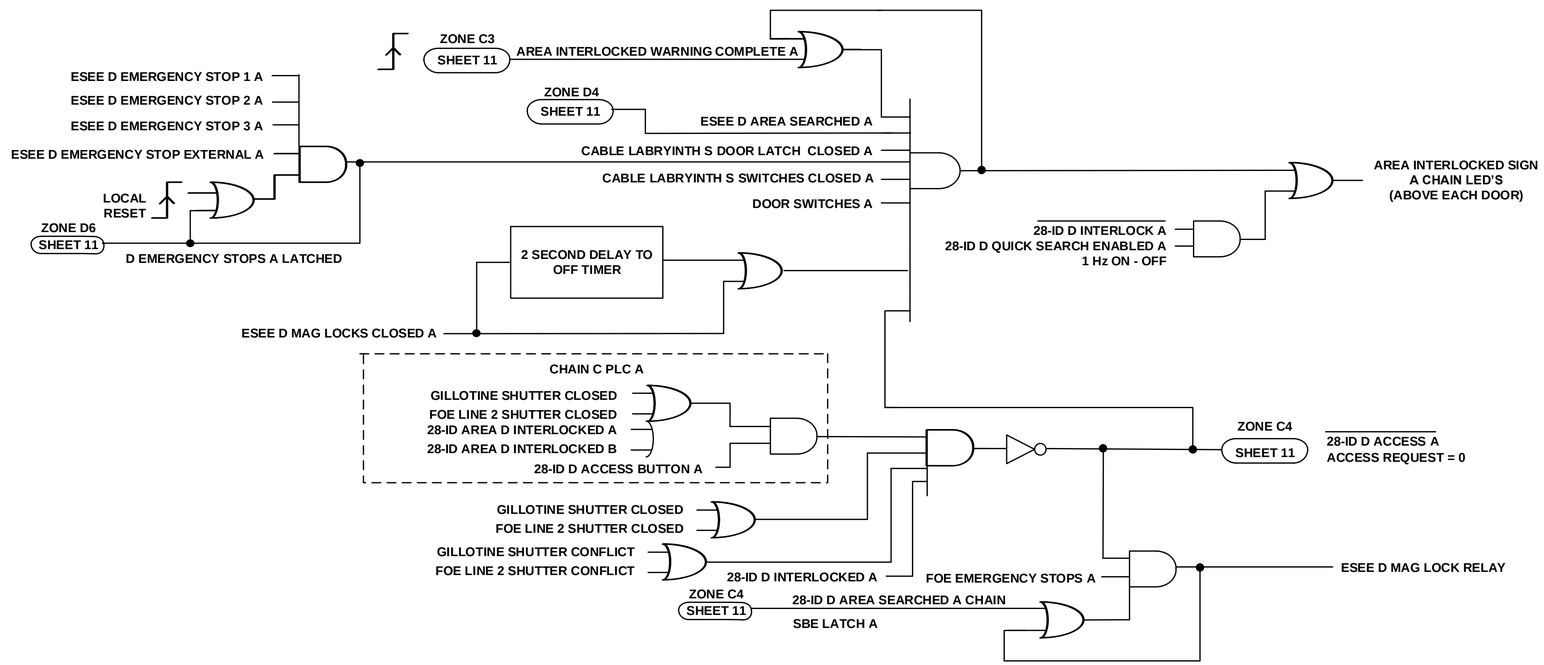

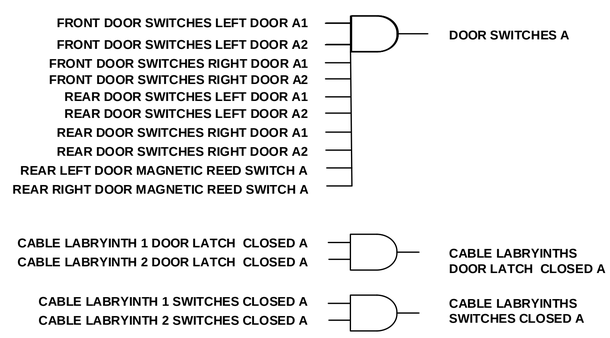

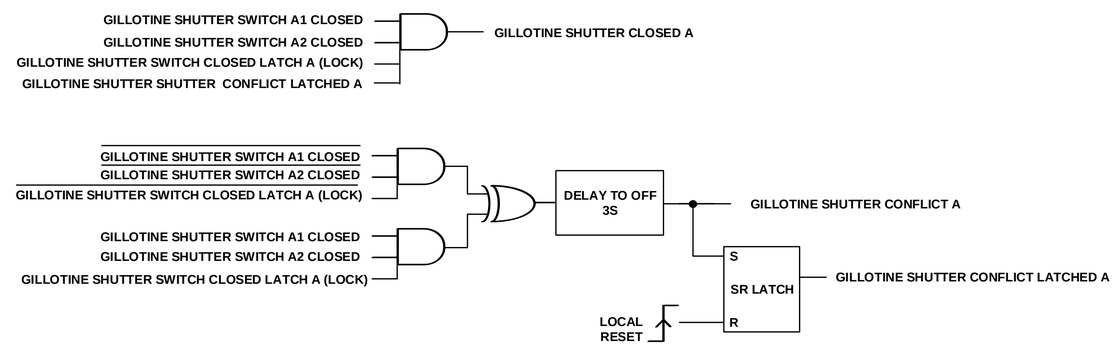

A

LT-EL-BL-EI DRAWING DIRECTORY	LT-EL-BL-EI-PPS-1280-96 DRAWING NUMBER	D REV
COMPUTER REPRODUCABLE	SCALE: N/A	SHEET 12 OF 20

LT-EL-BL-EI-PPS-1280-96

REV	DESCRIPTION	DATE	BY	CHECKED	APP
	SEE SHEET 1				

28-ID ESEE D SEARCH LOGIC B CHAIN

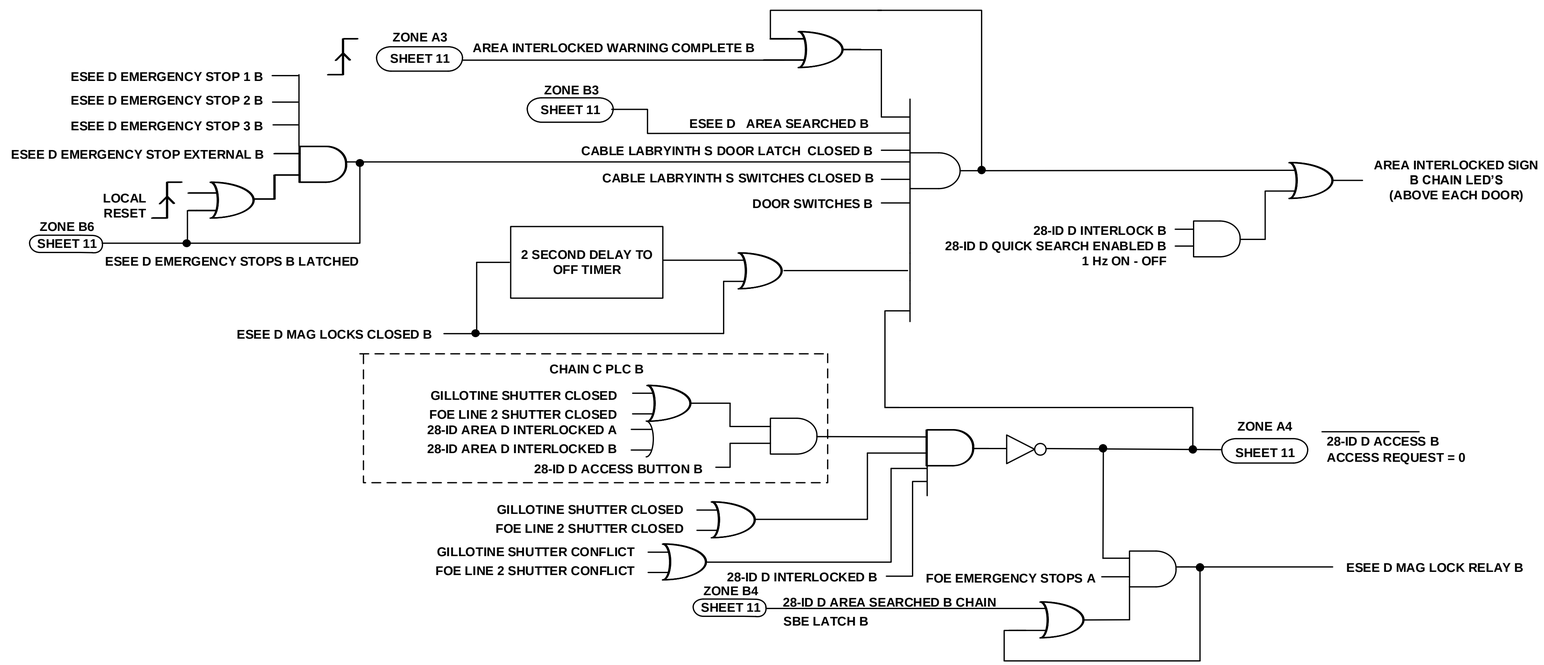

B

LT-EL-BL-EI	LT-EL-BL-EI-PPS-1280-96	D
DRAWING DIRECTORY	DRAWING NUMBER	REV

COMPUTER REPRODUCABLE | SCALE: N/A | SHEET 13 OF 20

LT-EL-BL-EI-PPS-1280-96

REV	DESCRIPTION	DATE	BY	CHECKED	APP
	SEE SHEET 1				

CHAIN C SHUTTER CONTROL

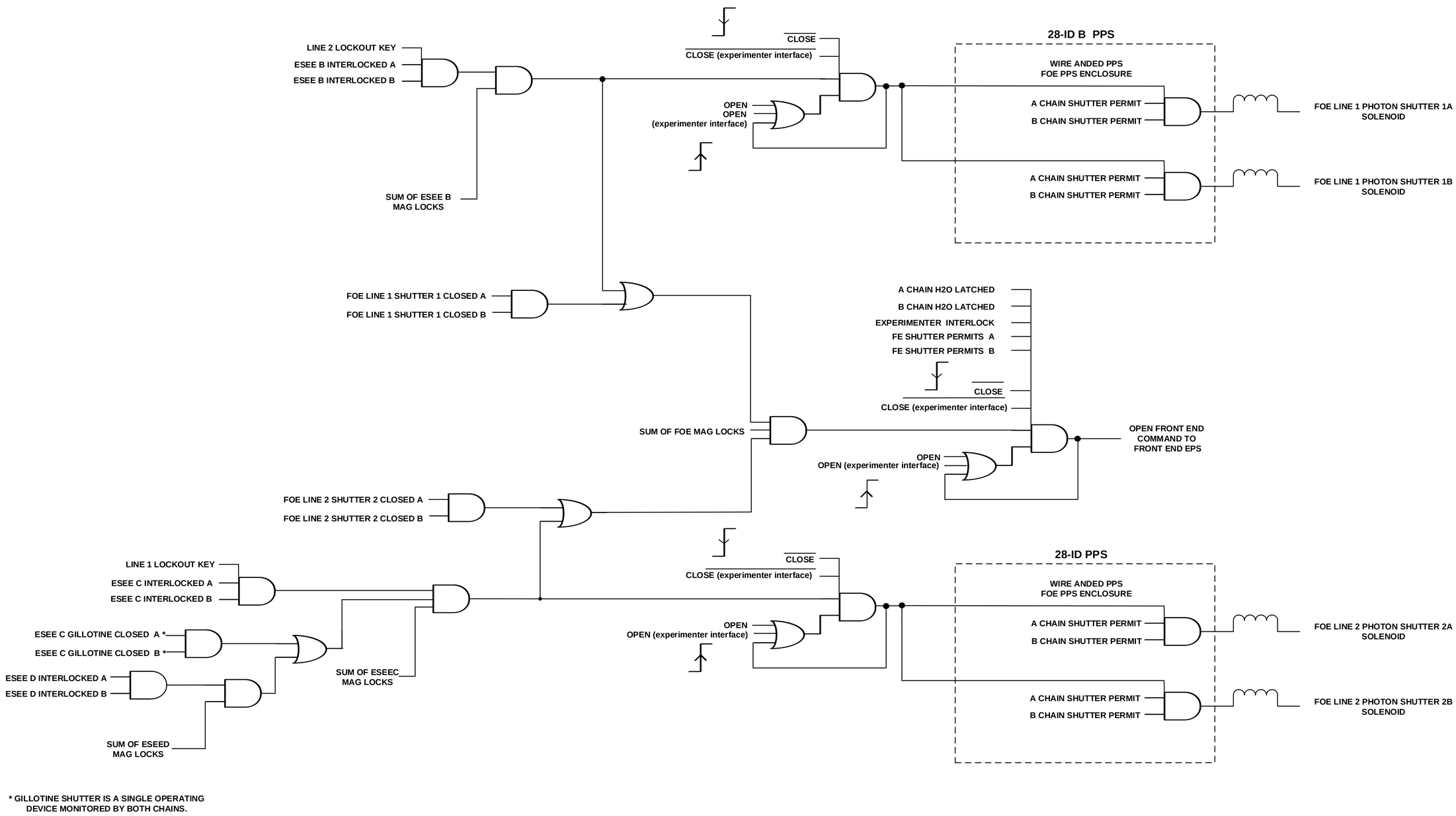

* GILLOTINE SHUTTER IS A SINGLE OPERATING DEVICE MONITORED BY BOTH CHAINS.

EPS

LT-EL-BL-EI (DRAWING DIRECTORY)	LT-EL-BL-EI-PPS-1280-96 (DRAWING NUMBER)	D (REV)
COMPUTER REPRODUCABLE	SCALE: N/A	SHEET 14 OF 20

LT-EL-BL-EI-PPS-1280-96

REV	DESCRIPTION	DATE	BY	CHECKED	APP
	SEE SHEET 1				

28-ID FOE C CHAIN DOOR CONTROL

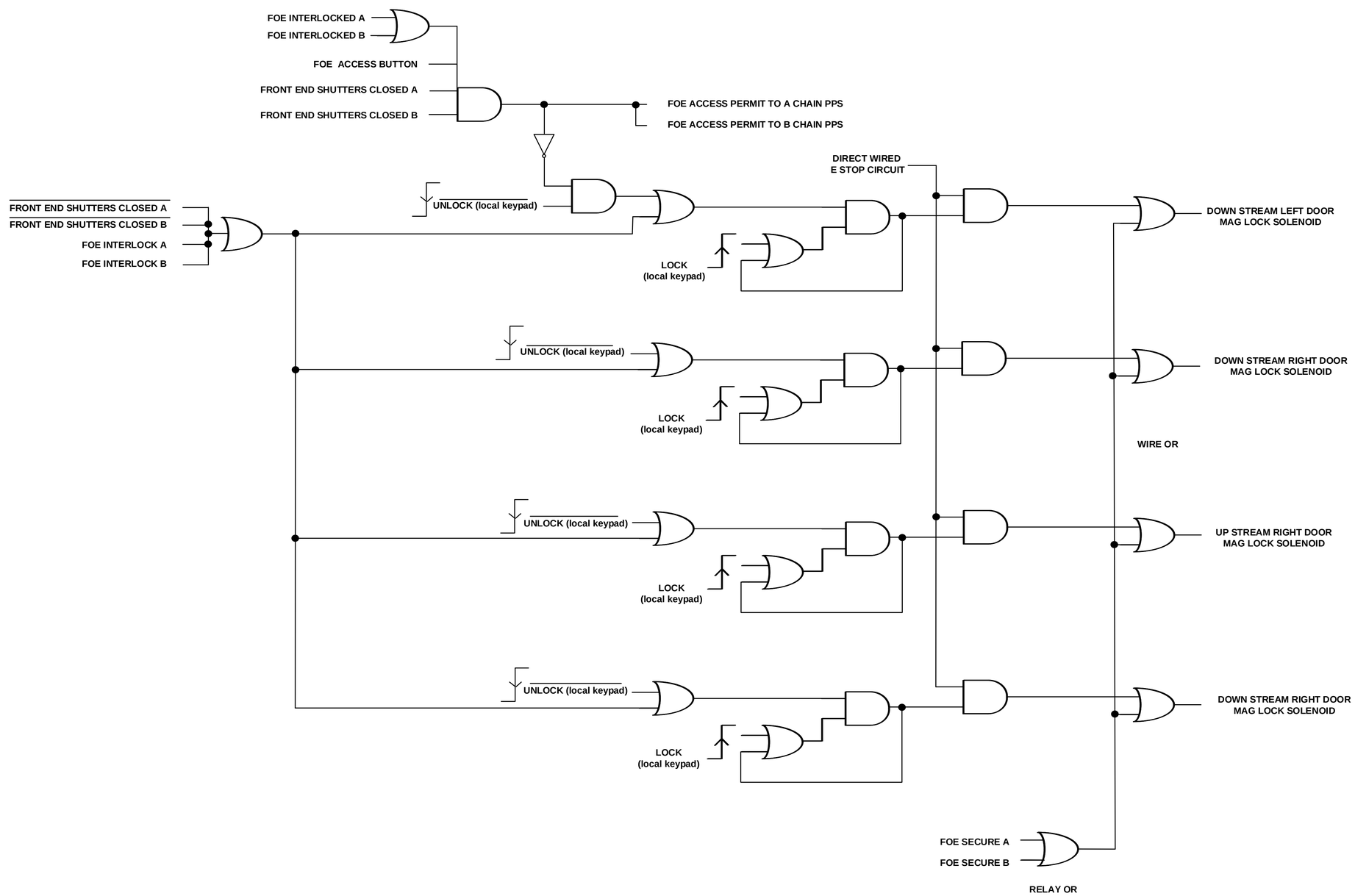

EPS

LT-EL-BL-EI (DRAWING DIRECTORY)	LT-EL-BL-EI-PPS-1280-96 (DRAWING NUMBER)	D (REV)
COMPUTER REPRODUCABLE	SCALE: N/A	SHEET 15 OF 20

LT-EL-BL-EI-PPS-1280-96

REV	DESCRIPTION	DATE	BY	CHECKED	APP
	SEE SHEET 1				

28-ID ESEE B C CHAIN DOOR CONTROL

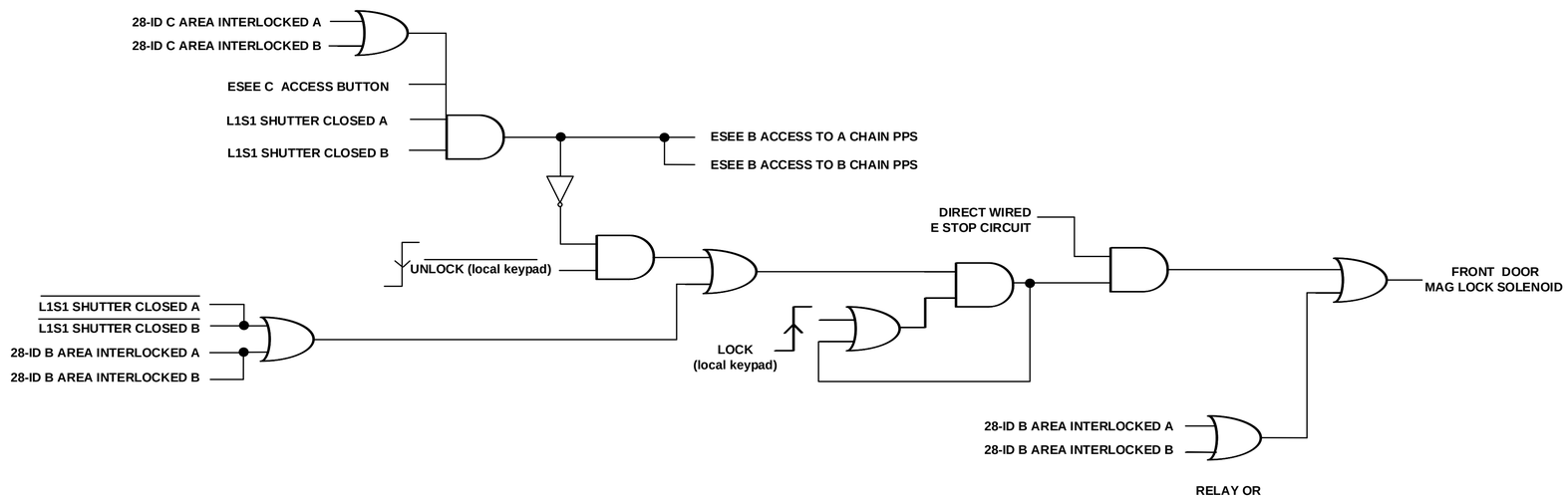

EPS

LT-EL-BL-EI (DRAWING DIRECTORY)	LT-EL-BL-EI-PPS-1280-96 (DRAWING NUMBER)	D (REV)
COMPUTER REPRODUCABLE	SCALE: N/A	SHEET 16 OF 20

LT-EL-BL-EI-PPS-1280-96

REV	DESCRIPTION	DATE	BY	CHECKED	APP
	SEE SHEET 1				

28-ID ESEE C C CHAIN DOOR CONTROL

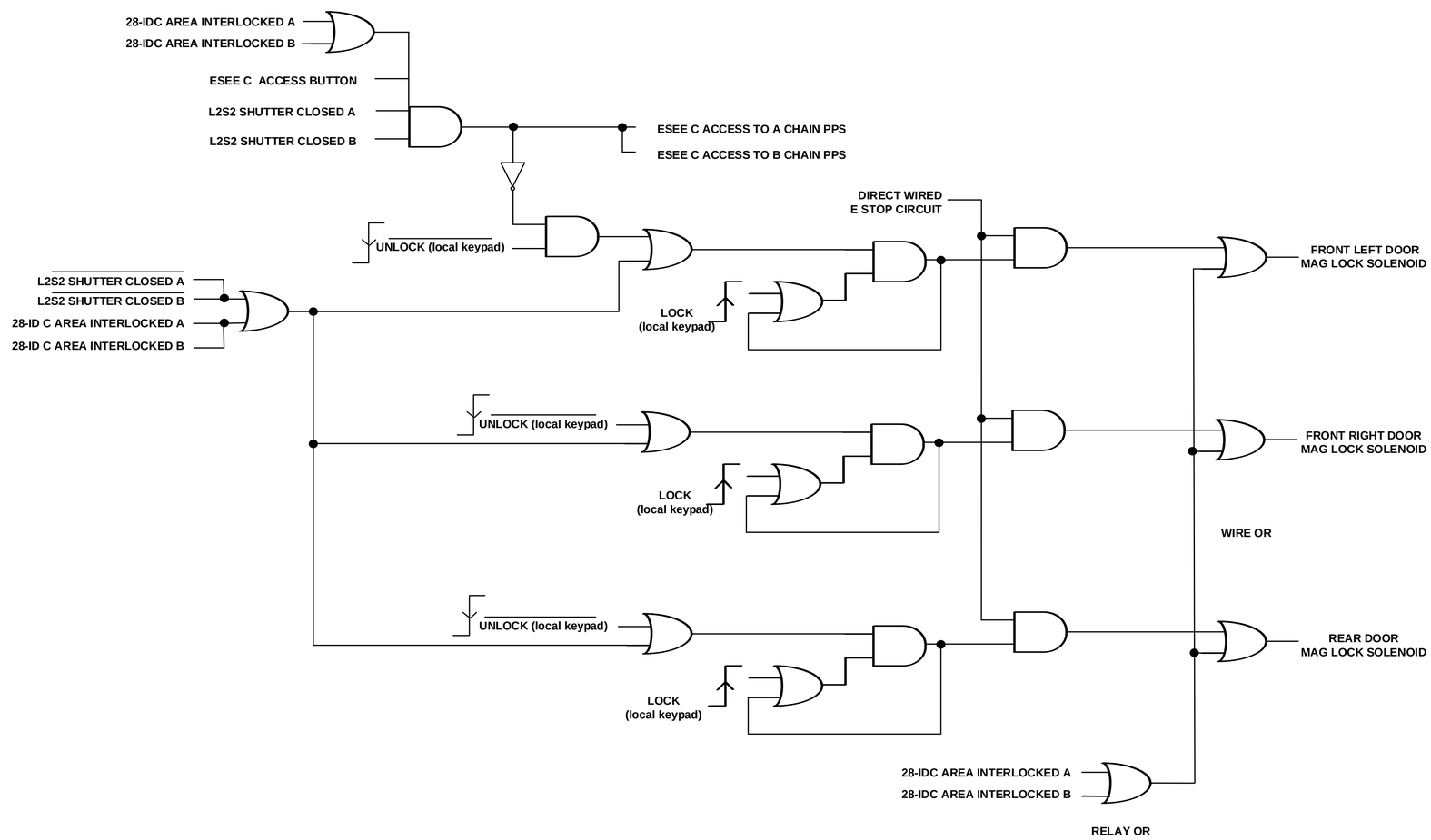

EPS

LT-EL-BL-EI	LT-EL-BL-EI-PPS-1280-96	D
DRAWING DIRECTORY	DRAWING NUMBER	REV

COMPUTER REPRODUCABLE | SCALE: N/A | SHEET 17 OF 20

LT-EL-BL-EI-PPS-1280-96

REV	DESCRIPTION	DATE	BY	CHECKED	APP
	SEE SHEET 1				

28-ID D C CHAIN DOOR CONTROL

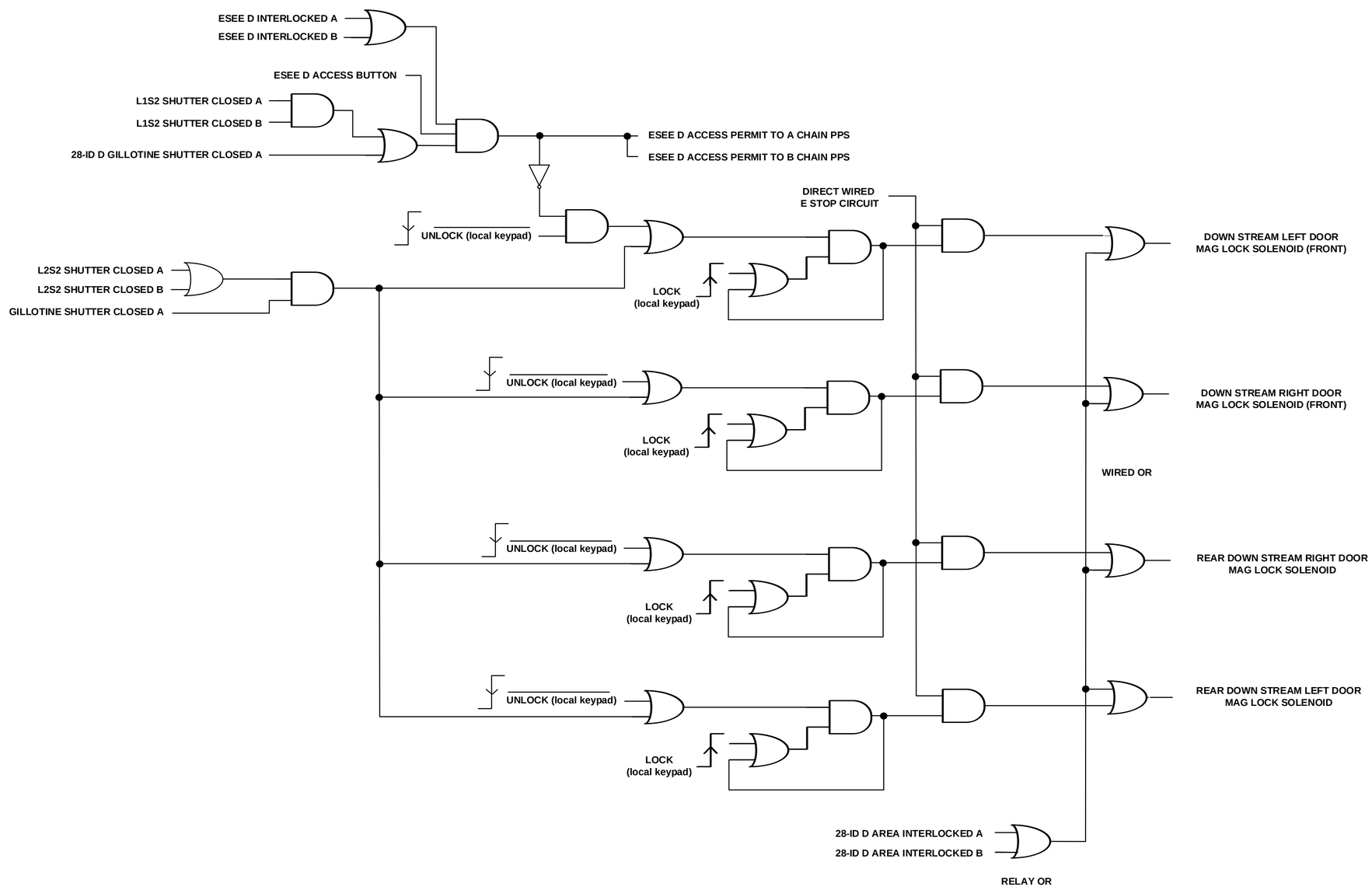

EPS

LT-EL-BL-EI (DRAWING DIRECTORY)	LT-EL-BL-EI-PPS-1280-96 (DRAWING NUMBER)	D (REV)
COMPUTER REPRODUCABLE	SCALE: N/A	SHEET 18 OF 20

LT-EL-BL-EI-PPS-1280-96

REV	DESCRIPTION	DATE	BY	CHECKED	APP
	SEE SHEET 1				

FAULTS AND ALARMS A CHAIN

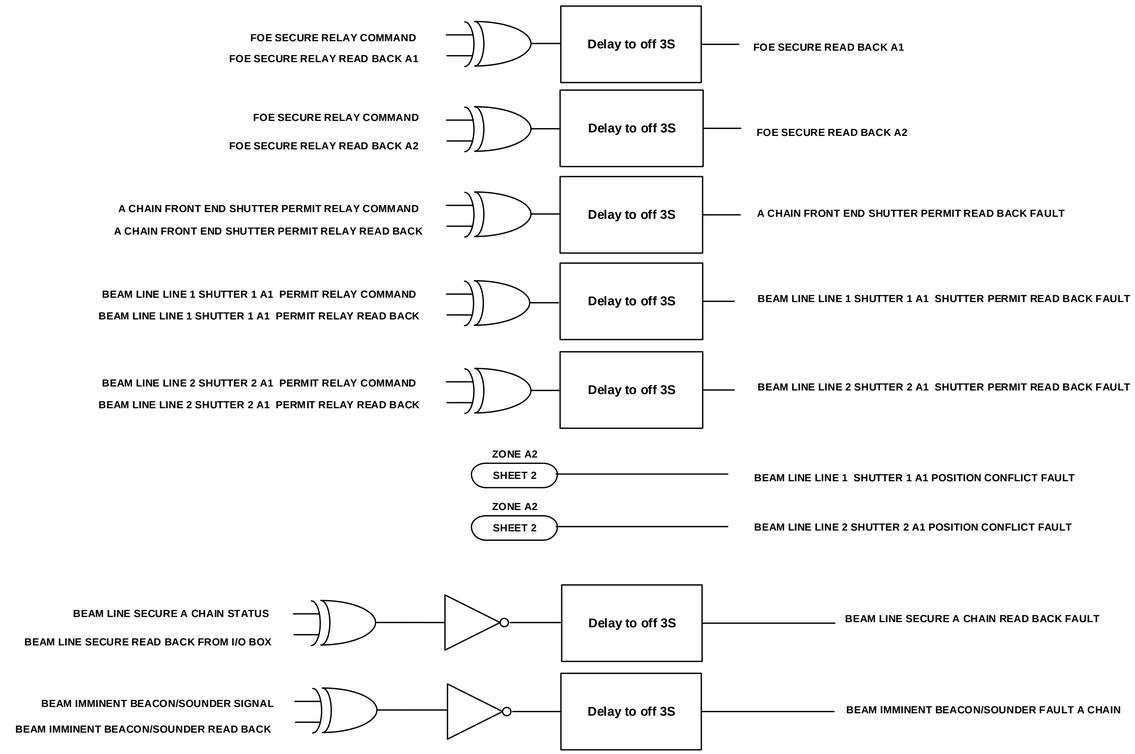

A CHAIN PROXIMITY SENSOR FAULT = DIRECT FROM SENSOR MODULE

A CHAIN HARDWARE FAULT = GENERATED FROM SYSTEM FAULT DATA

BEAMLINE FAULTS ARE SENT TO CONTROL ROOMONLY WHEN BEAMLINE IS ENABLED AT FRONT END

A

LT-EL-BL-EI (DRAWING DIRECTORY)	LT-EL-BL-EI-PPS-1280-96 (DRAWING NUMBER)	D (REV)
COMPUTER REPRODUCABLE	SCALE: N/A	SHEET 19 OF 20

LT-EL-BL-EI-PPS-1280-96

REV	DESCRIPTION	DATE	BY	CHECKED	APP
	SEE SHEET 1				

FAULTS AND ALARMS B CHAIN

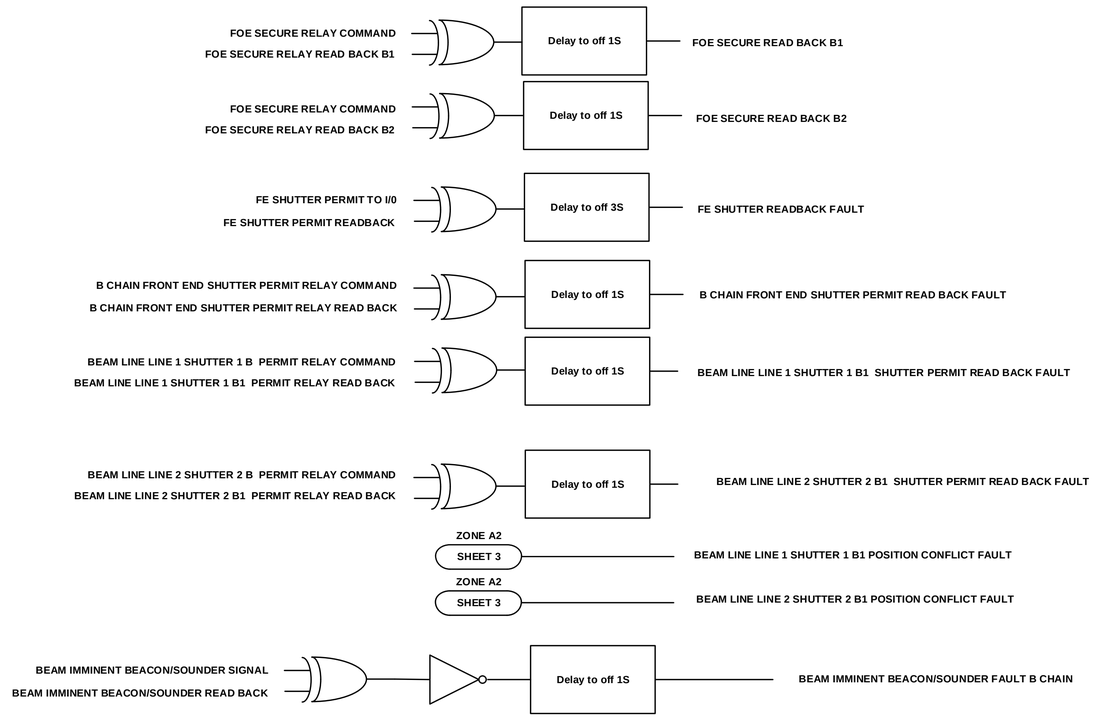

B CHAIN PROXIMITY SENSOR FAULT = DIRECT FROM SENSOR MODULE

B CHAIN HARDWARE FAULT = GENERATED FROM SYSTEM FAULT DATA

BEAMLINE FAULTS ARE SENT TO CONTROL ROOM ONLY WHEN BEAMLINE IS ENABLED AT FRONT END

Note: B CHAIN FAULTS ARE IMPLEMENTED USING FUNCTION BLOCKS

B

LT-EL-BL-EI (DRAWING DIRECTORY)	LT-EL-BL-EI-PPS-1280-96 (DRAWING NUMBER)	D (REV)
COMPUTER REPRODUCABLE	SCALE: N/A	SHEET 20 OF 20

LT-EL-BL-EI-PPS-1280-96

REV	DESCRIPTION	DATE	BY	CHECKED	APP
A	INITIAL RELEASE	9/08/2014	SEJ	JM	SB
B	REVISED PER ECN LT-ECN-015-1257	7-29-15	CG	JM	SB
C	REVISED PER ECN LT-ECN-016-1373	12/03/2016	SEJ	JM	SB
D	REVISED PER ECN LT-ECN-016-1493	12/03/2016	SEJ	JM	SB
E	REVISED PER ECN LT-ECN-016-1606	9/08/2016	SEJ	JM	SB
F	REVISED PER ECN LT-ECN-017-1728	12/14/2016	SEJ	JM	SB
G	REVISED PER ECN LT-ECN-017-1840	08/29/2017	SEJ	JM	SB

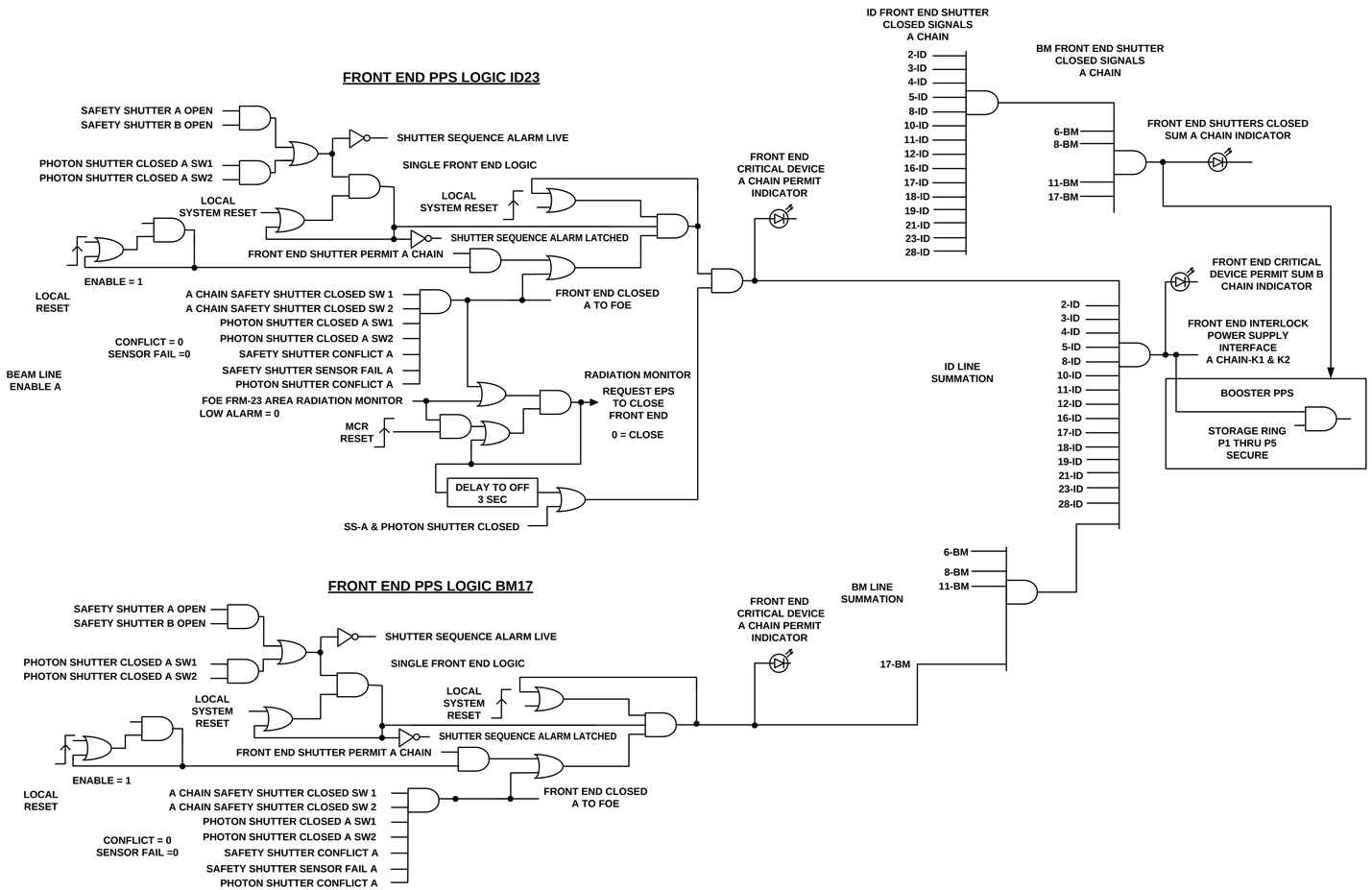

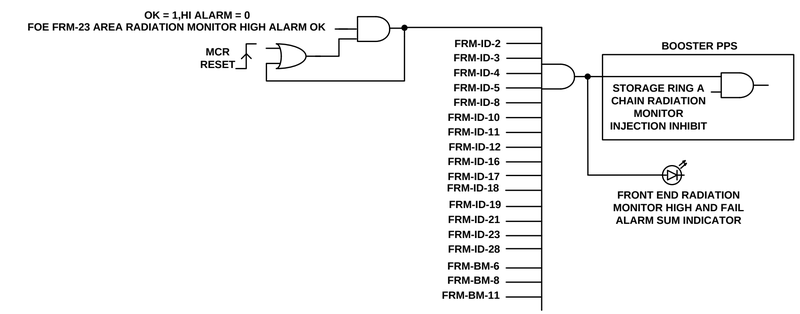

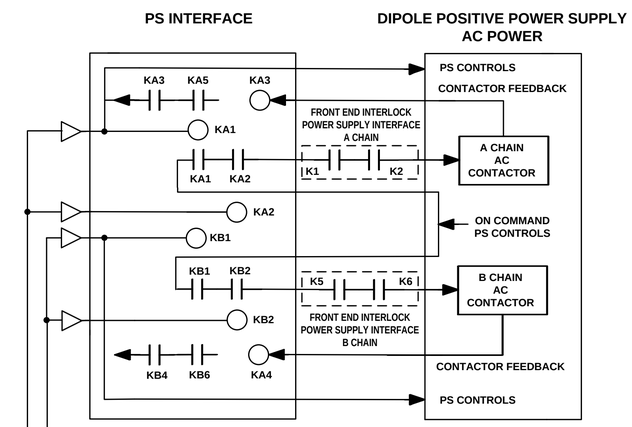

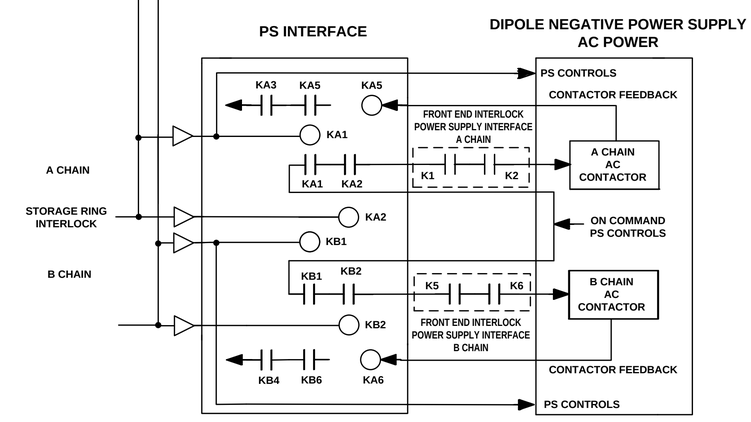

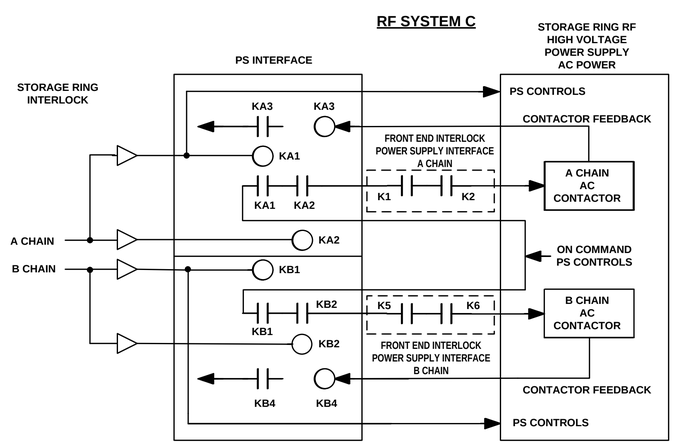

FULL NSLS2 DESIGN HAS UP TO 4 RF SYSTEMS (C SHOWN)

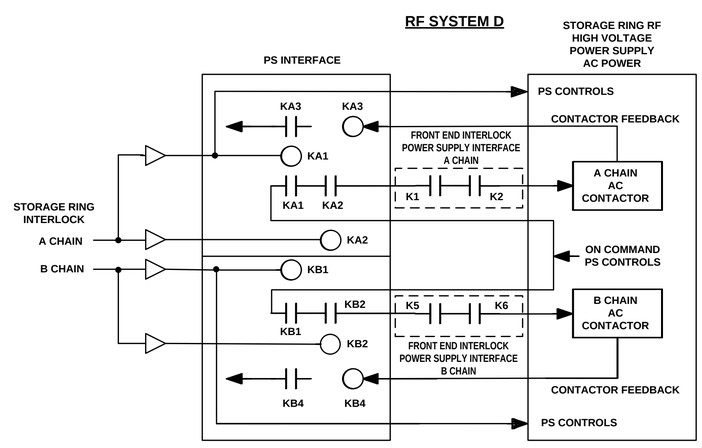

FULL NSLS2 DESIGN HAS UP TO 4 RF SYSTEMS (D SHOWN)

BROOKHAVEN NATIONAL LABORATORY

BROOKHAVEN NATIONAL LABORATORY
BROOKHAVEN SCIENCE ASSOCIATES
UPTON, NEW YORK 11973
Exploring Life's Mysteries, Protecting its Future

NSLSII NATIONAL SYNCHROTRON LIGHT SOURCE II

UNLESS OTHERWISE SPECIFIED
INTEGER TOLERANCES ± .06
DECIMAL TOLERANCES
.X ± .030
.XX ± .015
.XXX ± .010
ANGULAR TOLERANCE ± 0.5°
UNSPECIFIED RADII .02 MAX
125 FINISH — BREAK SHARP CORNERS AND EDGES
MAX .03 MIN .005

UNLESS OTHERWISE SPECIFIED DIMENSIONS ARE IN INCHES
DIMENSIONS IN [ ] ARE MILLIMETERS EQUIV. FOR REF. ONLY

ESH&Q RISK LEVEL A-1

INTERPRET DRAWING AS PER ANSI Y14.5 OR Y32.2

OUTSTANDING ECN'S

		DATE
DRWN BY	S. JARZABKOWSKI	9/08/2014
CHK BY	J. MALLEY	9/08/2014
ENG APP	S. BUDA	9/08/2014
SUPV APP	G. GANETIS	9/10/2014
QA APP	E. CHESWICK	9/08/2014
ESH APP	R. LEE	9/10/2014

WIRING DIAGRAM, FRONT END PPS SYSTEM LOGIC

DRAWING DIRECTORY: LT-EL-BL-EI
DRAWING NUMBER: LT-EL-BL-EI-PPS-0101-92
REV: G

WBS # 1.03.06.01.03
SCALE: N/A
SHEET 1 OF 3

JOB NUMBER
USED ON DWG. NO.

LT-EL-BL-EI-PPS-0101-92

REV	DESCRIPTION	DATE	BY	CHECKED	APP
	SEE SHEET 1				

FRONT END PPS LOGIC ID23

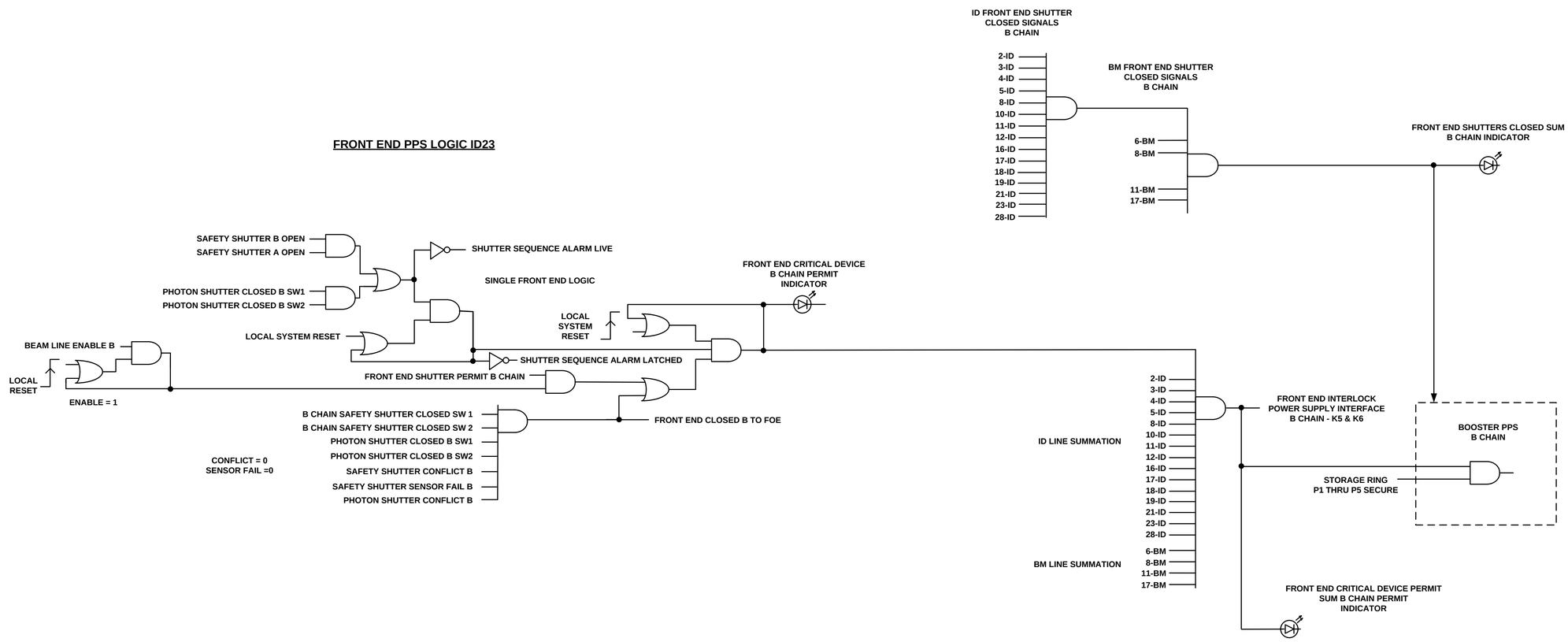

LT-EL-BL-EI	LT-EL-BL-EI-PPS-0101-92	G
DRAWING DIRECTORY	DRAWING NUMBER	REV
COMPUTER REPRODUCIBLE	SCALE: N/A	SHEET 2 OF 3

LT-EL-BL-EI-PPS-0101-92

REV	DESCRIPTION	DATE	BY	CHECKED	APP
	SEE SHEET 1				

A CHAIN

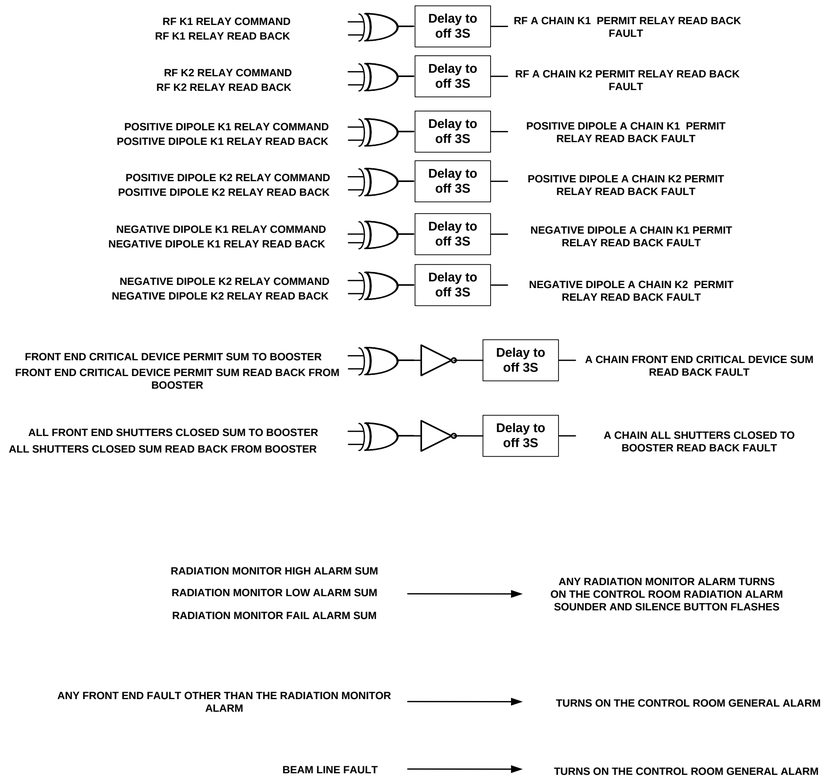

B CHAIN

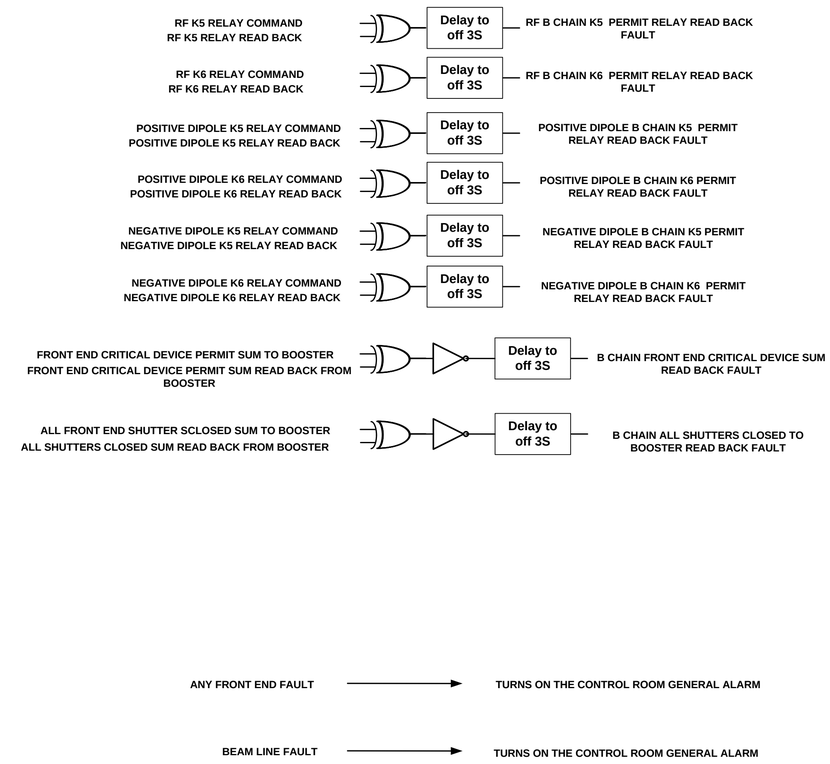

LT-EL-BL-EI-PPS-0101-92

LT-EL-BL-EI (DRAWING DIRECTORY)	LT-EL-BL-EI-PPS-0101-92 (DRAWING NUMBER)	G (REV)
COMPUTER REPRODUCIBLE	SCALE: N/A	SHEET 3 OF 3

National Synchrotron Light Source

Building 743, National Synchrotron Light Source
Brookhaven National Laboratory
Upton, NY 11973-5000
Phone 631 344-2117
Fax 631 344-3238
zhong@bnl.gov

managed by Brookhaven Science Associates
for the U.S. Department of Energy

Memo

Date: January 31, 2018
To: George Ganetis, and Scott Buda
From: Zhong Zhong (chair), NSLS II Radiation Safety Committee
Subject: Radiation Safety Committee endorsement of the PPS design of 7-ID (SST) and 28-ID (PDF) beamlines

Dear George and Scott

I would like to thank you for inviting the RSC sub-committee for PPS (personal protection system) interlock, Mohamed Benmerrouche, Dana Beavis, Robert Lee, and myself, to the review of the PPS logic diagrams for 7-ID (SST) and 28-ID (PDF) beamlines.

The following logic diagrams were reviewed:

1. Wiring diagram, 7-ID FOE search logic, ID7 FOE Beamline PPS component layout, A Chain and B chain search logic, 17 sheets total.
2. Wiring diagram, LT-EL-BL-EI-PPS-1280-96, rev. D by S. Buda, includes 28-ID FOE search logic, 28-ID ESEE B search logic (new), Chain C door control (new) .20 sheets.

7-ID consists of the FOE and experimental endstation chambers on the experimental floor. Similar to CSX and SIX, SST beamline uses vacuum switches, located at each of the experimental endstations, to control access to the endstation chambers on the experimental floor.

28-ID logic diagram serving the XPD beamlines (endstations C and D) was reviewed before. The new addition of EESE B (PDF beamline) search logic was denoted “new” in the updated logic diagram. Access to EESE B is allowed when photon shutters are closed. As before, access to FOE (enclosure A) is allowed only when front-end shutters are closed.

While the IWG should be the primary reviewer for interlock logic diagrams, the RSC brings in broader expertise in areas such as radiation physics and PS shielding policy. This review by the RSC sub-committee compliments the shielding and ray-tracing reviews, recently for SST and in the future for PDF, by the RSC.

As a result of the sub-committee review, the RSC concurs that the PPS designs of 7-ID and 28-ID beamlines meet Photon Sciences shielding policy.

Radiation Safety Committee

Name	*Expertise*	*Directorate*
Andrew Ackerman	Deputy ESH Manager	PS
Dana Beavis	Experimental Nuclear Particle Physics	NPP
Andi Barbour	Beam Line Physicist	PS
Mohamed Benmerrouche	Nuclear and Radiation Physics	PS
Scott Buda	Personnel Protective Systems	PS
Ray Fliller	Accelerator Physicist	PS
Wah-Keat Lee	Beam Line Physicist	PS
Boris Podobedov	Accelerator Physics	PS
Chuck Schaefer	Accelerator SME	ESH
Lutz Wiegart	Beam Line Physicist	PS
Zhong Zhong	Beam Line Physicist	PS
Emil Zitvogel	Accelerator Operations	PS
Ashley Shoemaker-Skokov	Administrative Support	PS

Ray-tracing sub-committee

Andrew Ackerman	Deputy ESH Manager	PS
Mary Carlucci-Dayton	Mechanical Engineer	PS
Wah-Keat Lee	Beam Line Physicist	PS
Chuck Schaefer	Accelerator SME	ESH
Christopher Stelmach	Designer	PS
Lutz Wiegart	Beam Line Physicist	PS
Zhong Zhong	Beam Line Physicist	PS

PPS sub-committee

Dana Beavis	Experimental Nuclear Particle Physics	NPP
Mohamed Benmerrouche	Nuclear and Radiation Physics	PS
Scott Buda	Personnel Protective Systems	PS
Robert Lee	ESH manager	PS
Zhong Zhong	Beam Line Physicist	PS

RSC checklist sub-committee

Andi Barbour	Beam Line Physicist	PS
Mohamed Benmerrouche	Nuclear and Radiation Physics	PS
Ray Fliller	Accelerator Physicist	PS

REV	DESCRIPTION	DATE	BY	CHECKED	APP
A	INITIAL RELEASE	9/06/2014	SEJ	JM	SB
B	REVISED PER ECN LT-ECN-014-992	9/29/2014	SEJ	JM	SB
C	REVISED PER ECN LT-ECN-014-1102	12/22/2014	SEJ	JM	SB
D	REVISED PER ECN LT-ECN-015-1273	8/22/2015	CG	JM	SB
E	REVISED PER ECN LT-ECN-017-1843	2/08/2018	SEJ	JM	SB

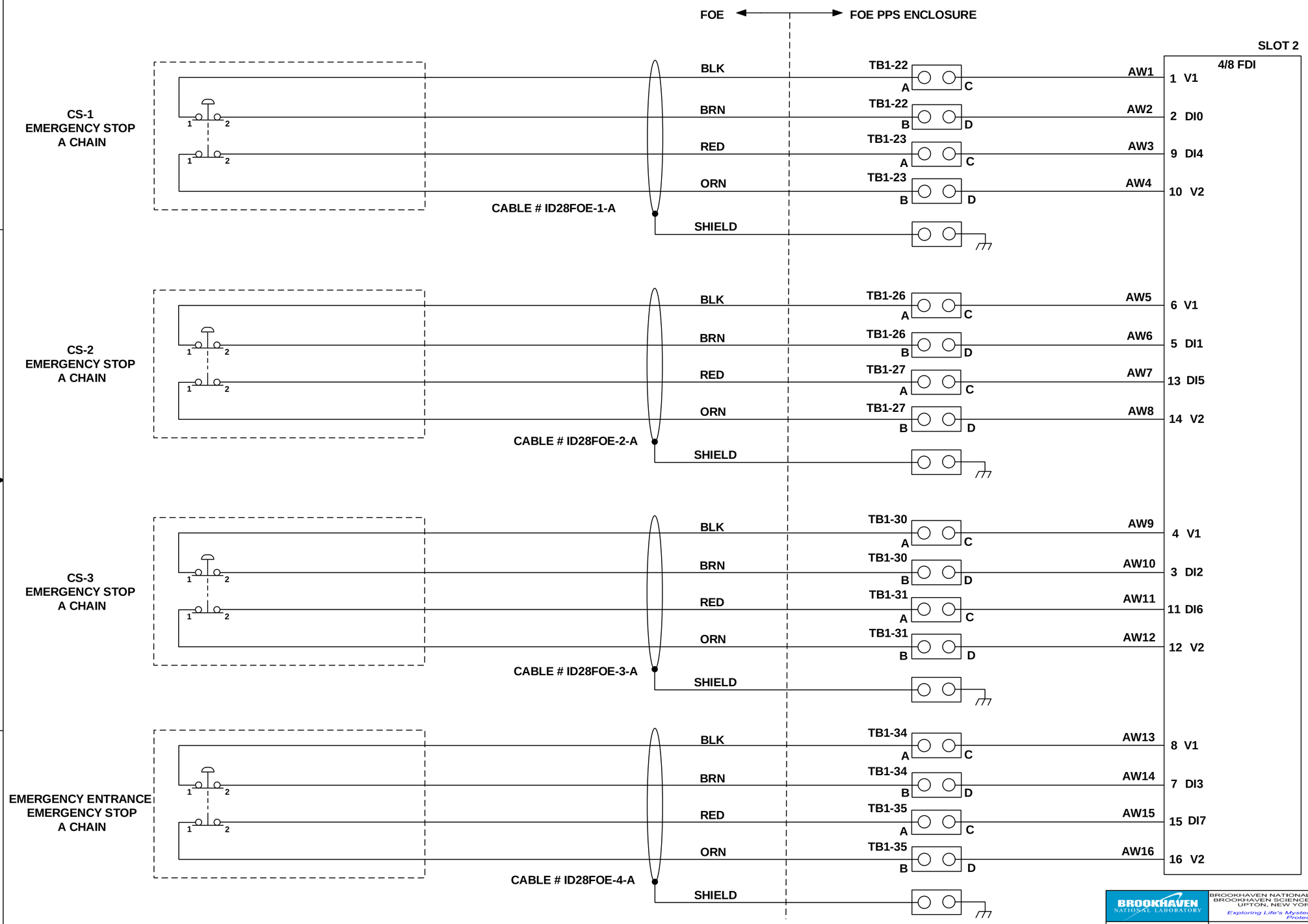

A

LT-EL-BL-EI-PPS-1280-91

BROOKHAVEN NATIONAL LABORATORY

BROOKHAVEN NATIONAL LABORATORY
BROOKHAVEN SCIENCE ASSOCIATES
UPTON, NEW YORK 11973
Exploring Life's Mysteries, Protecting its Future

NSLS II NATIONAL SYNCHROTRON LIGHT SOURCE II

UNLESS OTHERWISE SPECIFIED
INTEGER TOLERANCES ± .06
DECIMAL TOLERANCES
.X ± .030
.XX ± .015
.XXX ± .010
ANGULAR TOLERANCE ± 0.5°
UNSPECIFIED RADII .02 MAX
125 BREAK SHARP CORNERS AND EDGES
FINISH MAX .03 MIN .005

UNLESS OTHERWISE SPECIFIED DIMENSIONS ARE IN INCHES DIMENSIONS IN [ ] ARE MILLIMETERS EQUIV. FOR REF. ONLY

ESH&Q RISK LEVEL A-1

INTERPRET DRAWING AS PER ANSI Y14.5 OR Y32.2

OUTSTANDING ECN'S

		DATE
DRWN BY	S. JARZABKOWSKI	9/05/2014
CHK BY	J.MALLEY	9/05/2014
ENG APP	S. BUDA	9/05/2014
SUPV APP	G. GANETIS	9/06/2014
QA APP	E.CHESWICK	9/05/2014
ESH APP	R. LEE	9/05/2014

WIRING DIAGRAM, 28-ID-FOE (XPD-FOE) A CHAIN & B CHAIN

LT-EL-BL-EI (DRAWING DIRECTORY) LT-EL-BL-EI-PPS-1280-91 (DRAWING NUMBER) E (REV)

COMPUTER REPRODUCABLE

SCALE: N/A

SHEET 1 OF 46

JOB NUMBER

USED ON DWG. NO.

REV	DESCRIPTION	DATE	BY	CHECKED	APP
	SEE SHEET 1				

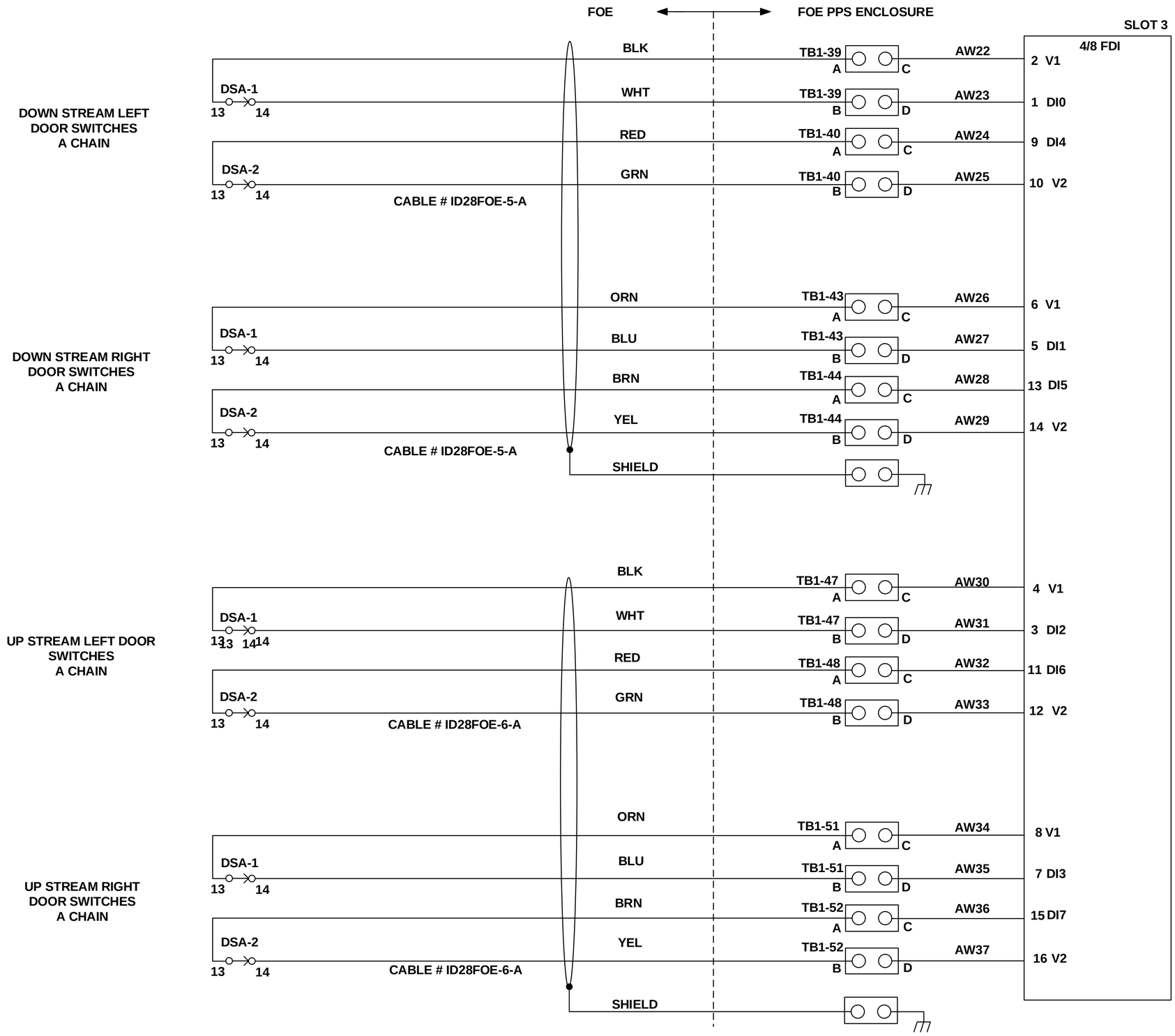

A

LT-EL-BL-EI (DRAWING DIRECTORY)	LT-EL-BL-EI-PPS-1280-91 (DRAWING NUMBER)	E (REV)
COMPUTER REPRODUCABLE	SCALE: N/A	SHEET 2 OF 46

LT-EL-BL-EI-PPS-1280-91

REV	DESCRIPTION	DATE	BY	CHECKED	APP
	SEE SHEET 1				

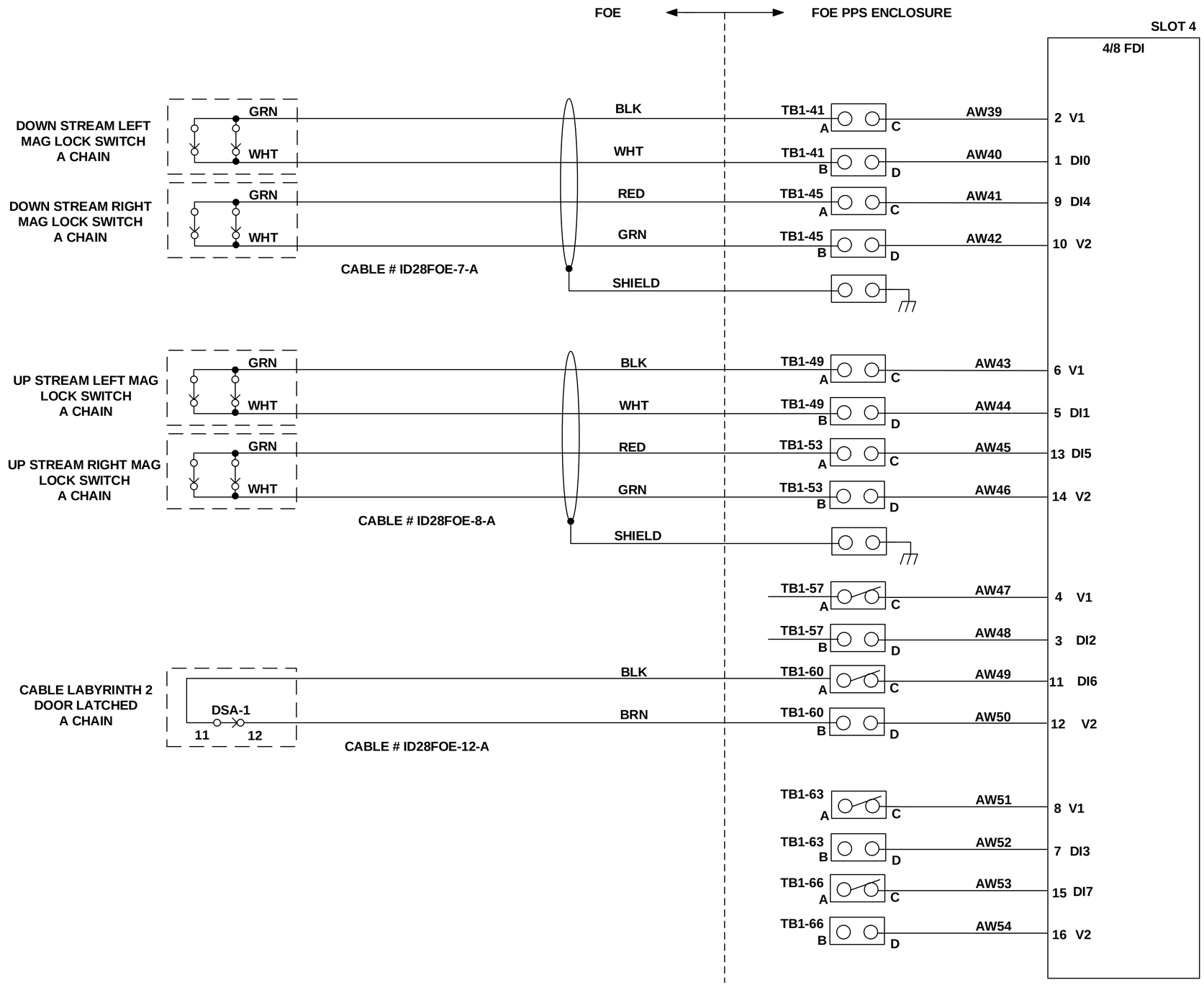

A

LT-EL-BL-EI (DRAWING DIRECTORY)	LT-EL-BL-EI-PPS-1280-91 (DRAWING NUMBER)	E (REV)
COMPUTER REPRODUCABLE	SCALE: N/A	SHEET 3 OF 46

LT-EL-BL-EI-PPS-1280-91

REV	DESCRIPTION	DATE	BY	CHECKED	APP
	SEE SHEET 1				

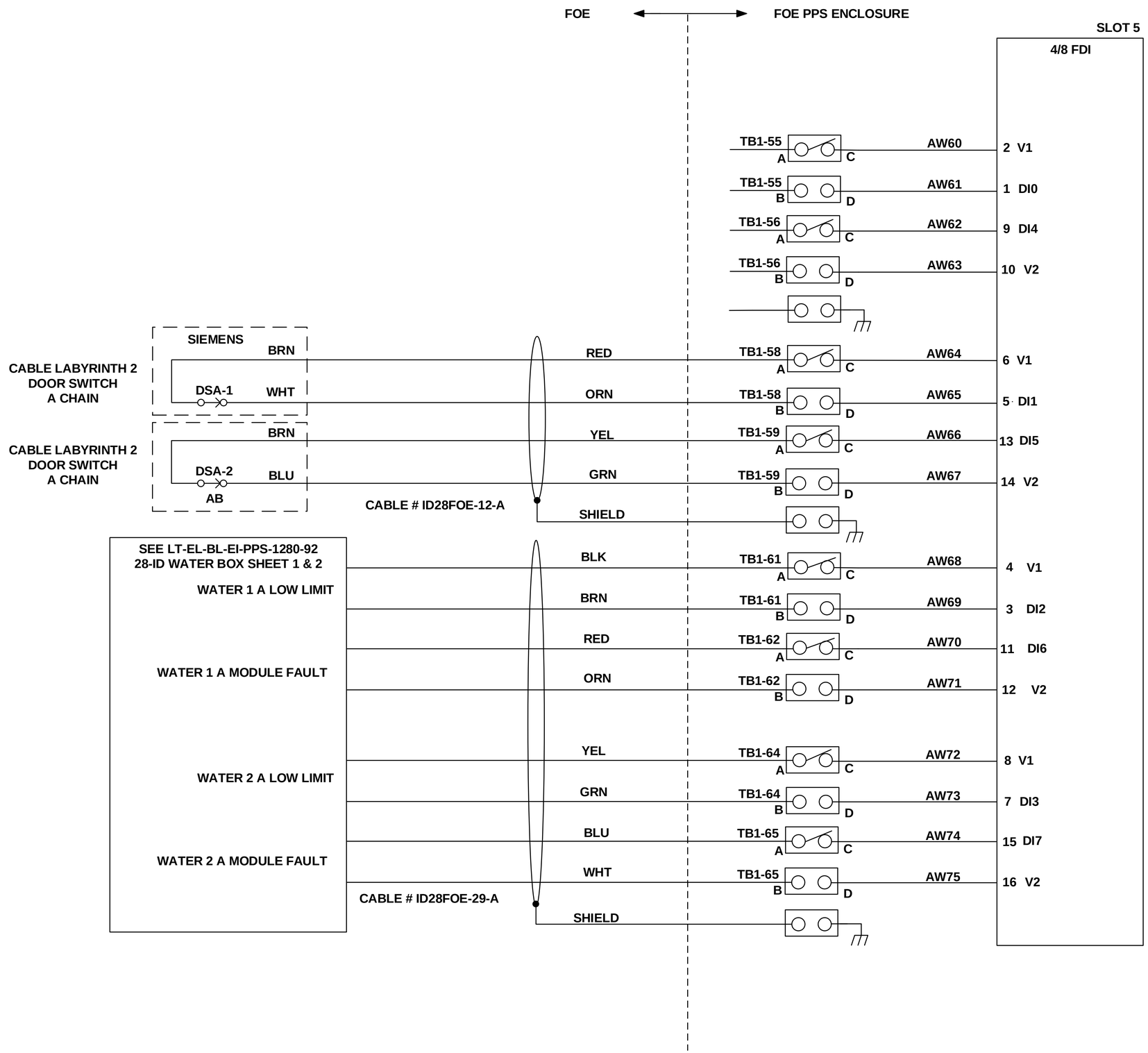

A

LT-EL-BL-EI (DRAWING DIRECTORY)	LT-EL-BL-EI-PPS-1280-91 (DRAWING NUMBER)	E (REV)
COMPUTER REPRODUCABLE	SCALE: N/A	SHEET 4 OF 46

LT-EL-BL-EI-PPS-1280-91

REV	DESCRIPTION	DATE	BY	CHECKED	APP
	SEE SHEET 1				

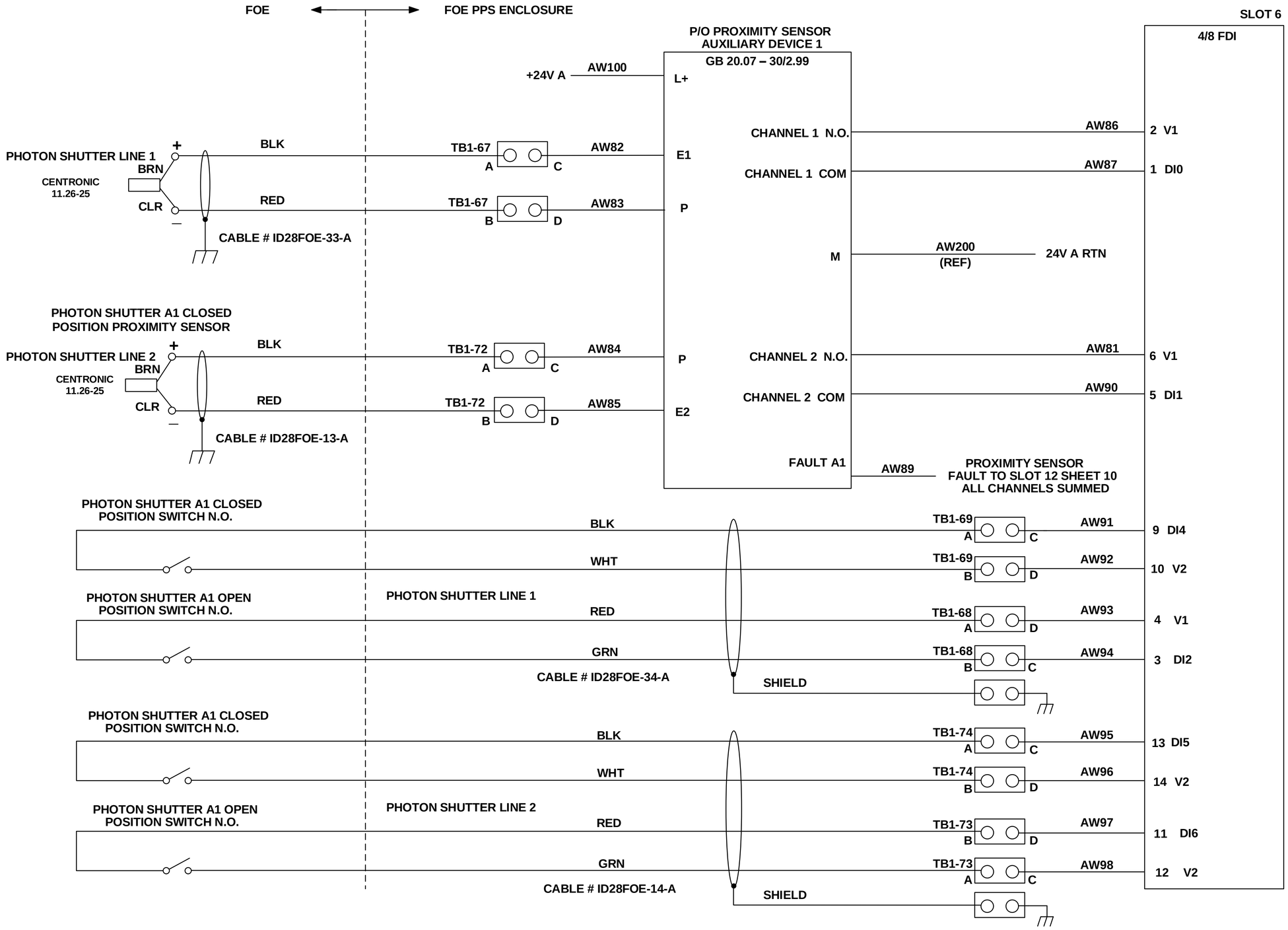

A

LT-EL-BL-EI	LT-EL-BL-EI-PPS-1280-91	E
DRAWING DIRECTORY	DRAWING NUMBER	REV

COMPUTER REPRODUCABLE | SCALE: N/A | SHEET 5 OF 46

LT-EL-BL-EI-PPS-1280-91

REV	DESCRIPTION	DATE	BY	CHECKED	APP
	SEE SHEET 1				

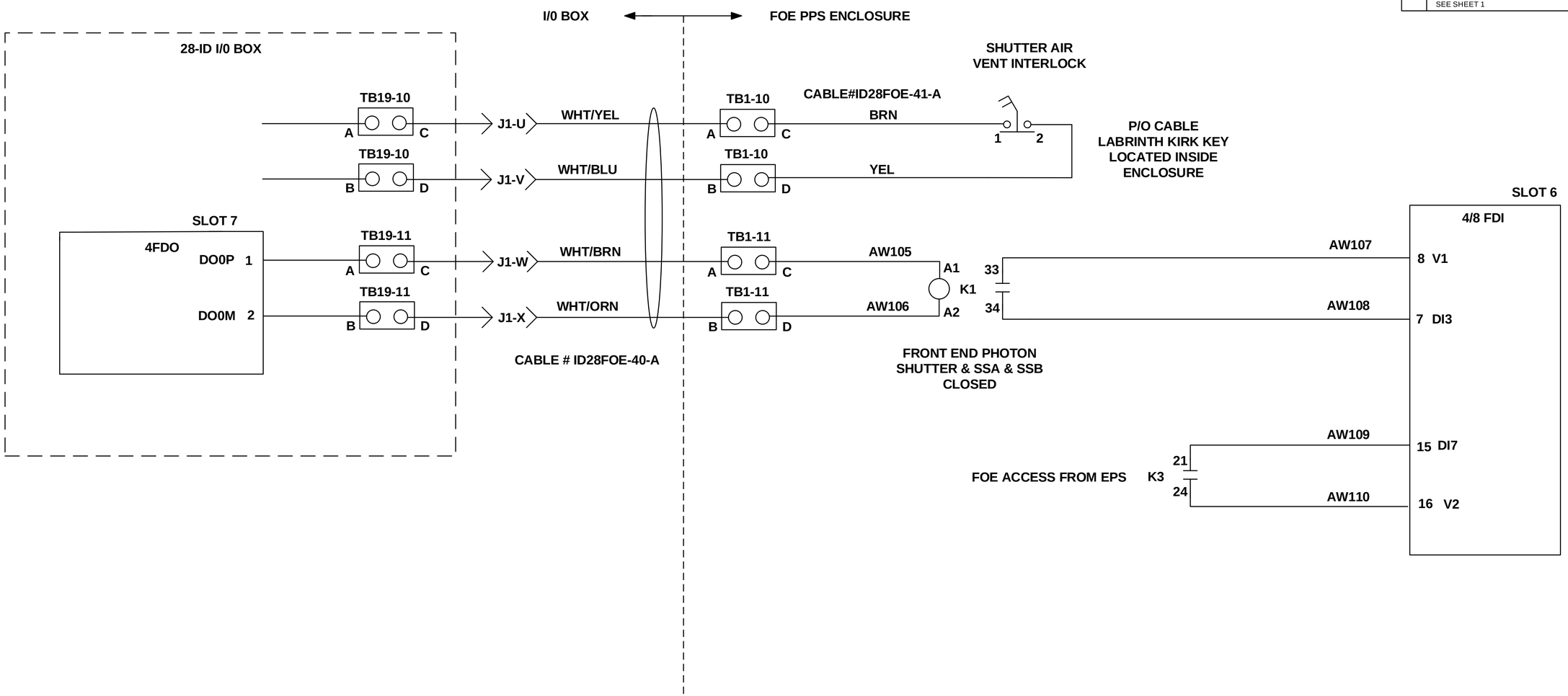

A

LT-EL-BL-EI	LT-EL-BL-EI-PPS-1280-91	E
DRAWING DIRECTORY	DRAWING NUMBER	REV

COMPUTER REPRODUCABLE | SCALE: N/A | SHEET 6 OF 46

LT-EL-BL-EI-PPS-1280-91

REV	DESCRIPTION	DATE	BY	CHECKED	APP
	SEE SHEET 1				

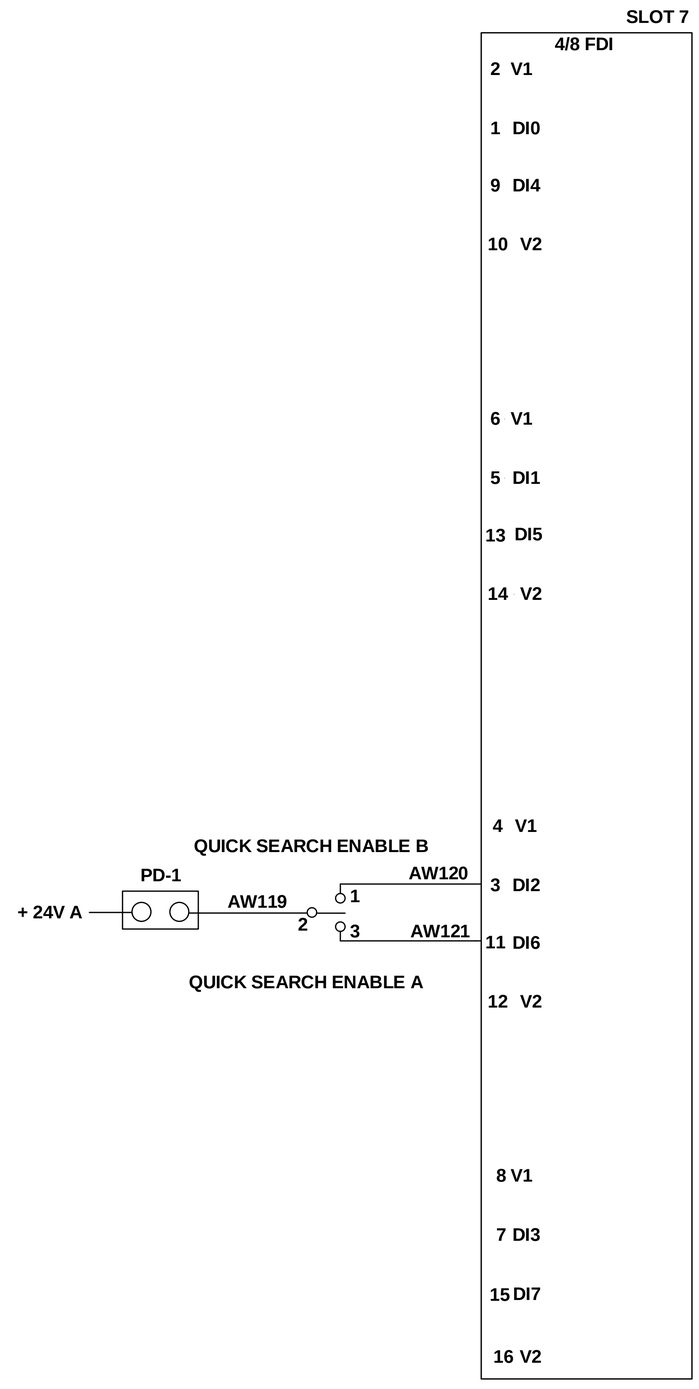

A

LT-EL-BL-EI DRAWING DIRECTORY	LT-EL-BL-EI-PPS-1280-91 DRAWING NUMBER	E REV
COMPUTER REPRODUCABLE	SCALE: N/A	SHEET 7 OF 46

LT-EL-BL-EI-PPS-1280-91

REV	DESCRIPTION	DATE	BY	CHECKED	APP
	SEE SHEET 1				

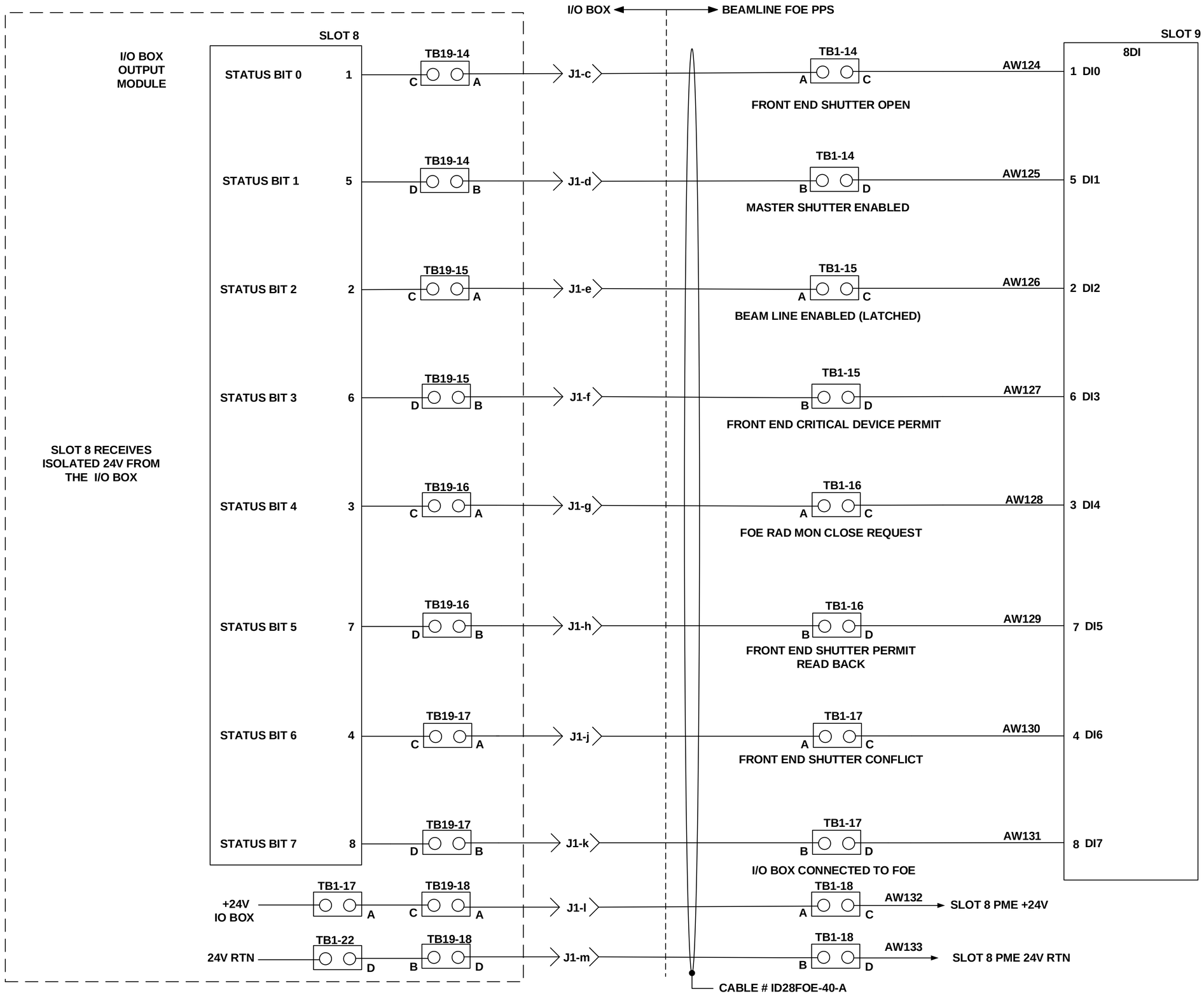

A

LT-EL-BL-EI (DRAWING DIRECTORY)	LT-EL-BL-EI-PPS-1280-91 (DRAWING NUMBER)	E (REV)
COMPUTER REPRODUCABLE	SCALE: N/A	SHEET 8 OF 46

LT-EL-BL-EI-PPS-1280-91

REV	DESCRIPTION	DATE	BY	CHECKED	APP
	SEE SHEET 1				

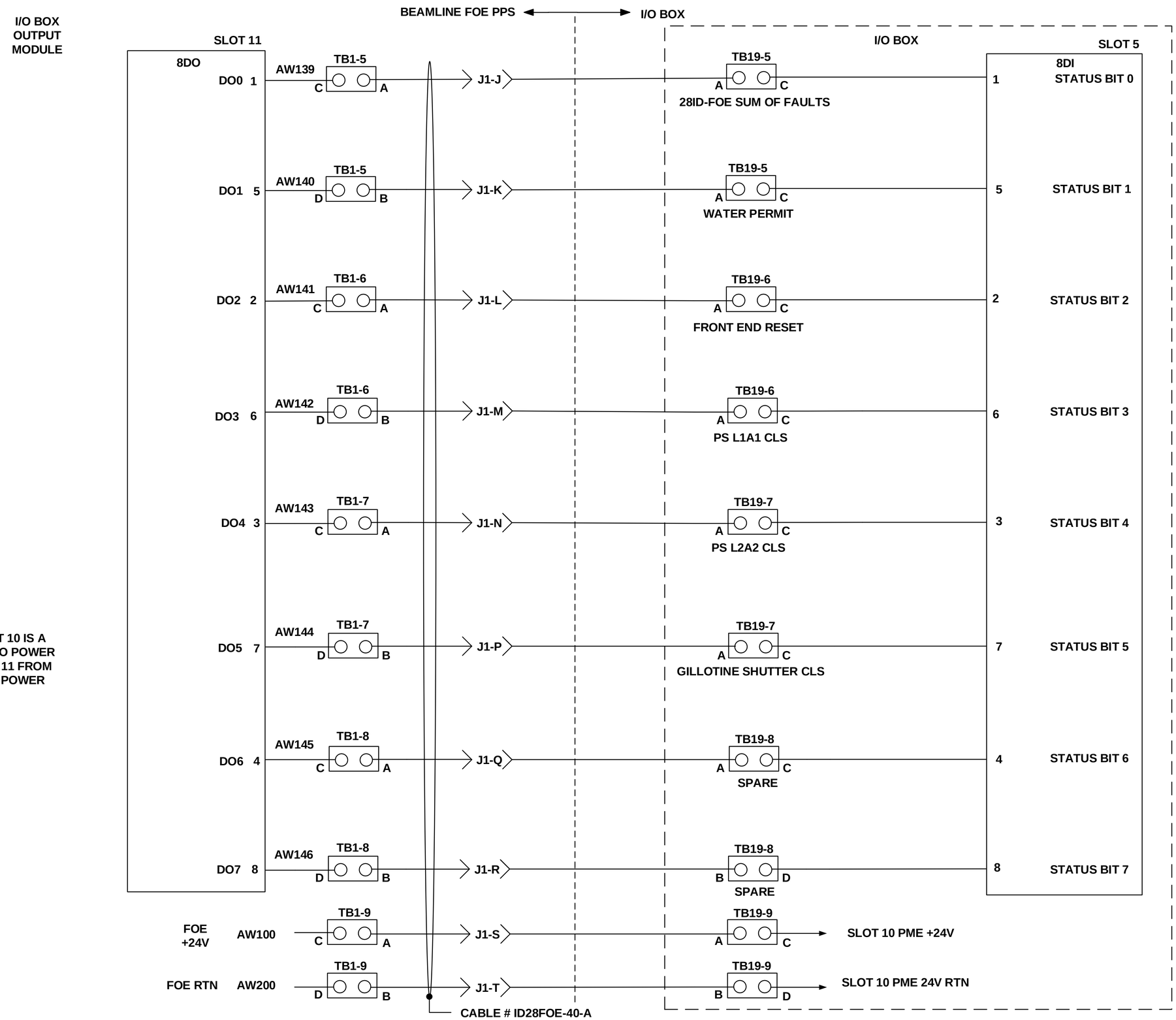

A

LT-EL-BL-EI (DRAWING DIRECTORY)	LT-EL-BL-EI-PPS-1280-91 (DRAWING NUMBER)	E (REV)
COMPUTER REPRODUCABLE	SCALE: N/A	SHEET 9 OF 46

LT-EL-BL-EI-PPS-1280-91

REV	DESCRIPTION	DATE	BY	CHECKED	APP
	SEE SHEET 1				

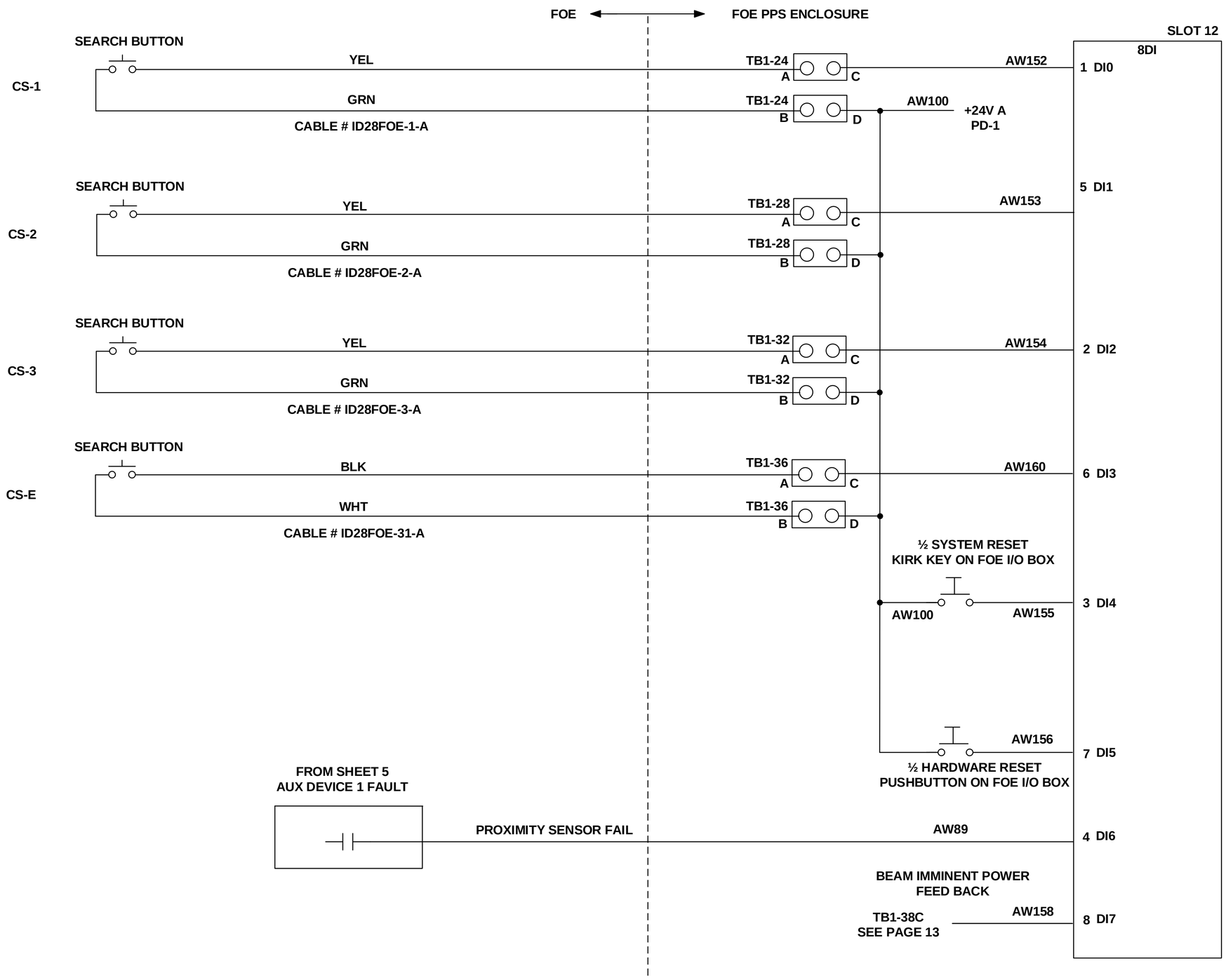

A

LT-EL-BL-EI (DRAWING DIRECTORY)	LT-EL-BL-EI-PPS-1280-91 (DRAWING NUMBER)	E (REV)
COMPUTER REPRODUCABLE	SCALE: N/A	SHEET 10 OF 46

LT-EL-BL-EI-PPS-1280-91

REV	DESCRIPTION	DATE	BY	CHECKED	APP
	SEE SHEET 1				

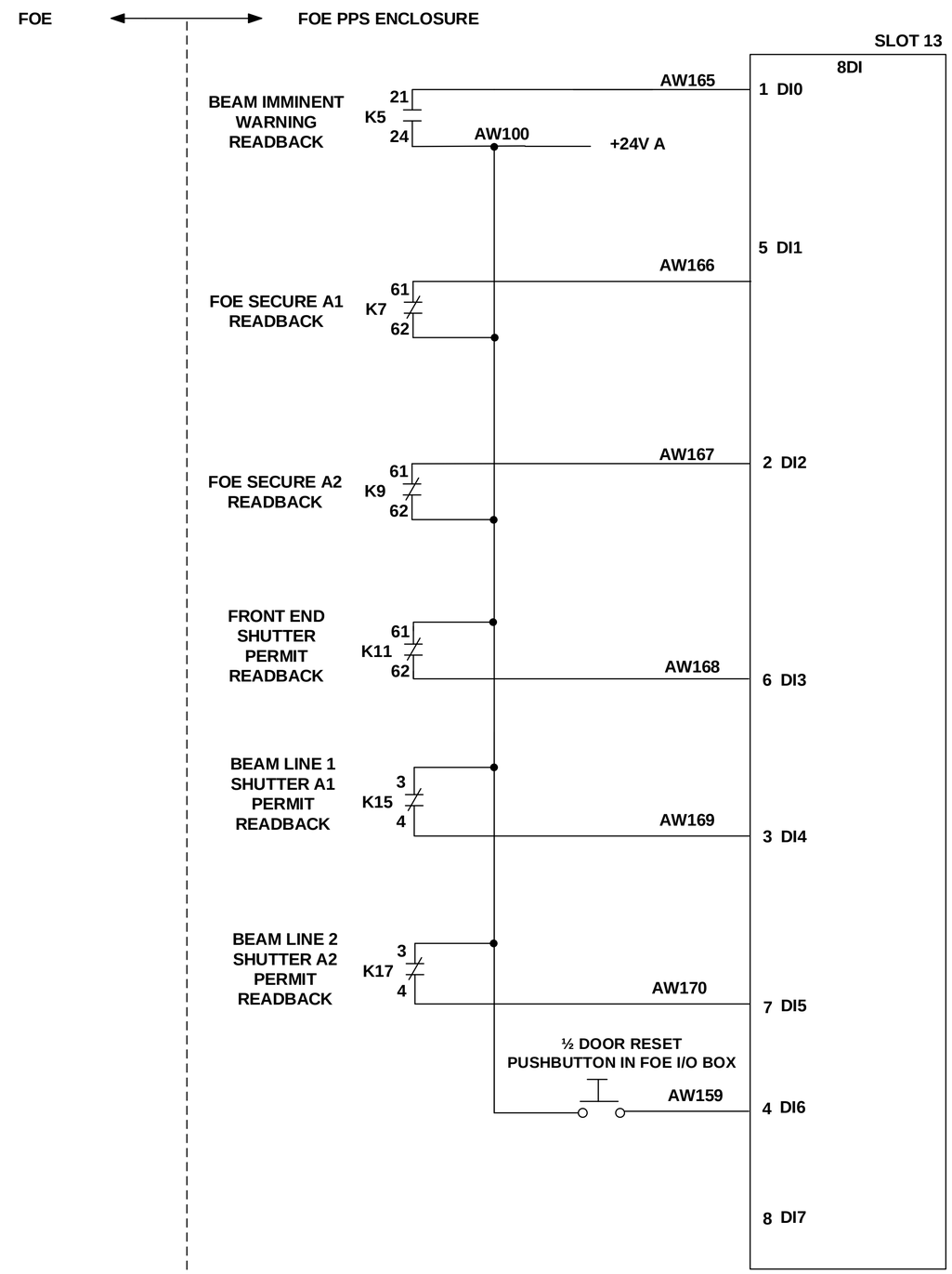

A

LT-EL-BL-EI (DRAWING DIRECTORY)	LT-EL-BL-EI-PPS-1280-91 (DRAWING NUMBER)	E (REV)
COMPUTER REPRODUCABLE	SCALE: N/A	SHEET 11 OF 46

LT-EL-BL-EI-PPS-1280-91

REV	DESCRIPTION	DATE	BY	CHECKED	APP
	SEE SHEET 1				

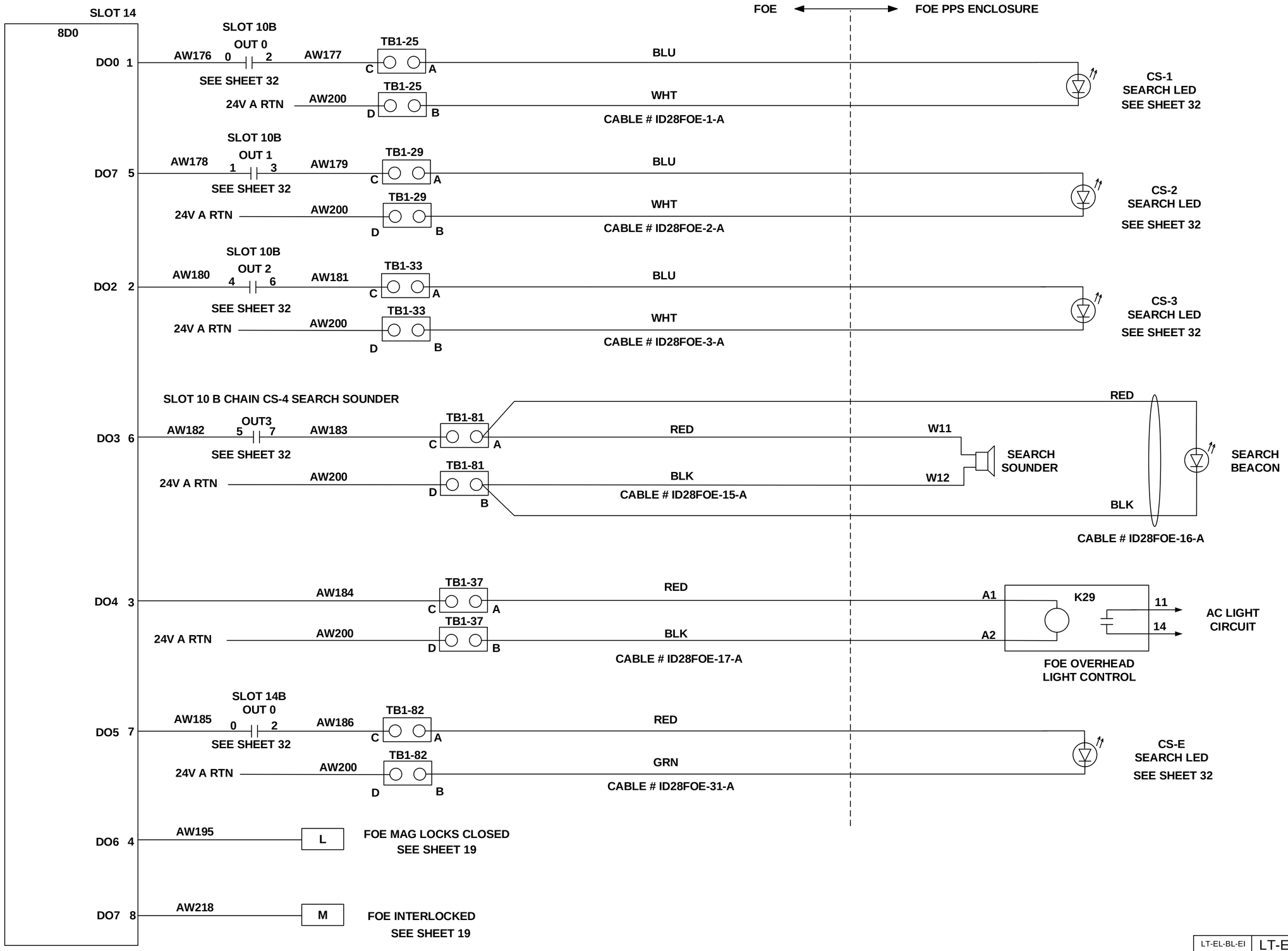

A

LT-EL-BL-EI	LT-EL-BL-EI-PPS-1280-91	E
DRAWING DIRECTORY	DRAWING NUMBER	REV

COMPUTER REPRODUCABLE | SCALE: N/A | SHEET 12 OF 46

LT-EL-BL-EI-PPS-1280-91

REV	DESCRIPTION	DATE	BY	CHECKED	APP
	SEE SHEET 1				

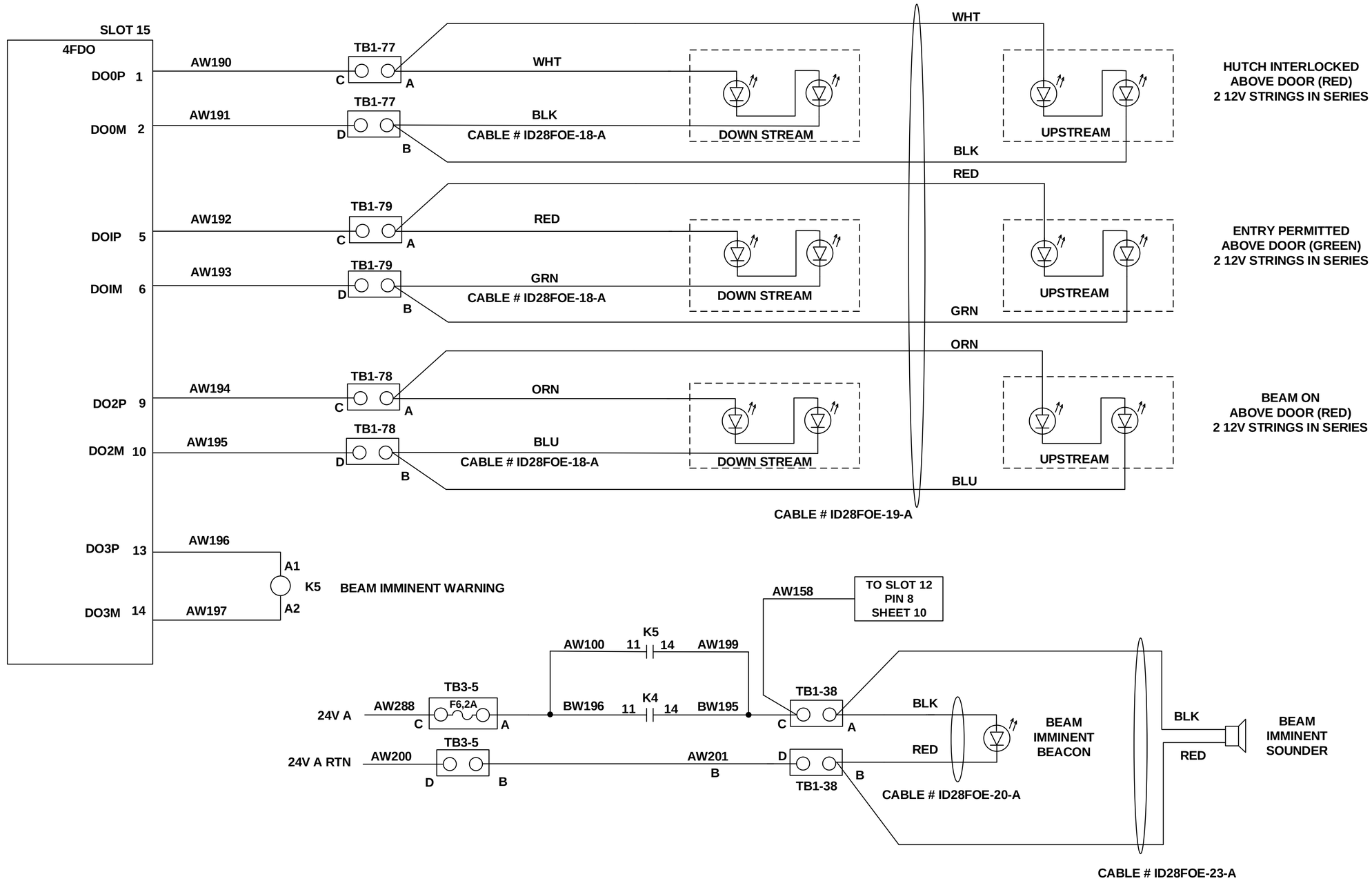

A

LT-EL-BL-EI (DRAWING DIRECTORY)	LT-EL-BL-EI-PPS-1280-91 (DRAWING NUMBER)	E (REV)
COMPUTER REPRODUCABLE	SCALE: N/A	SHEET 13 OF 46

LT-EL-BL-EI-PPS-1280-91

REV	DESCRIPTION	DATE	BY	CHECKED	APP
	SEE SHEET 1				

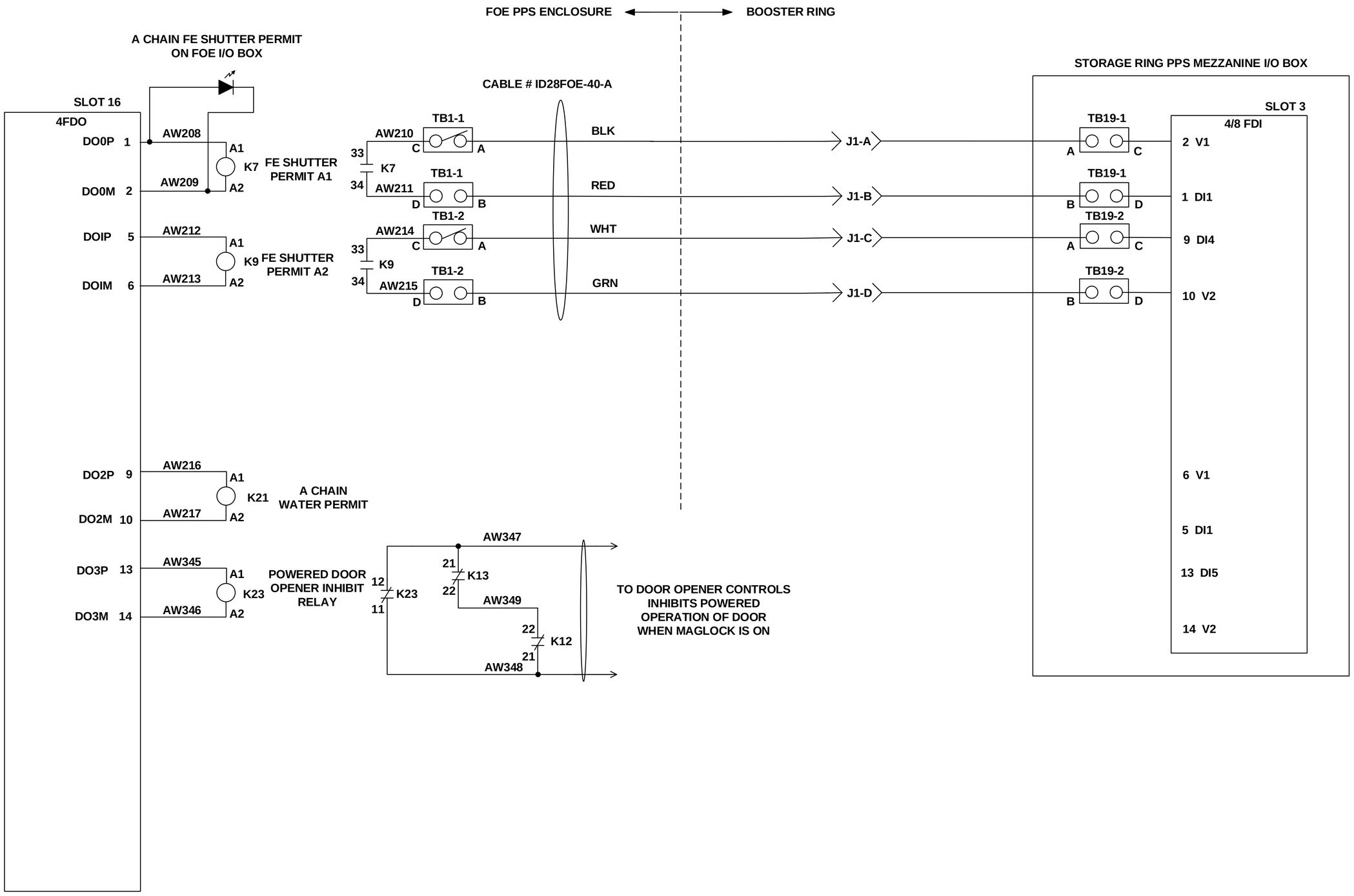

A

LT-EL-BL-EI	LT-EL-BL-EI-PPS-1280-91	E
DRAWING DIRECTORY	DRAWING NUMBER	REV

COMPUTER REPRODUCABLE | SCALE: N/A | SHEET 14 OF 46

LT-EL-BL-EI-PPS-1280-91

REV	DESCRIPTION	DATE	BY	CHECKED	APP
	SEE SHEET 1				

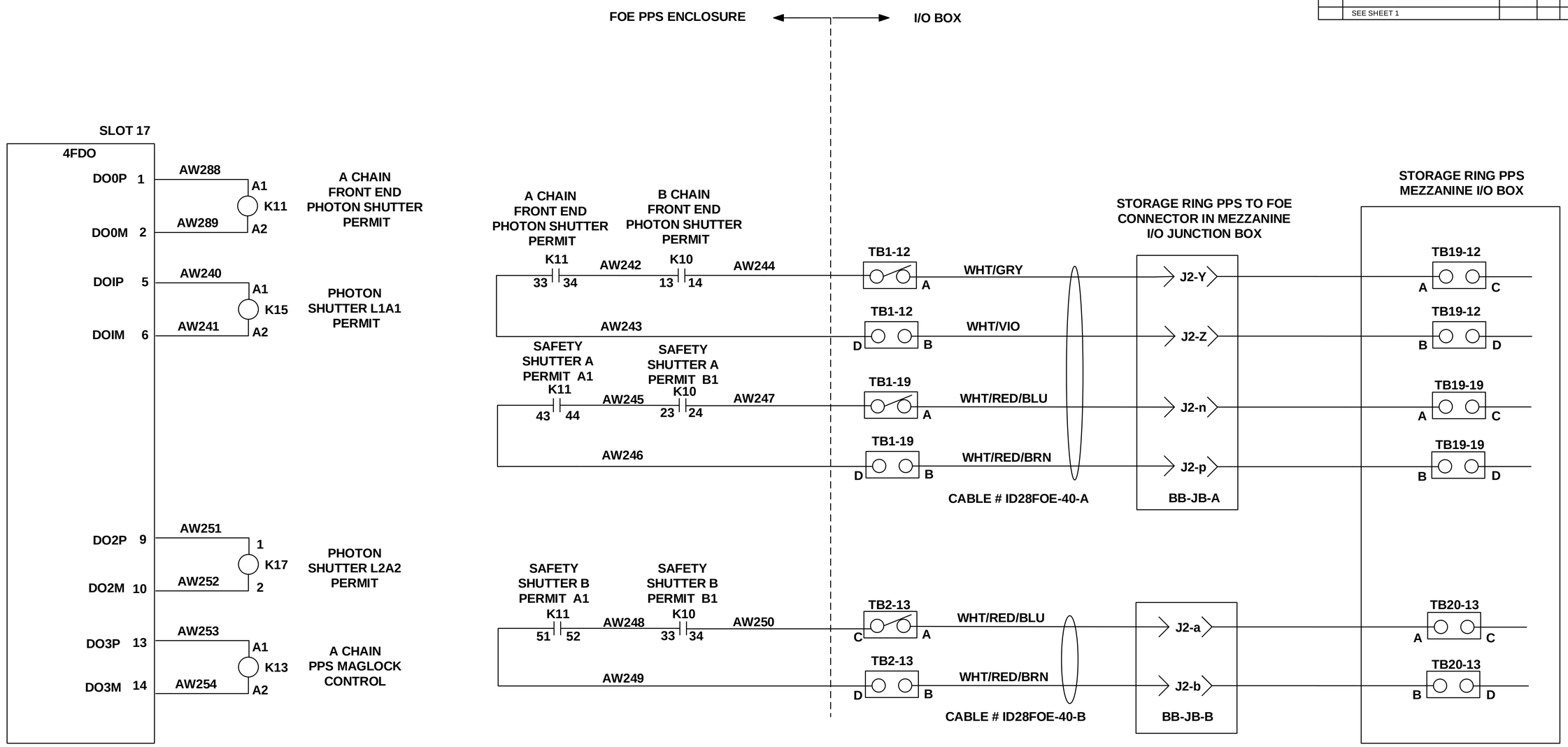

A

LT-EL-BL-EI (DRAWING DIRECTORY)	LT-EL-BL-EI-PPS-1280-91 (DRAWING NUMBER)	E (REV)
COMPUTER REPRODUCABLE	SCALE: N/A	SHEET 15 OF 46

LT-EL-BL-EI-PPS-1280-91

REV	DESCRIPTION	DATE	BY	CHECKED	APP
	SEE SHEET 1				

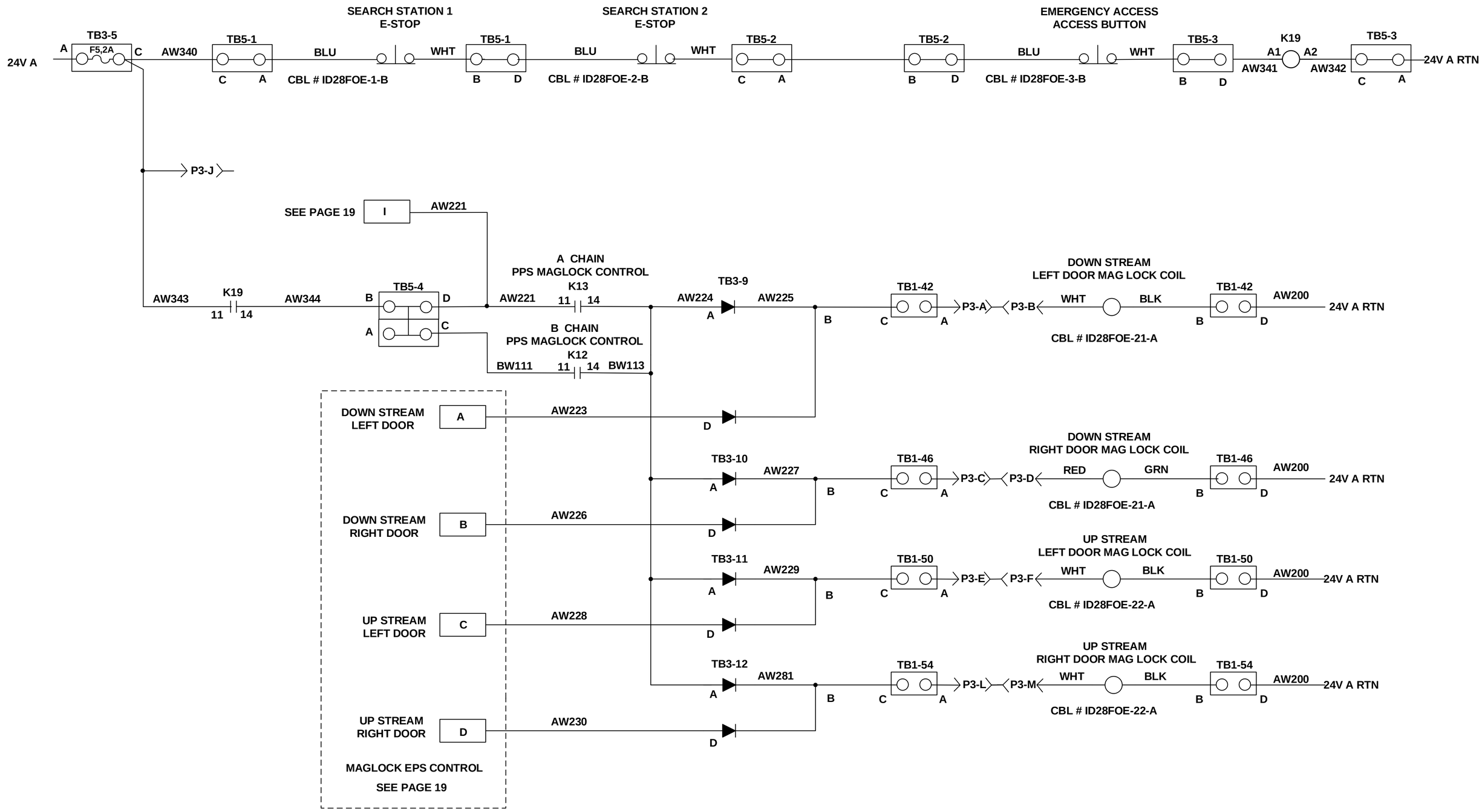

A

LT-EL-BL-EI (DRAWING DIRECTORY)	LT-EL-BL-EI-PPS-1280-91 (DRAWING NUMBER)	E (REV)
COMPUTER REPRODUCABLE	SCALE: N/A	SHEET 16 OF 46

LT-EL-BL-EI-PPS-1280-91

REV	DESCRIPTION	DATE	BY	CHECKED	APP
	SEE SHEET 1				

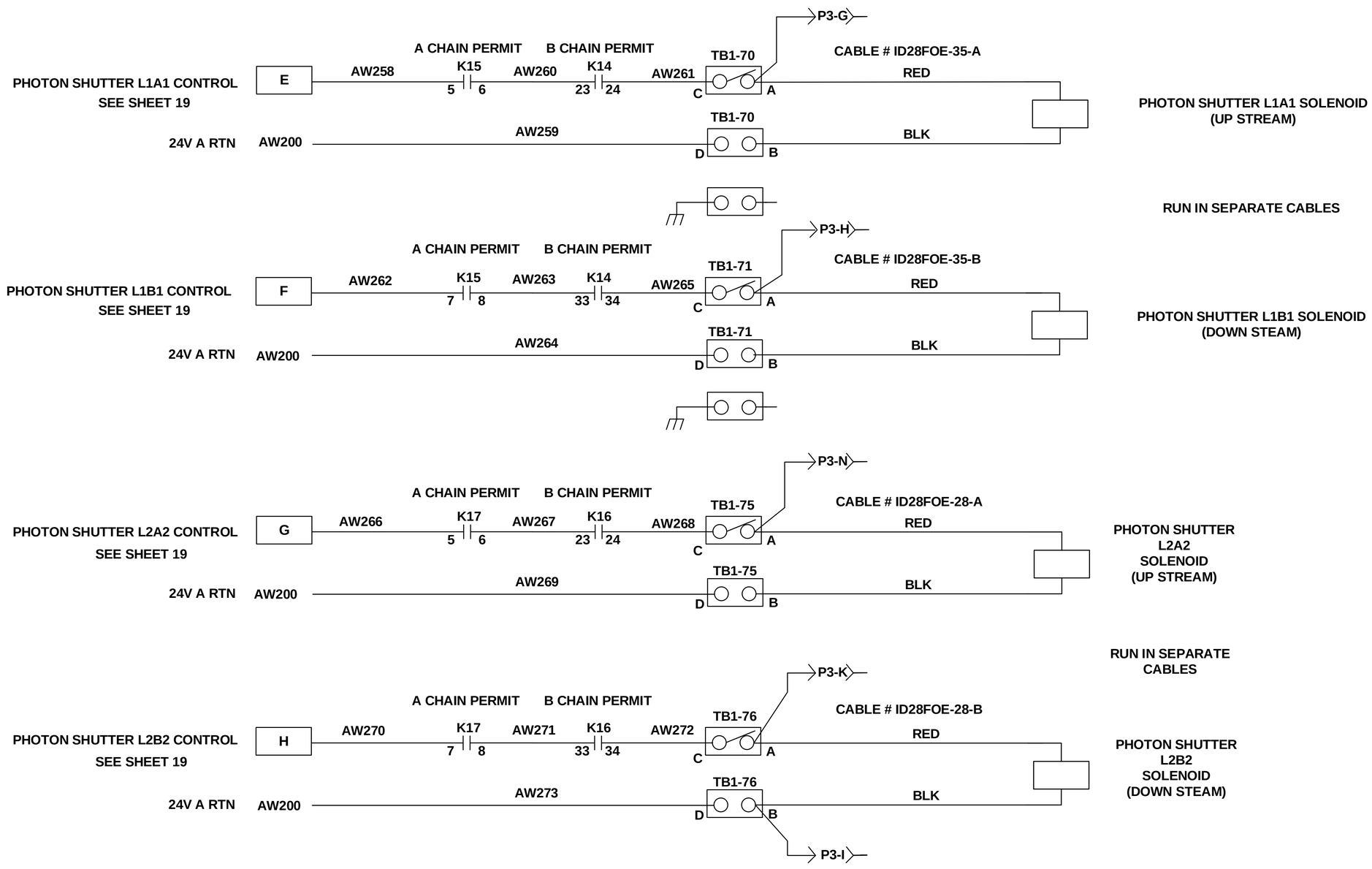

A

LT-EL-BL-EI DRAWING DIRECTORY	LT-EL-BL-EI-PPS-1280-91 DRAWING NUMBER	E REV.
COMPUTER REPRODUCABLE	SCALE: N/A	SHEET 17 OF 46

LT-EL-BL-EI-PPS-1280-91

REV	DESCRIPTION	DATE	BY	CHECKED	APP
	SEE SHEET 1				

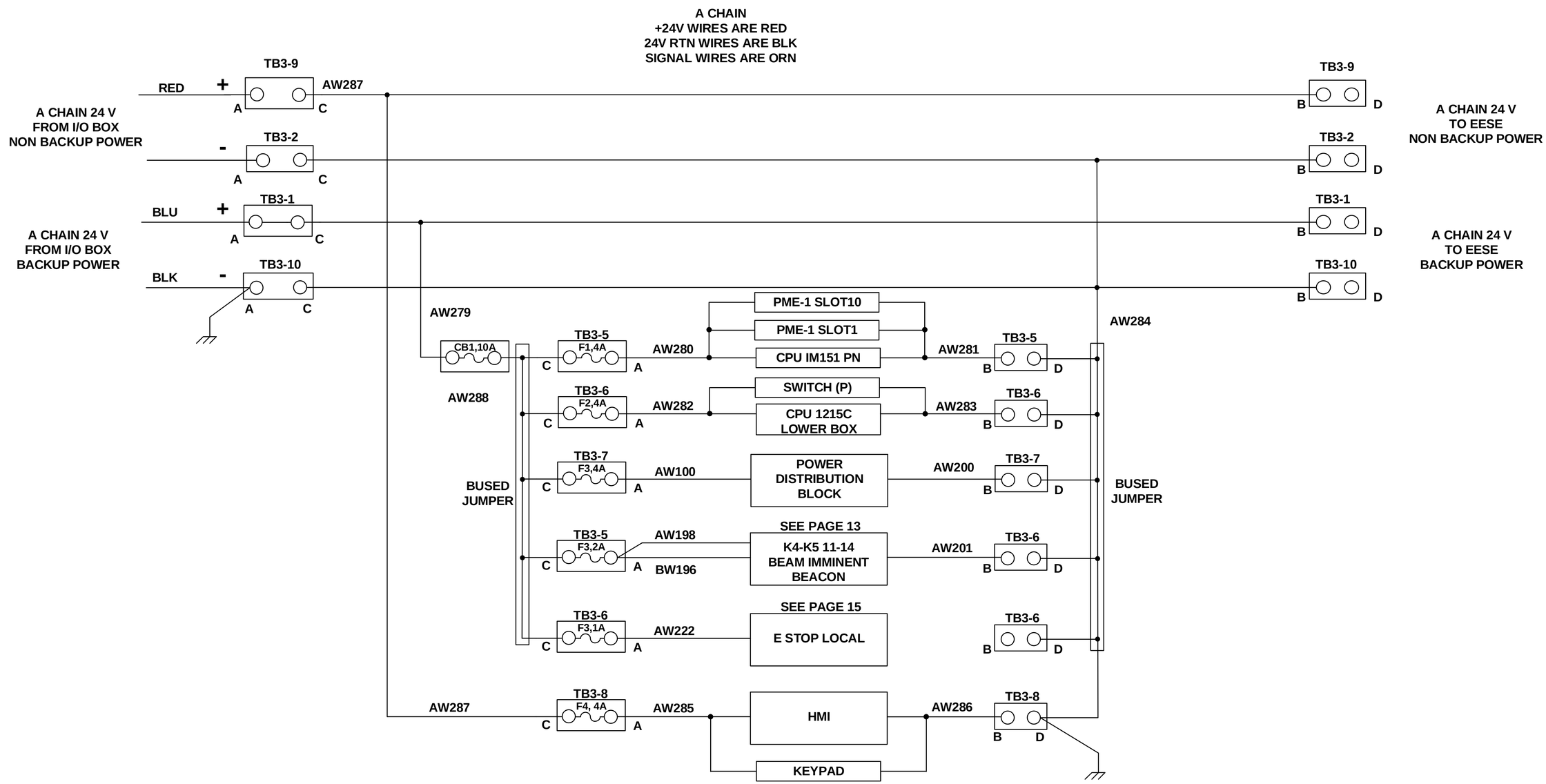

A

LT-EL-BL-EI (DRAWING DIRECTORY)	LT-EL-BL-EI-PPS-1280-91 (DRAWING NUMBER)	E (REV)
COMPUTER REPRODUCABLE	SCALE: N/A	SHEET 18 OF 46

LT-EL-BL-EI-PPS-1280-91

REV	DESCRIPTION	DATE	BY	CHECKED	APP
	SEE SHEET 1				

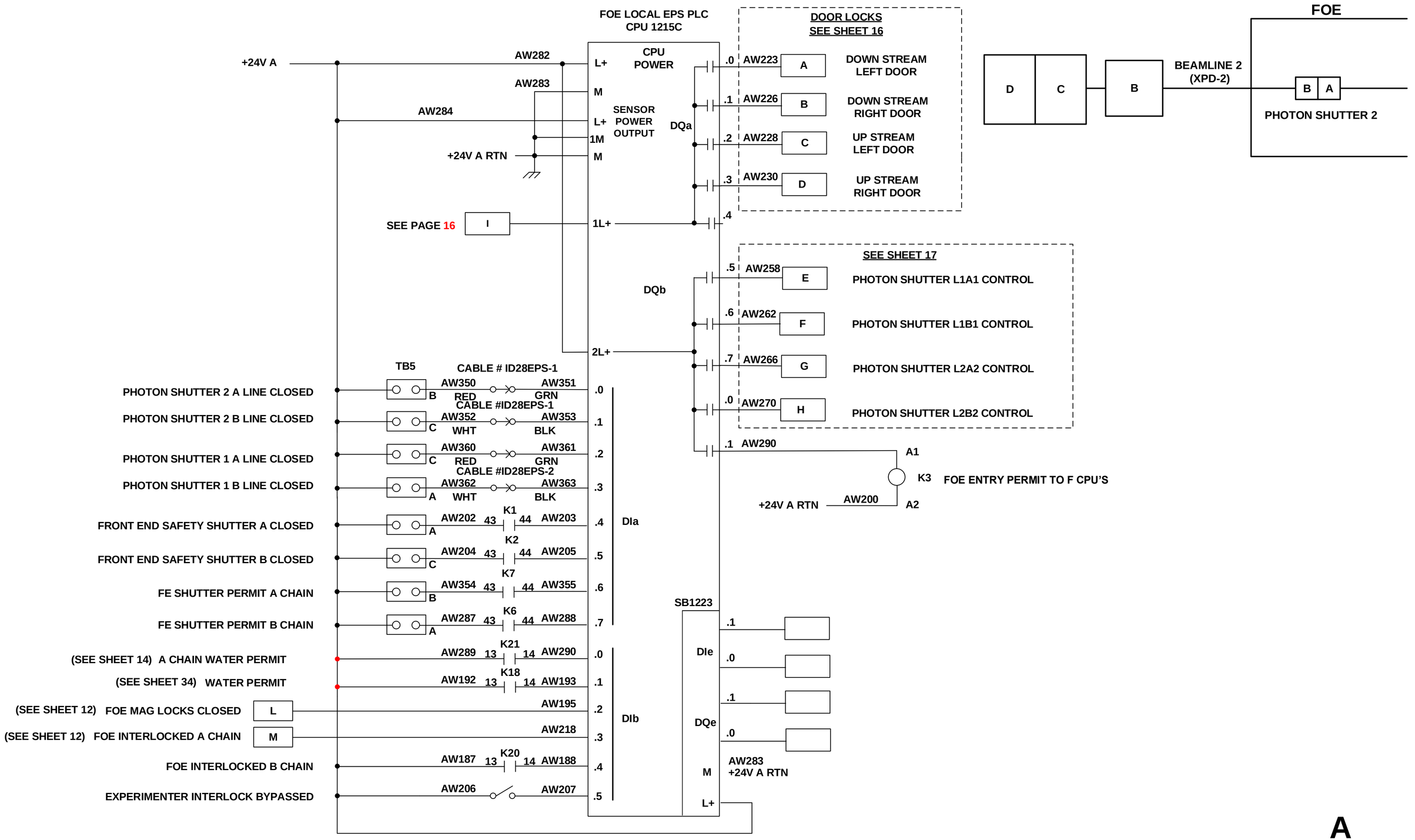

A

LT-EL-BL-EI (DRAWING DIRECTORY)	LT-EL-BL-EI-PPS-1280-91 (DRAWING NUMBER)	E (REV)
COMPUTER REPRODUCABLE	SCALE: N/A	SHEET 19 OF 46

LT-EL-BL-EI-PPS-1280-91

REV	DESCRIPTION	DATE	BY	CHECKED	APP
	SEE SHEET 1				

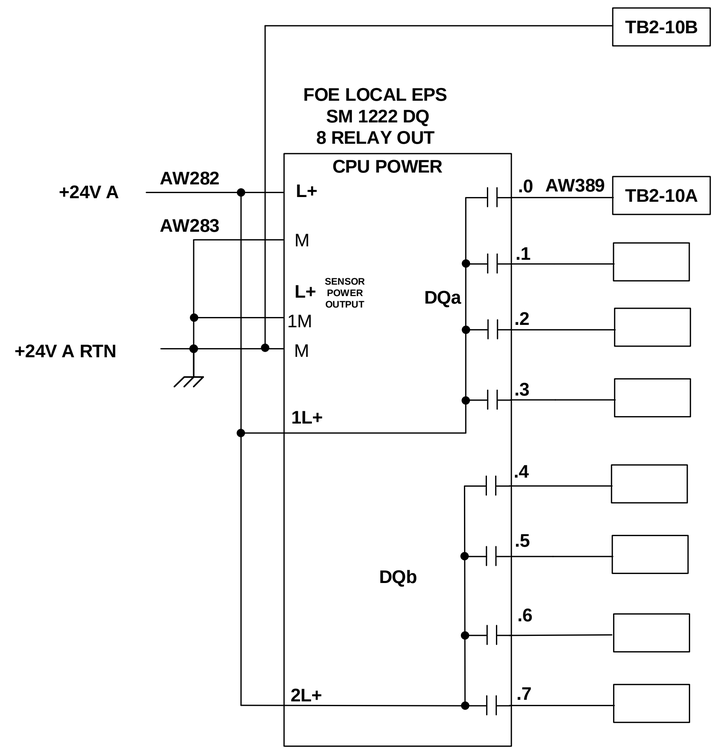

OPEN FE PHOTON AND SAFETY SHUTTERS TO EPS ON MEZZNINE

A

LT-EL-BL-EI (DRAWING DIRECTORY)	LT-EL-BL-EI-PPS-1280-91 (DRAWING NUMBER)	E (REV)
COMPUTER REPRODUCABLE	SCALE: N/A	SHEET 20 OF 46

LT-EL-BL-EI-PPS-1280-91

REV	DESCRIPTION	DATE	BY	CHECKED	APP
	SEE SHEET 1				

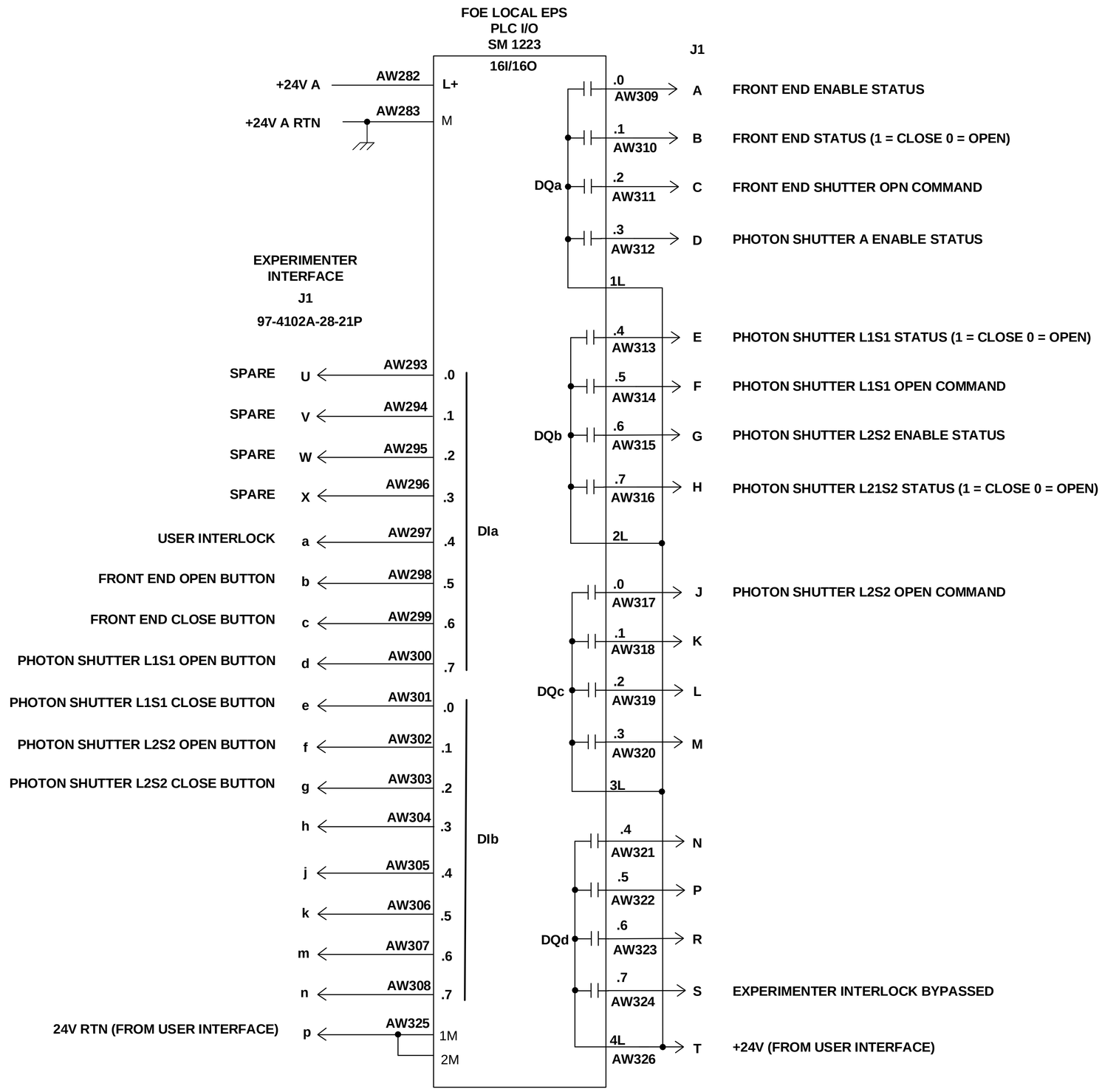

A

LT-EL-BL-EI (DRAWING DIRECTORY)	LT-EL-BL-EI-PPS-1280-91 (DRAWING NUMBER)	E (REV)
COMPUTER REPRODUCABLE	SCALE: N/A	SHEET 21 OF 46

LT-EL-BL-EI-PPS-1280-91

REV	DESCRIPTION	DATE	BY	CHECKED	APP
	SEE SHEET 1				

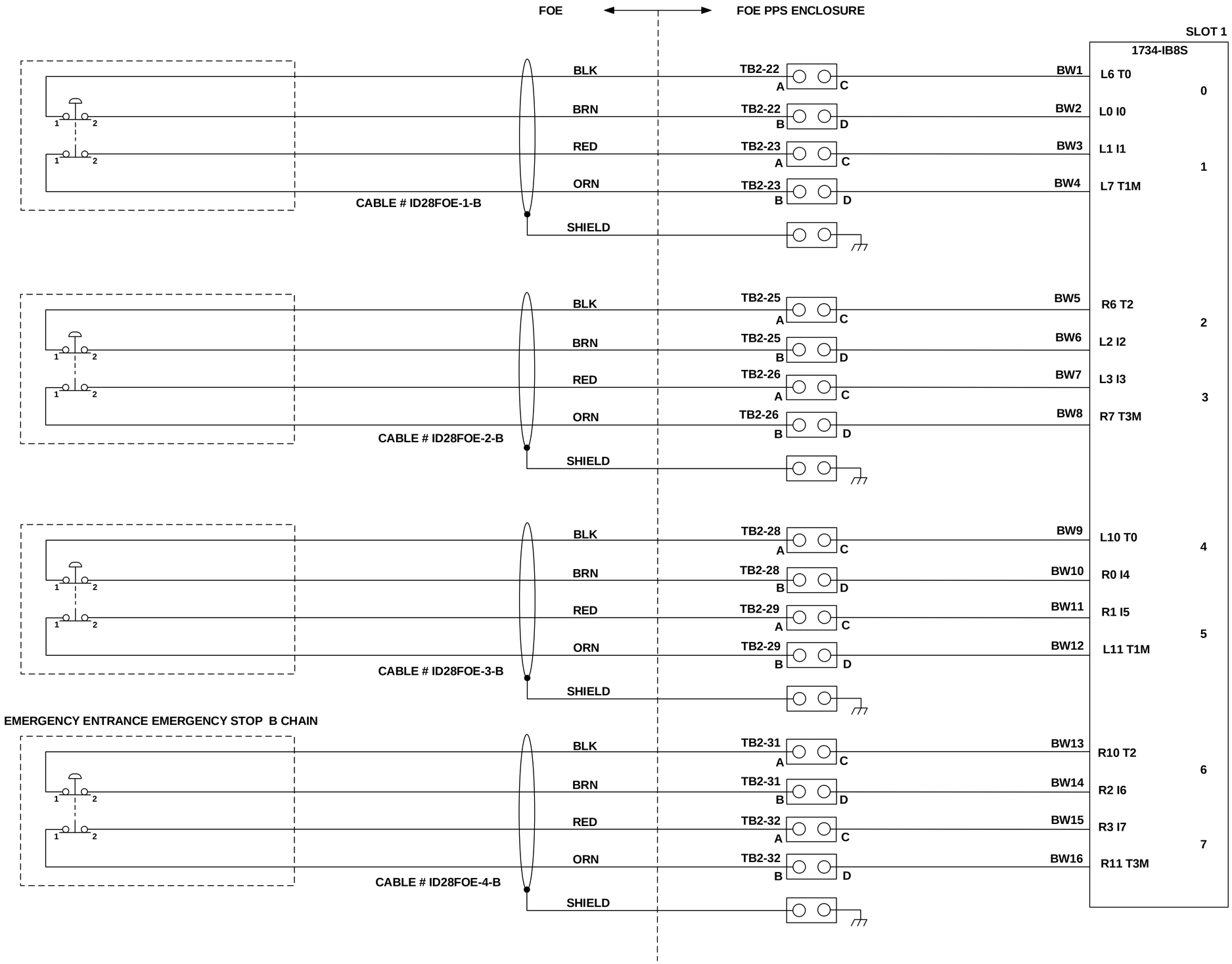

B

LT-EL-BL-EI	LT-EL-BL-EI-PPS-1280-91	E
DRAWING DIRECTORY	DRAWING NUMBER	REV
COMPUTER REPRODUCABLE	SCALE: N/A	SHEET 22 OF 46

LT-EL-BL-EI-PPS-1280-91

REV	DESCRIPTION	DATE	BY	CHECKED	APP
	SEE SHEET 1				

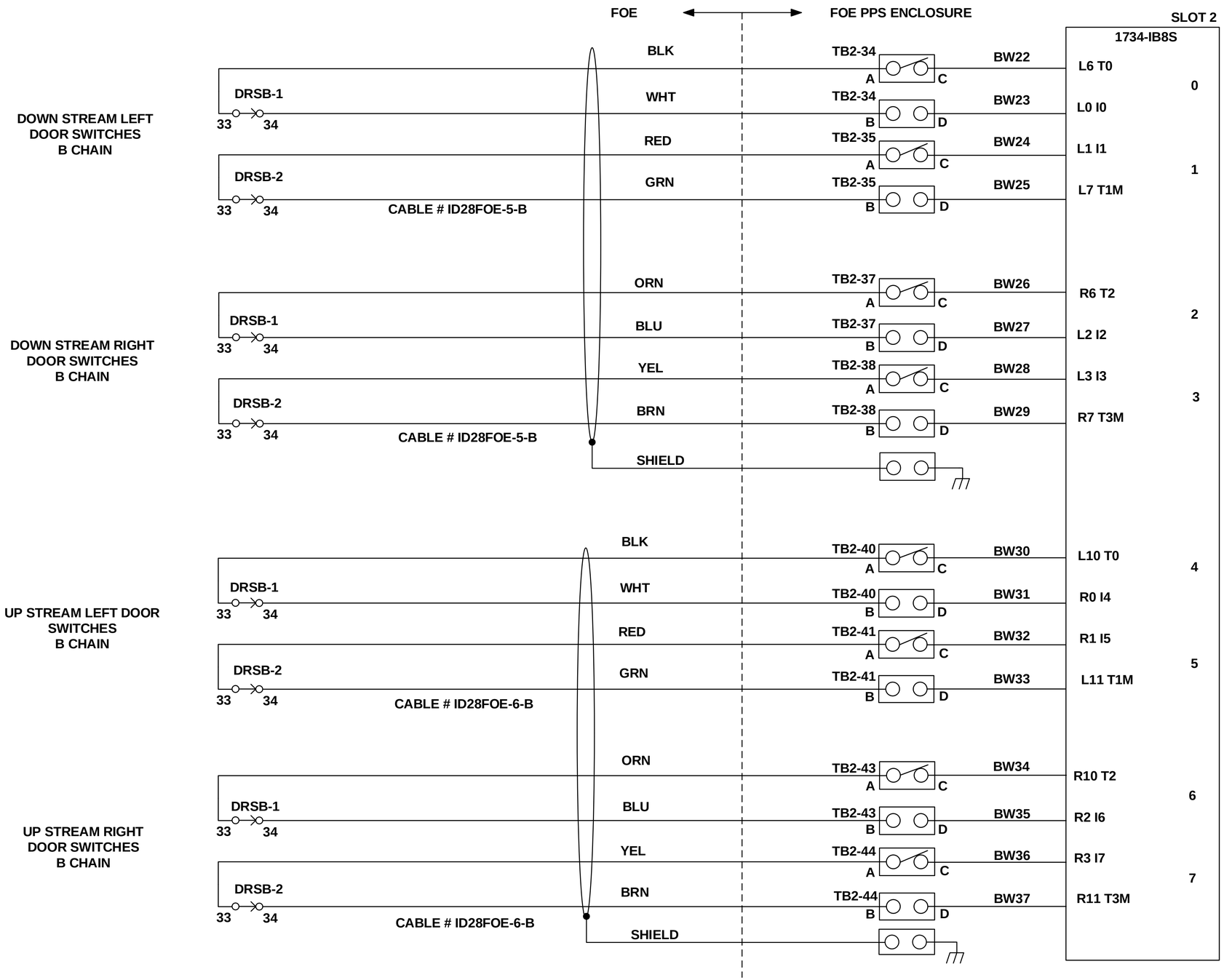

B

LT-EL-BL-EI (DRAWING DIRECTORY)	LT-EL-BL-EI-PPS-1280-91 (DRAWING NUMBER)	E (REV)
COMPUTER REPRODUCABLE	SCALE: N/A	SHEET 23 OF 46

LT-EL-BL-EI-PPS-1280-91

REV	DESCRIPTION	DATE	BY	CHECKED	APP
	SEE SHEET 1				

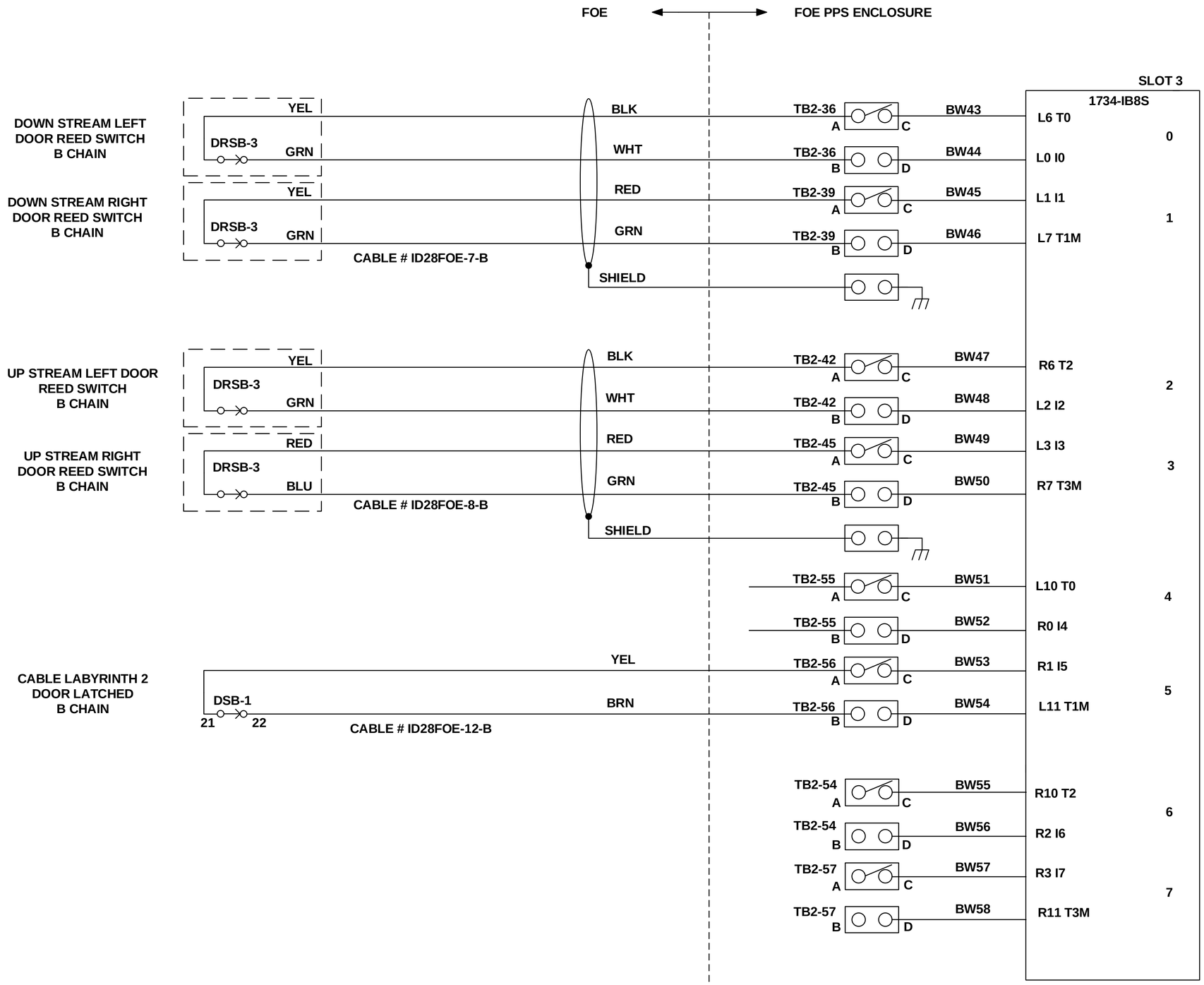

B

LT-EL-BL-EI (DRAWING DIRECTORY)	LT-EL-BL-EI-PPS-1280-91 (DRAWING NUMBER)	E (REV)
COMPUTER REPRODUCABLE	SCALE: N/A	SHEET 24 OF 46

LT-EL-BL-EI-PPS-1280-91

REV	DESCRIPTION	DATE	BY	CHECKED	APP
	SEE SHEET 1				

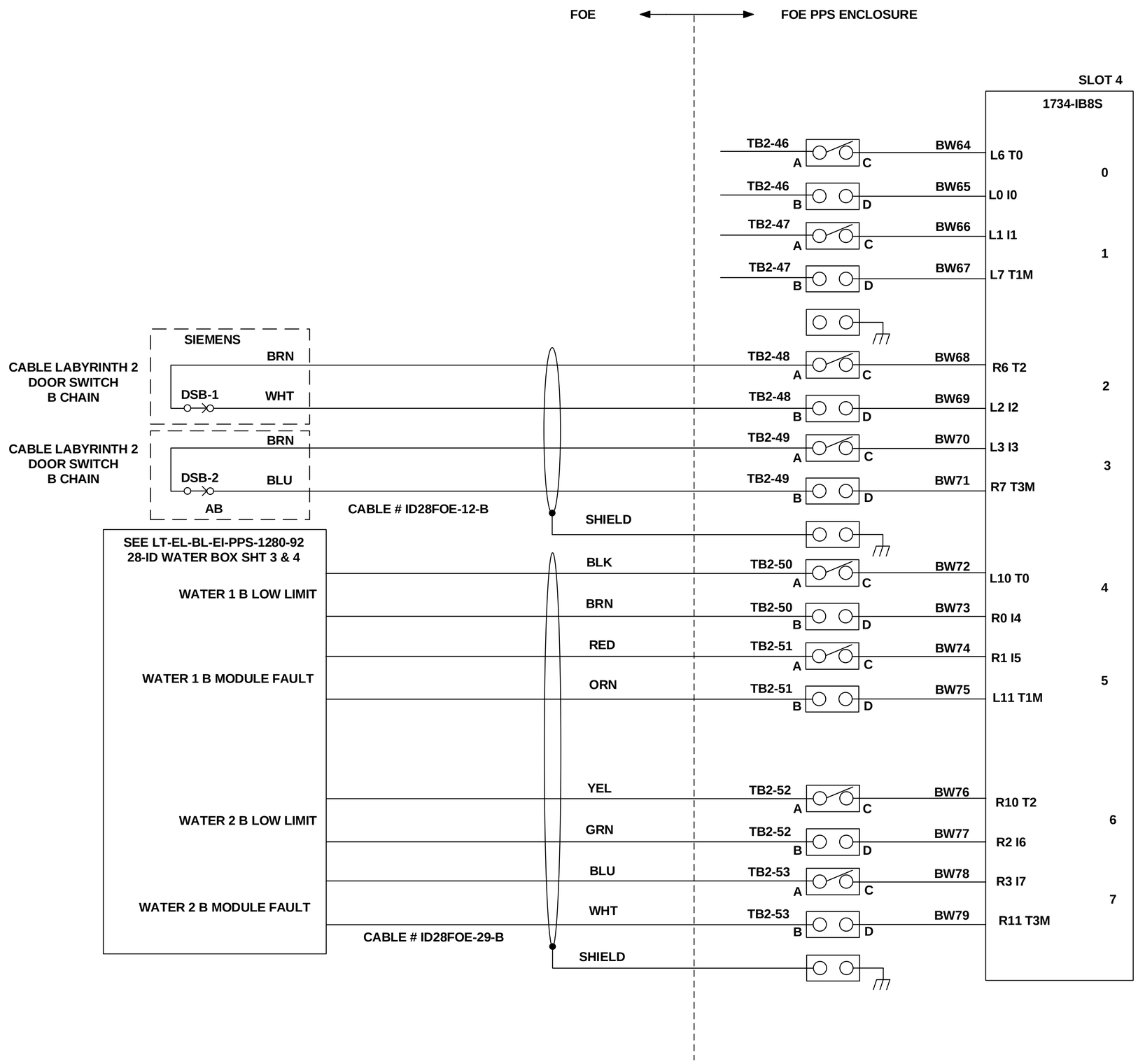

B

LT-EL-BL-EI (DRAWING DIRECTORY)	LT-EL-BL-EI-PPS-1280-91 (DRAWING NUMBER)	E (REV)
COMPUTER REPRODUCABLE	SCALE: N/A	SHEET 25 OF 46

LT-EL-BL-EI-PPS-1280-91

REV	DESCRIPTION	DATE	BY	CHECKED	APP
	SEE SHEET 1				

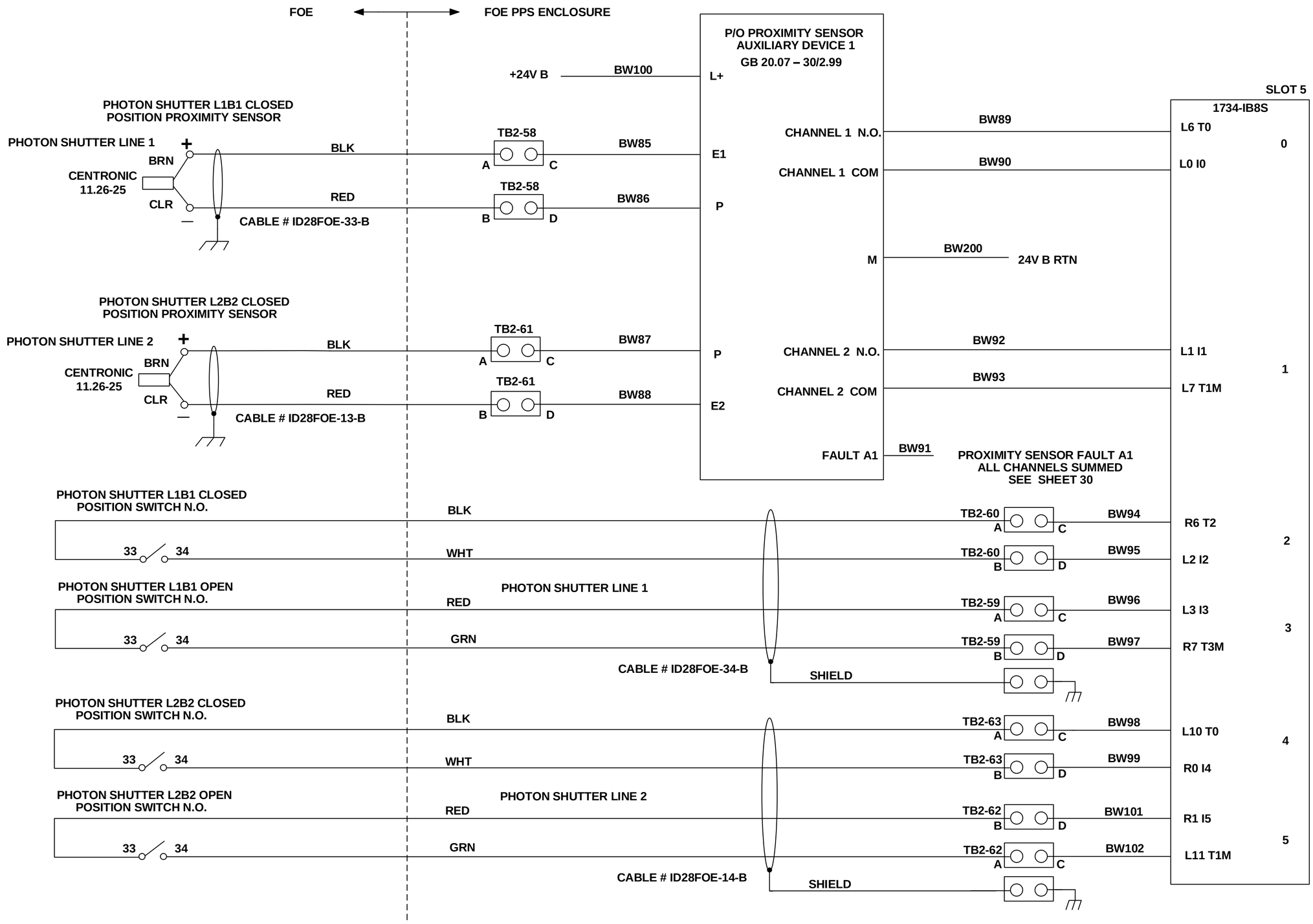

B

LT-EL-BL-EI	LT-EL-BL-EI-PPS-1280-91	E
DRAWING DIRECTORY	DRAWING NUMBER	REV

COMPUTER REPRODUCABLE | SCALE: N/A | SHEET 26 OF 46

LT-EL-BL-EI-PPS-1280-91

REV	DESCRIPTION	DATE	BY	CHECKED	APP
	SEE SHEET 1				

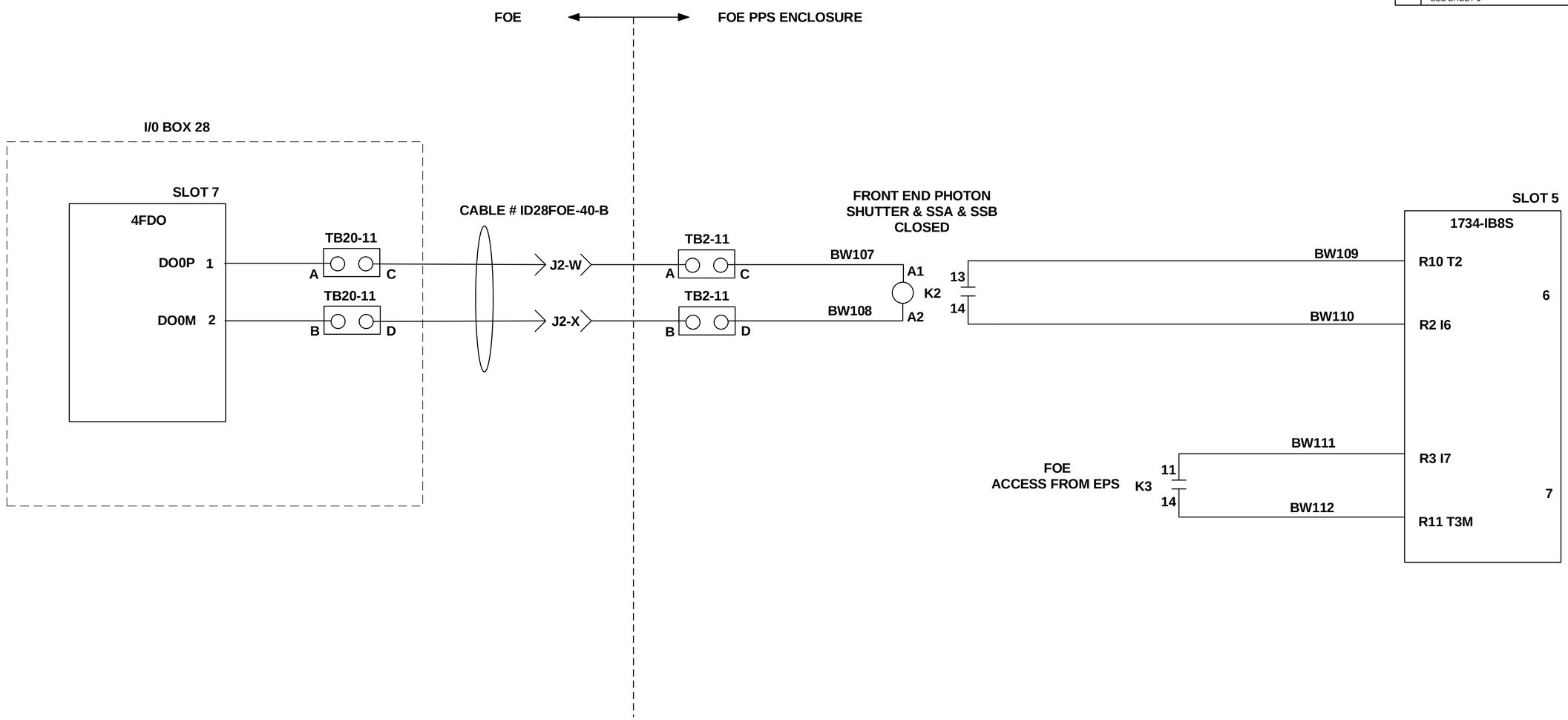

B

LT-EL-BL-EI	LT-EL-BL-EI-PPS-1280-91	E
DRAWING DIRECTORY	DRAWING NUMBER	REV

COMPUTER REPRODUCABLE | SCALE: N/A | SHEET 27 OF 46

LT-EL-BL-EI-PPS-1280-91

REV	DESCRIPTION	DATE	BY	CHECKED	APP
	SEE SHEET 1				

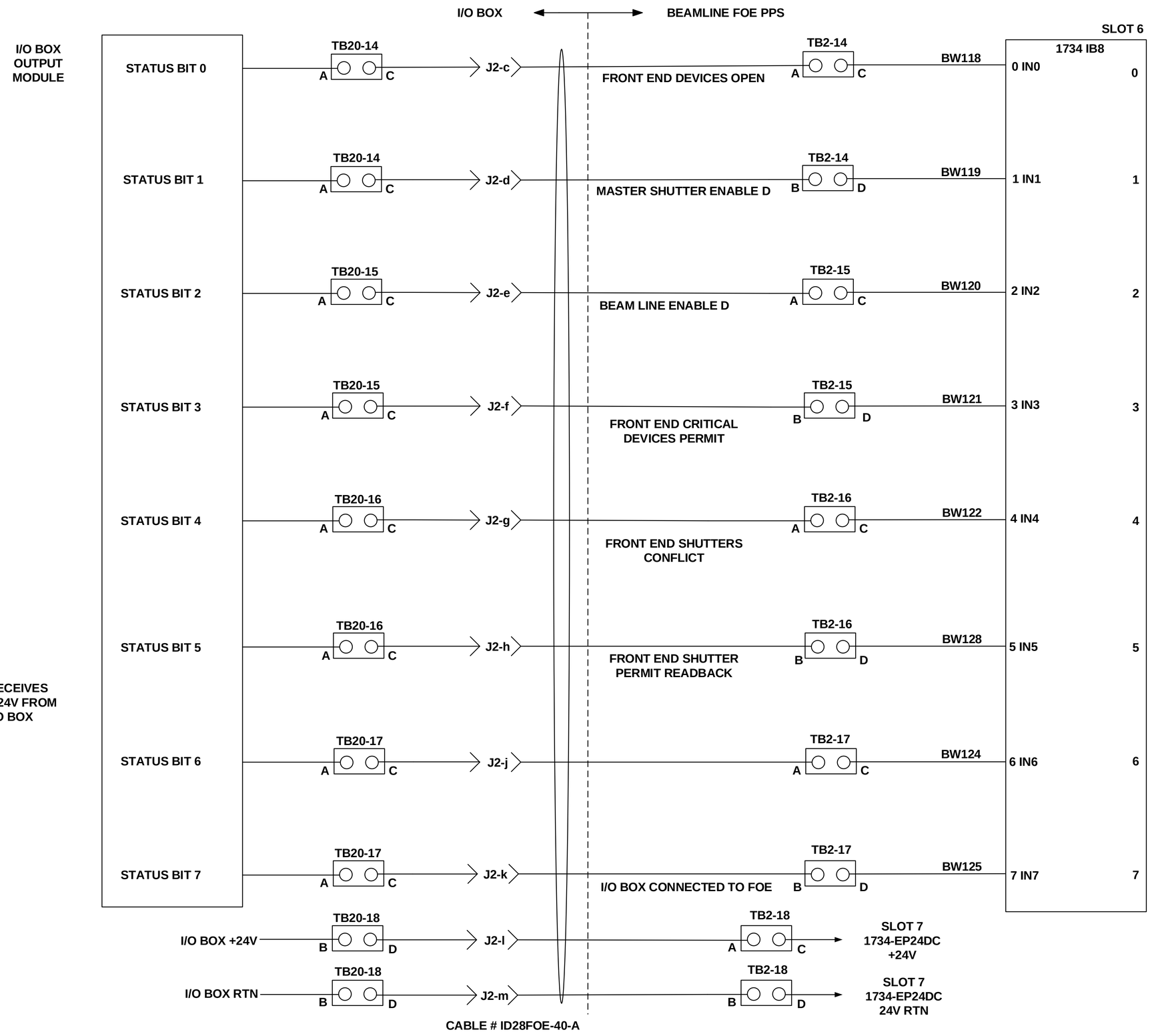

B

LT-EL-BL-EI (DRAWING DIRECTORY)	LT-EL-BL-EI-PPS-1280-91 (DRAWING NUMBER)	E (REV)
COMPUTER REPRODUCABLE	SCALE: N/A	SHEET 28 OF 46

LT-EL-BL-EI-PPS-1280-91

REV	DESCRIPTION	DATE	BY	CHECKED	APP
	SEE SHEET 1				

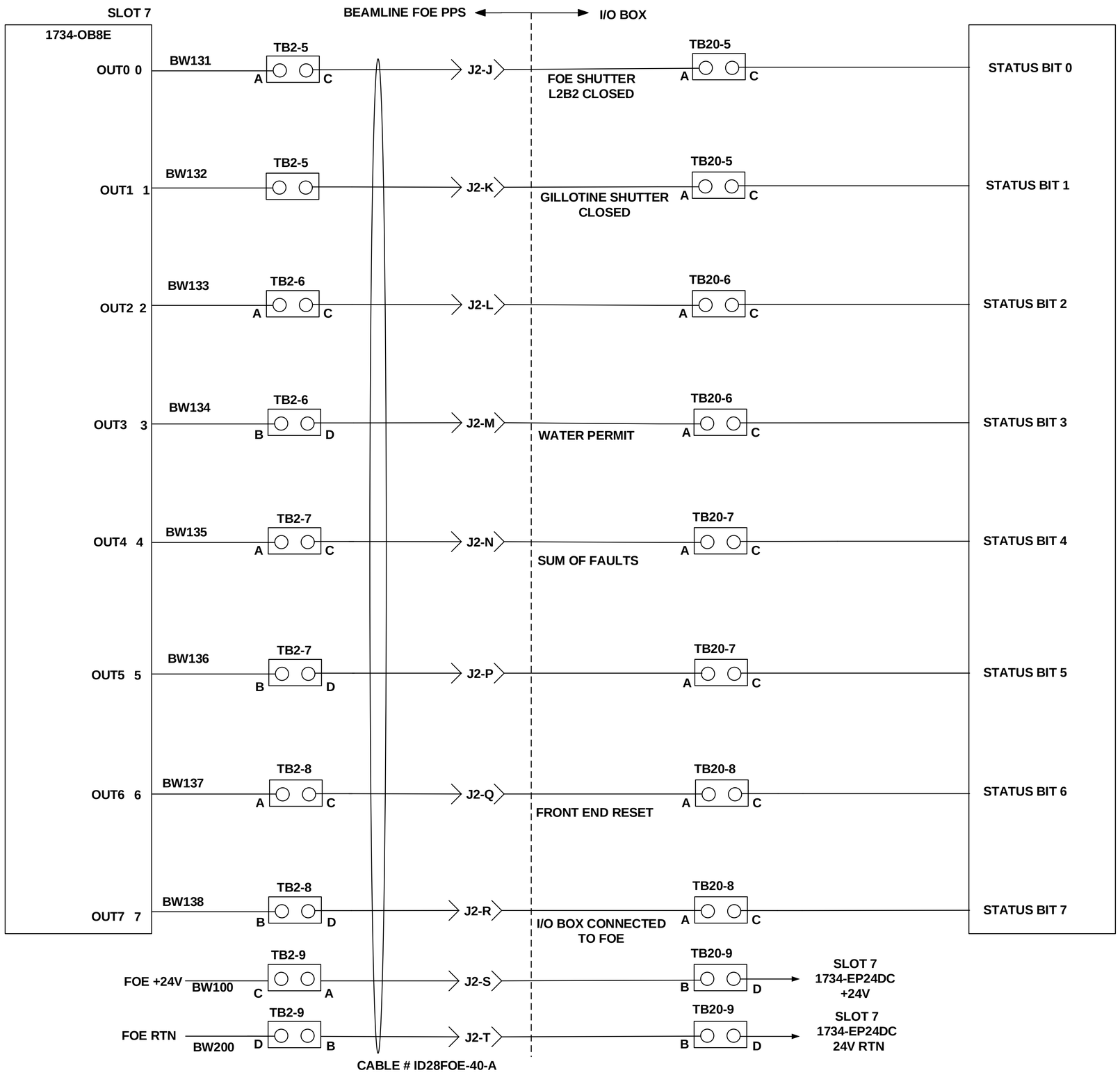

B

LT-EL-BL-EI (DRAWING DIRECTORY)	LT-EL-BL-EI-PPS-1280-91 (DRAWING NUMBER)	E (REV)
COMPUTER REPRODUCABLE	SCALE: N/A	SHEET 29 OF 46

LT-EL-BL-EI-PPS-1280-91

REV	DESCRIPTION	DATE	BY	CHECKED	APP
	SEE SHEET 1				

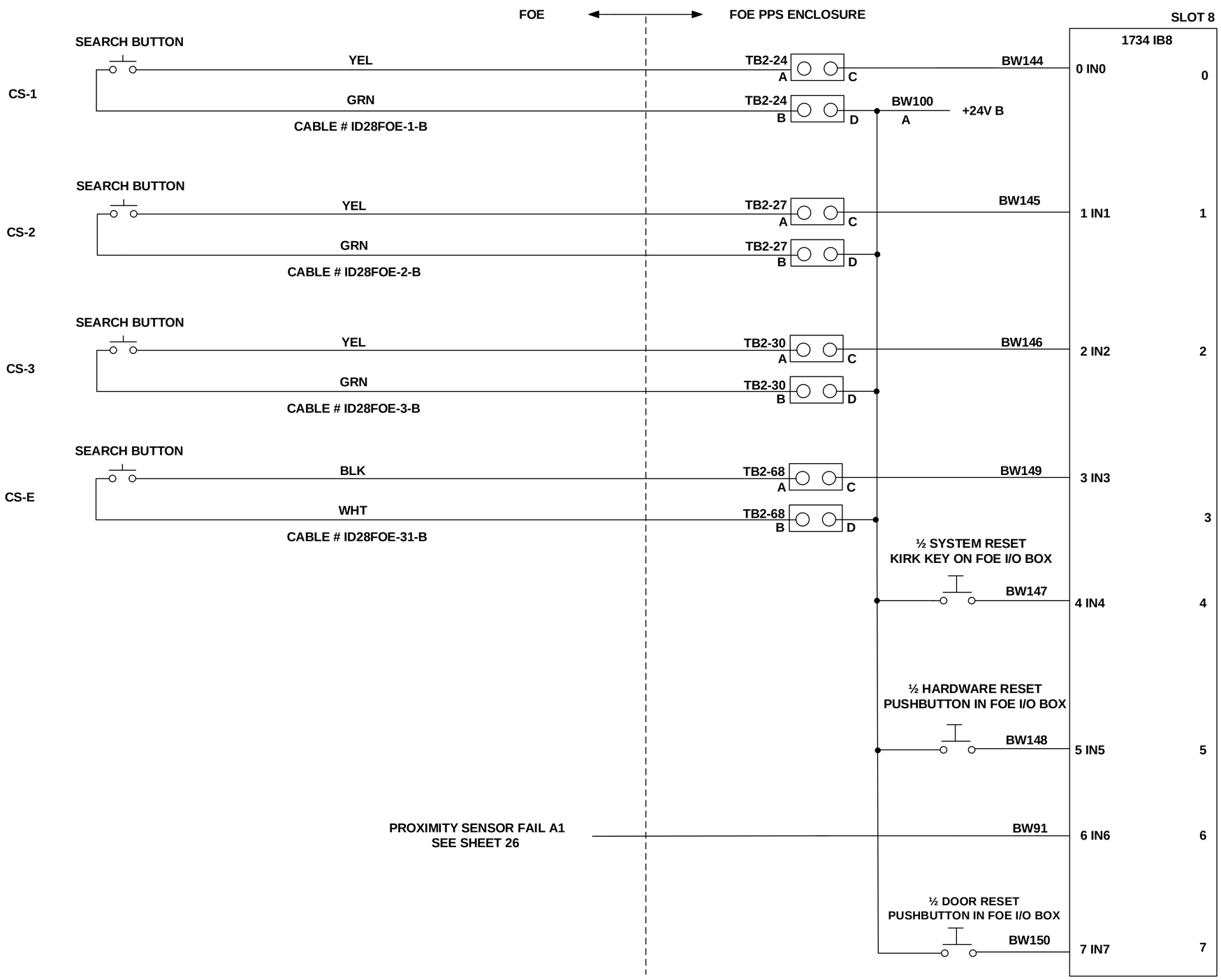

B

LT-EL-BL-EI (DRAWING DIRECTORY)	LT-EL-BL-EI-PPS-1280-91 (DRAWING NUMBER)	E (REV)
COMPUTER REPRODUCABLE	SCALE: N/A	SHEET 30 OF 46

LT-EL-BL-EI-PPS-1280-91

REV	DESCRIPTION	DATE	BY	CHECKED	APP
	SEE SHEET 1				

FOE ⟷ FOE PPS ENCLOSURE

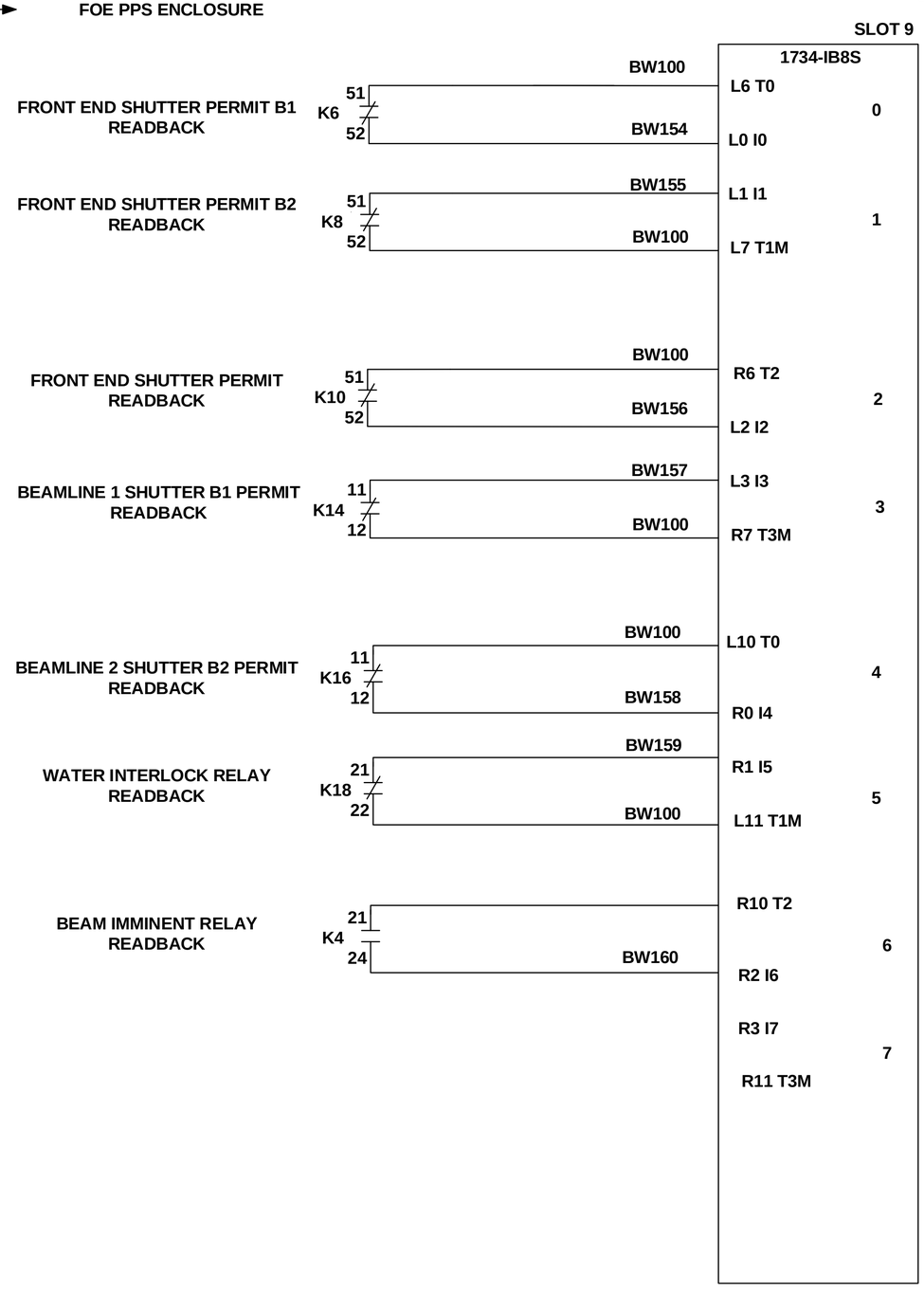

B

LT-EL-BL-EI DRAWING DIRECTORY	LT-EL-BL-EI-PPS-1280-91 DRAWING NUMBER	E REV
COMPUTER REPRODUCABLE	SCALE: N/A	SHEET 31 OF 46

LT-EL-BL-EI-PPS-1280-91

REV	DESCRIPTION	DATE	BY	CHECKED	APP
	SEE SHEET 1				

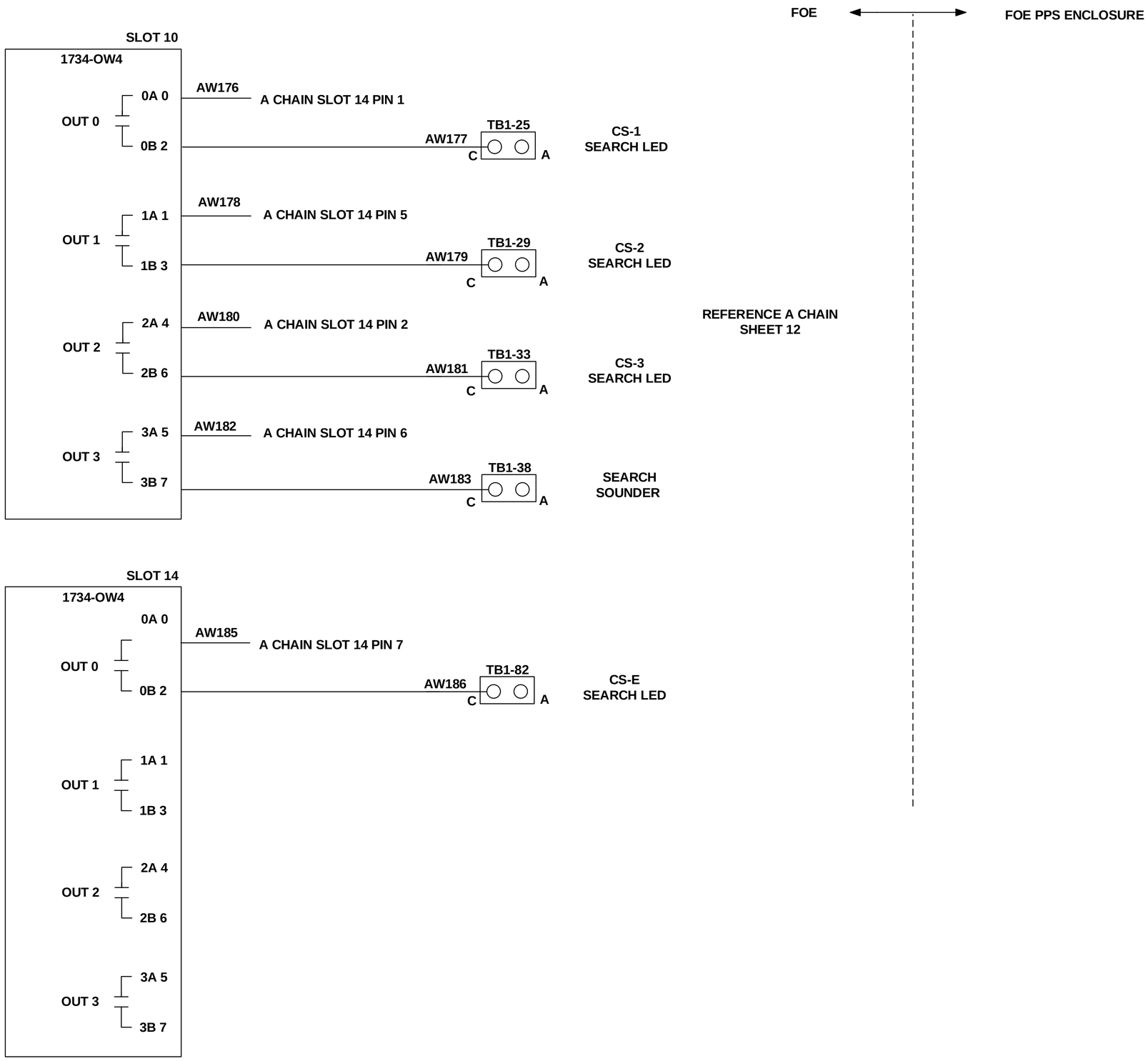

B

LT-EL-BL-EI (DRAWING DIRECTORY)	LT-EL-BL-EI-PPS-1280-91 (DRAWING NUMBER)	E (REV)
COMPUTER REPRODUCABLE	SCALE: N/A	SHEET 32 OF 46

LT-EL-BL-EI-PPS-1280-91

REV	DESCRIPTION	DATE	BY	CHECKED	APP
	SEE SHEET 1				

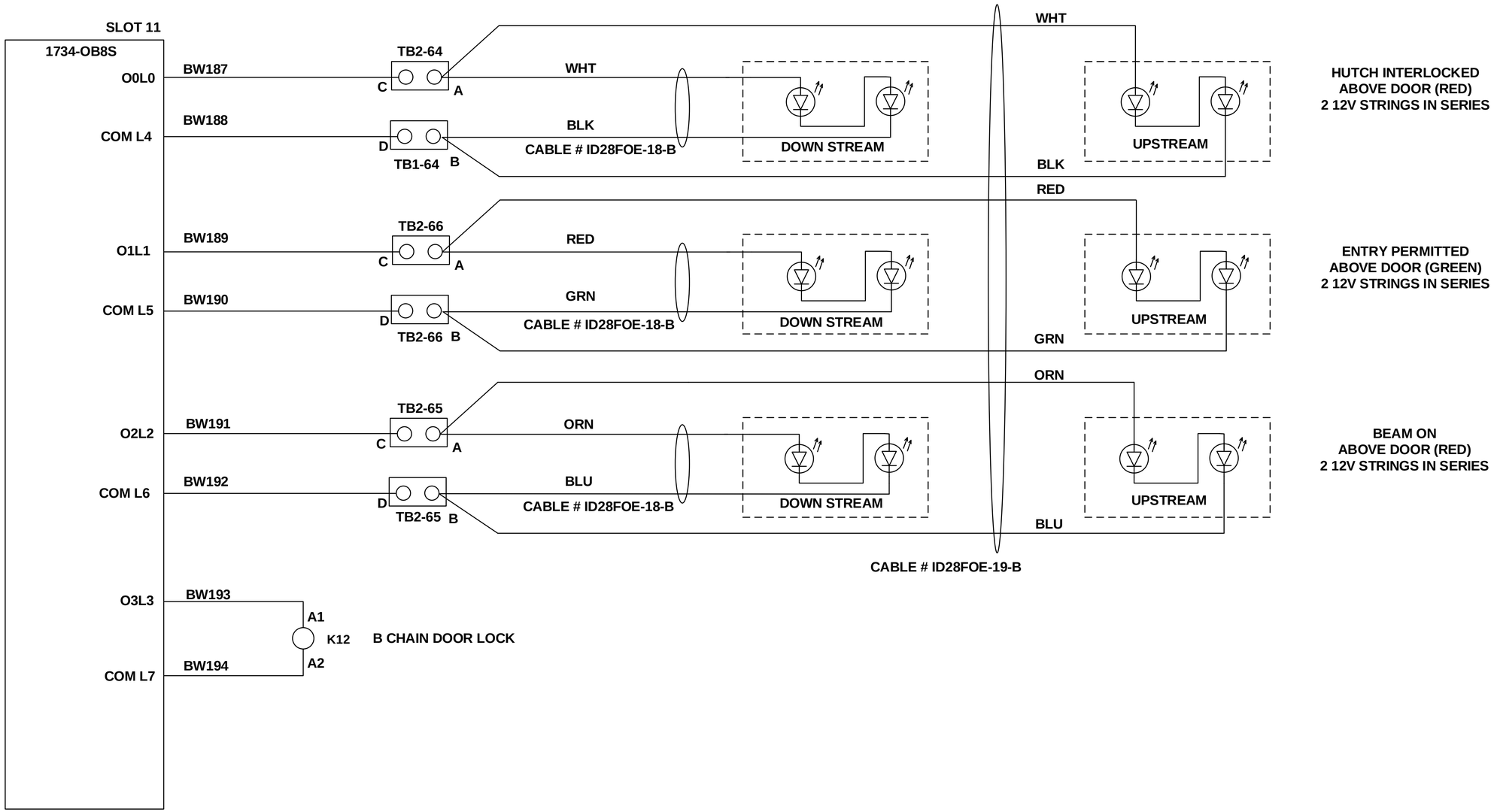

B

LT-EL-BL-EI (DRAWING DIRECTORY)	LT-EL-BL-EI-PPS-1280-91 (DRAWING NUMBER)	E (REV)
COMPUTER REPRODUCABLE	SCALE: N/A	SHEET 33 OF 46

LT-EL-BL-EI-PPS-1280-91

REV	DESCRIPTION	DATE	BY	CHECKED	APP
	SEE SHEET 1				

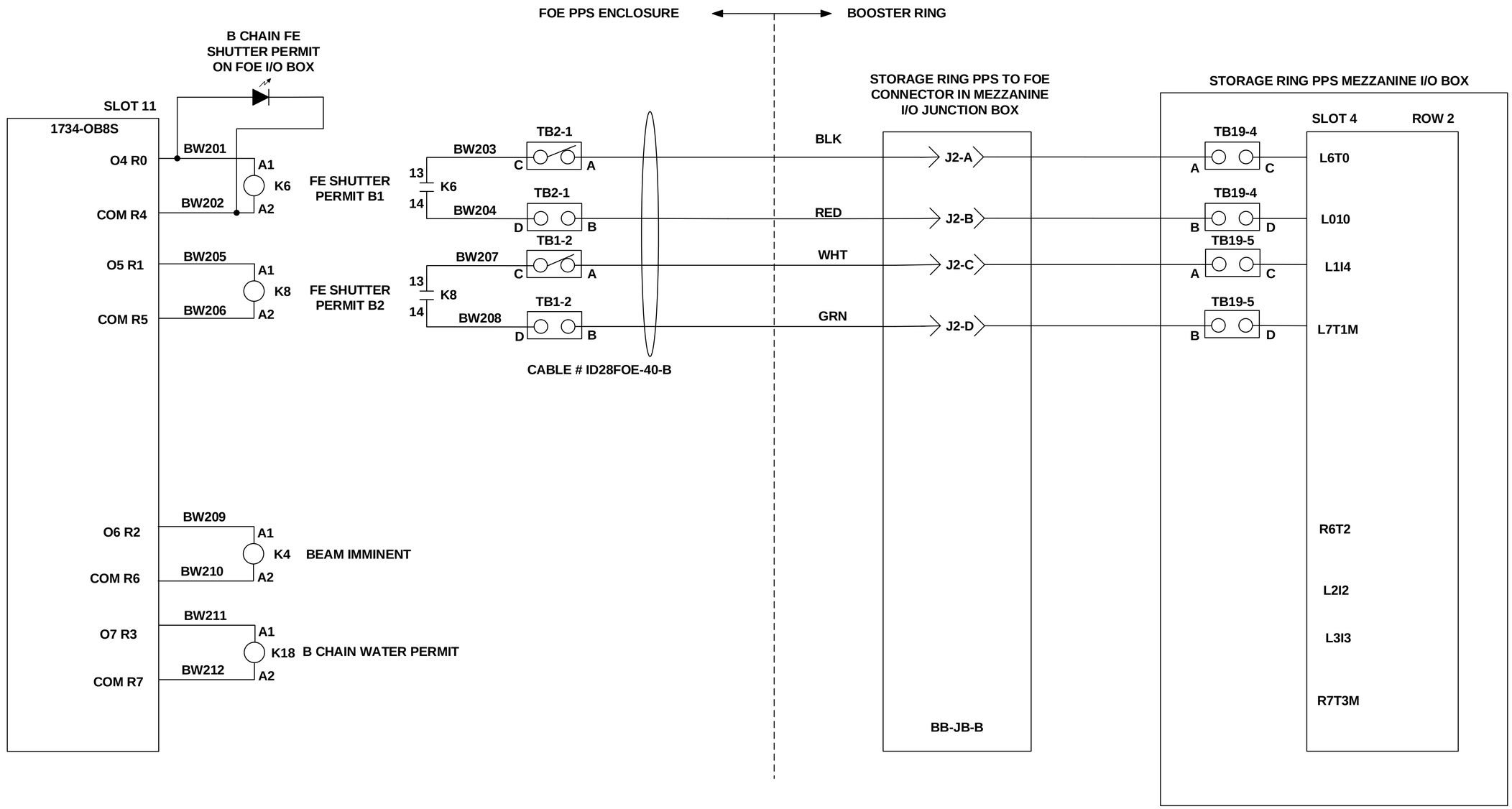

B

LT-EL-BL-EI	LT-EL-BL-EI-PPS-1280-91	E
DRAWING DIRECTORY	DRAWING NUMBER	REV

COMPUTER REPRODUCABLE | SCALE: N/A | SHEET 34 OF 46

LT-EL-BL-EI-PPS-1280-91

REV	DESCRIPTION	DATE	BY	CHECKED	APP
	SEE SHEET 1				

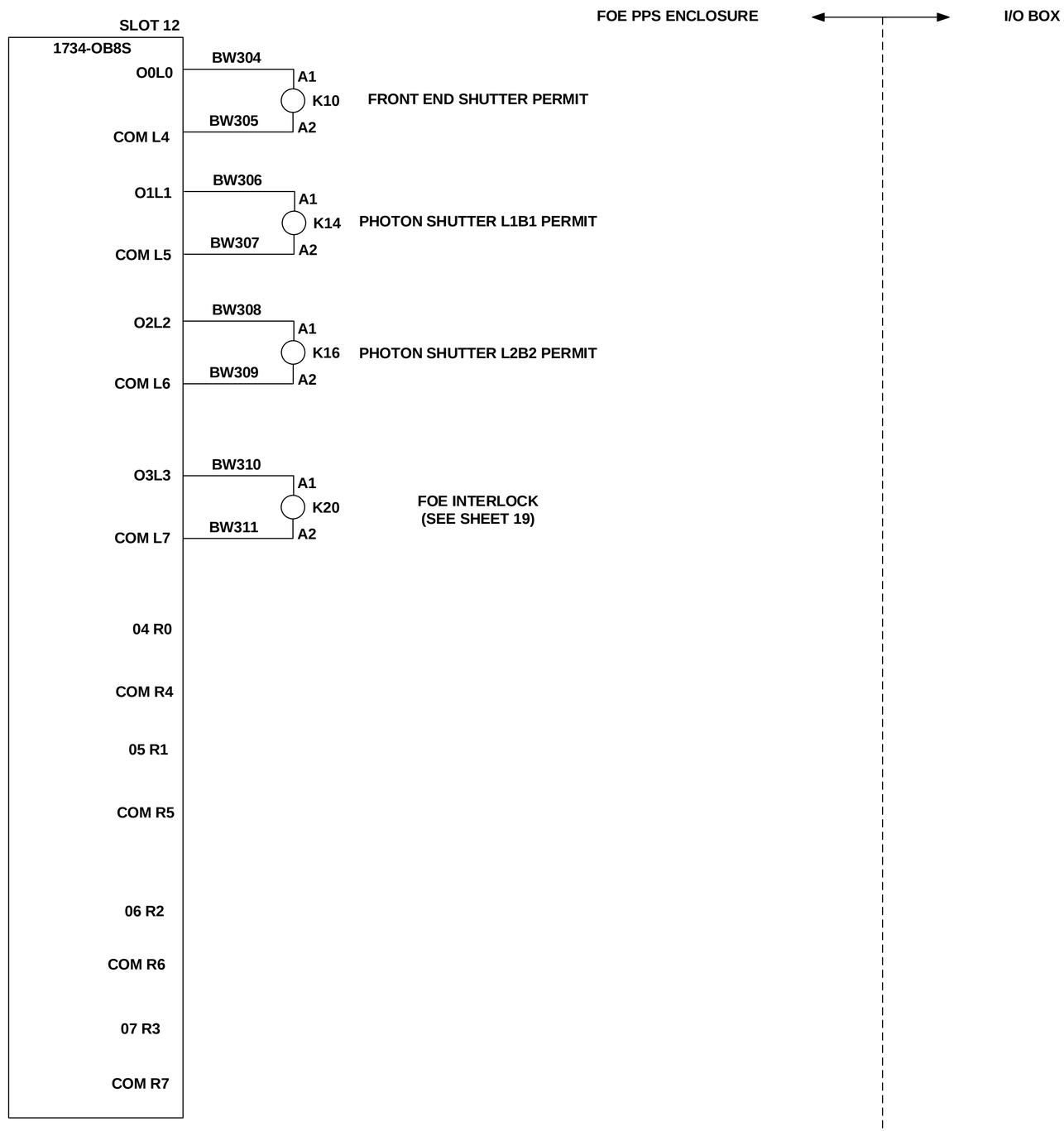

B

LT-EL-BL-EI (DRAWING DIRECTORY)	LT-EL-BL-EI-PPS-1280-91 (DRAWING NUMBER)	E (REV)
COMPUTER REPRODUCABLE	SCALE: N/A	SHEET 35 OF 46

LT-EL-BL-EI-PPS-1280-91

REV	DESCRIPTION	DATE	BY	CHECKED	APP
	SEE SHEET 1				

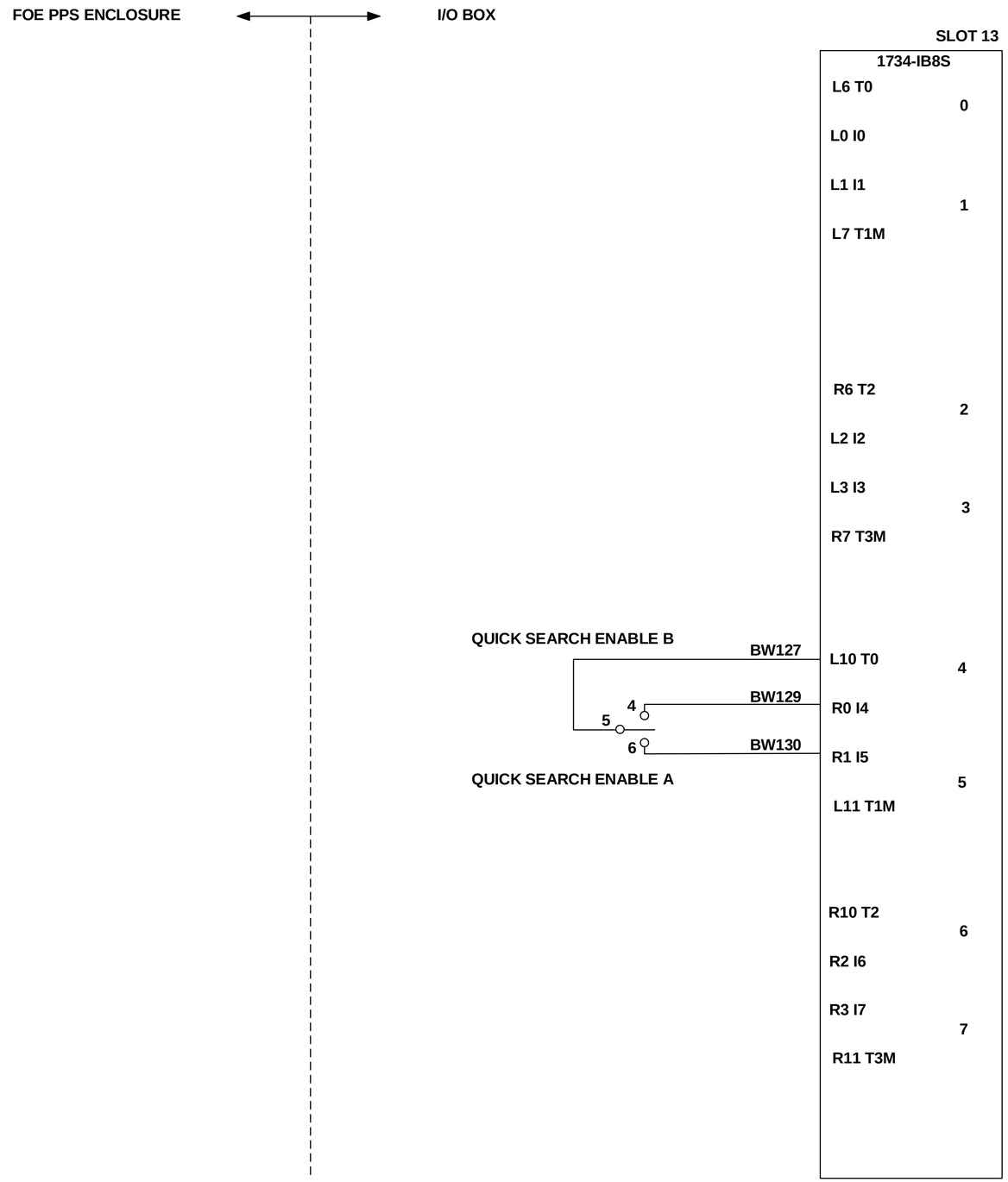

B

LT-EL-BL-EI	LT-EL-BL-EI-PPS-1280-91	E
DRAWING DIRECTORY	DRAWING NUMBER	REV

COMPUTER REPRODUCABLE | SCALE: N/A | SHEET 36 OF 46

LT-EL-BL-EI-PPS-1280-91

REV	DESCRIPTION	DATE	BY	CHECKED	APP
	SEE SHEET 1				

B CHAIN
+24V WIRES ARE RED
24V RTN WIRES ARE BLK
SIGNAL WIRES ARE ORN

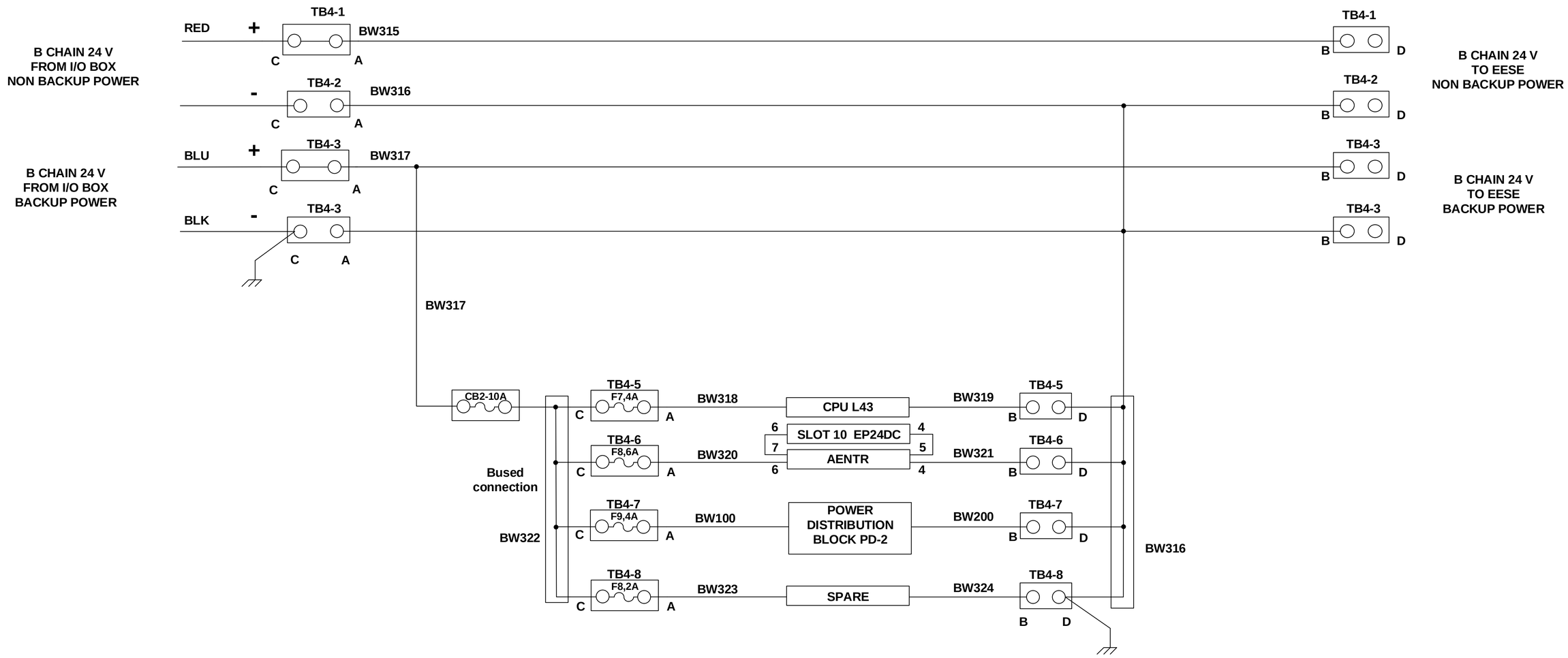

B

LT-EL-BL-EI	LT-EL-BL-EI-PPS-1280-91	E
DRAWING DIRECTORY	DRAWING NUMBER	REV

COMPUTER REPRODUCABLE | SCALE: N/A | SHEET 37 OF 46

LT-EL-BL-EI-PPS-1280-91

REV	DESCRIPTION	DATE	BY	CHECKED	APP
	SEE SHEET 1				

28-ID PPS NETWORK LAYOUT

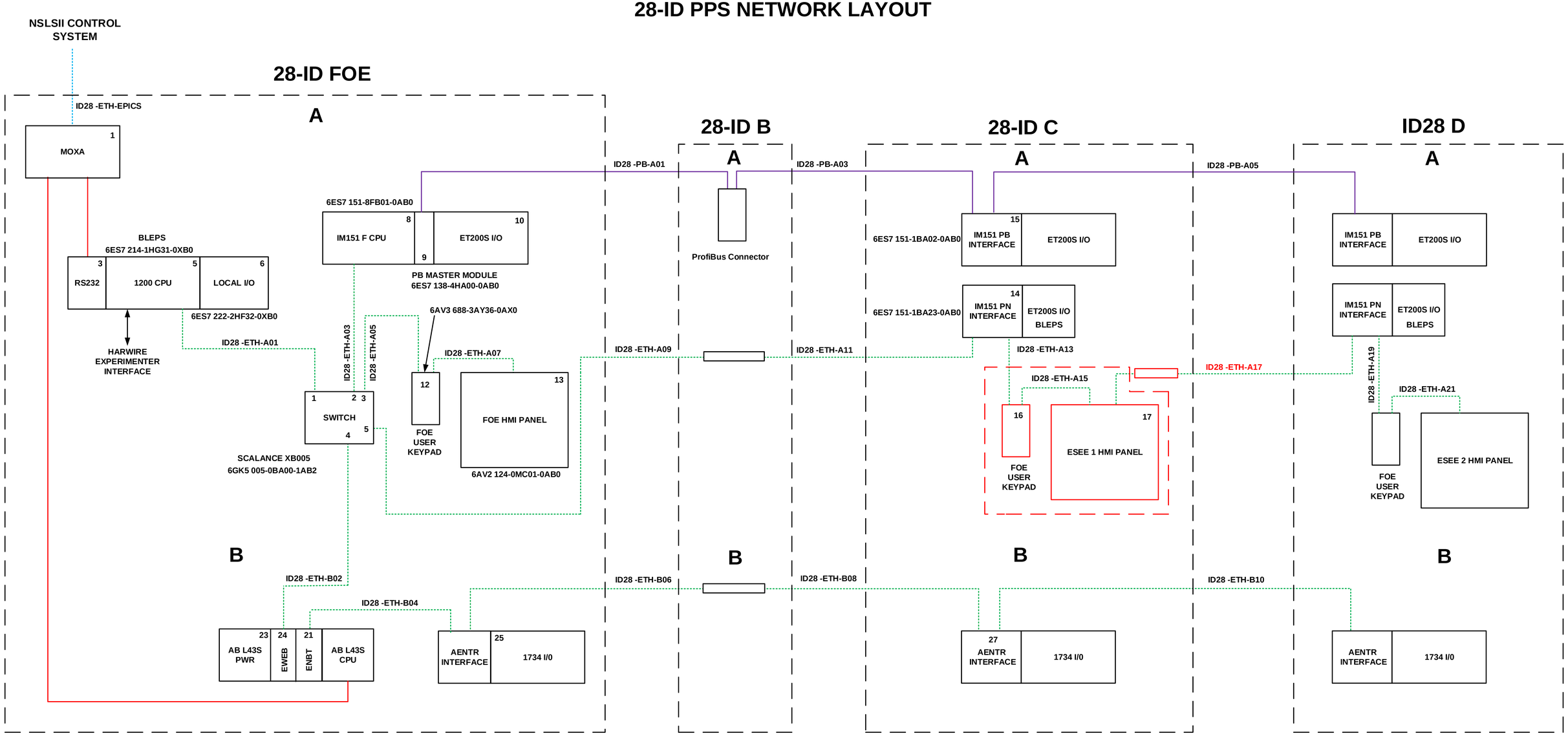

NOTES:
(1) FOE WATER INTERLOCK IO IS NOT IN ALL BEAMLINE PPS. IF PPS DOES NOT HAS WATER INTERLOCK IO, B CHAIN ETHERNET CABLE NUMBER WILL BE SEQUENTIALLY NAMED AFTER ID28 -ETH-004.
(2) BEAM LINE ID28 , ID?? HAVE WATER INTERLOCK IO.

LT-EL-BL-EI DRAWING DIRECTORY	LT-EL-BL-EI-PPS-1280-91 DRAWING NUMBER	E REV
COMPUTER REPRODUCABLE	SCALE: N/A	SHEET 38 OF 46

LT-EL-BL-EI-PPS-1280-91

REV	DESCRIPTION	DATE	BY	CHECKED	APP
	SEE SHEET 1				

28-ID FOE
PPS I/O BOX

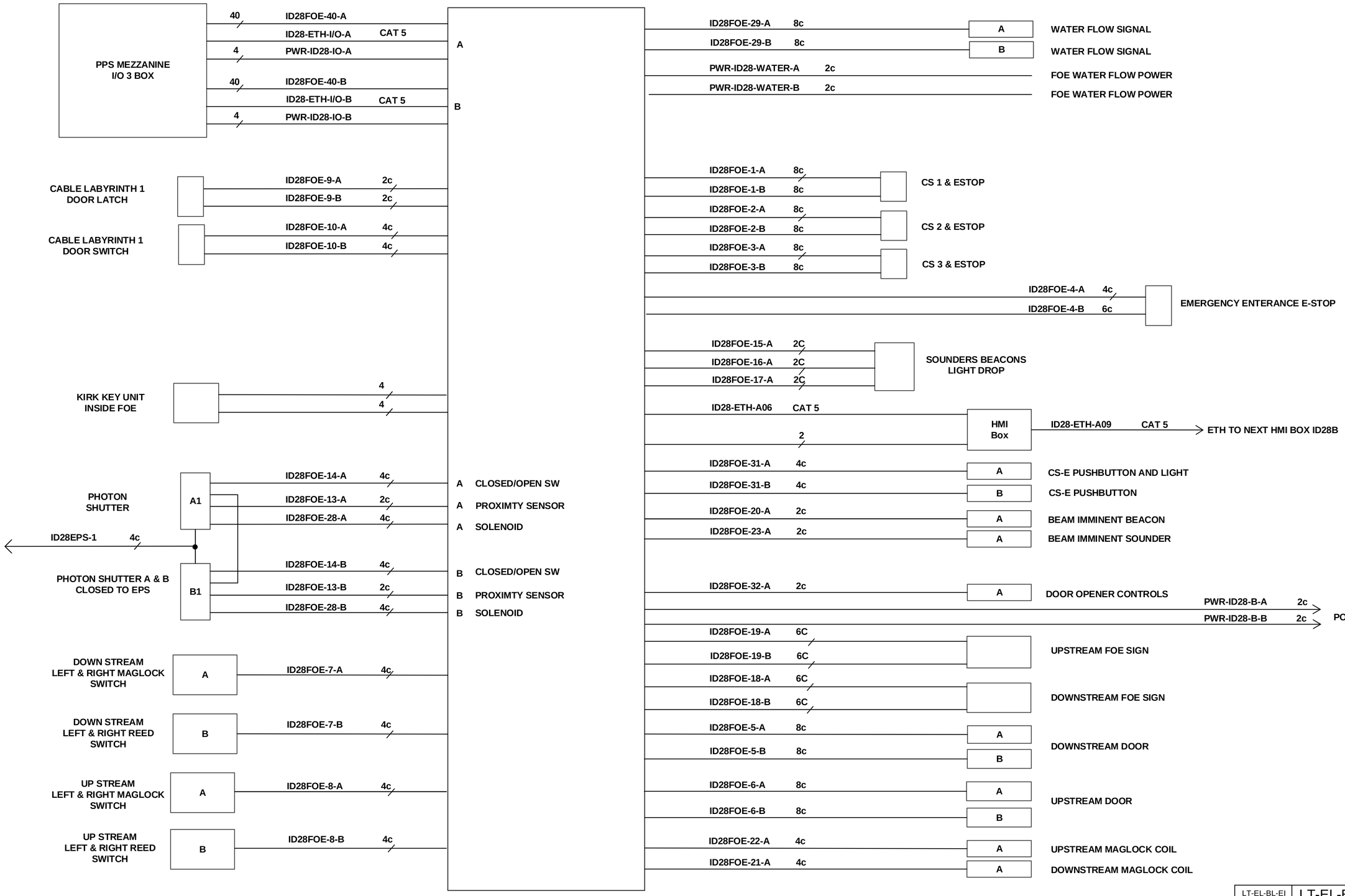

LT-EL-BL-EI	LT-EL-BL-EI-PPS-1280-91	E
DRAWING DIRECTORY	DRAWING NUMBER	REV
COMPUTER REPRODUCABLE	SCALE: N/A	SHEET 39 OF 46

LT-EL-BL-EI-PPS-1280-91

REV	DESCRIPTION	DATE	BY	CHECKED	APP
	SEE SHEET 1				

28-ID FOE Cable list

CABLE Num.	CHAIN	From LOCATION	To LOCATION	CONDUCTORS Needed
ID28FOE-1-A	A	FOE	CS1&Emergency stop	8
ID28FOE-1-B	B	FOE	CS1&Emergency stop	8
ID28FOE-2-A	A	FOE	CS2&Emergency stop	8
ID28FOE-2-B	B	FOE	CS2&Emergency stop	8
ID28FOE-3-A	A	FOE	CS3&Emergency stop	8
ID28FOE-3-B	B	FOE	CS3&Emergency stop	8
ID28FOE-4-A	A	FOE	Emergency Entrance E-Stop	6
ID28FOE-4-B	B	FOE	Emergency Entrance E-Stop	4
ID28FOE-5-A	A	FOE	Down Stream Left&Right Door Switches	8
ID28FOE-5-B	B	FOE	Down Stream Left&Right Door Switches	8
ID28FOE-6-A	A	FOE	Up Stream Left&Right Door Switch	8
ID28FOE-6-B	B	FOE	Up Stream Left&Right Door Switch	8
ID28FOE-7-A	A	FOE	Down Stream Left&Right Mag Lock Switch	4
ID28FOE-7-B	B	FOE	Down Stream Left&Right REED Switch	4
ID28FOE-8-A	A	FOE	UP Stream Left&Right Door MagLock Switch	4
ID28FOE-8-B	B	FOE	Up Stream Left&Right Door Reed Switch	4
ID28FOE-9-A	A	FOE	Cable Labyrinth1 Door Latch A Chain	2
ID28FOE-9-B	B	FOE	Cable Labyrinth1 Door Latch B Chain	2
ID28FOE-10-A	A	FOE	Cable Labyrinth1 Door Switch A Chain	4
ID28FOE-10-B	B	FOE	Cable Labyrinth1 Door Switch B Chain	4
ID28FOE-11-A	A	FOE	SPARE	2
ID28FOE-11-B	B	FOE	SPARE	2
ID28FOE-12-A	A	FOE	Cable Labyrinth2 Door Switch A Chain	6
ID28FOE-12-B	B	FOE	Cable Labyrinth2 Door Switch B Chain	8
ID28FOE-13-A	A	FOE	Photon shutter A1 Proximity sensor	2
ID28FOE-13-B	B	FOE	Photon shutter B1 Proximity sensor	2
ID28FOE-14-A	A	FOE	Photon shutter A1 Closed and OPEN Switch	4
ID28FOE-14-B	B	FOE	Photon shutter B1 Closed and Open Switch	4
ID28FOE-15-A	A	FOE	Search Sounder	2
ID28FOE-15-B	B	FOE	SPARE	
ID28FOE-16-A	A	FOE	Search Beacon	2
ID28FOE-16-B	B	FOE	SPARE	
ID28FOE-17-A	A	FOE	OverHead Lights	2
ID28FOE-17-B	B	FOE	SPARE	
ID28FOE-18-A	A	FOE	Down Stream A Chain Interlock, Entry Permit, Beam lights	6
ID28FOE-18-B	B	FOE	Down Stream B Chain Interlock, Entry Permit, Beam lights	6
ID28FOE-19-A	A	FOE	Up Stream A Chain Interlock, Entry Permit, Beam lights	6
ID28FOE-19-B	B	FOE	Up Stream B Chain Interlock, Entry Permit, Beam lights	6
ID28FOE-20-A	A	FOE	Beam Imminent Beacon	2
ID28FOE-20-B	B	FOE	SPARE	
ID28FOE-21-A	A	FOE	Down Stream LEFT&Right Door MagLOCK Coil	4
ID28FOE-21-B	B	FOE	SPARE	
ID28FOE-22-A	A	FOE	UP Stream LEFT&Right Door Maglock Coil	4
ID28FOE-22-B	B	FOE	SPARE	
ID28FOE-23-A	A	FOE	Beam Imminent Sounder	
ID28FOE-23-B	B	FOE	SPARE	
ID28FOE-28-A	A	FOE	Beam line Photon shutter A1solenoid	2
ID28FOE-28-B	B	FOE	Beam line Photon shutter B1 solenoid	2
ID28FOE-29-A	A	FOE	Water Box	8
ID28FOE-29-B	B	FOE	Water Box	8
ID28FOE-30-A	A	FOE	Inside Kirk Key switch cable	6
ID28FOE-30-B	B	FOE	Inside Kirk Key switch cable	4
ID28FOE-31-A	A	FOE	CS-E	4
ID28FOE-31-B	B	FOE	CS-E	4
ID28FOE-32-A	A	FOE	Door Opener Inhibiting Relay	4
ID28FOE-32-B	B	FOE	SPARE	4
ID28FOE-33-A	A	FOE	Photon shutter line 1 A1 Proximity sensor	2
ID28FOE-33-B	B	FOE	Photon shutter line 1 B1 Proximity sensor	2
ID28FOE-34-A	A	FOE	Photon shutter line 1 A1 Closed and OPEN Switch	4
ID28FOE-34-B	B	FOE	Photon shutter line 1 B1 Closed and Open Switch	4
ID28FOE-35-A	A	FOE	Photon shutter line 1 A1 Solenoid	2
ID28FOE-35-B	B	FOE	Photon shutter line 1 B1 Solenoid	2
SPARE				
ID28FOE-40-A	A	FOE	Storage Ring PPS	
ID28FOE-40-B	B	FOE	Storage Ring PPS	
SPARE				
ID28EPS-1		EPS	Photon shutter2 A&B Closed switches for EPS	4
ID28EPS-2		EPS	Photon shutter1 A&B Closed switches for EPS	4

LT-EL-BL-EI-PPS-1280-91

LT-EL-BL-EI (DRAWING DIRECTORY)	LT-EL-BL-EI-PPS-1280-91 (DRAWING NUMBER)	E (REV)
COMPUTER REPRODUCABLE	SCALE: N/A	SHEET 40 OF 46

REV	DESCRIPTION	DATE	BY	CHECKED	APP
	SEE SHEET 1				

28-ID FOE

Row 1

TB-3

End Cap For: D-UT 2,5/4 Quattro 3047170

CB-1

CIRCUIT BREAKER 10A

End Clamp E/UK 1

TB UT 2 5/4 Quattro 3044092

6x Fuse Holders DDFL4U

End Cap For Fuses: EPDDFL4U

2x Terminal Block UT 2 5/4-Quattro 3044542

Power Distribution 1 Phoenix-2315272

End Cap For: TB-UDK4

2x TB-UDK4

2x TB-UDK4

TB-D

4x Terminal Block UTTB 2,5-2DIO O-UL/UR-UL (Diode TB)

End Cap For: D-UTTB 2,5/4 3047293

Ground 3044092

Ground 3044092

K23

Shrack Relay Socket RT 78626

TB-4

End Cap For: D-UT 2,5/4 Quattro 3047170

Power Distribution 1 Phoenix-2315272

2x Terminal Block UT 2 5/4-Quattro 3044542

4x Fuse Holders DDFL4U

End Cap For Fuses: EPDDFL4U

CB-2

CIRCUIT BREAKER 10A

End Clamp E/UK 1

TB UT 2 5/4 Quattro 3044092

K29

Relay Socket ES 50

K49 LOCATED INSIDE HUTCH IN 6 X 6 BOX WITH LIGHT CIRCUIT

A CHAIN

Row 2

Siemens IM-151 6ES7-151-8FBOI-0AB0

Profibus 6ES7 138-4HA00-0AB0

Siemens PME 6ES7-193-4CC20-0AA0

6x Dual Slots Siemens 6ES7-193-4CF40-0AA0

Siemens PME 6ES7-193-4CC20-0AA0

Siemens Single Slot 6ES7-193-4CA40-0AA0

Siemens PME 6ES7-193-4CC20-0AA0

4x Single Slot Siemens 6ES7-193-4CA40-0AA0

3x Dual Slots Siemens 6ES7-193-4CF40-0AA0

K9

Altech Relay OA5601

K11

Altech Relay OA5601

Row 3

End Clamp E/UK 1

TB-1

82x Terminal Block UTTB 2,5: 3044636

End Cap For: D-UTTB 2,5/4 3047293

2x Ground 3044092

K3

Shrack Relay Socket RT 78626

K5

Shrack Relay Socket RT 78626

K13

Shrack Relay Socket RT 78626

K21

Shrack Relay Socket RT 78626

K15

IDEC Relay Socket SF1V-4-07L

K17

IDEC Relay Socket SF1V-4-07L

K1

Altech Relay OA5601

K7

Altech Relay OA5601

AUX DEVICE A CHAIN

Klaschka D-75242

End Clamp E/UK 1

B CHAIN

Row 4

End Cap For: D-UTTB 2,5/4 3047293

End Clamp E/UK 1

TB-5

4x Terminal Block UTTB 2,5: 3044636

TB UT 2 5/4 Quattro 3044092

End Cap For: D-UT 2,5/4 Quattro 3047170

K19

Shrack Relay Socket RT 78626

End Clamp E/UK 1

Allen Bradley 1734 AENTR Ethernet Interface

10x Single Slots Allen Bradley 1734-Top3

Power Module 1734 EP24DC

Single Slot Allen Bradley 1734-Top3

Power Module 1734 EP24DC

12x Single Slots Allen Bradley 1734-Top3

AUX DEVICE B CHAIN

Klaschka D-75242

End Clamp E/UK 1

Row 5

End Clamp E/UK 1

TB-2

70x Terminal Block UTTB 2,5: 3044636

End Cap For: D-UTTB 2,5/4 3047293

2x Ground 3044092

K4

Shrack Relay Socket RT 78626

K12

Shrack Relay Socket RT 78626

K18

Shrack Relay Socket RT 78626

K14

Elesta Relay Socket SRD-SIM4 H300725

K16

Elesta Relay Socket SRD-SIM4 H300725

K2

Phoenix PSR-SCF 24UC Safety Relay Socket 2981444

K6

Phoenix PSR-SCF 24UC Safety Relay Socket 2981444

K8

Phoenix PSR-SCF 24UC Safety Relay Socket 2981444

K10

Phoenix PSR-SCF 24UC Safety Relay Socket 2981444

LT-EL-BL-EI-PPS-1280-91

LT-EL-BL-EI (DRAWING DIRECTORY)	LT-EL-BL-EI-PPS-1280-91 (DRAWING NUMBER)	E (REV)
COMPUTER REPRODUCABLE	SCALE: N/A	SHEET 41 OF 46

REV	DESCRIPTION	DATE	BY	CHECKED	APP
	SEE SHEET 1				

ROW 1:				
SLOT	MODULE	SOCKET	DESCRIPTION	VENDOR
	[5]			
	[11]			
	[7]			
1	WMZS1B10	N/A	CIRCUIT BREAKER 1	AUTOMATION DIRECT
	[7]			
TB-3	[6]	1>6 [8]	7>8 [7]	
2	2315272	N/A	PD-1	PHOENIX
	1>4 [13]			
TBD	1>4 [18]	[3]	[2]	[2]
K23	OW5669.12/983/61	RT 78626	RELAY	SHRACK
3	2315272	N/A	PD-2	PHOENIX
TB4	[11]	4>3 [7]	[6]	8>5 [8]
	[7]			
4	WMZS1B10	N/A	CIRCUIT BREAKER 2	AUTOMATION DIRECT
	[7]			
	[5]			
ROW 2:				
SLOT	MODULE	SOCKET	DESCRIPTION	VENDOR
	6ES7-151-8FBOI-0AB0	N/A	IM-151	SIEMENS
	6ES7-138-4HA00-0AB0	N/A	PROFIBUS-DP	SIEMENS
1	6ES7-138-4CA50-0AB0	6ES7-193-4CC20-0AA0	POWER MODULE PM-E	SIEMENS
2	6ES7-131-4BF00-0AB0	6ES7-193-4CF40-0AA0	8FDI	SIEMENS
3	6ES7-131-4BF00-0AB0	6ES7-193-4CF40-0AA0	8FDI	SIEMENS
4	6ES7-131-4BF00-0AB0	6ES7-193-4CF40-0AA0	8FDI	SIEMENS
5	6ES7-131-4BF00-0AB0	6ES7-193-4CF40-0AA0	8FDI	SIEMENS
6	6ES7-131-4BF00-0AB0	6ES7-193-4CF40-0AA0	8FDI	SIEMENS
7	6ES7-131-4BF00-0AB0	6ES7-193-4CF40-0AA0	8FDI	SIEMENS
8	6ES7-138-4CA50-0AB0	6ES7-193-4CC20-0AA0	POWER MODULE PM-E	SIEMENS
9	6ES7-131-4BF00-0AB0	6ES7-193-4CA40-0AA0	8DI	SIEMENS
10	6ES7-138-4CA50-0AB0	6ES7-193-4CC20-0AA0	POWER MODULE PM-E	SIEMENS
11	6ES7-132-4BF00-0AA0	6ES7-193-4CA40-0AA0	8DO	SIEMENS
12	6ES7-131-4BF00-0AB0	6ES7-193-4CA40-0AA0	8DI	SIEMENS
13	6ES7-131-4BF00-0AB0	6ES7-193-4CA40-0AA0	8DI	SIEMENS
14	6ES7-132-4BF00-0AA0	6ES7-193-4CA40-0AA0	8DO	SIEMENS
15	6ES7-138-4FB03-0AA0	6ES7-193-4CF40-0AA0	4DO	SIEMENS
16	6ES7-138-4FB03-0AA0	6ES7-193-4CF40-0AA0	4DO	SIEMENS
17	6ES7-138-4FB03-0AA0	6ES7-193-4CF40-0AA0	4DO	SIEMENS
K9	OA5601		ALTECH RELAY	BNL
K11	OA5601		ALTECH RELAY	BNL

LT-EL-BL-EI-PPS-1280-91

REV	DESCRIPTION	DATE	BY	CHECKED	APP
	SEE SHEET 1				

ROW 3:					
TB 1	[5]	[2]	[2]	[3]	1>82 [1]
RELAY	MODULE	SOCKET	DESCRIPTION	VENDOR	
K3	OW5669.12/983/61	RT 78626	RELAY	SHRACK	
K5	OW5669.12/983/61	RT 78626	RELAY	SHRACK	
K13	OW5669.12/983/61	RT 78626	RELAY	SHRACK	
K21	OW5669.12/983/61	RT 78626	RELAY	SHRACK	
K15	RF1V-3A1BL-D24	SF1V-4-07L	RELAY	IDEC	
K17	RF1V-3A1BL-D24	SF1V-4-07L	RELAY	IDEC	
K1	OA5601		ALTECH RELAY	BNL	
K7	OA5601		ALTECH RELAY	BNL	
	D-75242	N/A	AUX DEVICE A CHAIN	KLASCHKA	
	[5]				
ROW 4:					
	[5]				
TB 5	[3]	1>4 [1]	[11]	4 [7]	
K19	OW5669.12/983/61	RT 78626	RELAY	SHRACK	
	[5]				
SLOT	MODULE	SOCKET	DESCRIPTION	VENDOR	
	1734-AENTR	N/A	24V DC EHTERNET ADAPTER	AB	
1	1734-IB8S	1734-TOP3 (2)	8 INPUT SAFETY	AB	
2	1734-IB8S	1734-TOP3 (2)	8 INPUT SAFETY	AB	
3	1734-IB8S	1734-TOP3 (2)	8 INPUT SAFETY	AB	
4	1734-IB8S	1734-TOP3 (2)	8 INPUT SAFETY	AB	
5	1734-IB8S	1734-TOP3 (2)	8 INPUT SAFETY	AB	
	1734-EP24DC	N/A	POWER MODULE PM-E	AB	
6	1834-IB8	1734-TOP3	STANDARD INPUT MODULE	AB	
	1734-EP24DC	N/A	POWER MODULE PM-E	AB	
7	1734-OB8E	1734-TOP3	8 CURRENT SOURCE	AB	
8	1734-IB8	1734-TOP3	STANDARD INPUT MODULE	AB	
9	1734-IB8	1734-TOP3 (2)	STANDARD INPUT MODULE	AB	
10	1734-OW4	1734-TOP3	4 FORM RELAY MODULE	AB	
11	1734-IB8S	1734-TOP3 (2)	8 INPUT SAFETY	AB	
12	1734-IB8S	1734-TOP3 (2)	8 INPUT SAFETY	AB	
13	1734-IB8S	1734-TOP3 (2)	8 INPUT SAFETY	AB	
14	1734-OW4	1734-TOP3	4 FORM RELAY MODULE	AB	
	D-75242	N/A	AUX DEVICE A CHAIN	KLASCHKA	
	[5]				
ROW 5:					
TB-2	[5]	[3]	1>70 [1]	[2]	[2]
RELAY	MODULE	SOCKET	DESCRIPTION	VENDOR	
K4	OW5669.12/983/61	RT 78626	RELAY	SHRACK	
K12	OW5669.12/983/61	RT 78626	RELAY	SHRACK	
K18	OW5669.12/983/61	RT 78626	RELAY	SHRACK	
K14	H300725	N/A	SRD-SIM4 RELAY	ELESTA	
K16	H300725	N/A	SRD-SIM4 RELAY	ELESTA	
K2	2981444	N/A	PSR-SCF 24UC SAFETY RELAY	PHOENIX	
K6	2981444	N/A	PSR-SCF 24UC SAFETY RELAY	PHOENIX	
K8	2981444	N/A	PSR-SCF 24UC SAFETY RELAY	PHOENIX	
K10	2981444	N/A	PSR-SCF 24UC SAFETY RELAY	PHOENIX	

REV	DESCRIPTION	DATE	BY	CHECKED	APP
	SEE SHEET 1				

COLOR	PROD #	TYPE
[1]	3044636	Double-level terminal block - UTTB 2,5
[2]	3044092	GROUND
[3]	3047293	End cover - D-UTTB 2,5/4
[4]	3047303	Spacer plate - DP-UTTB 2,5/4
[5]	1201413	End clamp - E/UK 1
[6]	EPDDFL4U	End Plate; Term Blk; DIN Rail; Gray;
[7]	3044542	DIN Rail Terminal Blocks UT 2 5/4-QUATTRO
[8]	DDFL-4U	24V FUSES
[9]	3044076	Feed-through terminal block - UT 2,5
[10]	3047028	End cover - D-UT 2,5/10
[11]	3047170	End cover - D-UT 2,5/4-QUATTRO
[12]	3044102	Feed-through terminal block - UT 4
[13]	2775016	Feed-through terminal block - UDK 4
[14]	KN-TL-14	KONNECT IT 3 CIRCUIT TERMINAL BLOCK
[15]	KN-EC-TL	3 CIRCUIT TERMINAL BLOCK COVER
[16]	CDL4U(E)DD2	99321 ALTECH DIODE TERMINAL BLOCK
[17]	EPCDL4U	ALTECH DIODE TB END COVER
[18]	3044636	Diode TB - UTTB 2,5 O-UL/UR-UL

[1] & [18] are the same part except [18] has been modified with diodes.

[1]

[7]

[13]

[2]

[8]

[14]

[3]

[9]

[15]

[4]

[10]

[16]

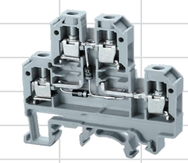

[5]

[11]

[17]

[6]

[12]

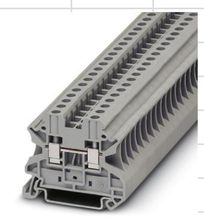

[18]

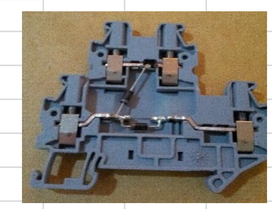

Paired part numbers are color coordinated.

LT-EL-BL-EI (DRAWING DIRECTORY)	LT-EL-BL-EI-PPS-1280-91 (DRAWING NUMBER)	E (REV)
COMPUTER REPRODUCABLE	SCALE: N/A	SHEET 44 OF 46

LT-EL-BL-EI-PPS-1280-91

REV	DESCRIPTION	DATE	BY	CHECKED	APP
	SEE SHEET 1				

28-ID FOE Lower Box

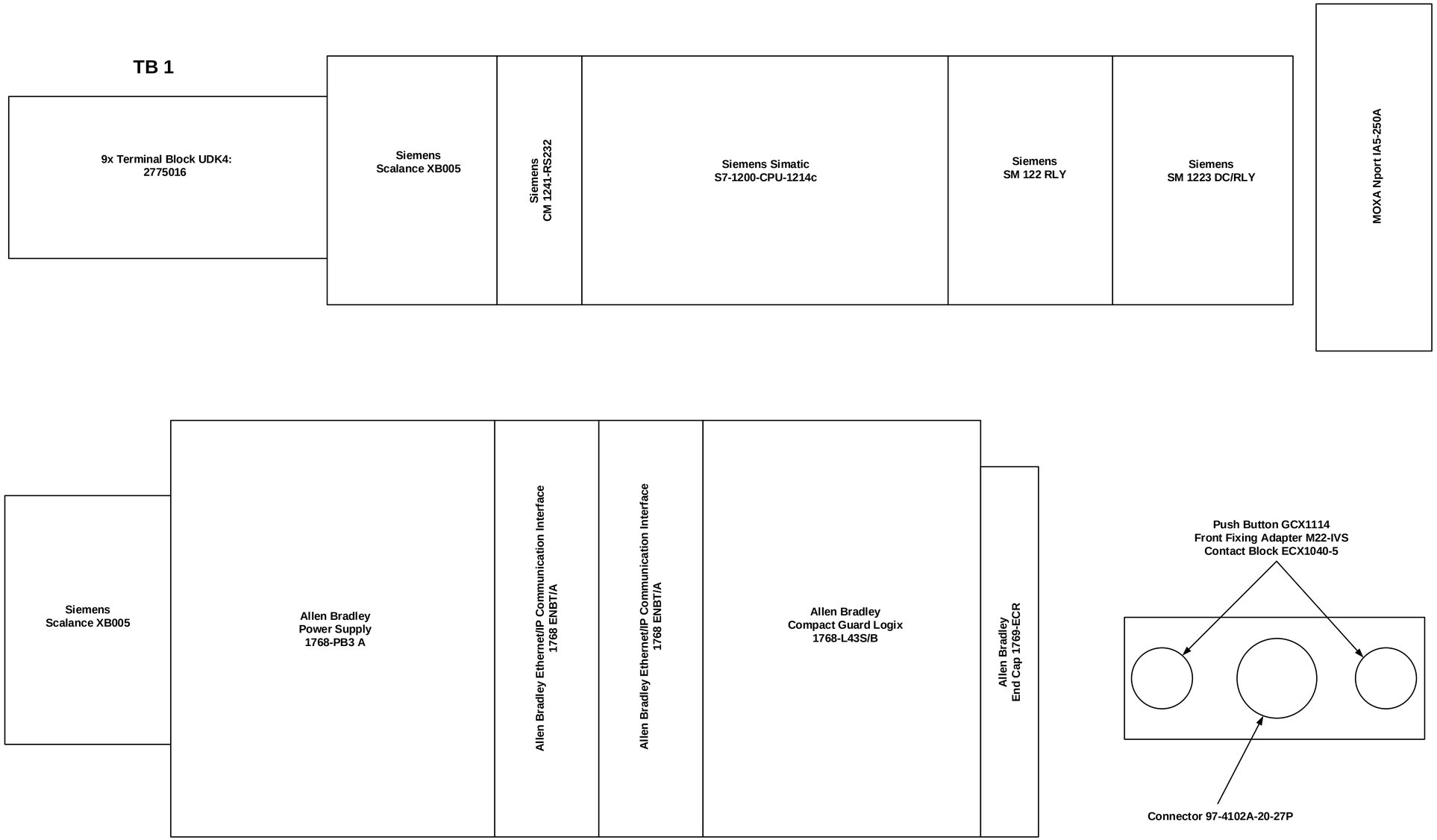

LT-EL-BL-EI (DRAWING DIRECTORY)	LT-EL-BL-EI-PPS-1280-91 (DRAWING NUMBER)	E (REV)
COMPUTER REPRODUCABLE	SCALE: N/A	SHEET 45 OF 46

LT-EL-BL-EI-PPS-1280-91

REV	DESCRIPTION	DATE	BY	CHECKED	APP
	SEE SHEET 1				

ID BEAM LINE 24 V POWER
LOCATED IN MEZZANINE I/O BOX

A CHAIN ID POWER

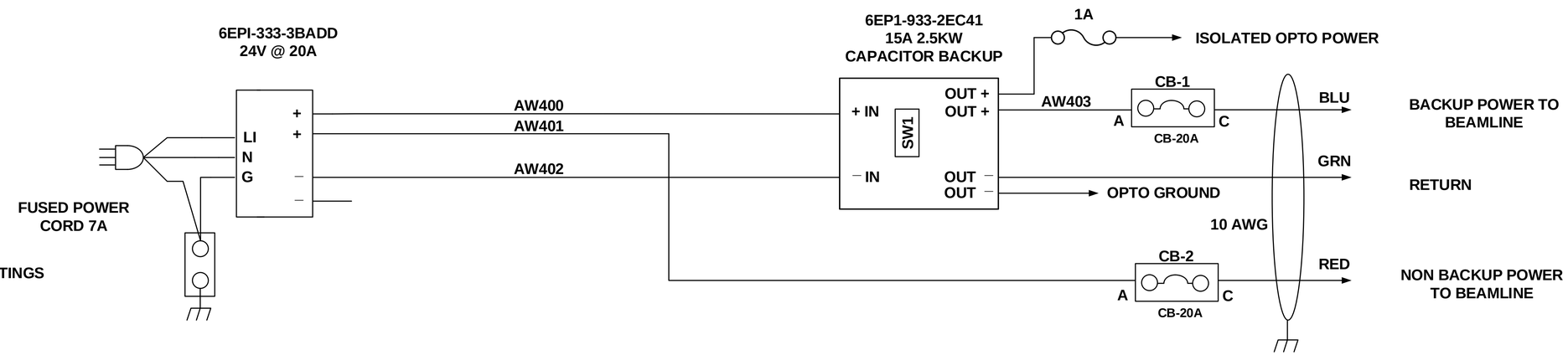

BACKUP SW SETTINGS
SW1

	1	2
1	X	
2		X
3		X
4	X	
5	X	
6	X	
7	X	
8	X	
9	X	
10	X	
11		X
12	X	

B CHAIN ID POWER

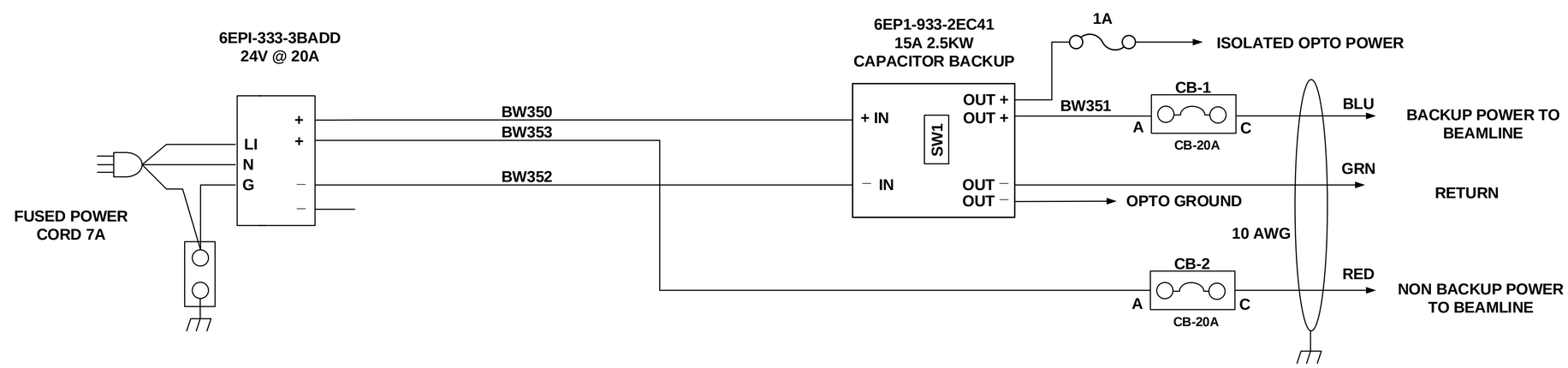

LT-EL-BL-EI (DRAWING DIRECTORY)	LT-EL-BL-EI-PPS-1280-91 (DRAWING NUMBER)	E (REV)
COMPUTER REPRODUCABLE	SCALE: N/A	SHEET 46 OF 46

LT-EL-BL-EI-PPS-1280-91

REV	DESCRIPTION	DATE	BY	CHECKED	APP
A	INITIAL RELEASE	02/08/2018	SEJ	JM	SB

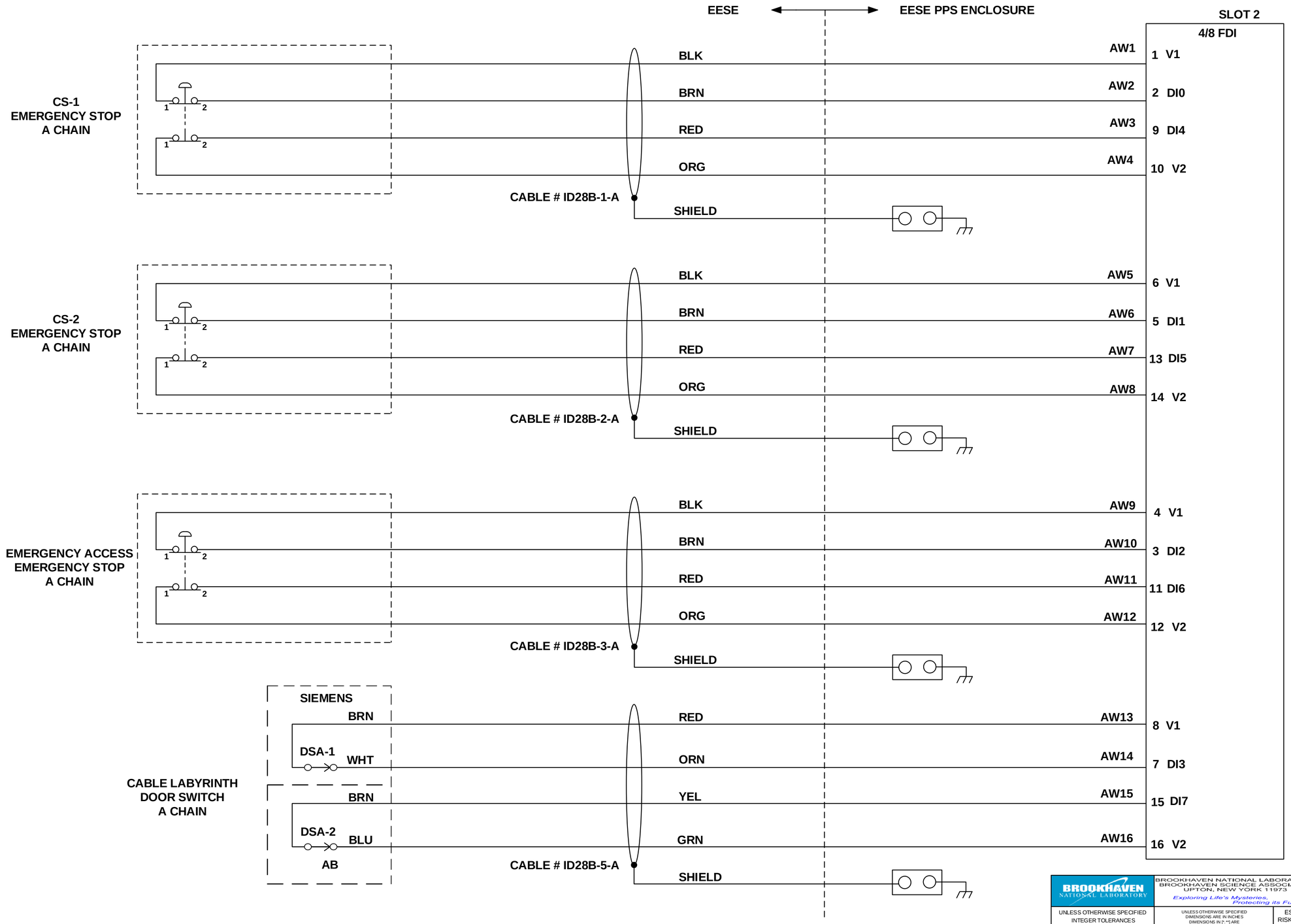

A

LT-EL-BL-EI-PPS-1280-95

BROOKHAVEN NATIONAL LABORATORY

BROOKHAVEN NATIONAL LABORATORY
BROOKHAVEN SCIENCE ASSOCIATES
UPTON, NEW YORK 11973
Exploring Life's Mysteries, Protecting its Future

NSLSII NATIONAL SYNCHROTRON LIGHT SOURCE II

UNLESS OTHERWISE SPECIFIED
INTEGER TOLERANCES ± .06
DECIMAL TOLERANCES
.X ± .030
.XX ± .015
.XXX ± .010
ANGULAR TOLERANCE ± 0.5°
UNSPECIFIED RADII .02 MAX
125 BREAK SHARP CORNERS AND EDGES
FINISH MAX .03 MIN .005

UNLESS OTHERWISE SPECIFIED DIMENSIONS ARE IN INCHES
DIMENSIONS IN [*.**] ARE MILLIMETERS EQUIV. FOR REF. ONLY

INTERPRET DRAWING AS PER ANSI Y14.5 OR Y32.2

ESH&Q RISK LEVEL A-1

OUTSTANDING ECN'S

		DATE
DRWN BY	S. JARZABKOWSKI	02/08/2018
CHK BY	J.MALLEY	02/12/2018
ENG APP	S. BUDA	02/09/2018
SUPV APP	G. GANETIS	02/09/2018
QA APP	E.CHESWICK	02/09/2018
ESH APP	R. LEE	02/09/2018

WIRING DIAGRAM
28-ID-B (PDF-B)
A CHAIN AND B CHAIN

DRAWING DIRECTORY	DRAWING NUMBER	REV
LT-EL-BL-EI	LT-EL-BL-EI-PPS-1280-95	A

COMPUTER REPRODUCABLE | SCALE: N/A | SHEET 1 of 21

JOB NUMBER | USED ON DWG. NO.

REV	DESCRIPTION	DATE	BY	CHECKED	APP
	SEE SHEET 1				

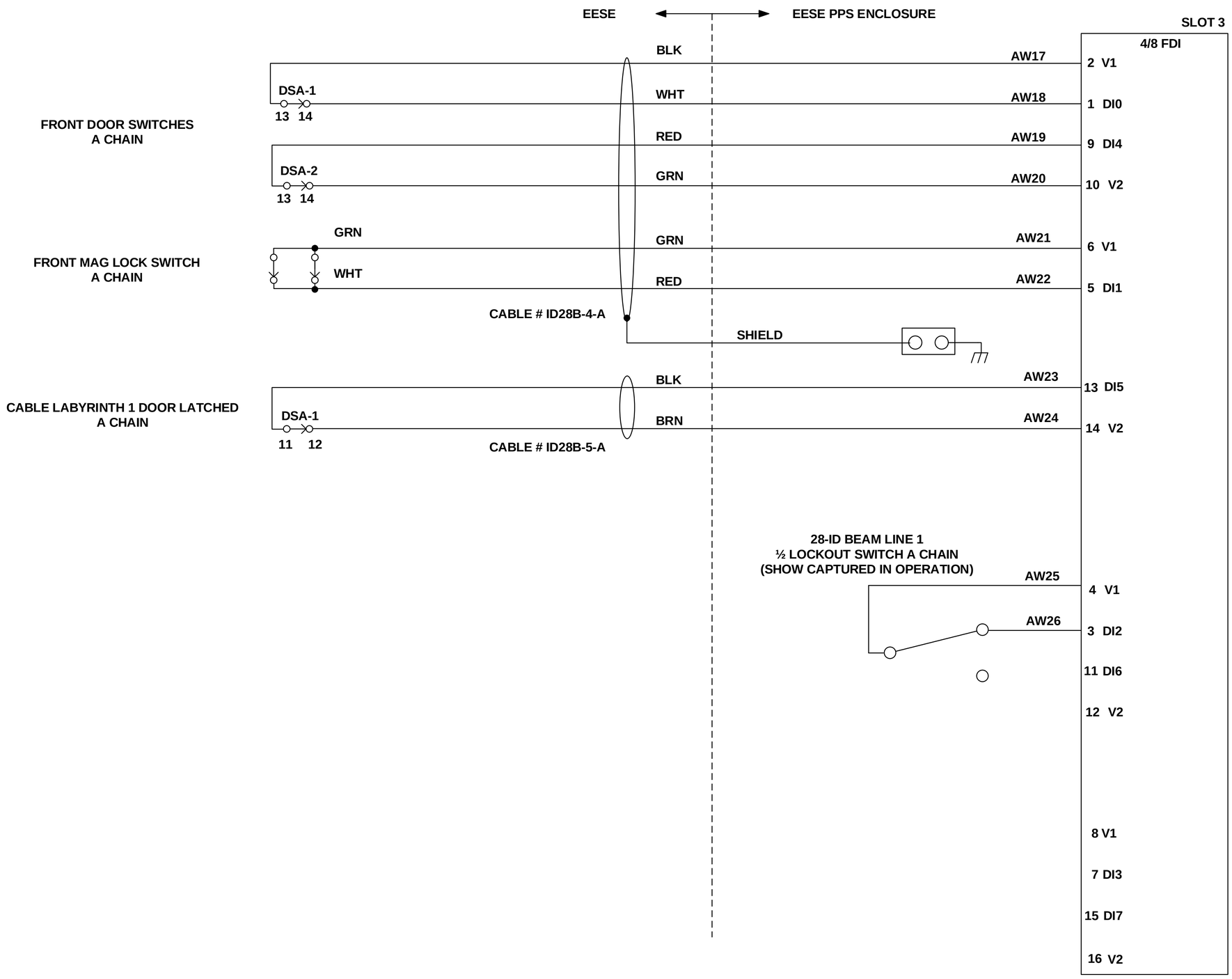

A

LT-EL-BL-EI	LT-EL-BL-EI-PPS-1280-95	A
DRAWING DIRECTORY	DRAWING NUMBER	REV

COMPUTER REPRODUCABLE | SCALE: N/A | SHEET 2 of 21

LT-EL-BL-EI-PPS-1280-95

REV	DESCRIPTION	DATE	BY	CHECKED	APP
	SEE SHEET 1				

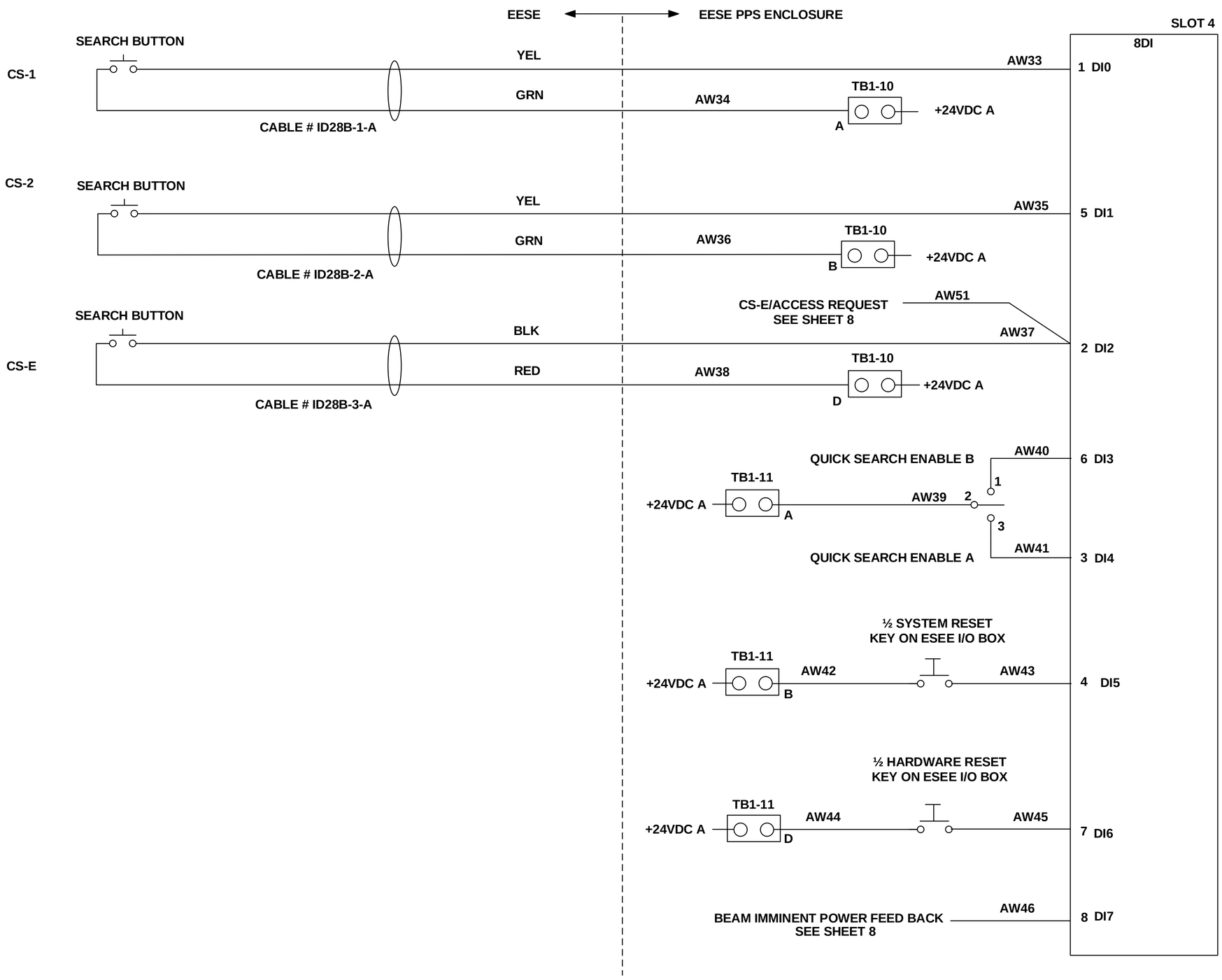

A

LT-EL-BL-EI	LT-EL-BL-EI-PPS-1280-95	A
DRAWING DIRECTORY	DRAWING NUMBER	REV
COMPUTER REPRODUCABLE	SCALE: N/A	SHEET 3 of 21

LT-EL-BL-EI-PPS-1280-95

REV	DESCRIPTION	DATE	BY	CHECKED	APP
	SEE SHEET 1				

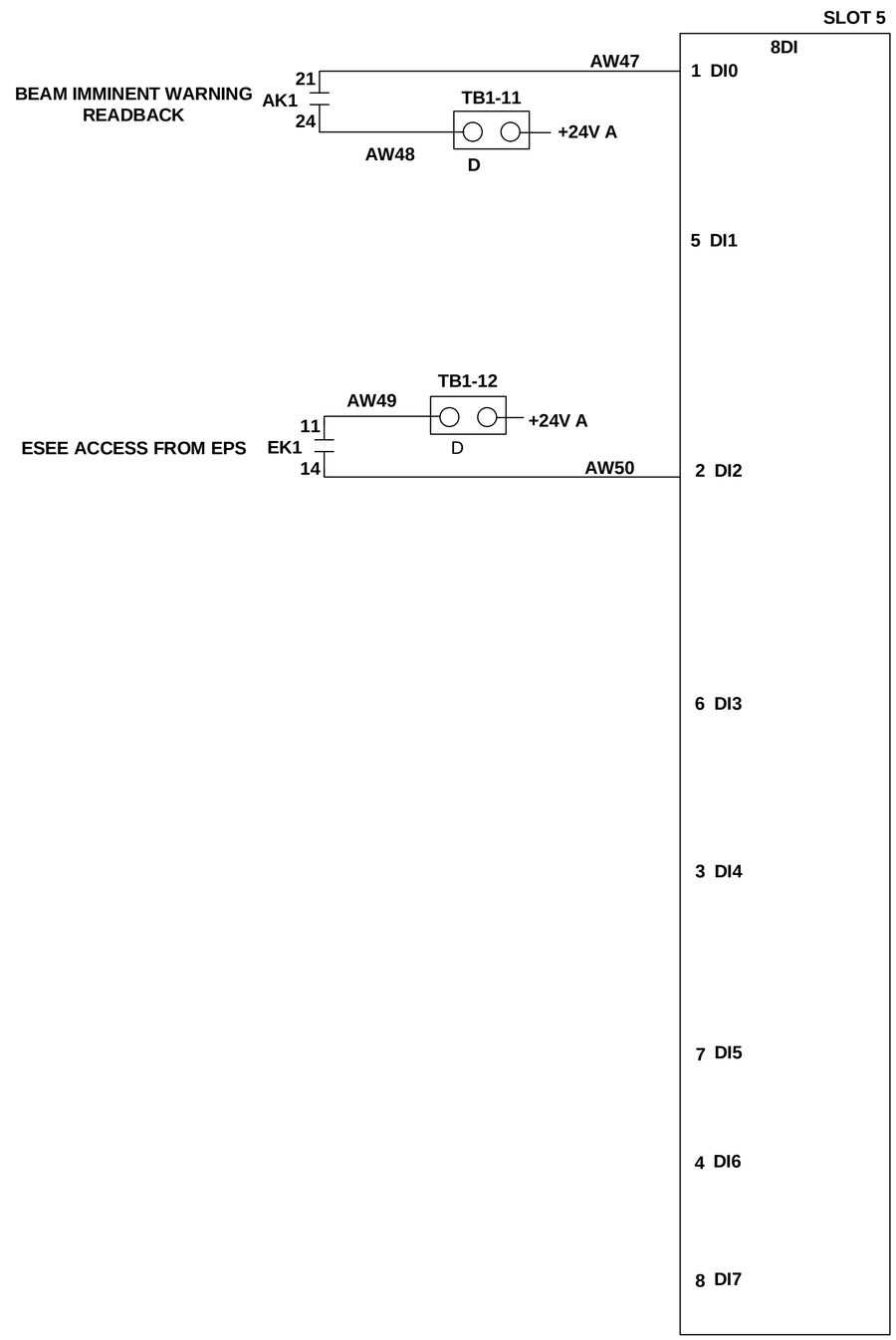

A

LT-EL-BL-EI	LT-EL-BL-EI-PPS-1280-95	A
DRAWING DIRECTORY	DRAWING NUMBER	REV

COMPUTER REPRODUCABLE | SCALE: N/A | SHEET 4 of 21

LT-EL-BL-EI-PPS-1280-95

REV	DESCRIPTION	DATE	BY	CHECKED	APP
	SEE SHEET 1				

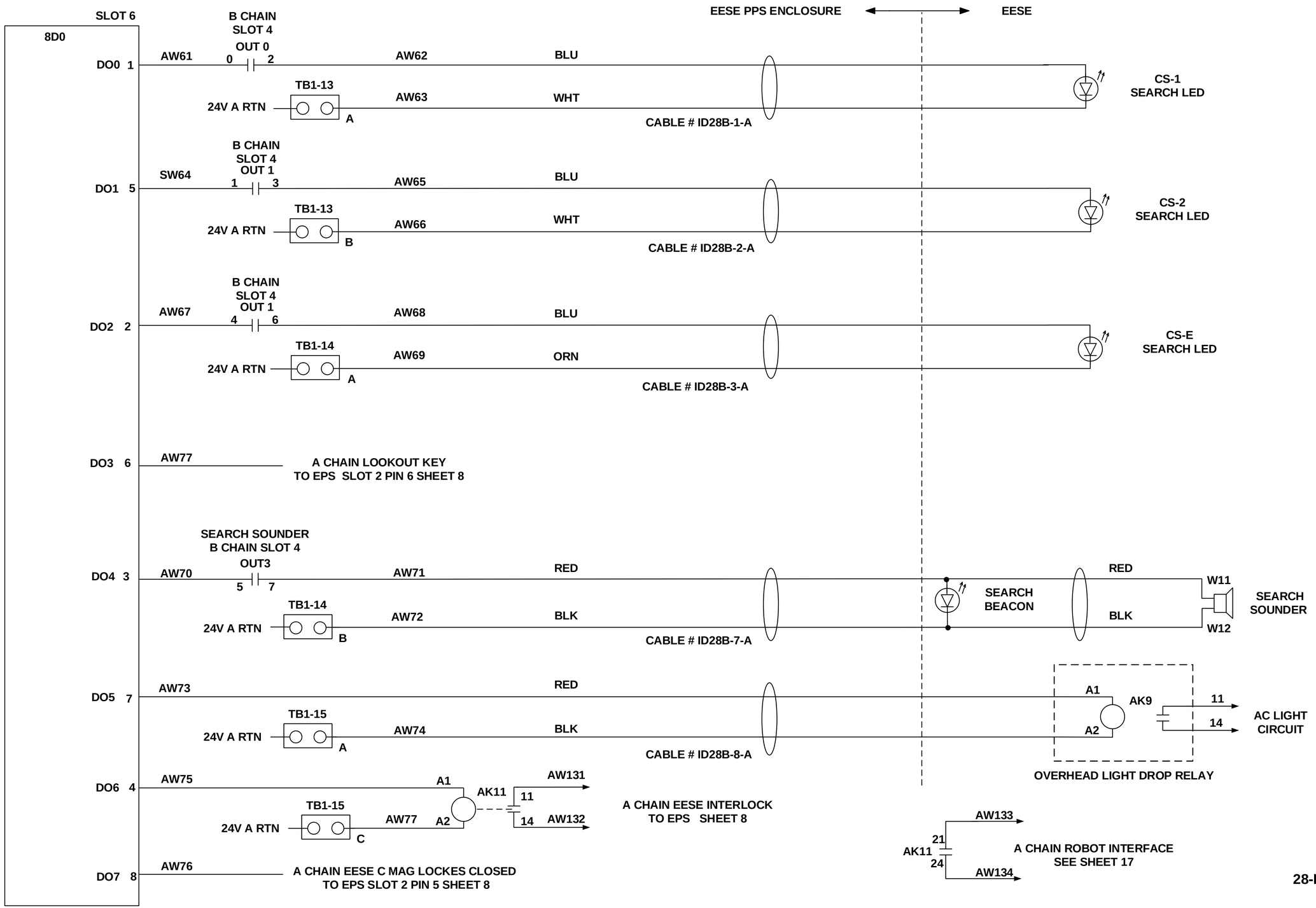

28-ID EESE C

A

LT-EL-BL-EI (DRAWING DIRECTORY)	LT-EL-BL-EI-PPS-1280-95 (DRAWING NUMBER)	A (REV)
COMPUTER REPRODUCABLE	SCALE: N/A	SHEET 5 of 21

LT-EL-BL-EI-PPS-1280-95

REV	DESCRIPTION	DATE	BY	CHECKED	APP
	SEE SHEET 1				

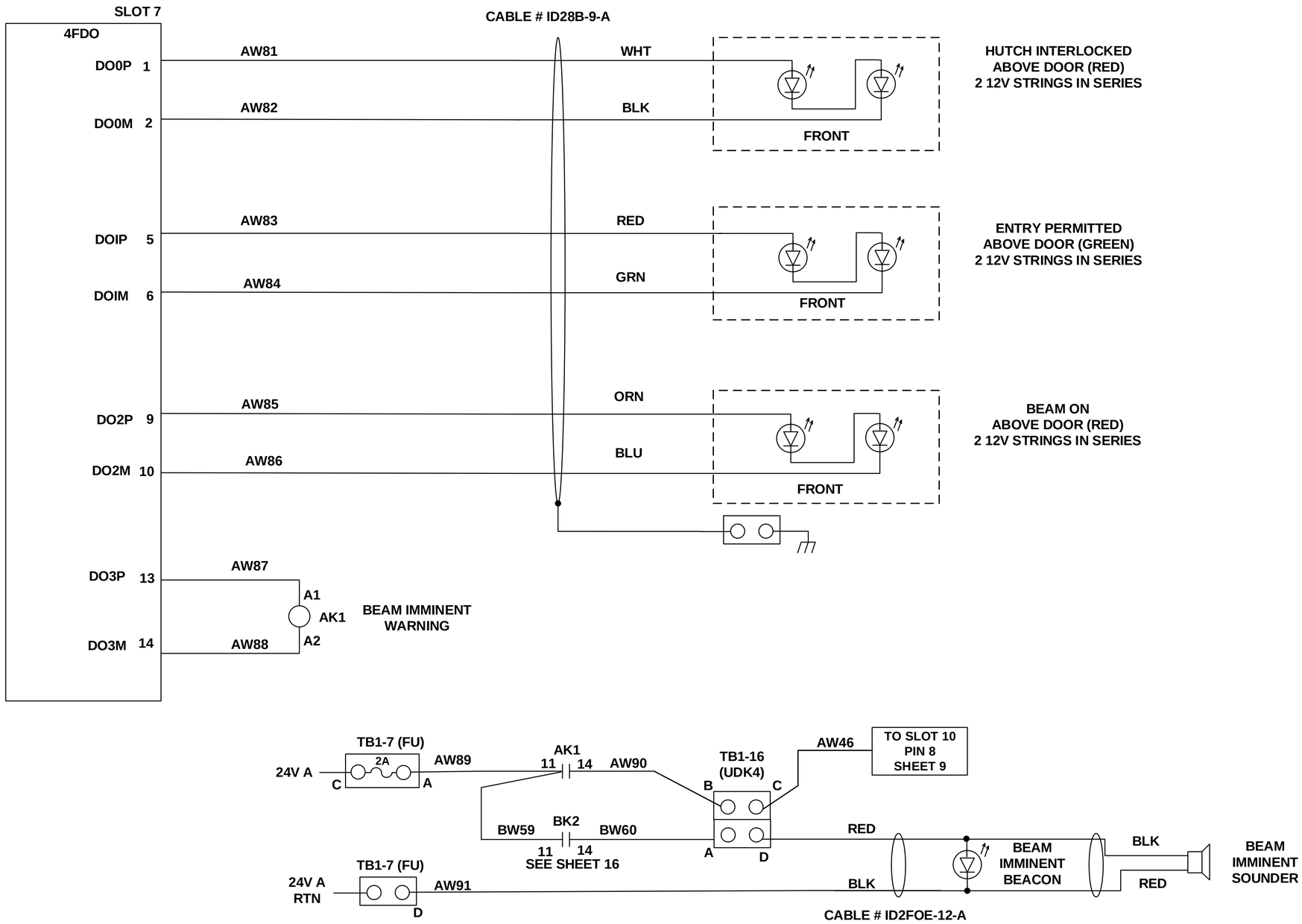

A

LT-EL-BL-EI	LT-EL-BL-EI-PPS-1280-95	A
DRAWING DIRECTORY	DRAWING NUMBER	REV

COMPUTER REPRODUCABLE | SCALE: N/A | SHEET 6 of 21

LT-EL-BL-EI-PPS-1280-95

REV	DESCRIPTION	DATE	BY	CHECKED	APP
	SEE SHEET 1				

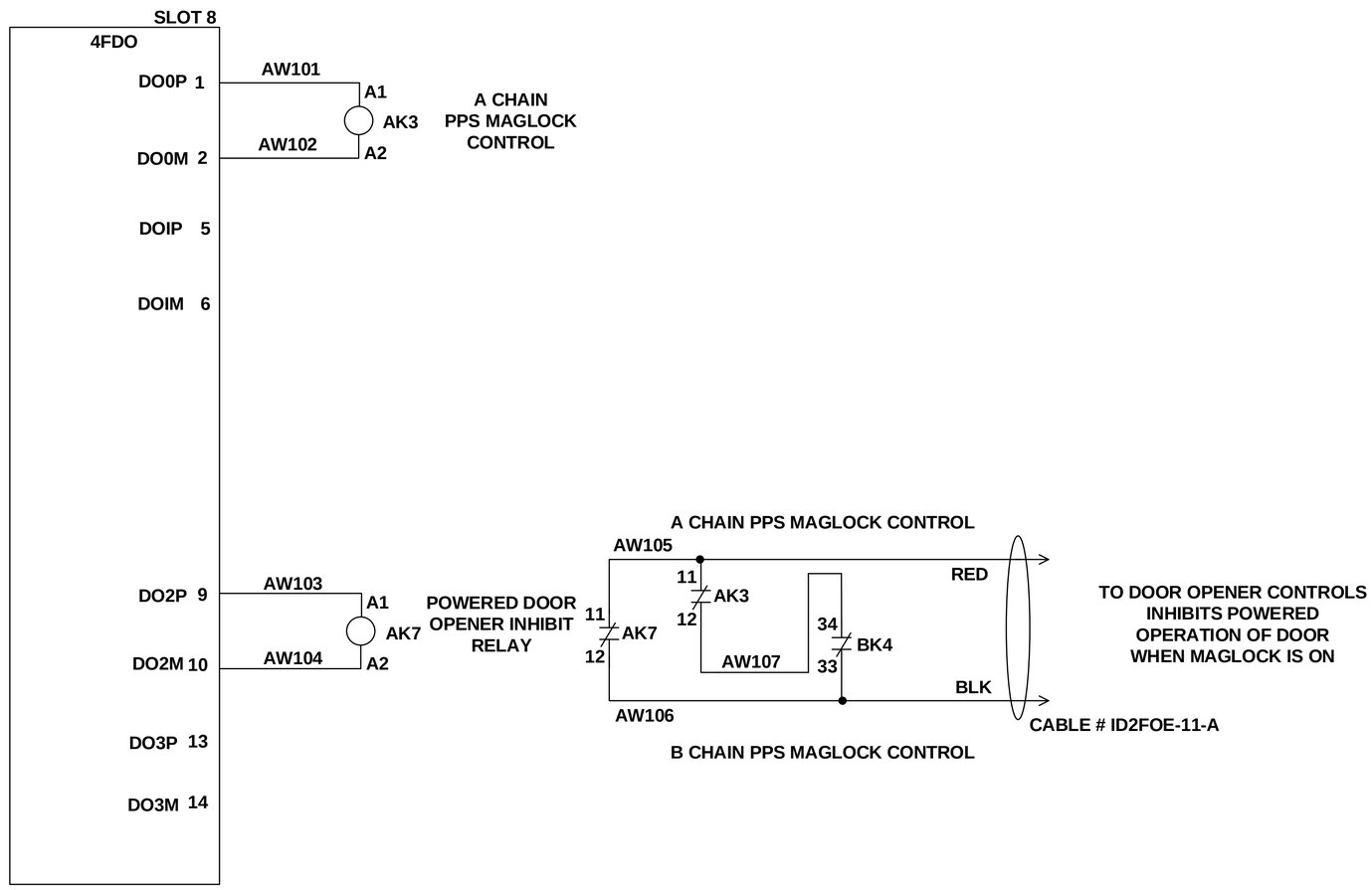

A

LT-EL-BL-EI (DRAWING DIRECTORY)	LT-EL-BL-EI-PPS-1280-95 (DRAWING NUMBER)	A (REV)
COMPUTER REPRODUCABLE	SCALE: N/A	SHEET 7 of 21

LT-EL-BL-EI-PPS-1280-95

REV	DESCRIPTION	DATE	BY	CHECKED	APP
	SEE SHEET 1				

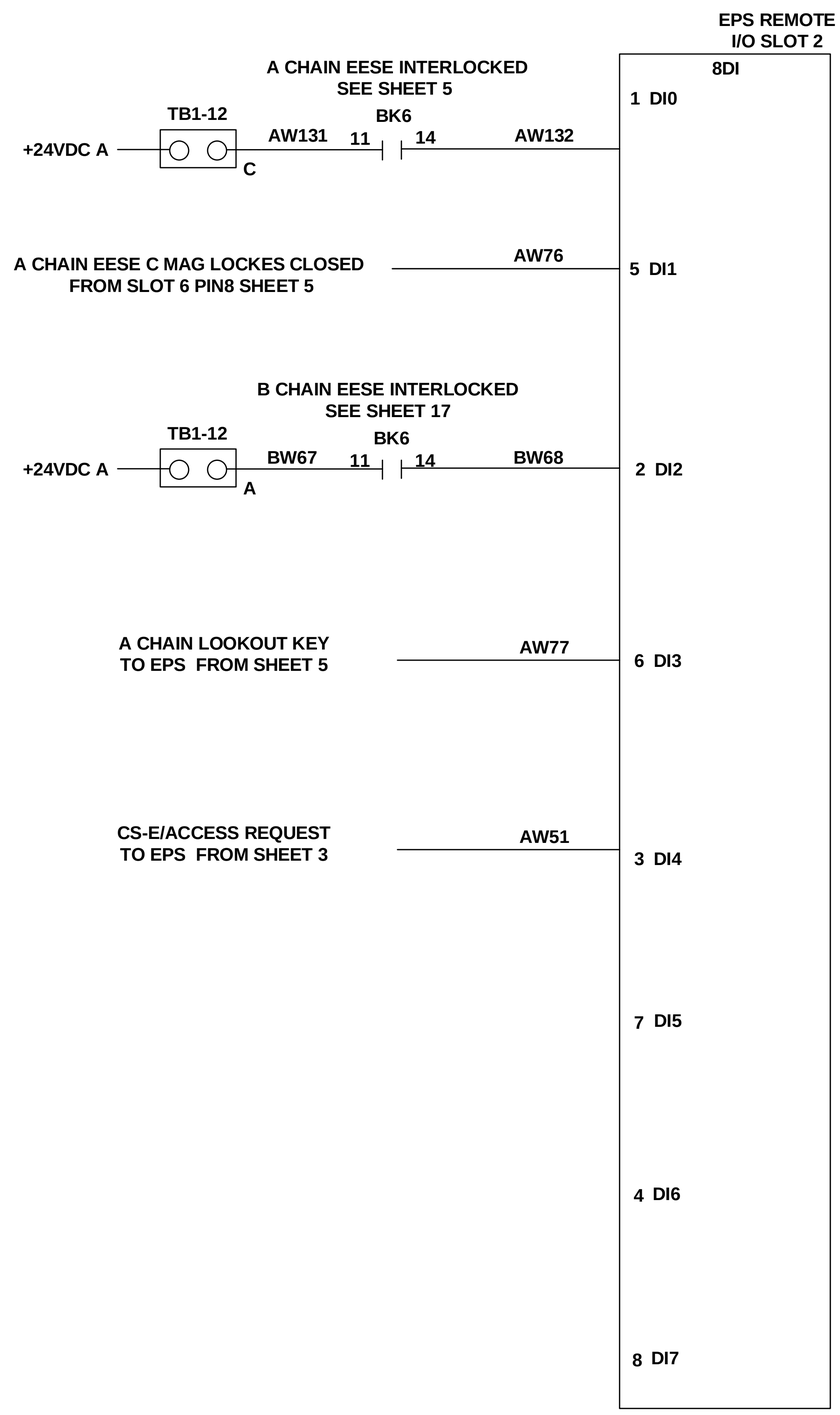

28-ID EESE C

A

LT-EL-BL-EI (DRAWING DIRECTORY)	LT-EL-BL-EI-PPS-1280-95 (DRAWING NUMBER)	A (REV)
COMPUTER REPRODUCABLE	SCALE: N/A	SHEET 8 of 21

LT-EL-BL-EI-PPS-1280-95

REV	DESCRIPTION	DATE	BY	CHECKED	APP
	SEE SHEET 1				

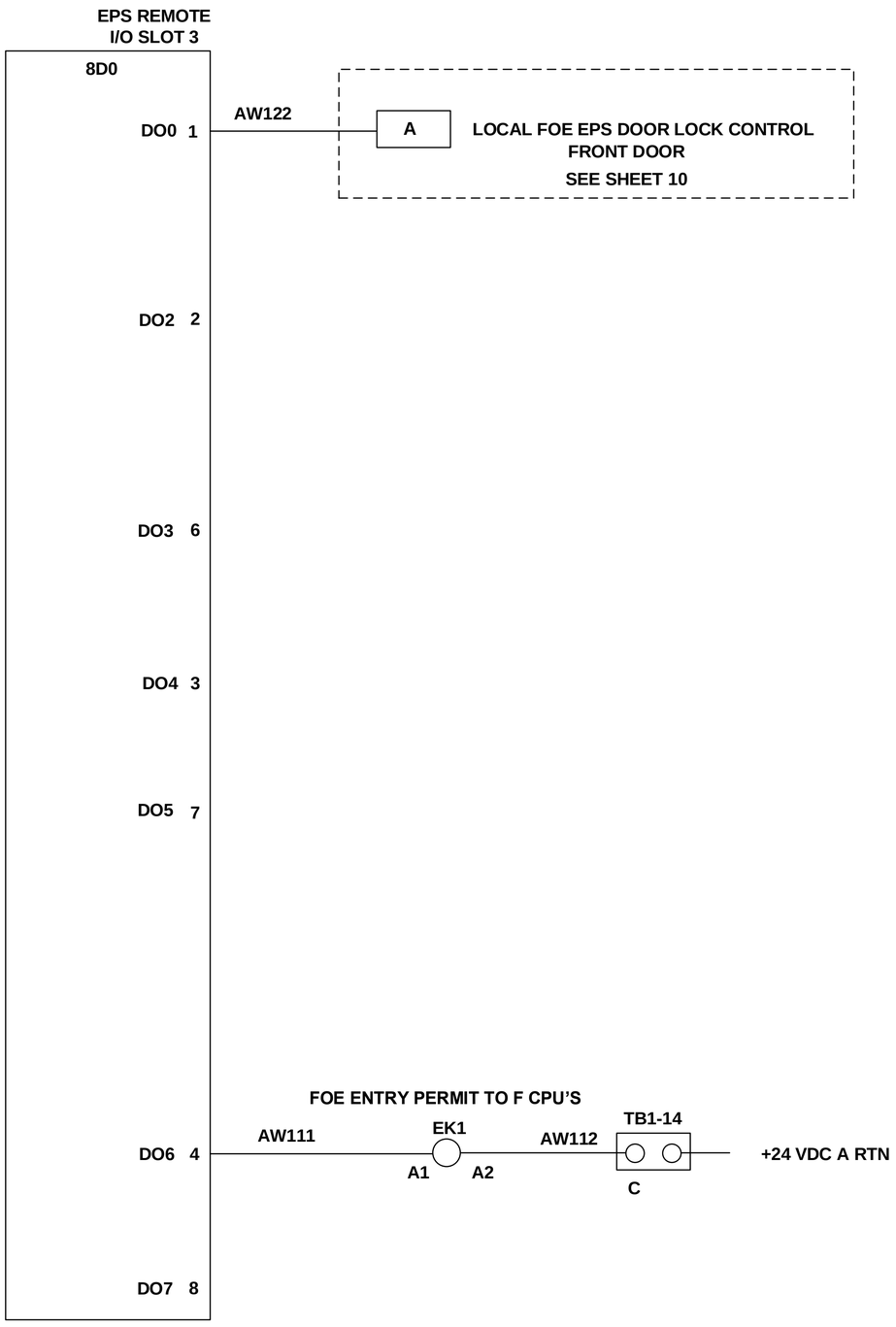

A

LT-EL-BL-EI	LT-EL-BL-EI-PPS-1280-95	A
DRAWING DIRECTORY	DRAWING NUMBER	REV

COMPUTER REPRODUCABLE | SCALE: N/A | SHEET 9 of 21

LT-EL-BL-EI-PPS-1280-95

REV	DESCRIPTION	DATE	BY	CHECKED	APP
	SEE SHEET 1				

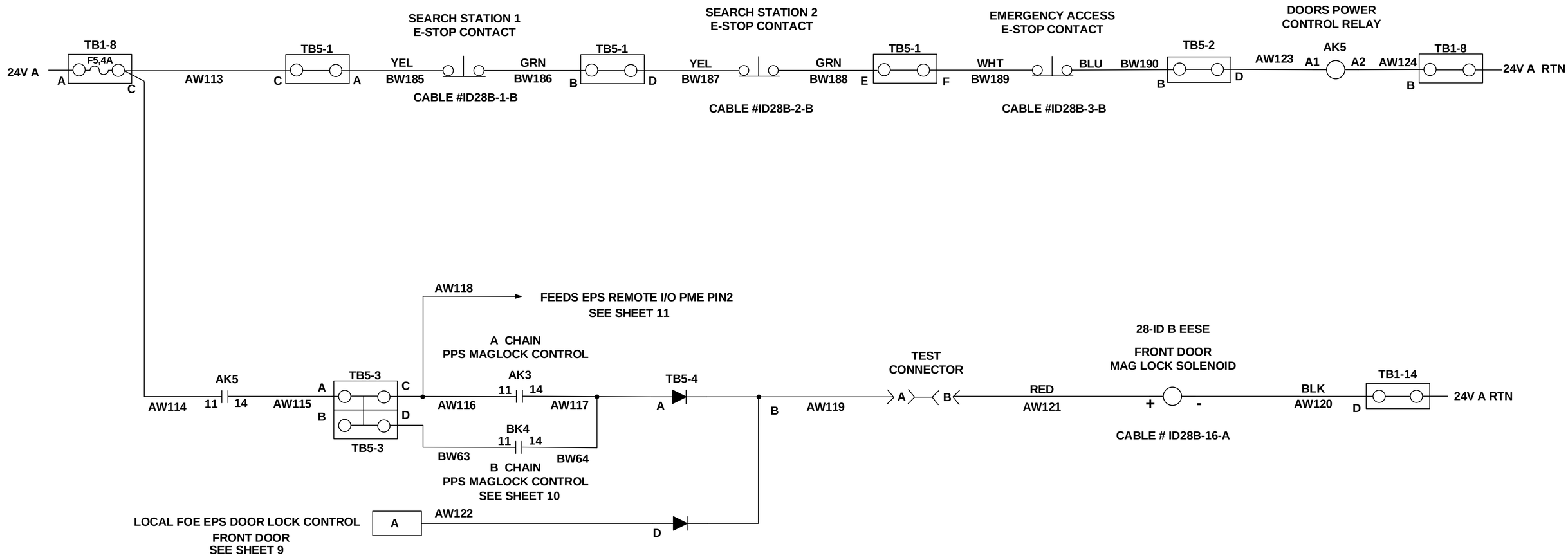

LT-EL-BL-EI	LT-EL-BL-EI-PPS-1280-95	A
DRAWING DIRECTORY	DRAWING NUMBER	REV

COMPUTER REPRODUCABLE | SCALE: N/A | SHEET 10 of 21

LT-EL-BL-EI-PPS-1280-95

REV	DESCRIPTION	DATE	BY	CHECKED	APP
	SEE SHEET 1				

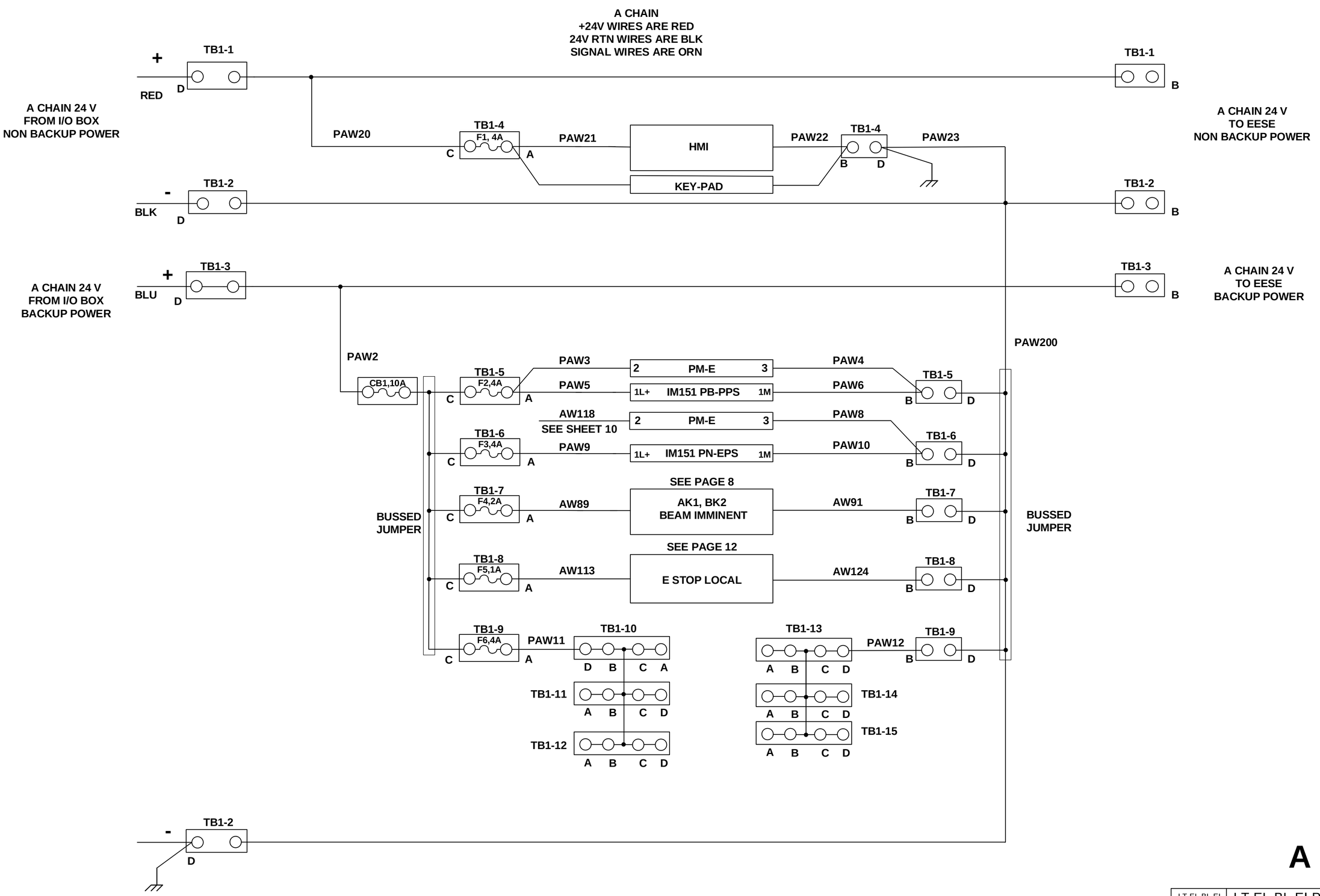

A

LT-EL-BL-EI	LT-EL-BL-EI-PPS-1280-95	A
DRAWING DIRECTORY	DRAWING NUMBER	REV
COMPUTER REPRODUCABLE	SCALE: N/A	SHEET 11 of 21

LT-EL-BL-EI-PPS-1280-95

REV	DESCRIPTION	DATE	BY	CHECKED	APP
	SEE SHEET 1				

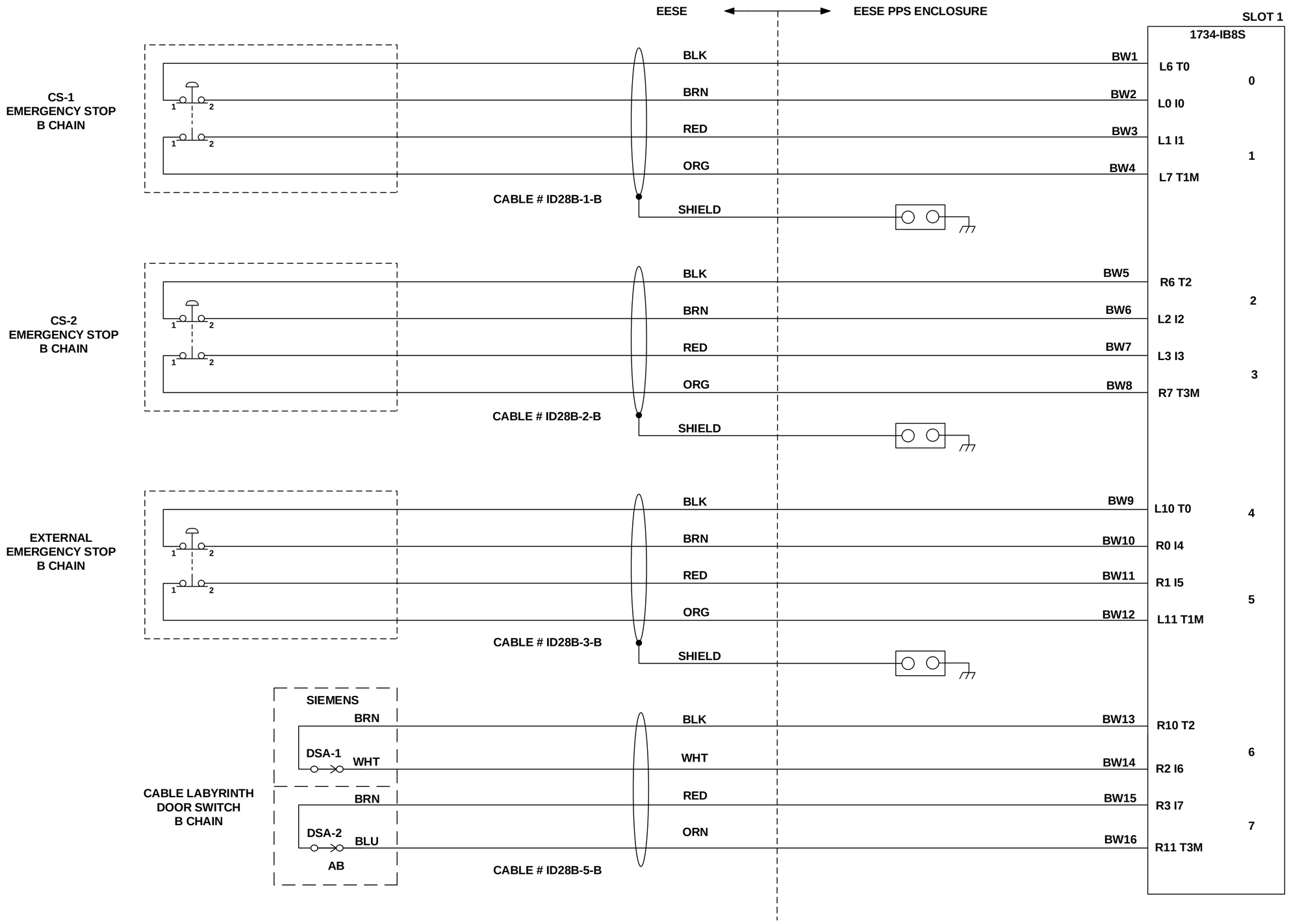

B

LT-EL-BL-EI (DRAWING DIRECTORY)	LT-EL-BL-EI-PPS-1280-95 (DRAWING NUMBER)	A (REV)
COMPUTER REPRODUCABLE	SCALE: N/A	SHEET 12 of 21

LT-EL-BL-EI-PPS-1280-95

REV	DESCRIPTION	DATE	BY	CHECKED	APP
	SEE SHEET 1				

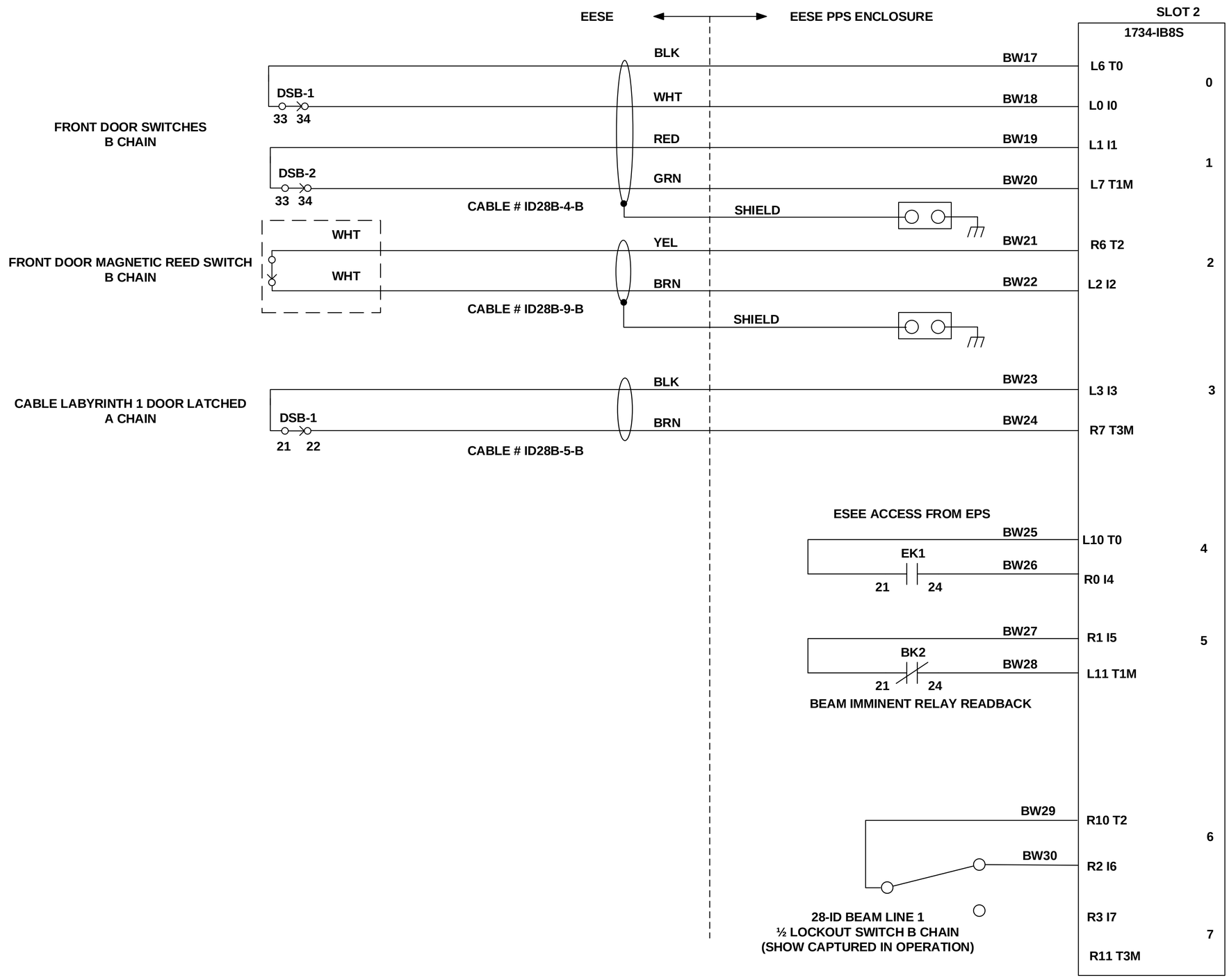

B

LT-EL-BL-EI (DRAWING DIRECTORY)	LT-EL-BL-EI-PPS-1280-95 (DRAWING NUMBER)	A (REV)
COMPUTER REPRODUCABLE	SCALE: N/A	SHEET 13 of 21

LT-EL-BL-EI-PPS-1280-95

REV	DESCRIPTION	DATE	BY	CHECKED	APP
	SEE SHEET 1				

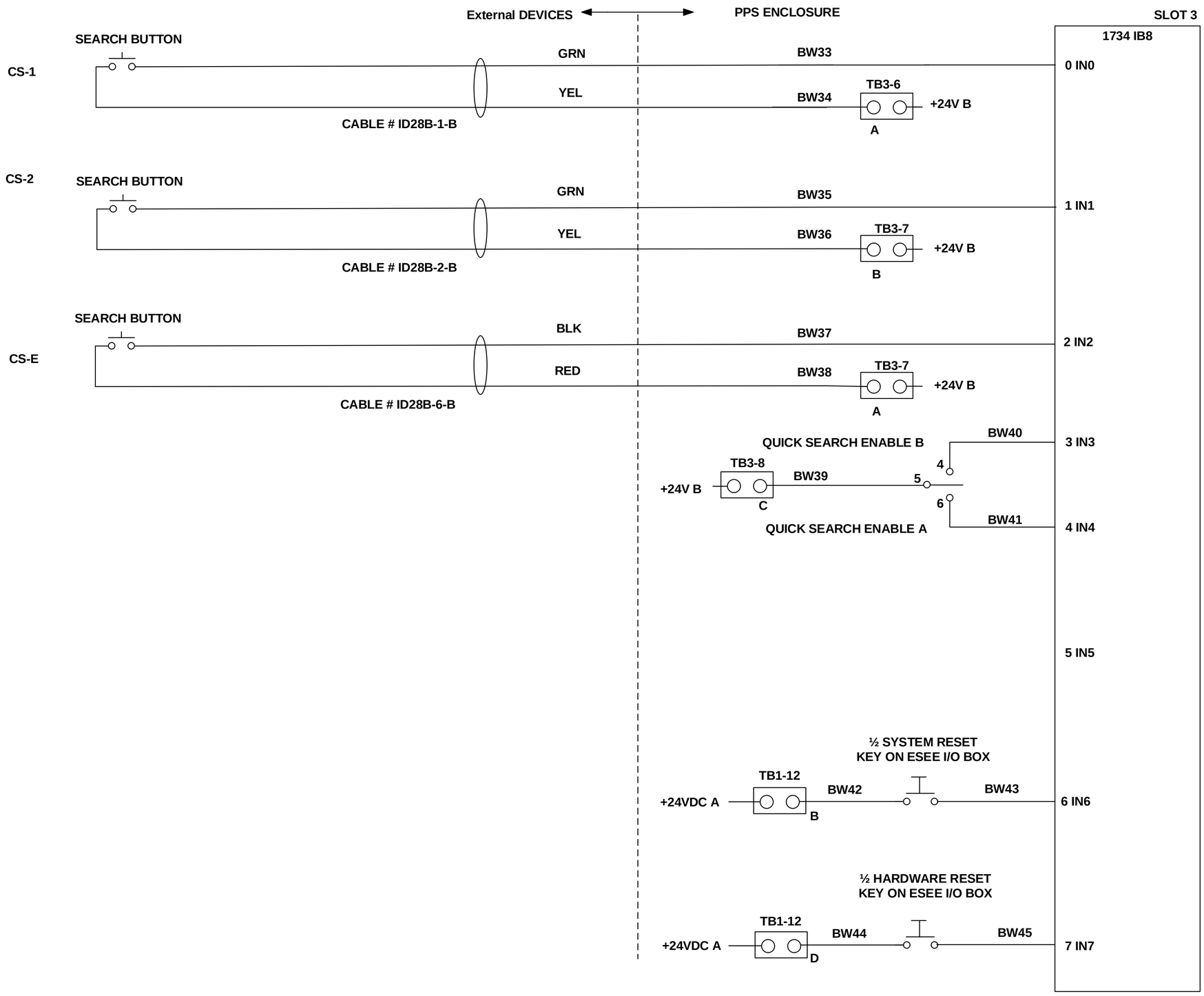

B

LT-EL-BL-EI (DRAWING DIRECTORY)	LT-EL-BL-EI-PPS-1280-95 (DRAWING NUMBER)	A (REV)
COMPUTER REPRODUCABLE	SCALE: N/A	SHEET 14 of 21

LT-EL-BL-EI-PPS-1280-95

REV	DESCRIPTION	DATE	BY	CHECKED	APP
	SEE SHEET 1				

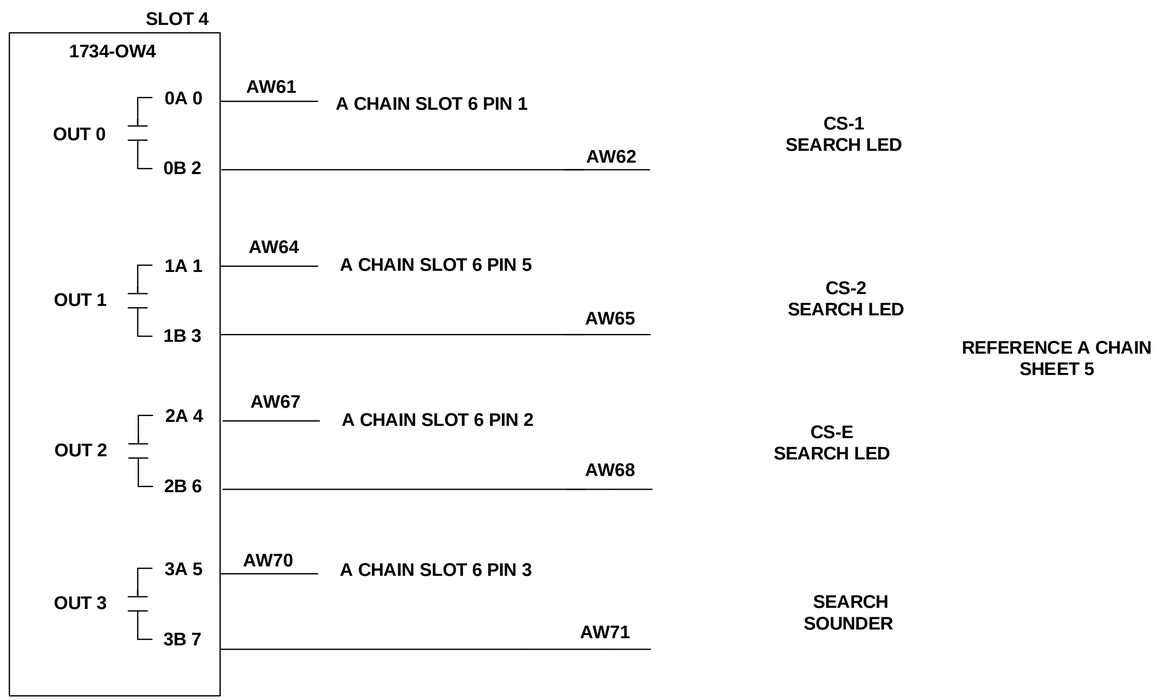

B

LT-EL-BL-EI (DRAWING DIRECTORY)	LT-EL-BL-EI-PPS-1280-95 (DRAWING NUMBER)	A (REV)
COMPUTER REPRODUCABLE	SCALE: N/A	SHEET 15 of 21

LT-EL-BL-EI-PPS-1280-95

REV	DESCRIPTION	DATE	BY	CHECKED	APP
	SEE SHEET 1				

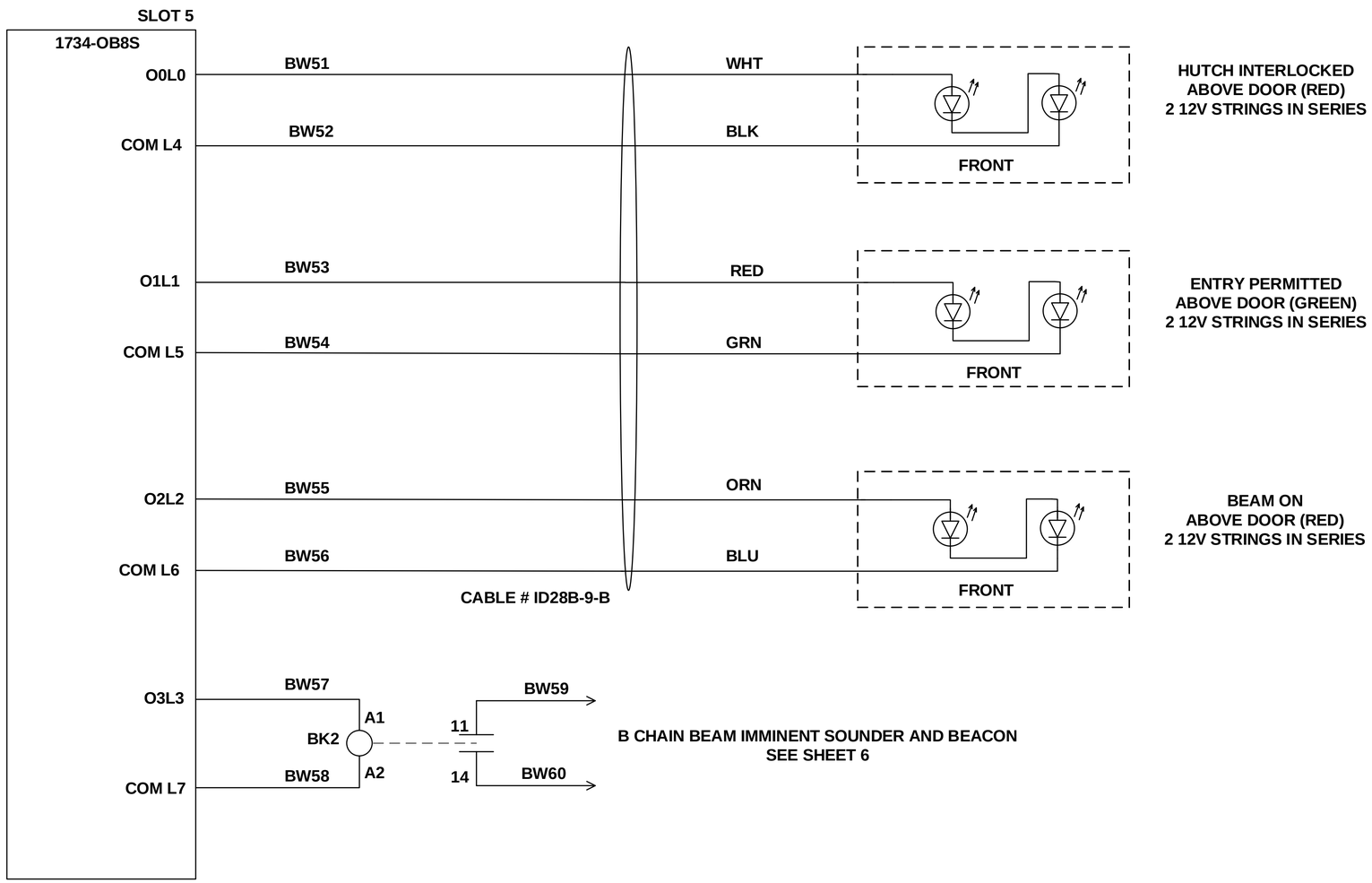

B

LT-EL-BL-EI (DRAWING DIRECTORY)	LT-EL-BL-EI-PPS-1280-95 (DRAWING NUMBER)	A (REV)
COMPUTER REPRODUCABLE	SCALE: N/A	SHEET 16 of 21

LT-EL-BL-EI-PPS-1280-95

REV	DESCRIPTION	DATE	BY	CHECKED	APP
	SEE SHEET 1				

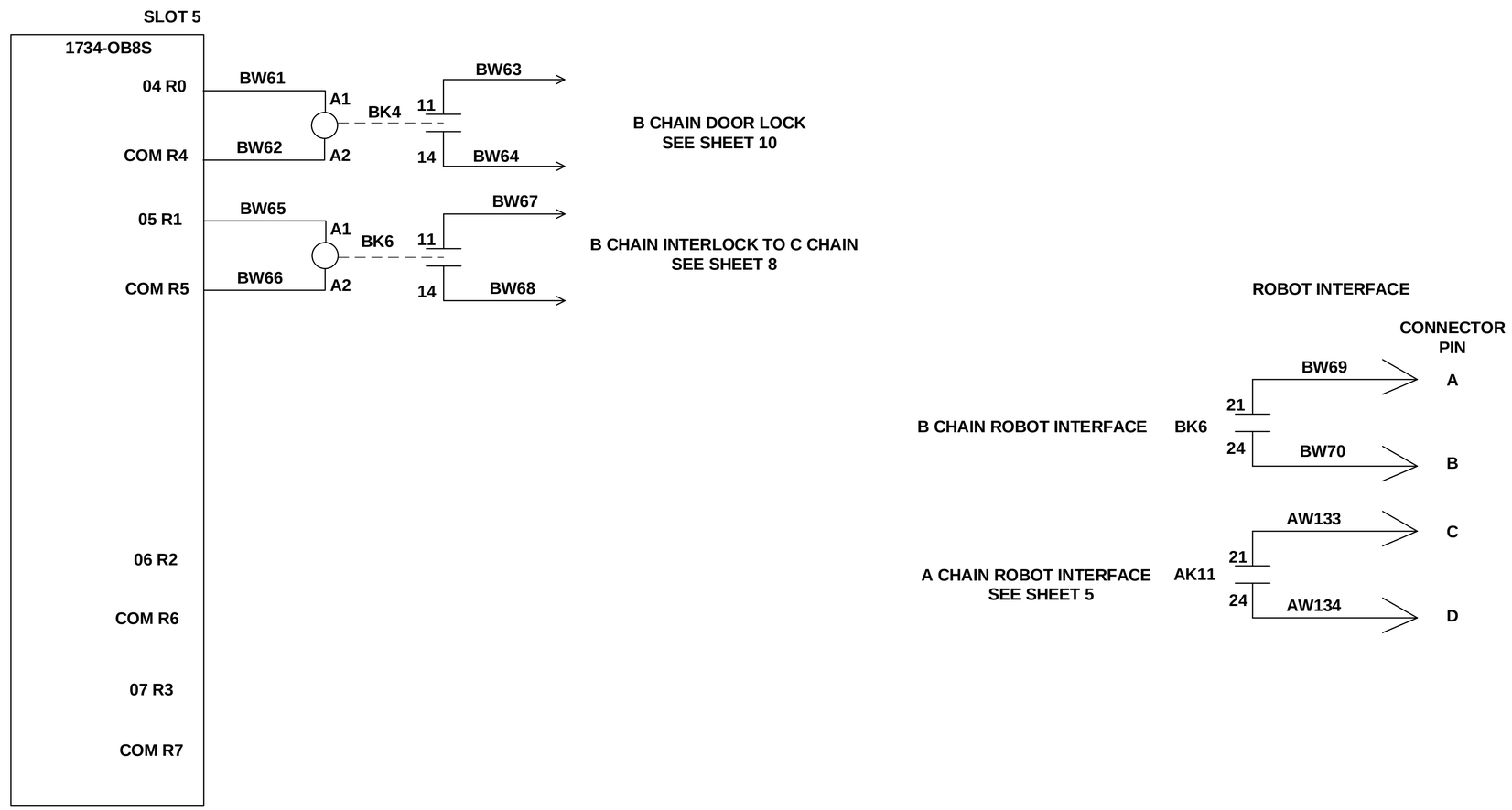

B

LT-EL-BL-EI (DRAWING DIRECTORY)	LT-EL-BL-EI-PPS-1280-95 (DRAWING NUMBER)	A (REV)
COMPUTER REPRODUCABLE	SCALE: N/A	SHEET 17 of 21

LT-EL-BL-EI-PPS-1280-95

REV	DESCRIPTION	DATE	BY	CHECKED	APP
	SEE SHEET 1				

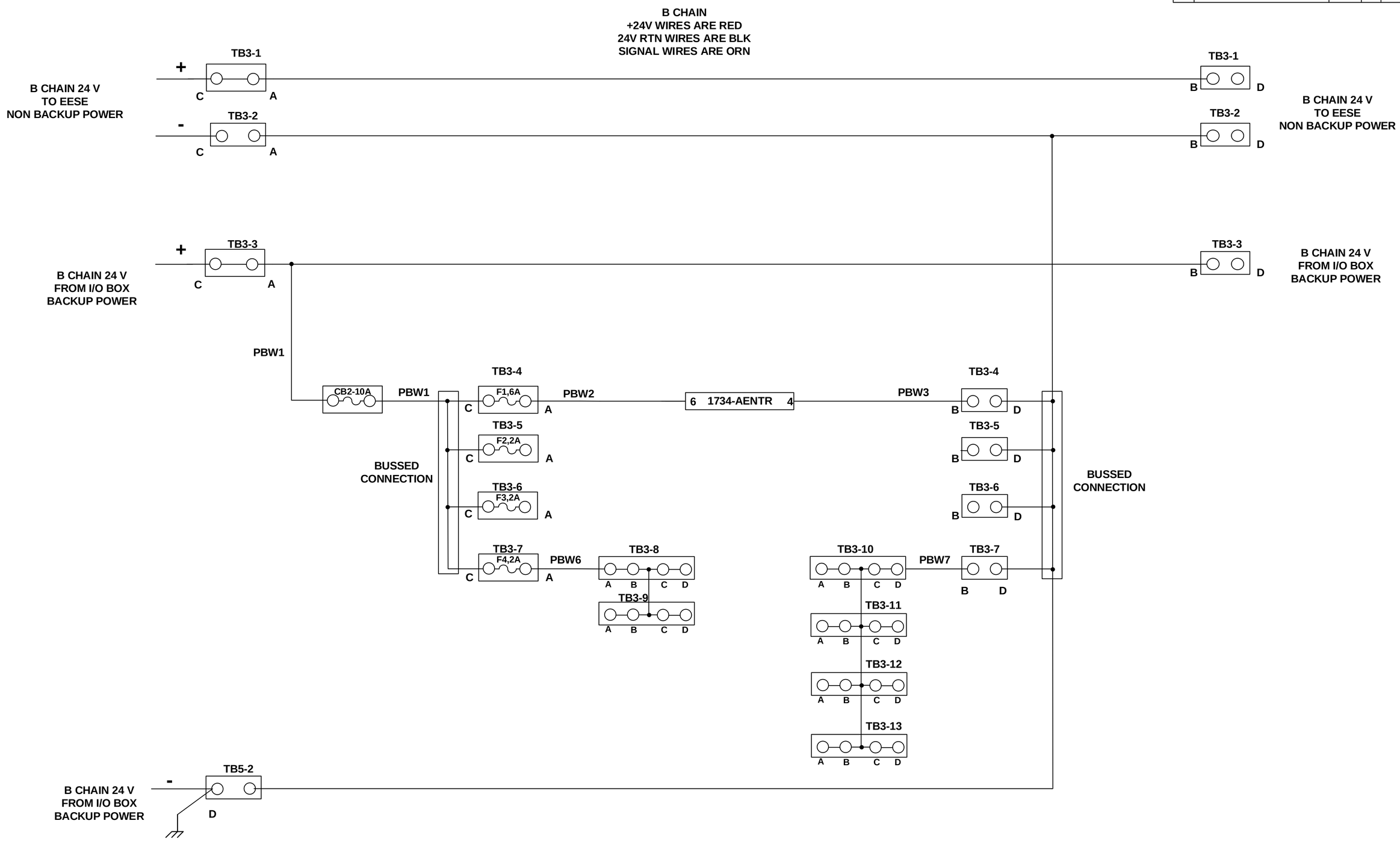

B

LT-EL-BL-EI (DRAWING DIRECTORY)	LT-EL-BL-EI-PPS-1280-95 (DRAWING NUMBER)	A (REV)
COMPUTER REPRODUCABLE	SCALE: N/A	SHEET 18 of 21

LT-EL-BL-EI-PPS-1280-95

REV	DESCRIPTION	DATE	BY	CHECKED	APP
	SEE SHEET 1				

28-ID B Cable list

CABLE Num.	CHAIN	From LOCATION	To LOCATION	CONDUCTORS Needed
ID28C-1-A	A	C	CS1&Emergency stop	8
ID28C-1-B	B	C	CS1&Emergency stop	8
ID28C-2-A	A	C	CS2&Emergency stop	8
ID28C-2-B	B	C	CS2&Emergency stop	8
ID28C-3-A	A	C	Emergency Entrance E-Stop	8
ID28C-3-B	B	C	Emergency Entrance E-Stop	8
ID28C-4-A	A	C	FRONT DOOR Switches	8
ID28C-4-B	B	C	FRONT DOOR Switches	8
ID28C-5-A	A	C	Cable Labyrinth1 Door Latch A Chain (6 Conductors)	6
ID28C-5-B	B	C	Cable Labyrinth1 Door Latch B Chain (6 Conductors)	6
ID28C-6-A	A	C	CS-E Search button A	4
ID28C-6-B	B	C	CS-E Search button B	2
ID28C-7-A	A	C	Search Sounder&Beacon	2
ID28C-7-B	B	C	SPARE	
ID28C-8-A	A	C	OverHead Light drop	2
ID28C-8-B	B	C	SPARE	
ID28C-9-A	A	C	FRONT DOOR A Chain Interlock, Entry Permit, Beam lights	6
ID28C-9-B	B	C	FRONT DOOR B Chain Interlock, Entry Permit, Beam lights	6
ID28C-10-A	A	C	FRONT DOOR MagLOCK Coil	2
ID28C-10-B	B	C	SPARE	
ID28C-11-A	A	C	Door Inhibit Relay	2
ID28C-11-B	B	C	SPARE	
ID28C-12-A	A	C	Beam Imminent beacon&Sounder	2
ID28C-12-B	B	C	SPARE	

8

LT-EL-BL-EI-PPS-1280-95

LT-EL-BL-EI (DRAWING DIRECTORY)	LT-EL-BL-EI-PPS-1280-95 (DRAWING NUMBER)	A (REV)
COMPUTER REPRODUCABLE	SCALE: N/A	SHEET 19 OF 21

REV	DESCRIPTION	DATE	BY	CHECKED	APP
	SEE SHEET 1				

28-ID B

A CHAIN

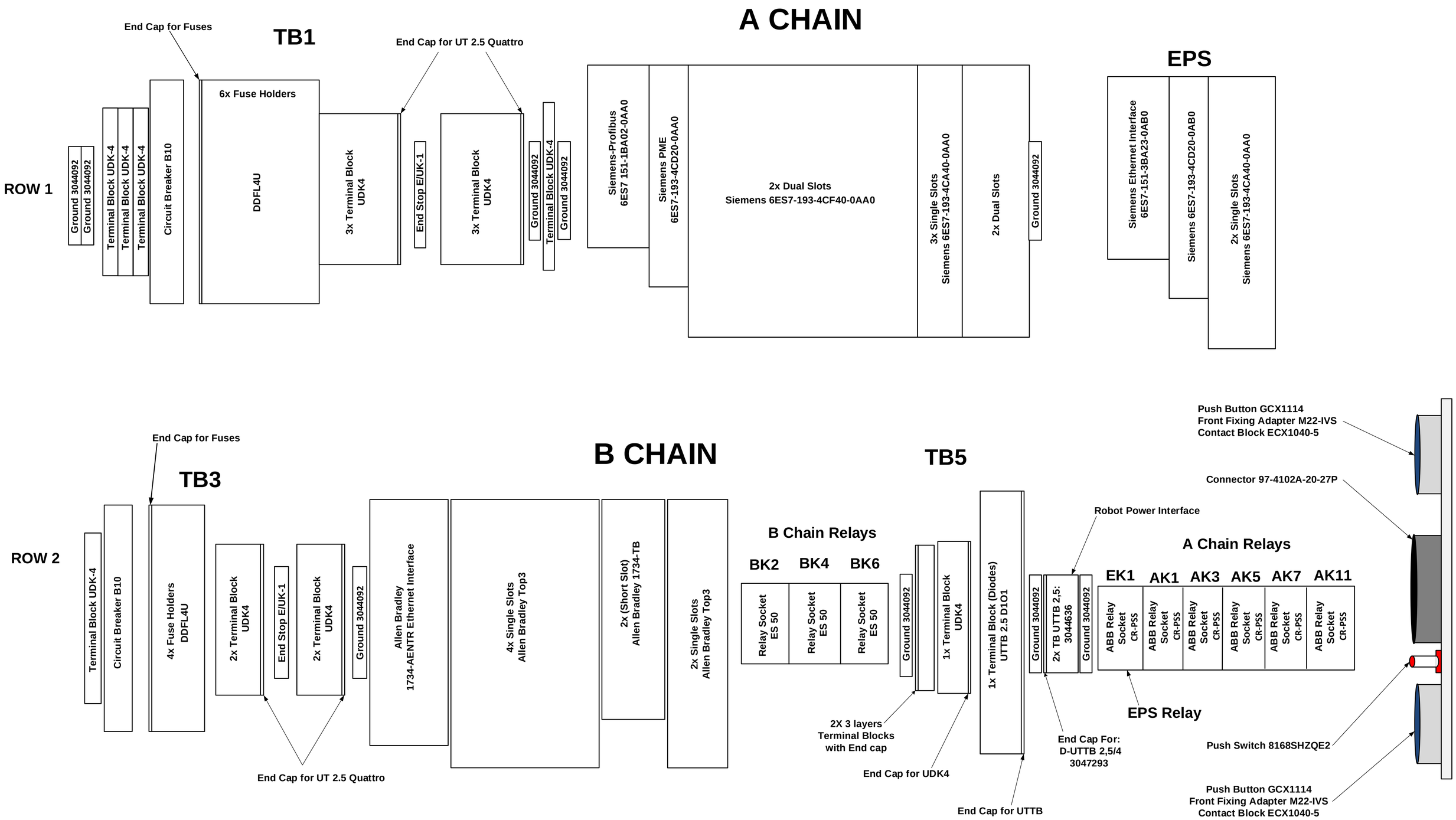

LT-EL-BL-EI (DRAWING DIRECTORY)	LT-EL-BL-EI-PPS-1280-95 (DRAWING NUMBER)	A (REV)
COMPUTER REPRODUCABLE	SCALE: N/A	SHEET 20 of 21

LT-EL-BL-EI-PPS-1280-95

REV	DESCRIPTION	DATE	BY	CHECKED	APP
	SEE SHEET 1				

A CHAIN				
ROW 1:				
TB1				
CB1	WMZS1B10	N/A	Circuit Breaker B10	Eaton
SLOT	MODULE	SOCKET	DESCRIPTION	VENDOR
	6ES7-151-1BA02-0AA0	N/A	PROFI-BUS	SIEMENS
1	6ES7-4CA50-0AB0	6ES7-193-4CD20-0AA0	POWER MODULE-PME	SIEMENS
2	6ES7-138-4FA04-0AB0	6ES7-193-4CF40-0AA0	4/8 FDI 8 SAFE IN	SIEMENS
3	6ES7-138-4FA04-0AB0	6ES7-193-4CF40-0AA0	4/8 FDI 8 SAFE IN	SIEMENS
4	6ES7-131-4BF00-0AB0	6ES7-193-4CA40-0AA0	8DI STANDARD IN	SIEMENS
5	6ES7-131-4BF00-0AB0	6ES7-193-4CA40-0AA0	8DI STANDARD IN	SIEMENS
6	6ES7-132-4BF00-0AA0	6ES7-193-4CA40-0AA0	8DO	SIEMENS
7	6ES7-138-4FB03-0AB0	6ES7-193-4CF40-0AA0	4FD0 SAFE OUT	SIEMENS
8	6ES7-138-4FB03-0AB0	6ES7-193-4CF40-0AA0	4FD0 SAFE OUT	SIEMENS
EPS				
	6ES7-151-3BA23-0AB0	N/A	EHTERNET INTERFACE	SIEMENS
1	6ES7-4CA50-0AB0	6ES7-193-4CD20-0AB0	POWER MODULE-PME	SIEMENS
2	6ES7-131-4BF00-0AB0	6ES7-193-4CA40-0AA0	8DI STANDARD IN	SIEMENS
3	6ES7-132-4BF00-0AA0	6ES7-193-4CA40-0AA0	8DO	SIEMENS
B CHAIN				
ROW 2:				
TB3				
CB3	WMZS1B10	N/A	Circuit Breaker B10	Eaton
SLOT	MODULE	SOCKET (QTY)	DESCRIPTION	VENDOR
	1734 AENTR	N/A	EHTERNET INTERFACE	AB
1	1734-IB8S	1734 TOP3 (2)	AB INPUT SAFETY IN	AB
2	1734-IB8S	1734 TOP3 (2)	AB INPUT SAFETY IN	AB
3	1734-IB8	1734 TOP3 (1)	AB INPUT SAFETY IN	AB
4	1734-OW4	1734 TOP3 (1)	AB INPUT SAFETY IN	AB
5	1734-OB8S	1734 TOP3 (2)	AB INPUT SAFETY IN	AB
BK2	SRG282Z	RT 78626	RELAY	SHRACK
BK4	SRG282Z	RT 78626	RELAY	SHRACK
BK6	SRG282Z	RT 78626	RELAY	SHRACK
TB5				
EK1	RF1V-3A1BL-D24	SF1V-4-07L	RELAY SOCKET	IDEC
AK1	OW5669.12/983/61	CR-PSS	RELAY	ABB
AK3	OW5669.12/983/61	CR-PSS	RELAY	ABB
AK5	OW5669.12/983/61	CR-PSS	RELAY	ABB
AK7	OW5669.12/983/61	CR-PSS	RELAY	ABB
AK11	OW5669.12/983/61	CR-PSS	RELAY	ABB

REV	DESCRIPTION	DATE	BY	CHECKED	APP
A	INITIAL RELEASE	09/05/2014	SEJ	JM	SB
B	REVISED PER ECN LT-ECN-015-1103	12/22/2014	SEJ	JM	SB
C	REVISED PER ECN LT-ECN-015-1275	08/24/2015	SEJ	JM	SB
D	REVISED PER ECN LT-ECN-018-1874	02/05/2018	SEJ	JM	SB

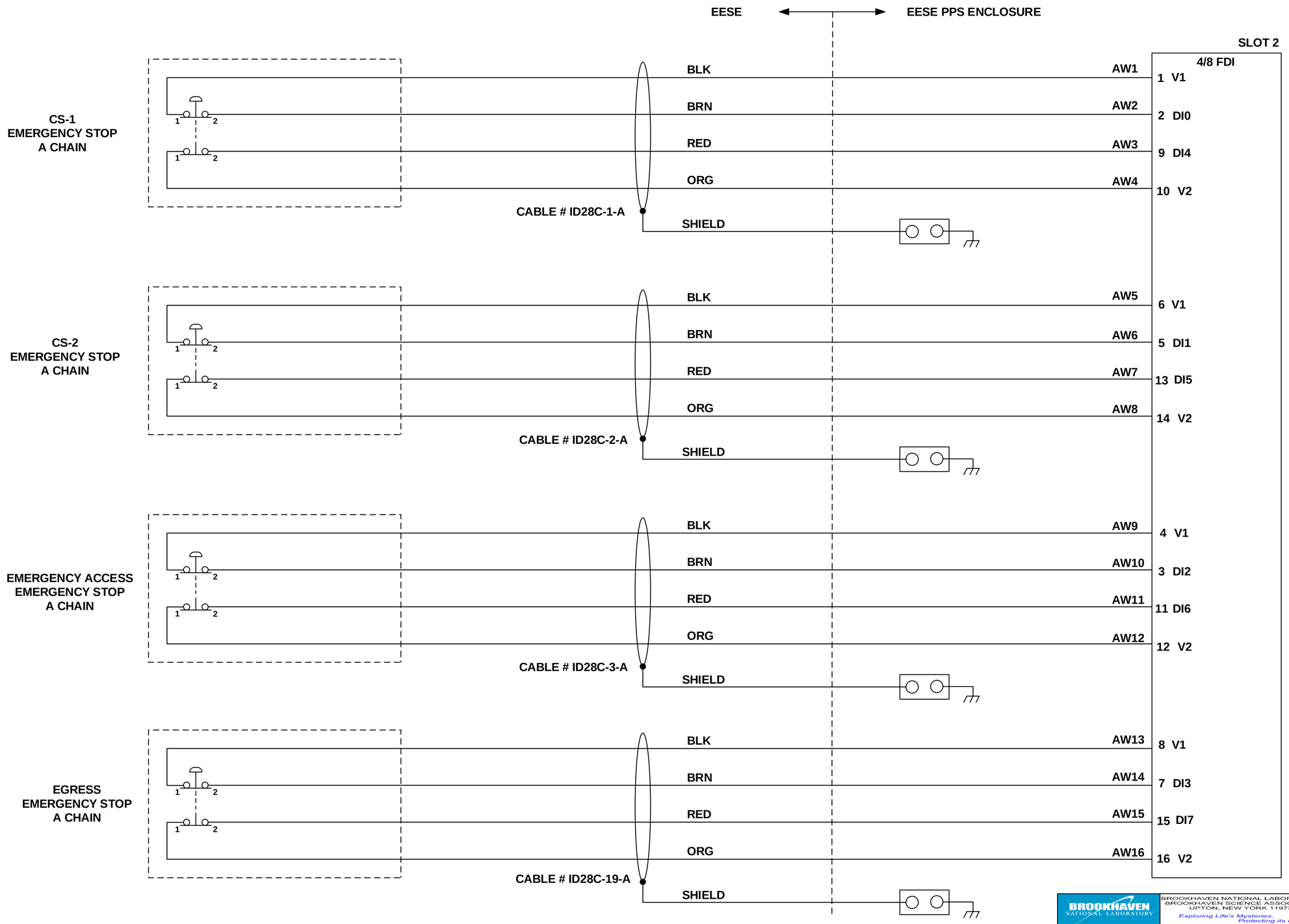

A

LT-EL-BL-EI-PPS-1280-93

BROOKHAVEN NATIONAL LABORATORY

BROOKHAVEN NATIONAL LABORATORY
BROOKHAVEN SCIENCE ASSOCIATES
UPTON, NEW YORK 11973
Exploring Life's Mysteries, Protecting its Future

NSLS II NATIONAL SYNCHROTRON LIGHT SOURCE II

UNLESS OTHERWISE SPECIFIED
INTEGER TOLERANCES ± .06
DECIMAL TOLERANCES
.X ± .030
.XX ± .015
.XXX ± .010
ANGULAR TOLERANCE ± 0.5°
UNSPECIFIED RADII .02 MAX
125 FINISH — BREAK SHARP CORNERS AND EDGES MAX .03 MIN .005

UNLESS OTHERWISE SPECIFIED DIMENSIONS ARE IN INCHES DIMENSIONS IN [*.**] ARE MILLIMETERS EQUIV. FOR REF. ONLY

ESH&Q RISK LEVEL A-1

INTERPRET DRAWING AS PER ANSI Y14.5 OR Y32.2

		DATE	OUTSTANDING ECN'S
DRWN BY	S. JARZABKOWSKI	09/05/2014	
CHK BY	J.MALLEY	09/05/2014	
ENG APP	S. BUDA	09/05/2014	
SUPV APP	G. GANETIS	09/08/2014	
QA APP	E.CHESWICK	09/05/2014	
ESH APP	R. LEE	09/05/2014	

WIRING DIAGRAM, 28-ID-C (XPD-C) A CHAIN AND B CHAIN

LT-EL-BL-EI — DRAWING DIRECTORY

LT-EL-BL-EI-PPS-1280-93 — DRAWING NUMBER

D — REV

COMPUTER REPRODUCABLE

SCALE: N/A

SHEET 1 OF 27

JOB NUMBER | USED ON DWG. NO.

REV	DESCRIPTION	DATE	BY	CHECKED	APP
	SEE SHEET 1				

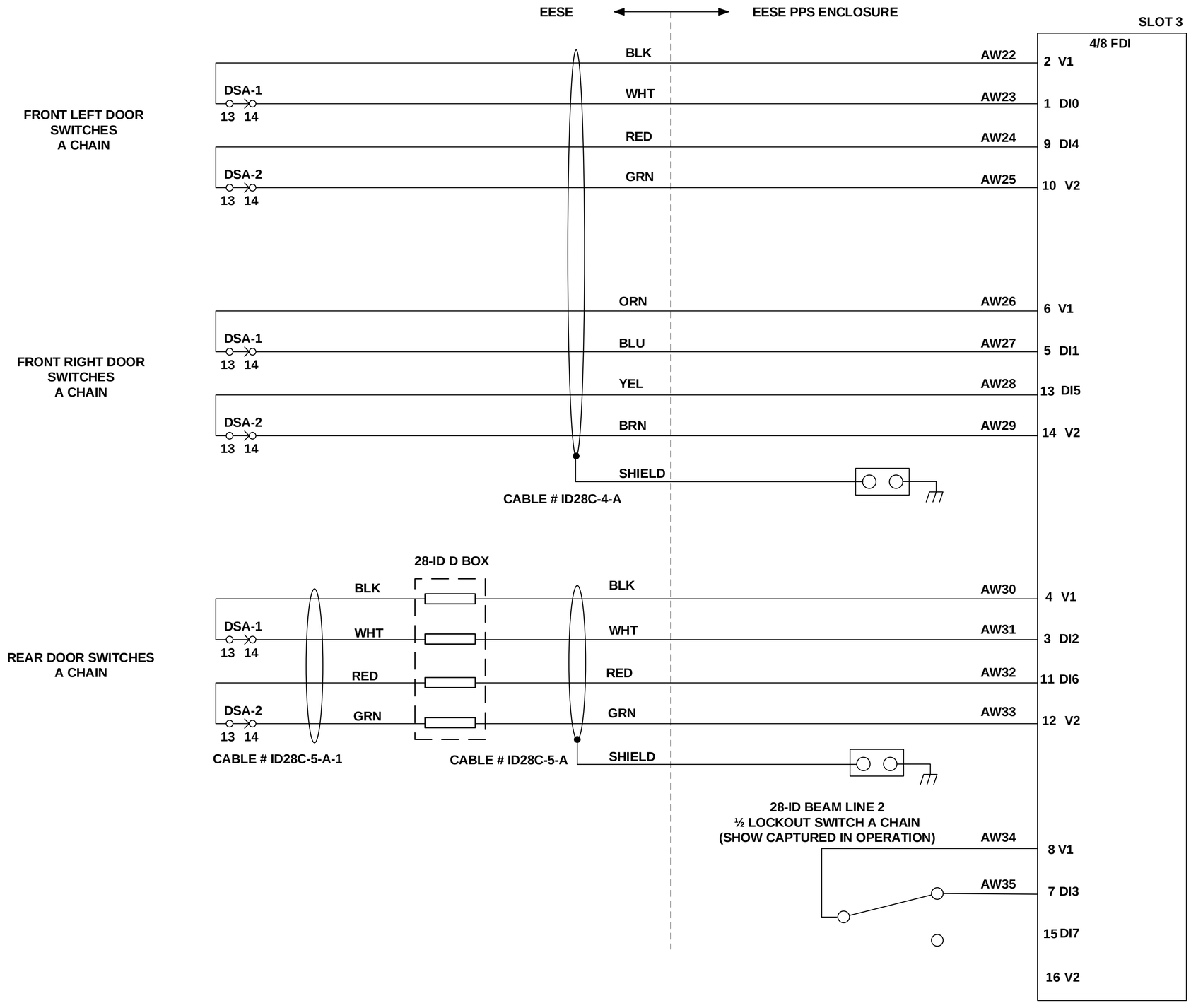

A

LT-EL-BL-EI (DRAWING DIRECTORY)	LT-EL-BL-EI-PPS-1280-93 (DRAWING NUMBER)	D (REV)
COMPUTER REPRODUCABLE	SCALE: N/A	SHEET 2 OF 27

LT-EL-BL-EI-PPS-1280-93

REV	DESCRIPTION	DATE	BY	CHECKED	APP
	SEE SHEET 1				

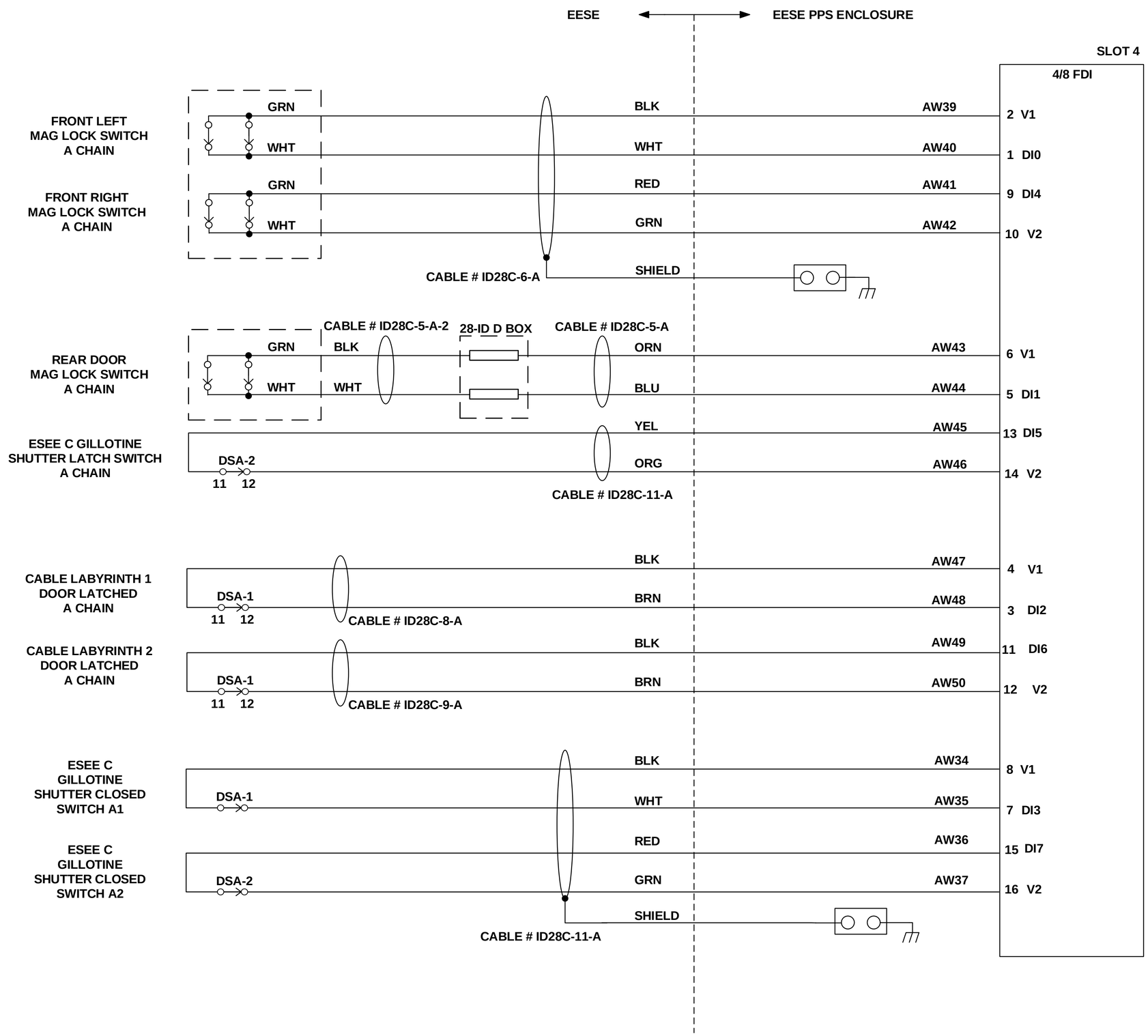

A

LT-EL-BL-EI (DRAWING DIRECTORY)	LT-EL-BL-EI-PPS-1280-93 (DRAWING NUMBER)	D (REV)
COMPUTER REPRODUCABLE	SCALE: N/A	SHEET 3 OF 27

LT-EL-BL-EI-PPS-1280-93

REV	DESCRIPTION	DATE	BY	CHECKED	APP
	SEE SHEET 1				

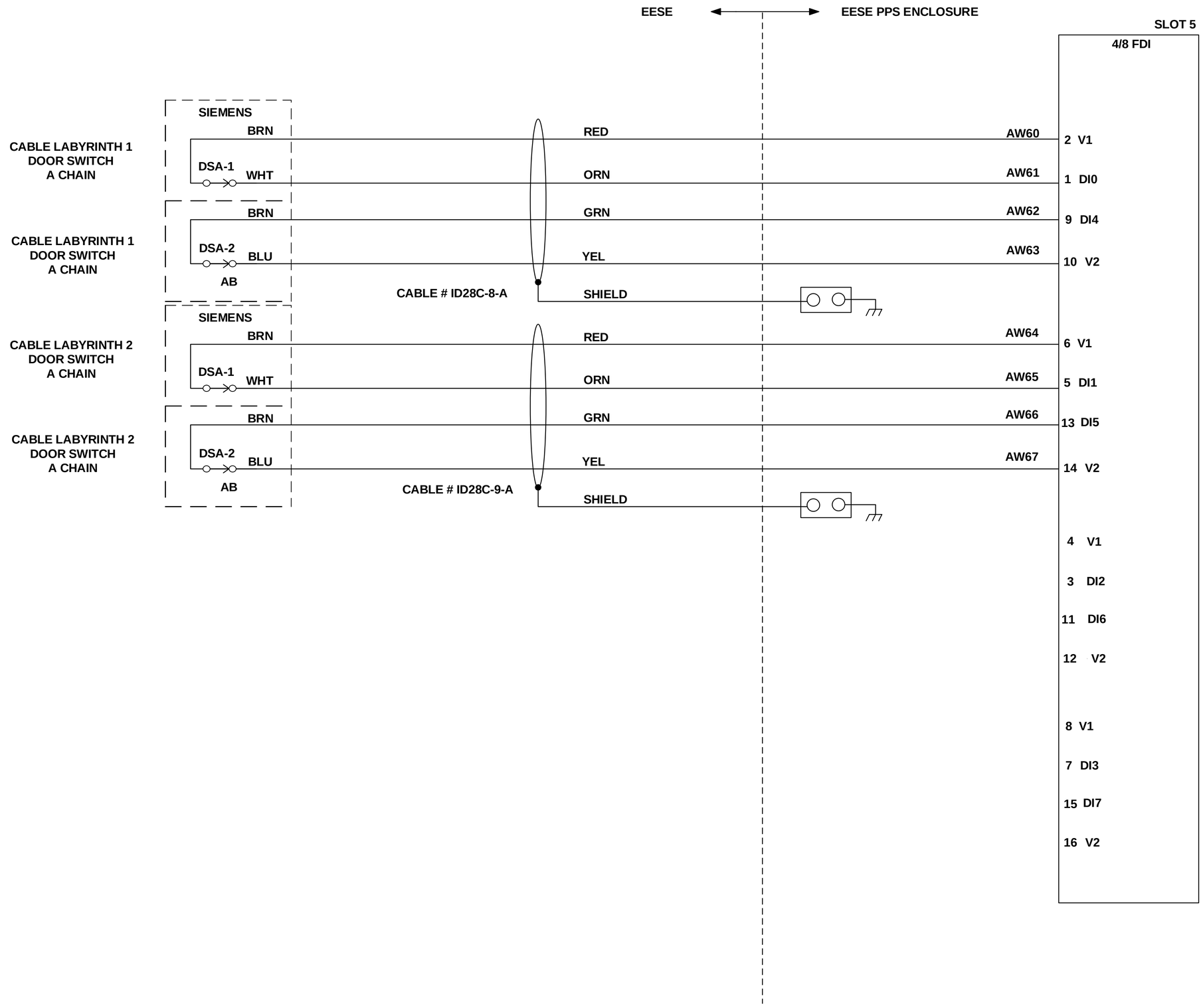

A

LT-EL-BL-EI	LT-EL-BL-EI-PPS-1280-93	D
DRAWING DIRECTORY	DRAWING NUMBER	REV

COMPUTER REPRODUCABLE | SCALE: N/A | SHEET 4 OF 27

LT-EL-BL-EI-PPS-1280-93

REV	DESCRIPTION	DATE	BY	CHECKED	APP
	SEE SHEET 1				

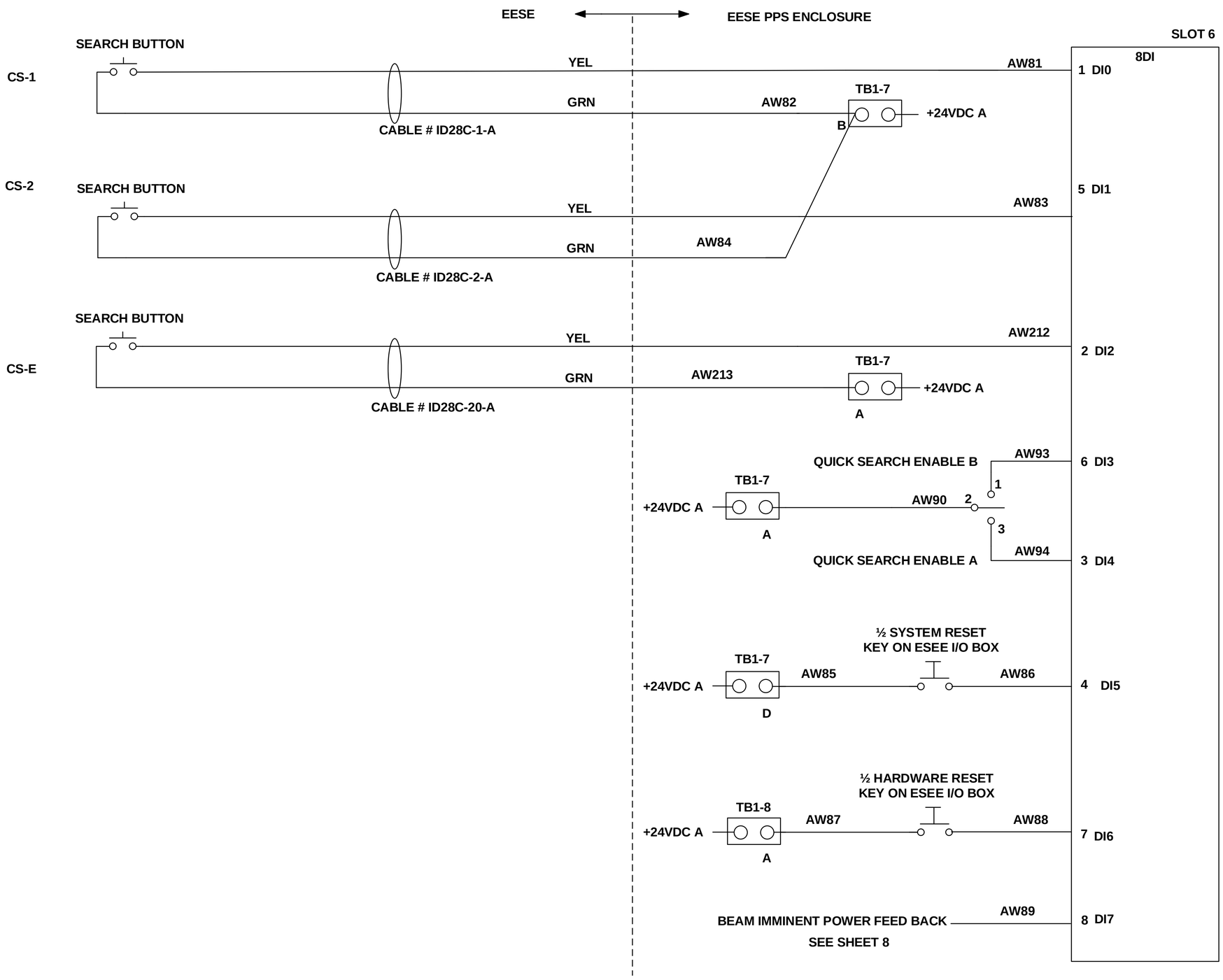

A

LT-EL-BL-EI DRAWING DIRECTORY	LT-EL-BL-EI-PPS-1280-93 DRAWING NUMBER	D REV
COMPUTER REPRODUCABLE	SCALE: N/A	SHEET 5 OF 27

LT-EL-BL-EI-PPS-1280-93

REV	DESCRIPTION	DATE	BY	CHECKED	APP
	SEE SHEET 1				

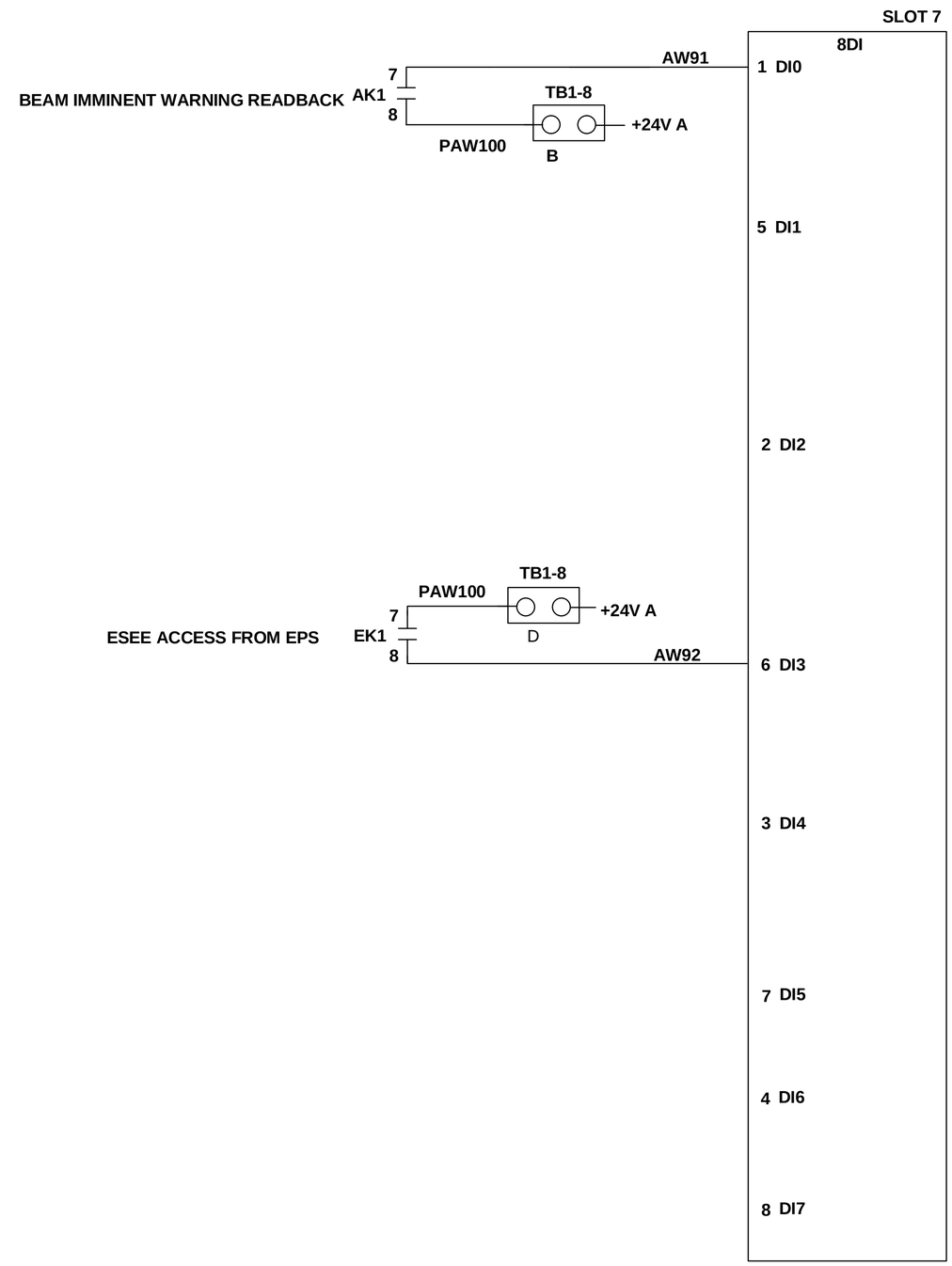

A

LT-EL-BL-EI	LT-EL-BL-EI-PPS-1280-93	D
DRAWING DIRECTORY	DRAWING NUMBER	REV

COMPUTER REPRODUCABLE | SCALE: N/A | SHEET 6 OF 27

LT-EL-BL-EI-PPS-1280-93

REV	DESCRIPTION	DATE	BY	CHECKED	APP
	SEE SHEET 1				

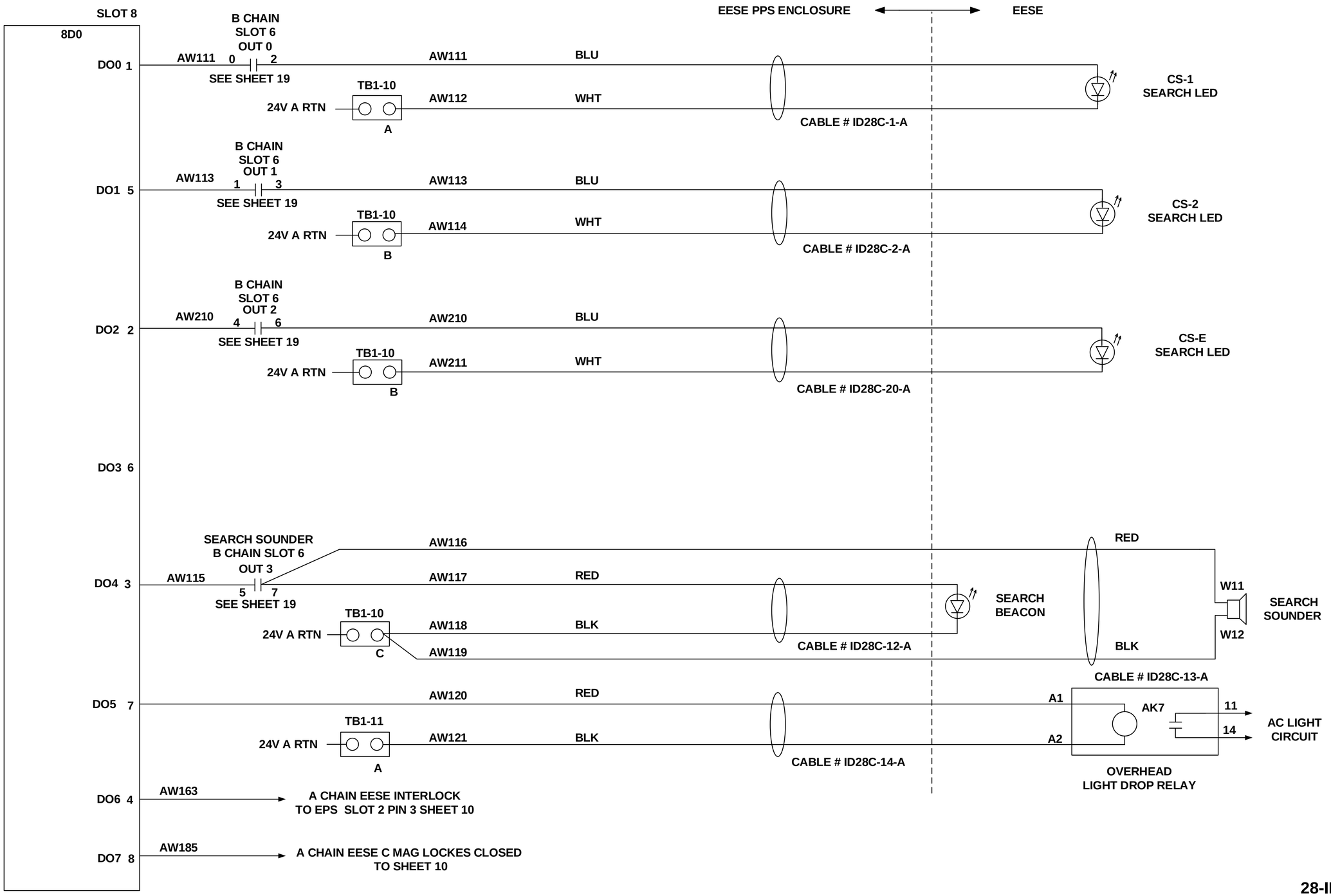

28-ID EESE C

A

LT-EL-BL-EI (DRAWING DIRECTORY)	LT-EL-BL-EI-PPS-1280-93 (DRAWING NUMBER)	D (REV)
COMPUTER REPRODUCABLE	SCALE: N/A	SHEET 7 OF 27

LT-EL-BL-EI-PPS-1280-93

REV	DESCRIPTION	DATE	BY	CHECKED	APP
	SEE SHEET 1				

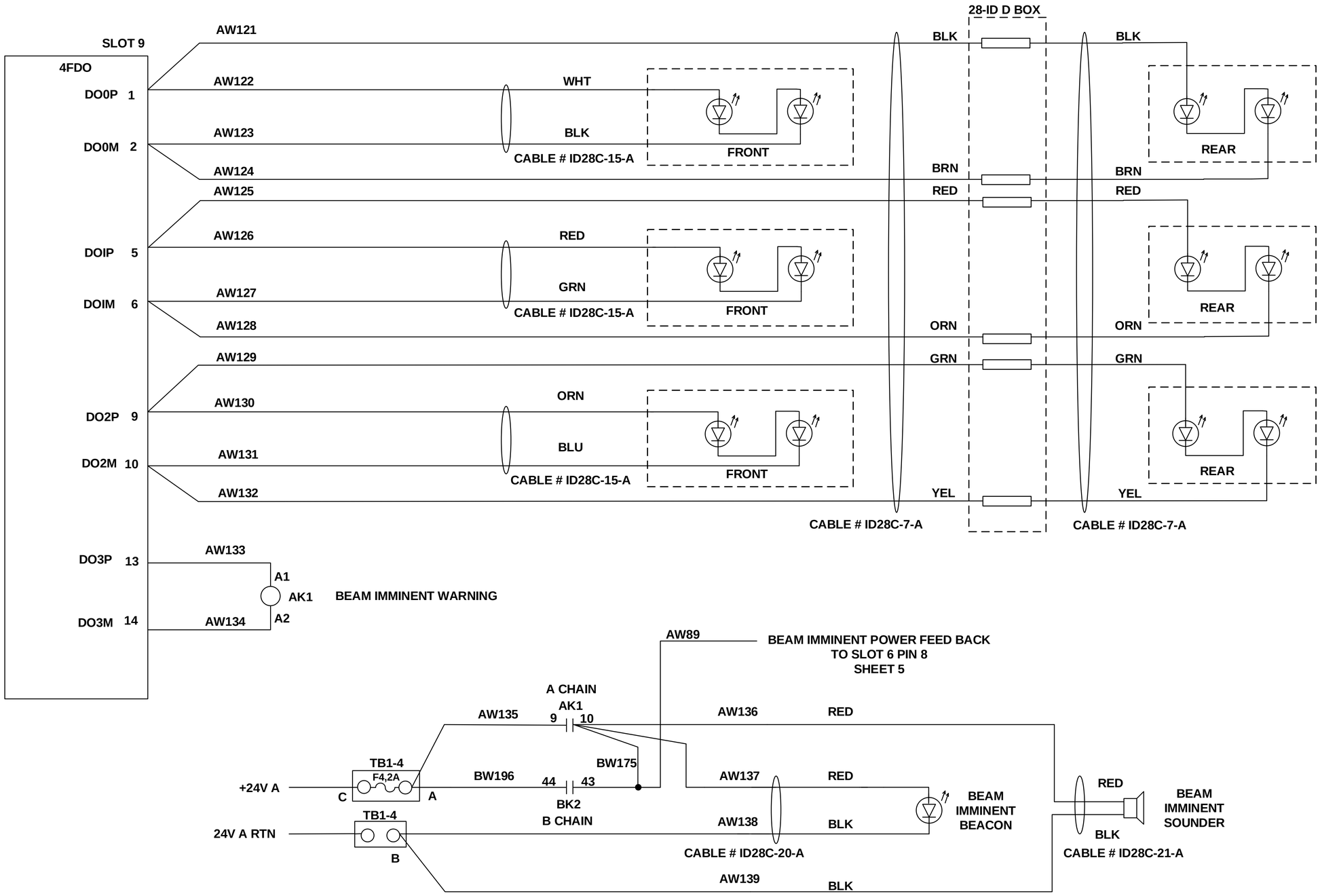

A

LT-EL-BL-EI	LT-EL-BL-EI-PPS-1280-93	D
DRAWING DIRECTORY	DRAWING NUMBER	REV

COMPUTER REPRODUCABLE | SCALE: N/A | SHEET 8 OF 27

LT-EL-BL-EI-PPS-1280-93

REV	DESCRIPTION	DATE	BY	CHECKED	APP
	SEE SHEET 1				

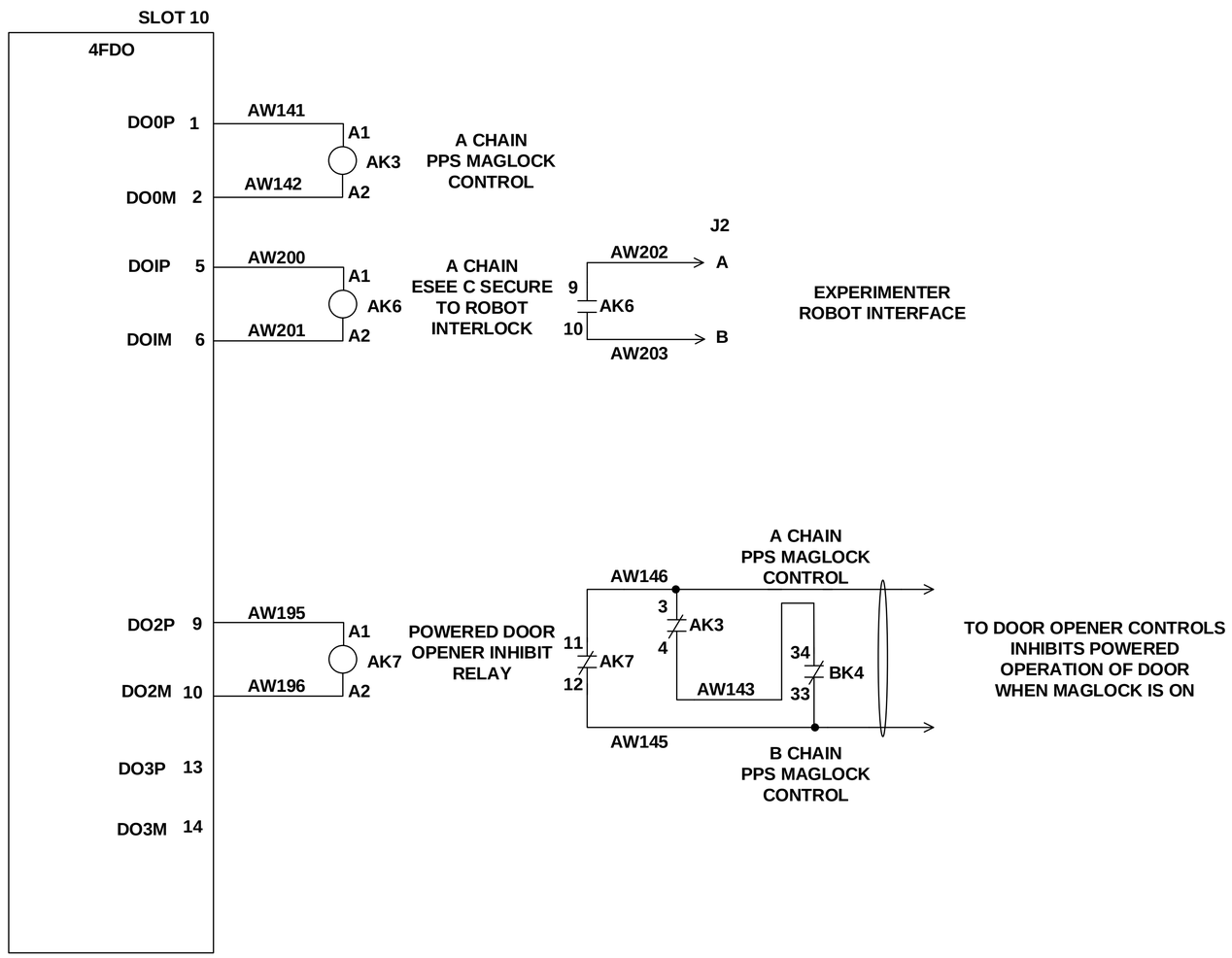

A

LT-EL-BL-EI (DRAWING DIRECTORY)	LT-EL-BL-EI-PPS-1280-93 (DRAWING NUMBER)	D (REV)
COMPUTER REPRODUCABLE	SCALE: N/A	SHEET 9 OF 27

LT-EL-BL-EI-PPS-1280-93

REV	DESCRIPTION	DATE	BY	CHECKED	APP
	SEE SHEET 1				

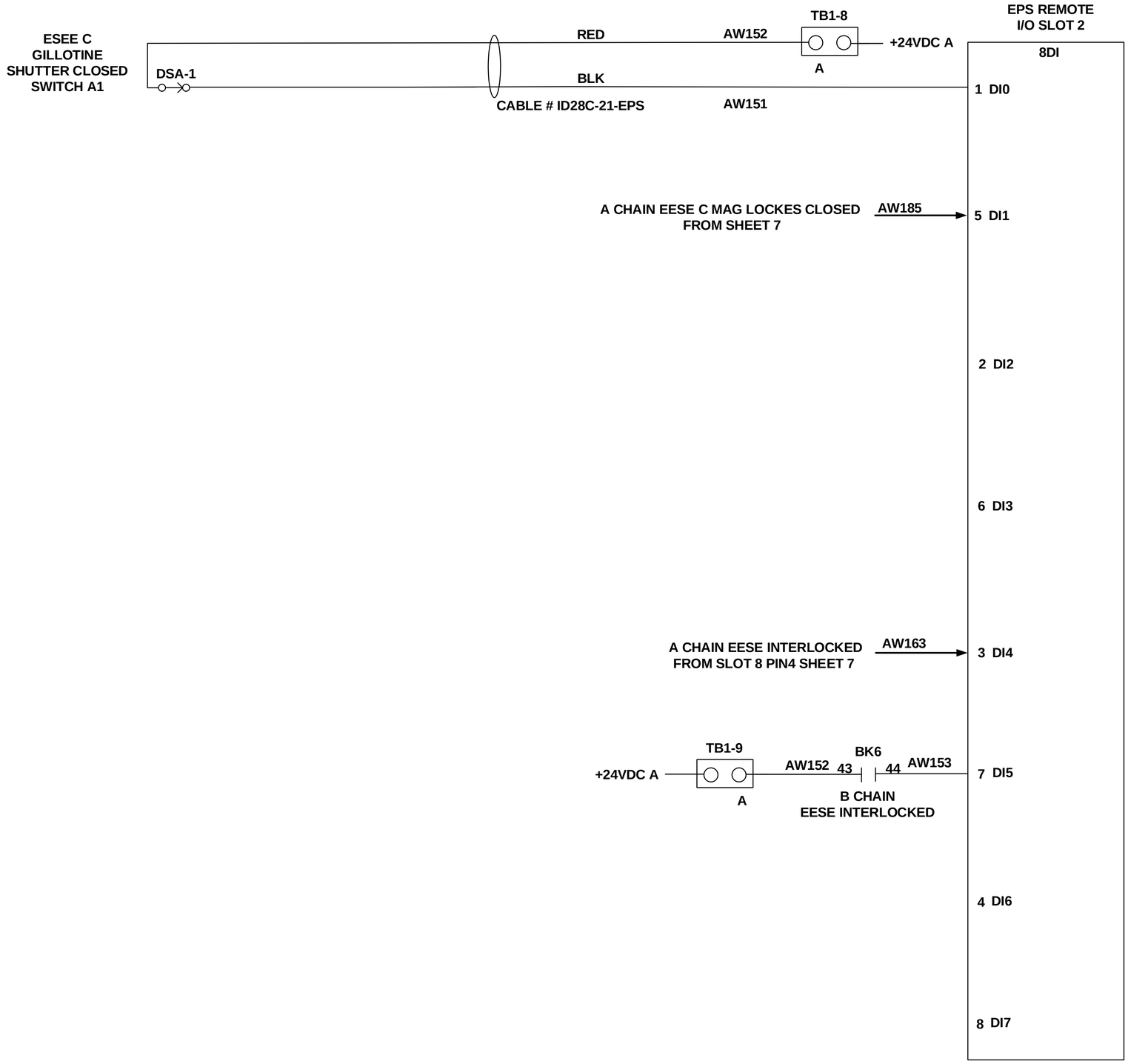

28-ID EESE C

A

LT-EL-BL-EI	LT-EL-BL-EI-PPS-1280-93	D
DRAWING DIRECTORY	DRAWING NUMBER	REV

COMPUTER REPRODUCABLE | SCALE: N/A | SHEET 10 OF 27

LT-EL-BL-EI-PPS-1280-93

REV	DESCRIPTION	DATE	BY	CHECKED	APP
	SEE SHEET 1				

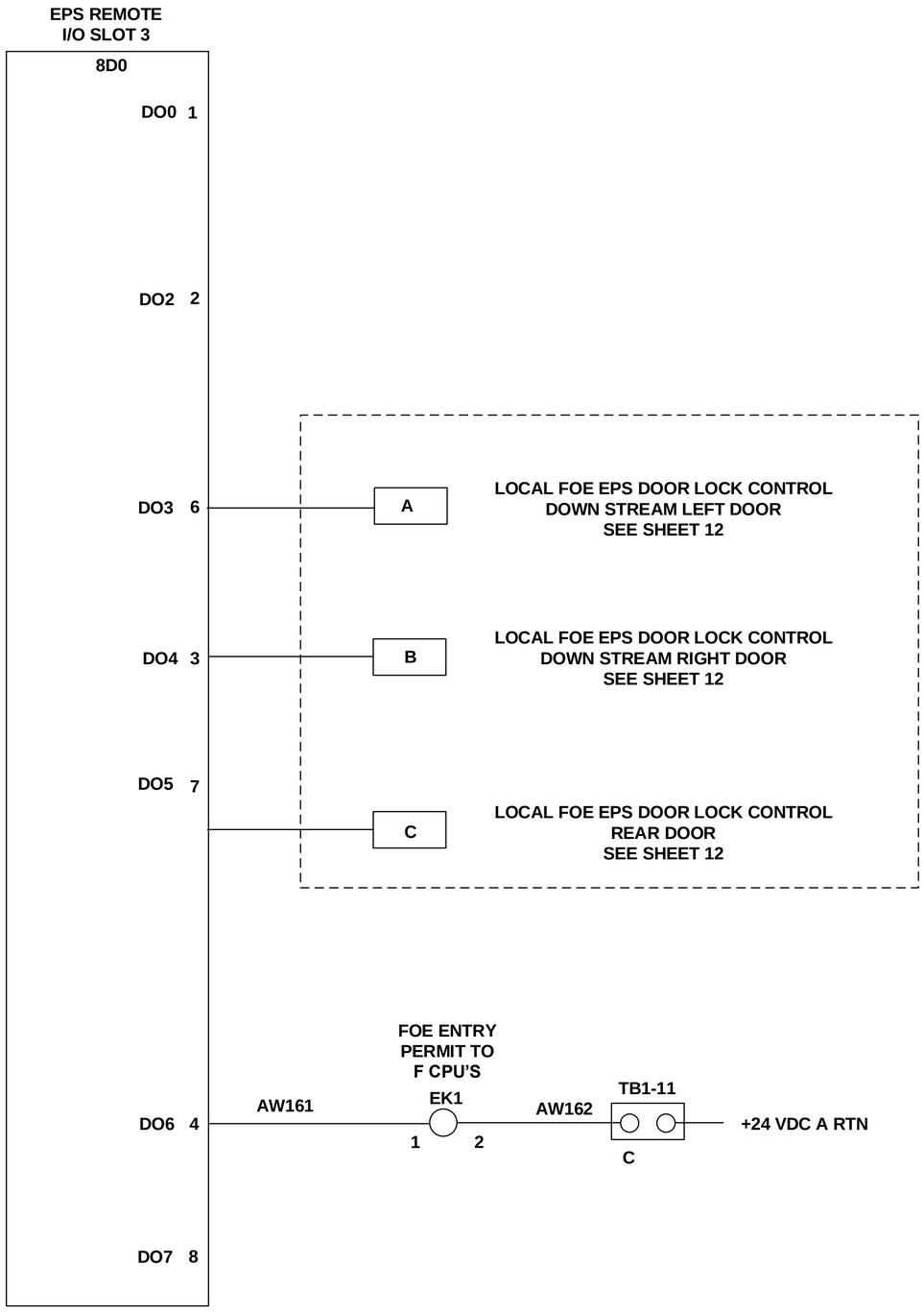

A

LT-EL-BL-EI (DRAWING DIRECTORY)	LT-EL-BL-EI-PPS-1280-93 (DRAWING NUMBER)	D (REV)
COMPUTER REPRODUCABLE	SCALE: N/A	SHEET 11 OF 27

LT-EL-BL-EI-PPS-1280-93

REV	DESCRIPTION	DATE	BY	CHECKED	APP
	SEE SHEET 1				

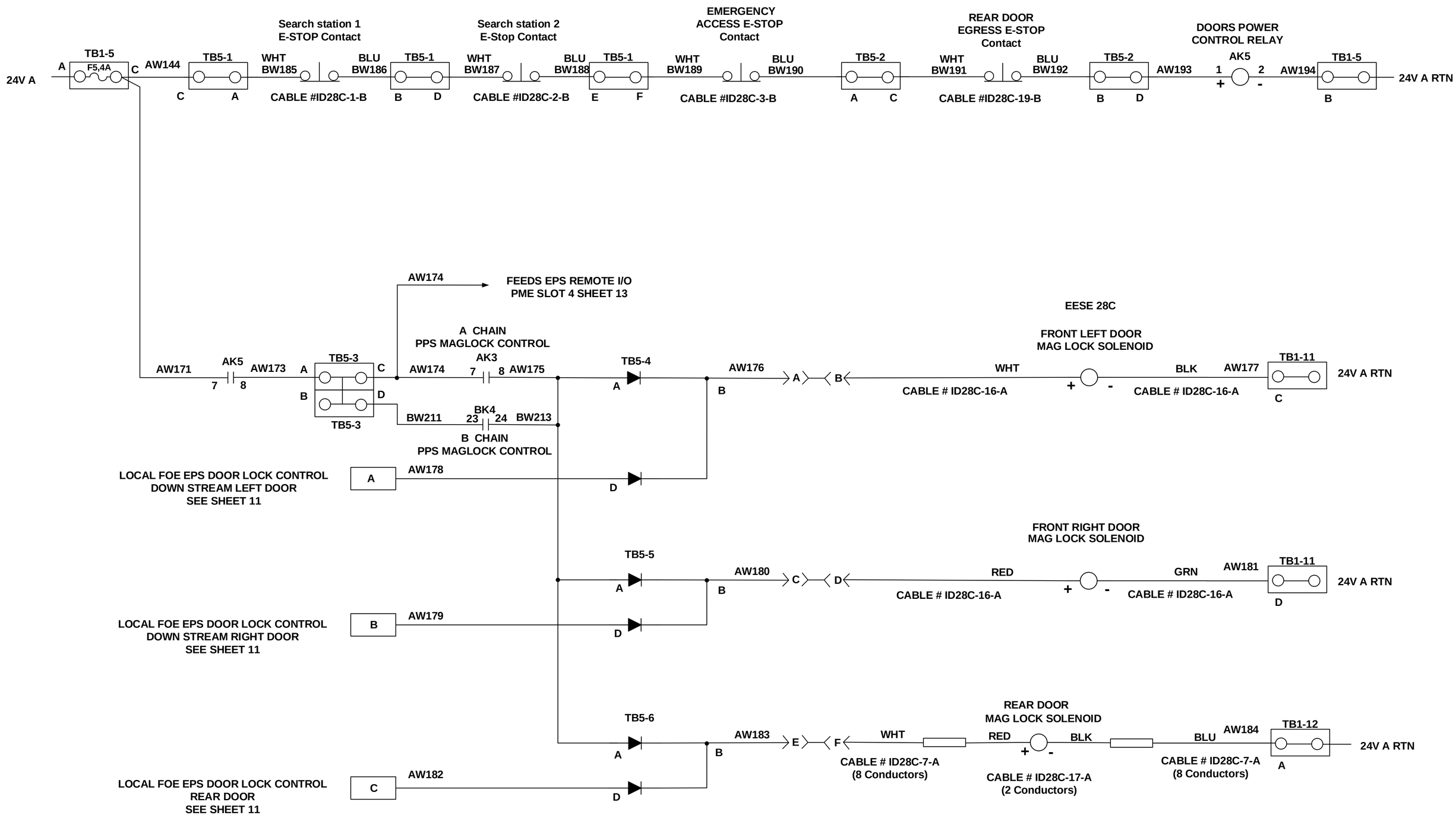

A

LT-EL-BL-EI (DRAWING DIRECTORY)	LT-EL-BL-EI-PPS-1280-93 (DRAWING NUMBER)	D (REV)
COMPUTER REPRODUCABLE	SCALE: N/A	SHEET 12 OF 27

LT-EL-BL-EI-PPS-1280-93

REV	DESCRIPTION	DATE	BY	CHECKED	APP
	SEE SHEET 1				

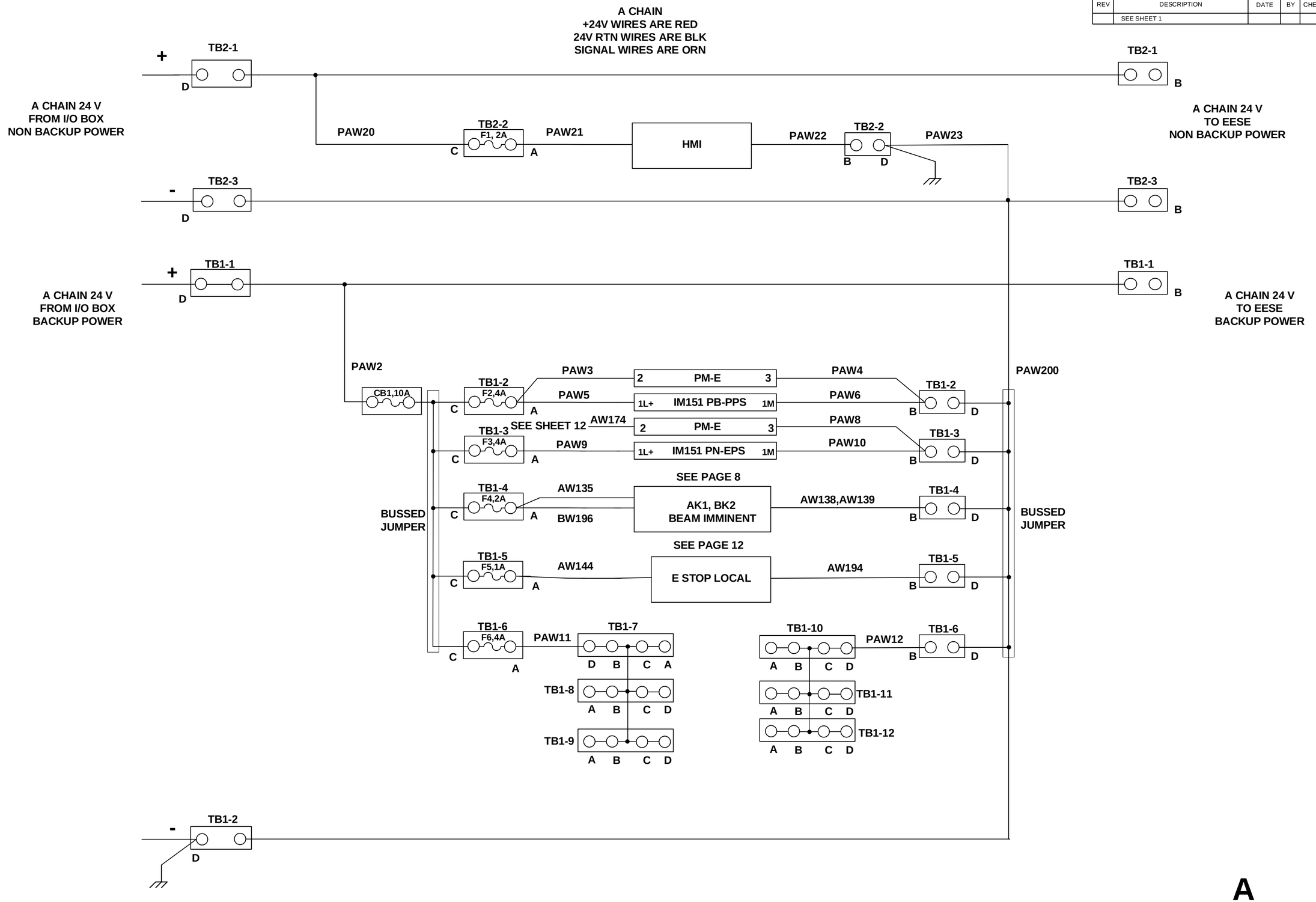

A

LT-EL-BL-EI (DRAWING DIRECTORY)	LT-EL-BL-EI-PPS-1280-93 (DRAWING NUMBER)	D (REV)
COMPUTER REPRODUCABLE	SCALE: N/A	SHEET 13 OF 27

LT-EL-BL-EI-PPS-1280-93

REV	DESCRIPTION	DATE	BY	CHECKED	APP
	SEE SHEET 1				

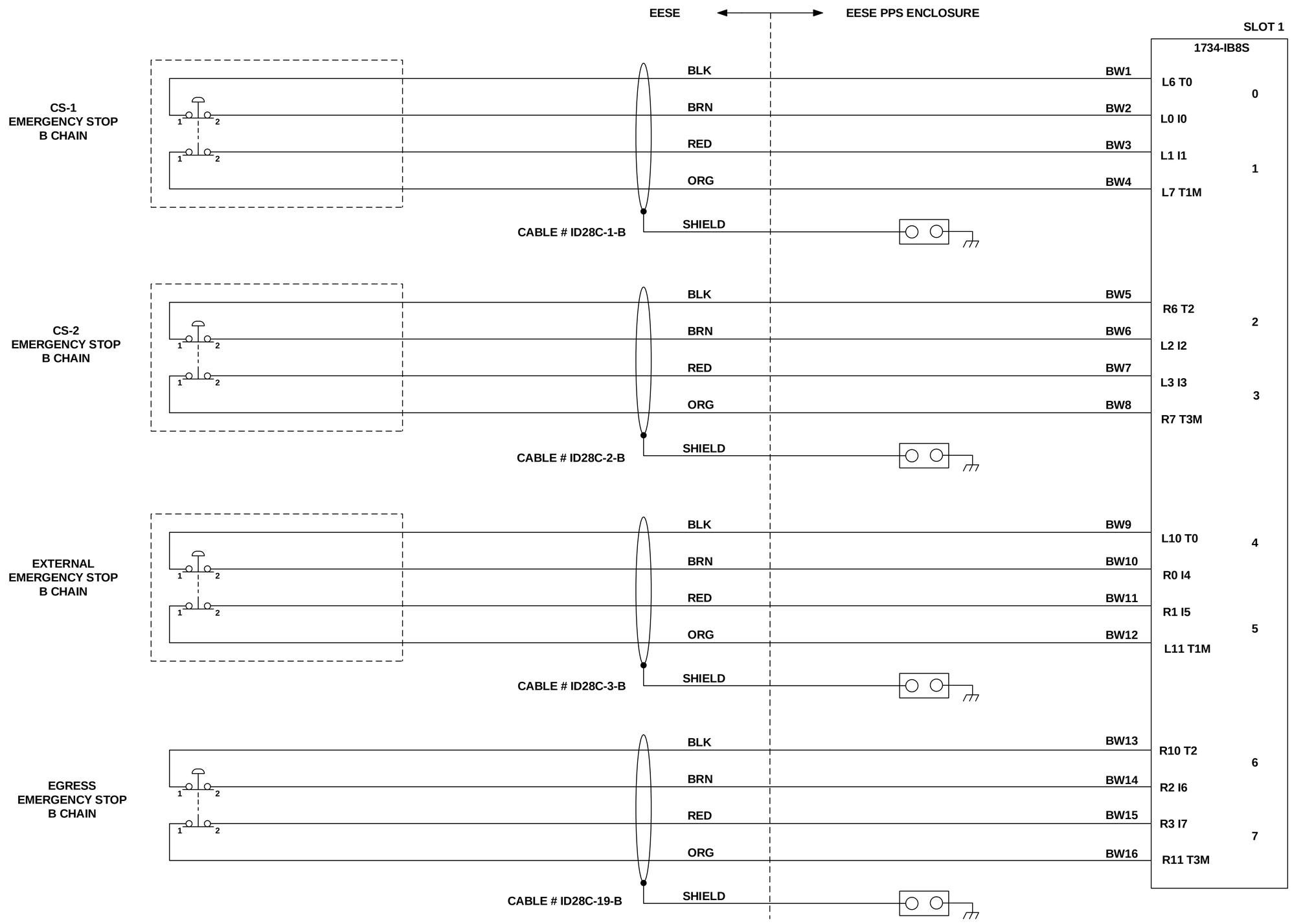

B

LT-EL-BL-EI (DRAWING DIRECTORY)	LT-EL-BL-EI-PPS-1280-93 (DRAWING NUMBER)	D (REV)
COMPUTER REPRODUCABLE	SCALE: N/A	SHEET 14 OF 27

LT-EL-BL-EI-PPS-1280-93

REV	DESCRIPTION	DATE	BY	CHECKED	APP
	SEE SHEET 1				

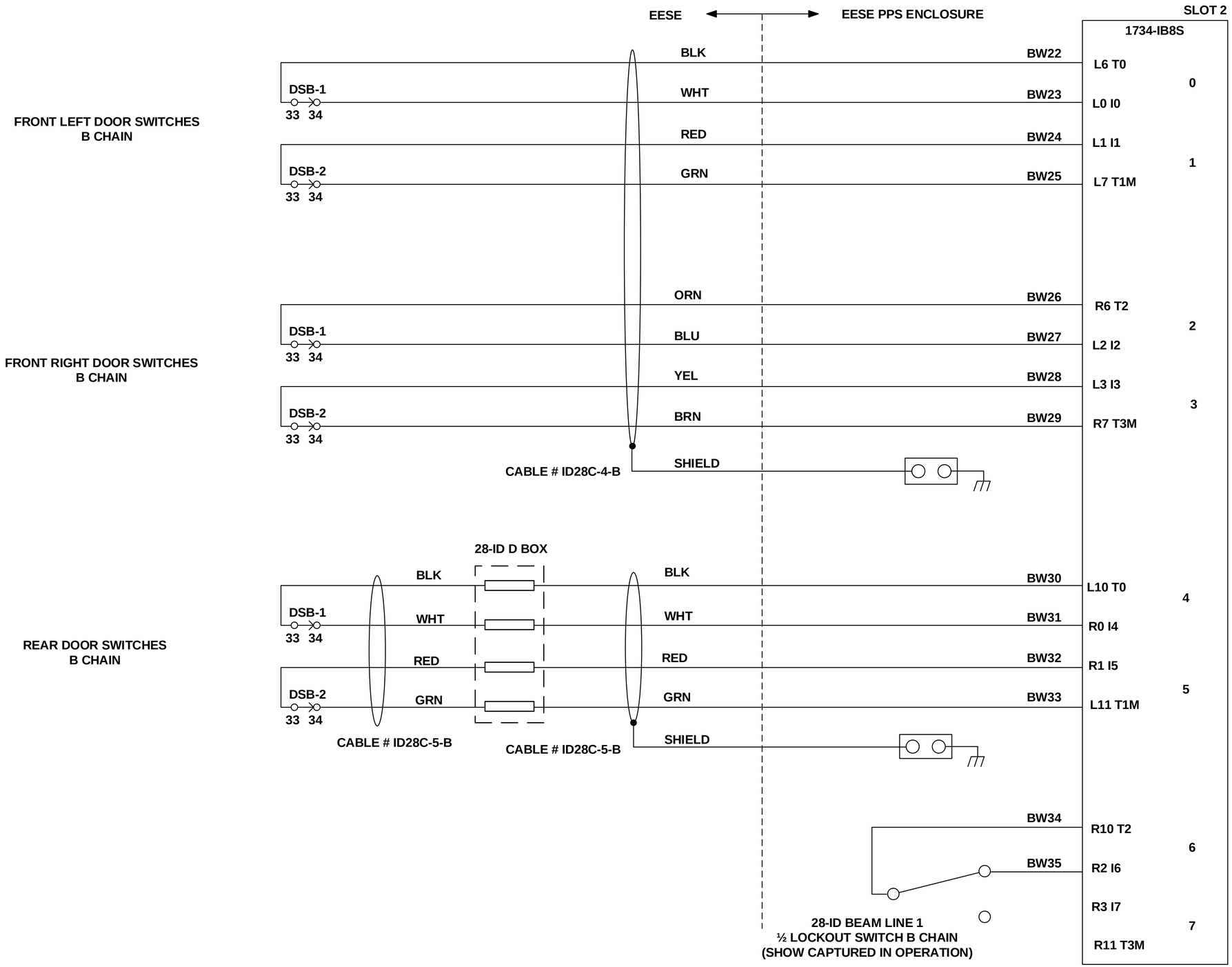

B

LT-EL-BL-EI (DRAWING DIRECTORY)	LT-EL-BL-EI-PPS-1280-93 (DRAWING NUMBER)	D (REV)
COMPUTER REPRODUCABLE	SCALE: N/A	SHEET 15 OF 27

LT-EL-BL-EI-PPS-1280-93

REV	DESCRIPTION	DATE	BY	CHECKED	APP
	SEE SHEET 1				

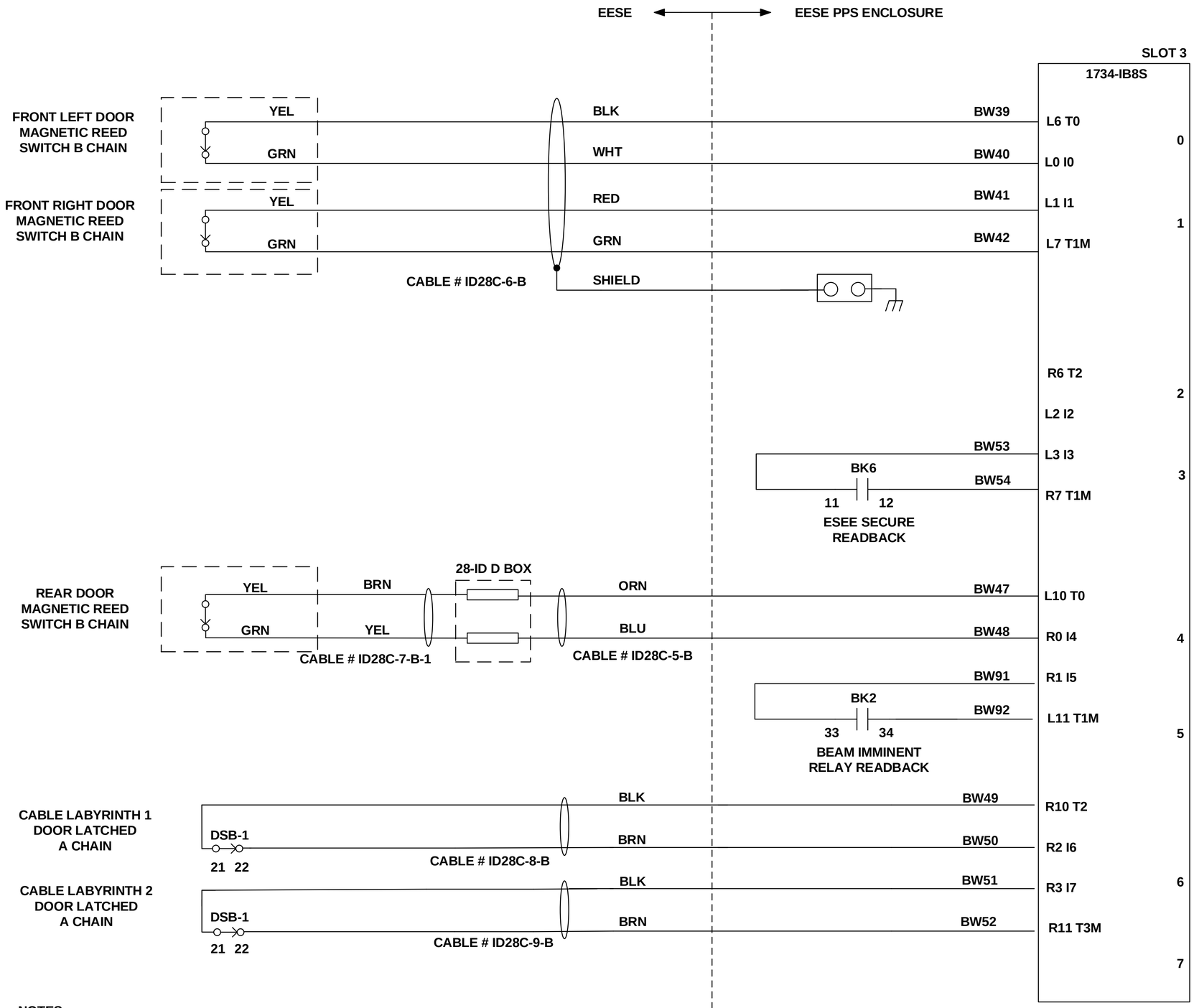

NOTES:

1. SWITCHES ARE IN CLOSED POSITION

B

LT-EL-BL-EI (DRAWING DIRECTORY)	LT-EL-BL-EI-PPS-1280-93 (DRAWING NUMBER)	D (REV)
COMPUTER REPRODUCABLE	SCALE: N/A	SHEET 16 OF 27

LT-EL-BL-EI-PPS-1280-93

REV	DESCRIPTION	DATE	BY	CHECKED	APP
	SEE SHEET 1				

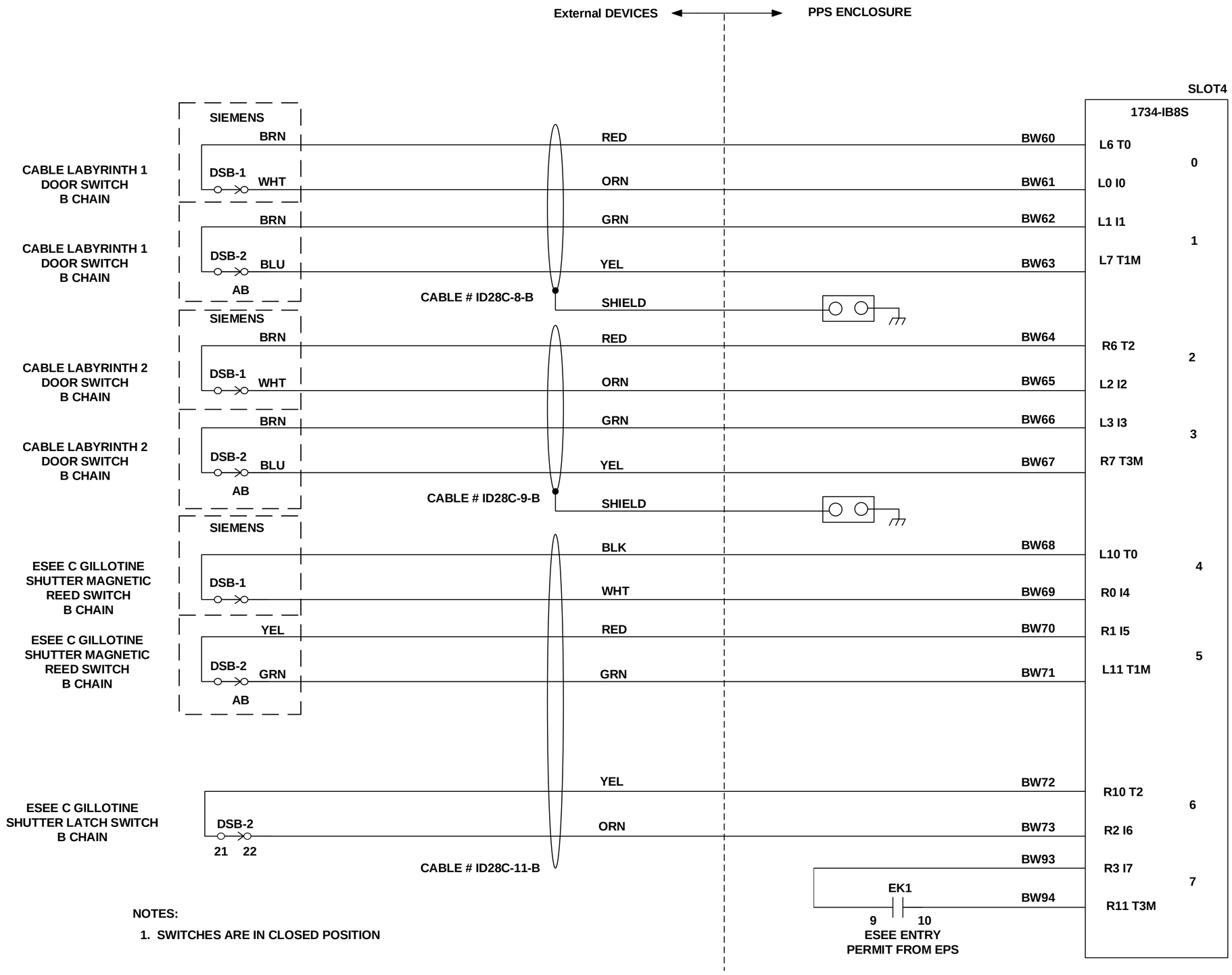

NOTES:

1. SWITCHES ARE IN CLOSED POSITION

B

LT-EL-BL-EI (DRAWING DIRECTORY)	LT-EL-BL-EI-PPS-1280-93 (DRAWING NUMBER)	D (REV)
COMPUTER REPRODUCABLE	SCALE: N/A	SHEET 17 OF 27

LT-EL-BL-EI-PPS-1280-93

REV	DESCRIPTION	DATE	BY	CHECKED	APP
	SEE SHEET 1				

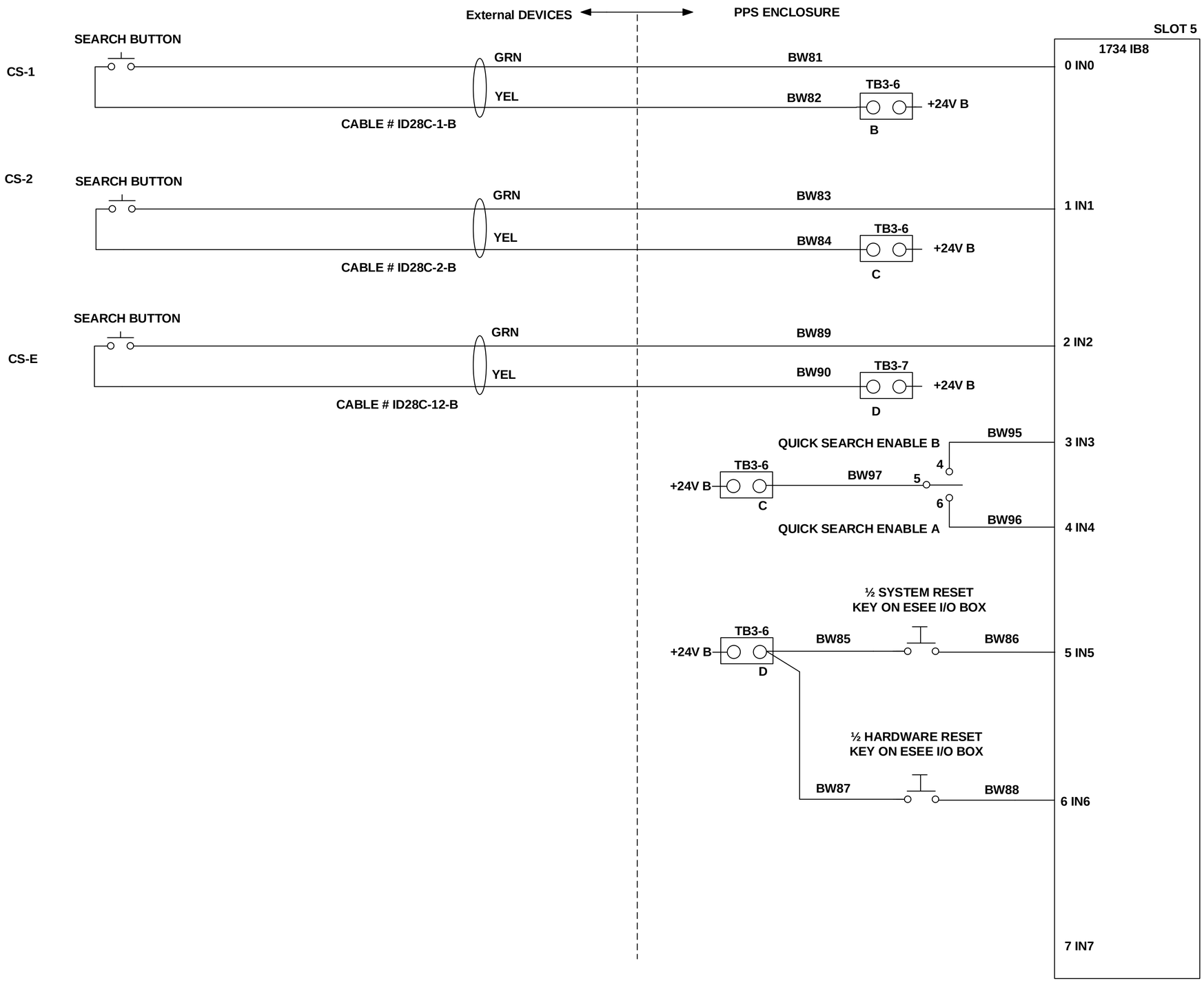

B

LT-EL-BL-EI (DRAWING DIRECTORY)	LT-EL-BL-EI-PPS-1280-93 (DRAWING NUMBER)	D (REV)
COMPUTER REPRODUCABLE	SCALE: N/A	SHEET 18 OF 27

LT-EL-BL-EI-PPS-1280-93

REV	DESCRIPTION	DATE	BY	CHECKED	APP
	SEE SHEET 1				

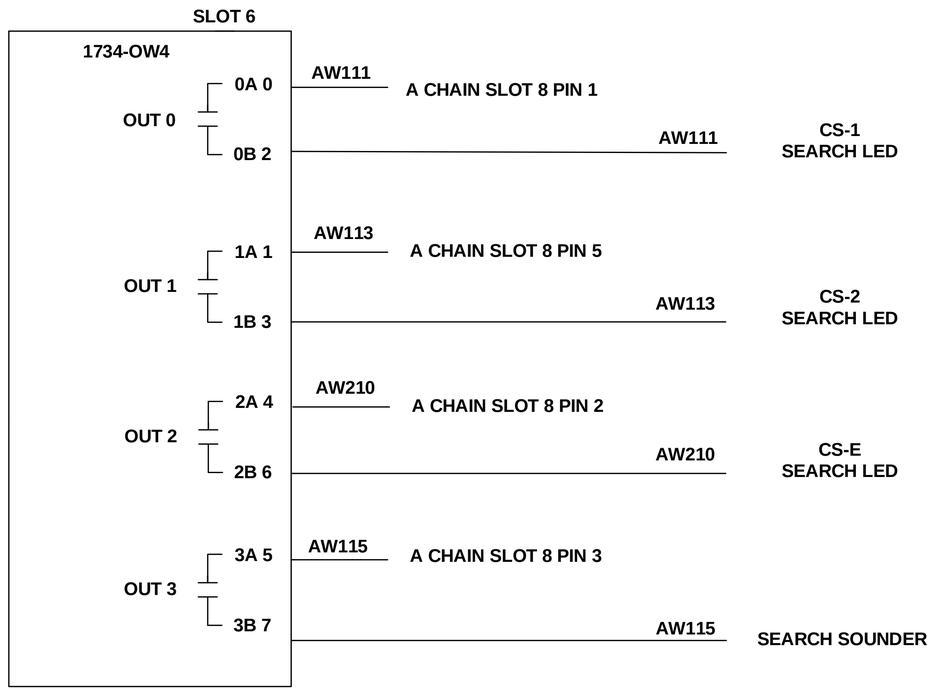

REFERENCE A CHAIN
SEE SHEET 7

B

LT-EL-BL-EI	LT-EL-BL-EI-PPS-1280-93	D
DRAWING DIRECTORY	DRAWING NUMBER	REV

COMPUTER REPRODUCABLE | SCALE: N/A | SHEET 19 OF 27

LT-EL-BL-EI-PPS-1280-93

REV	DESCRIPTION	DATE	BY	CHECKED	APP
	SEE SHEET 1				

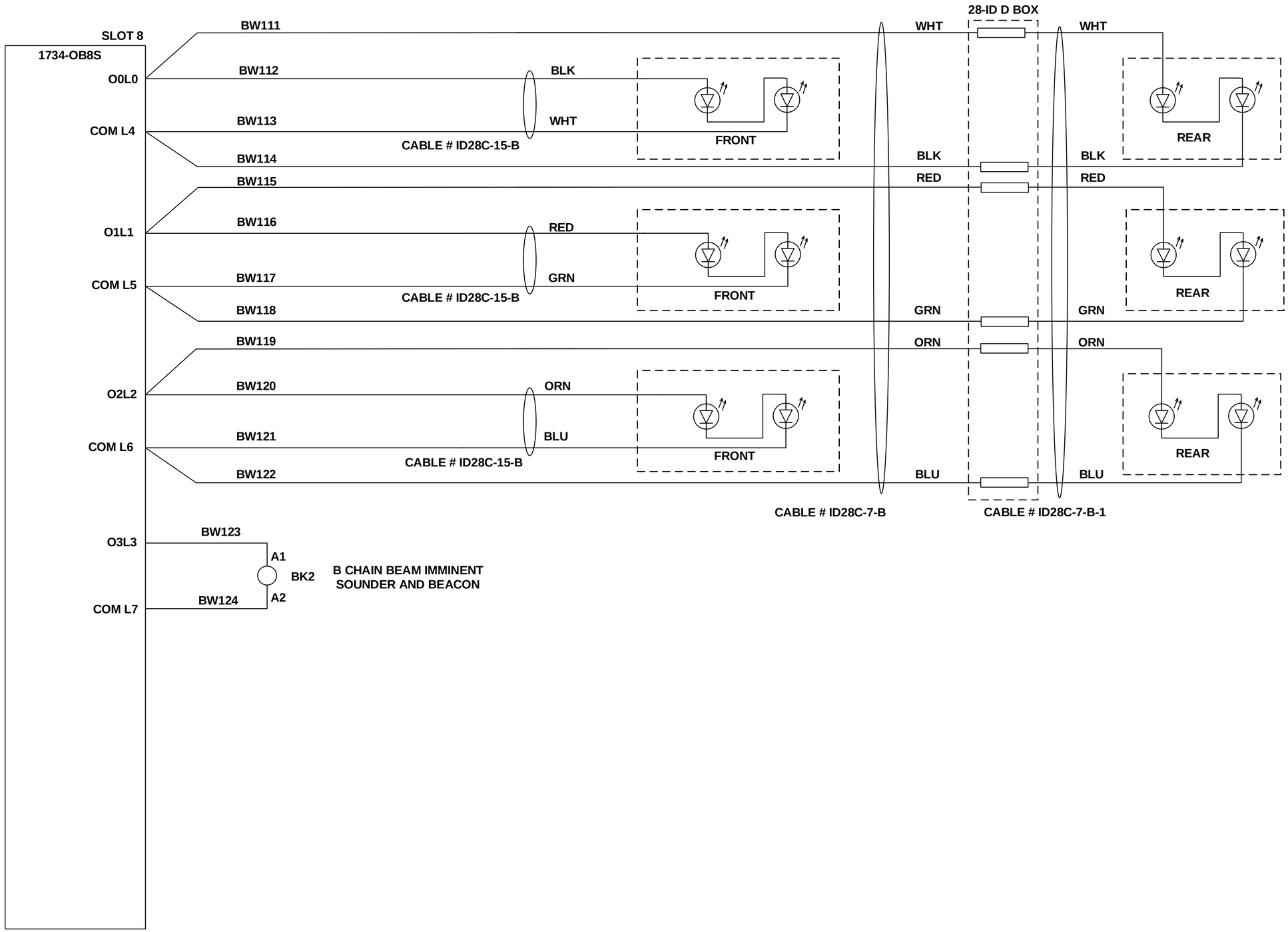

B

LT-EL-BL-EI (DRAWING DIRECTORY)	LT-EL-BL-EI-PPS-1280-93 (DRAWING NUMBER)	D (REV)
COMPUTER REPRODUCABLE	SCALE: N/A	SHEET 20 OF 27

LT-EL-BL-EI-PPS-1280-93

REV	DESCRIPTION	DATE	BY	CHECKED	APP
	SEE SHEET 1				

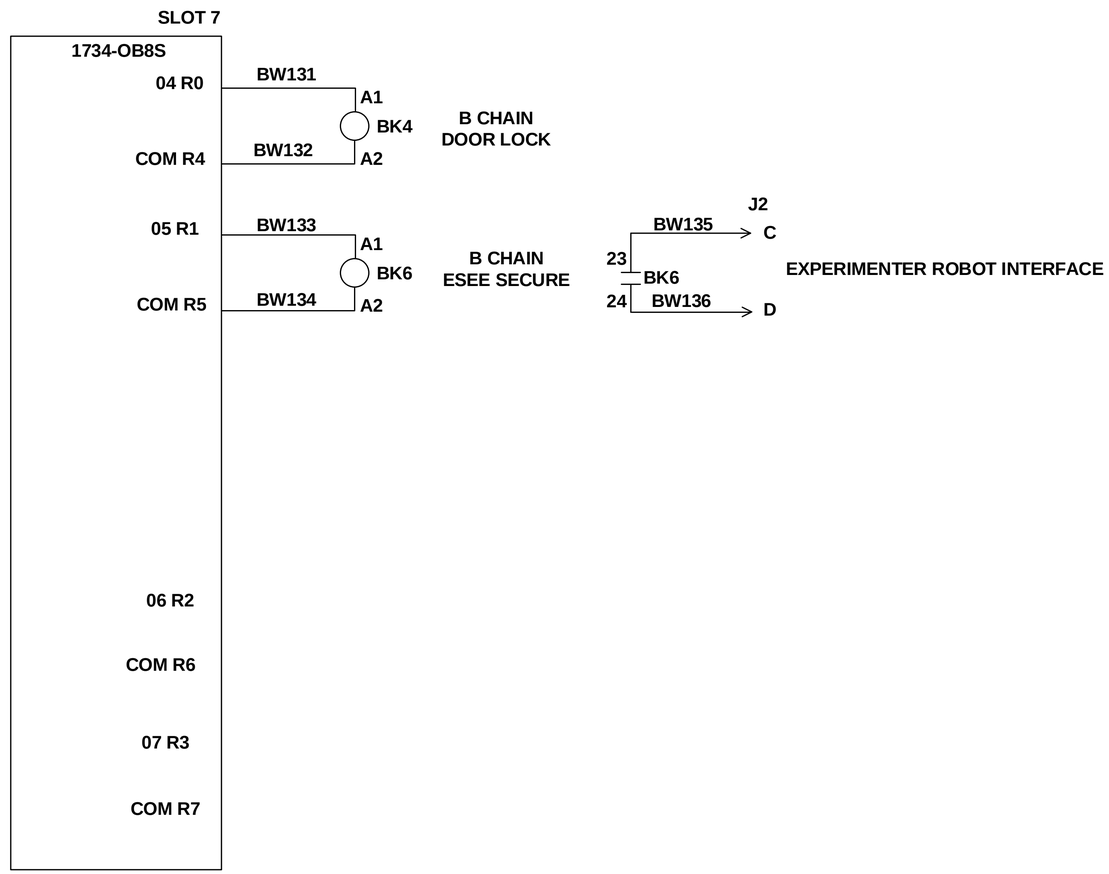

B

LT-EL-BL-EI	LT-EL-BL-EI-PPS-1280-93	D
DRAWING DIRECTORY	DRAWING NUMBER	REV

COMPUTER REPRODUCABLE | SCALE: N/A | SHEET 21 OF 27

LT-EL-BL-EI-PPS-1280-93

REV	DESCRIPTION	DATE	BY	CHECKED	APP
	SEE SHEET 1				

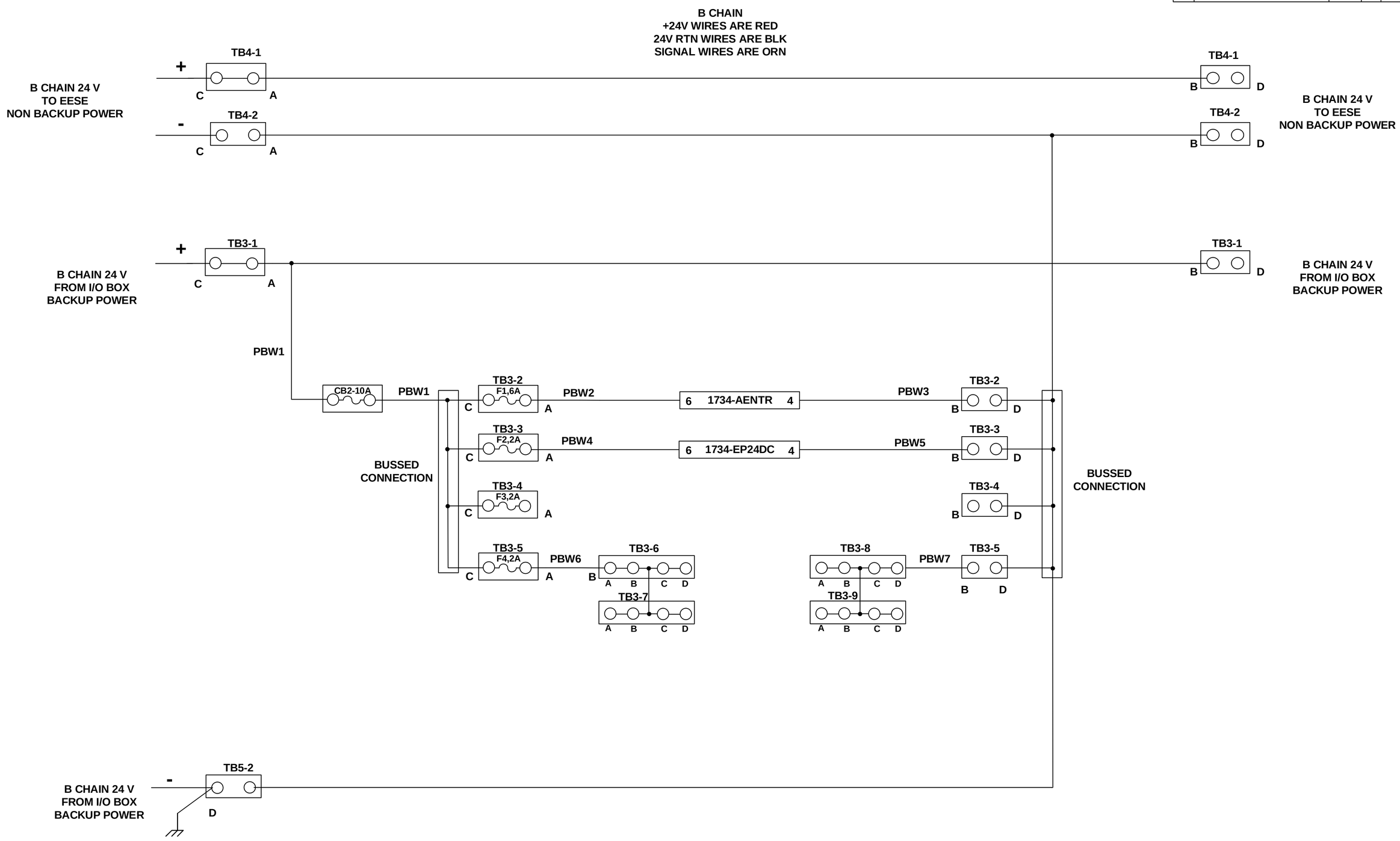

B

LT-EL-BL-EI	LT-EL-BL-EI-PPS-1280-93	D
DRAWING DIRECTORY	DRAWING NUMBER	REV

COMPUTER REPRODUCABLE | SCALE: N/A | SHEET 22 OF 27

LT-EL-BL-EI-PPS-1280-93

REV	DESCRIPTION	DATE	BY	CHECKED	APP
	SEE SHEET 1				

A CHAIN

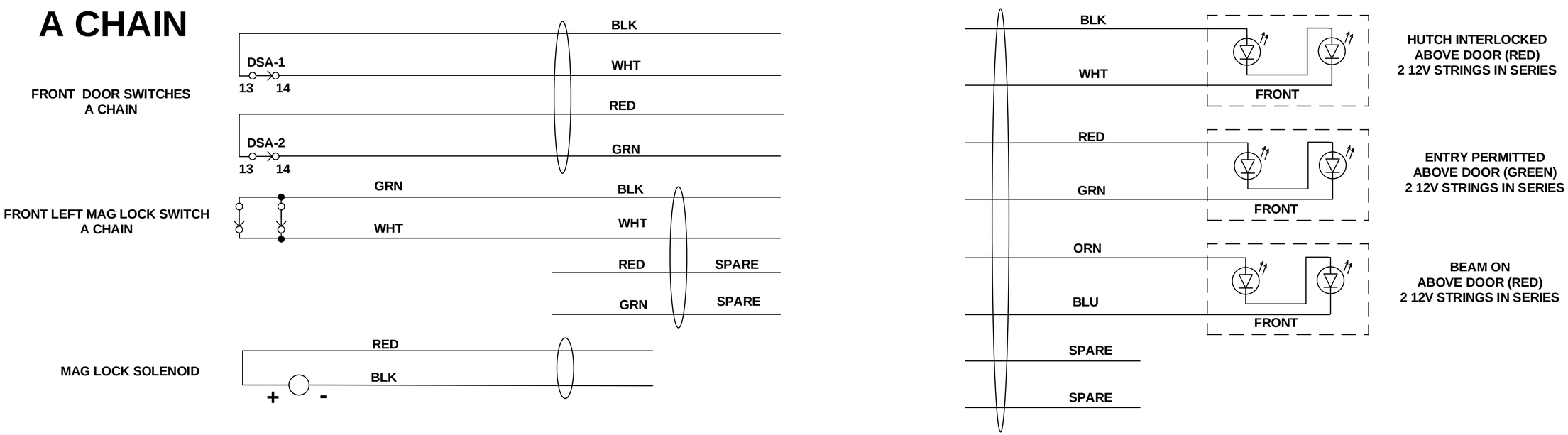

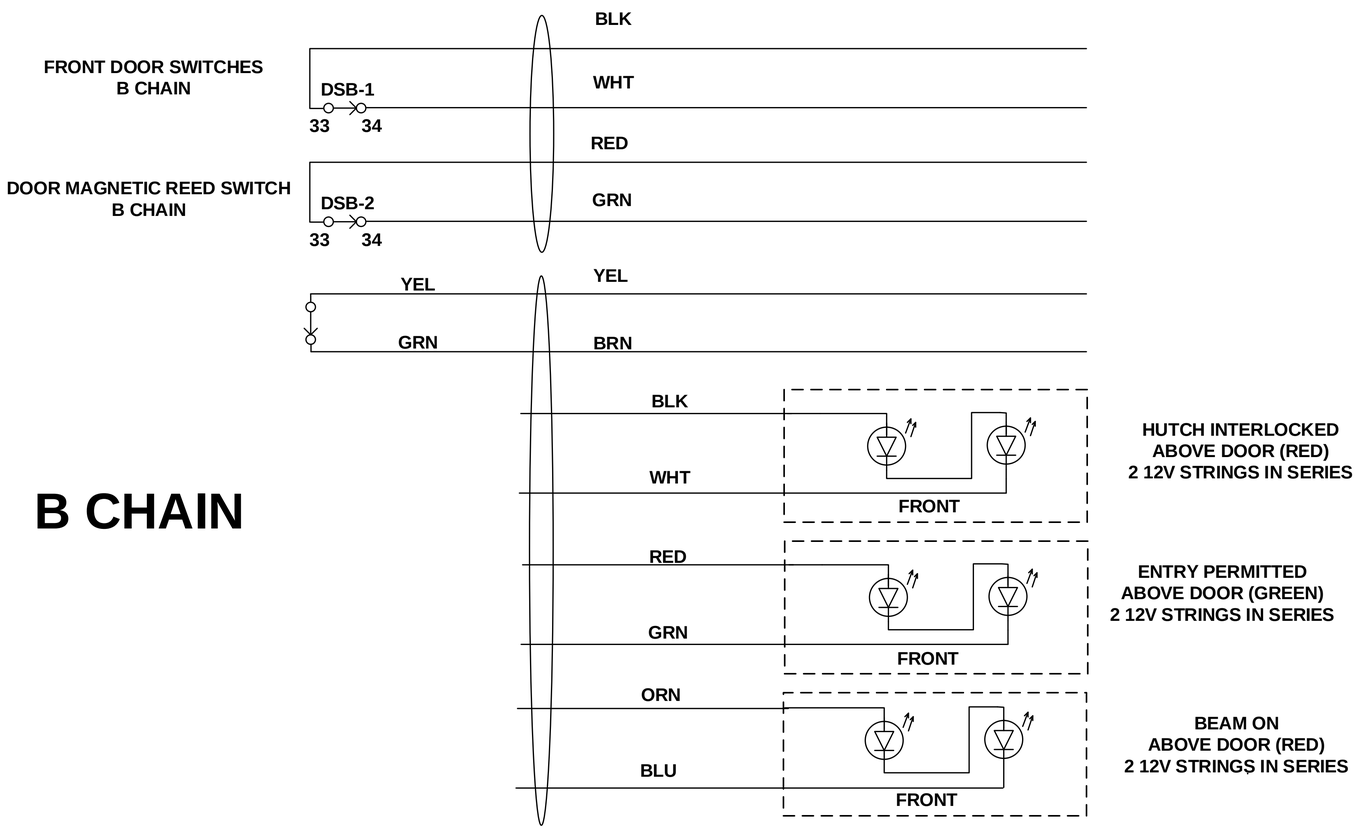

B CHAIN

LT-EL-BL-EI (DRAWING DIRECTORY)	LT-EL-BL-EI-PPS-1280-93 (DRAWING NUMBER)	D (REV)
COMPUTER REPRODUCABLE	SCALE: N/A	SHEET 23 OF 27

LT-EL-BL-EI-PPS-1280-93

REV	DESCRIPTION	DATE	BY	CHECKED	APP
	SEE SHEET 1				

28-ID Cable list

CABLE Num.	CHAIN	From LOCATION	To LOCATION	CONDUCTORS Needed
ID28C-1-A	A	C	CS1&Emergency stop	8
ID28C-1-B	B	C	CS1&Emergency stop	8
ID28C-2-A	A	C	CS2&Emergency stop	8
ID28C-2-B	B	C	CS2&Emergency stop	8
ID28C-3-A	A	C	Emergency Entrance E-Stop	4
ID28C-3-B	B	C	Emergency Entrance E-Stop	4
ID28C-4-A	A	C	FRONT DOOR Left&Right Door Switches	8
ID28C-4-B	B	C	FRONT DOOR Left&Right Door Switches	8
ID28C-5-A	A	C	Rear Door Switch &MAG LOCK SWITHC	6
ID28C-5-B	B	C	rear Door Switch & REED SWITCH	6
ID28C-6-A	A	C	FRONT DOOR Left&Right Mag Lock Switch	4
ID28C-6-B	B	C	FRONT DOOR Left&Right REED Switch	4
ID28C-7-A	A	C	REAR DOOR Interlock, entry permit, Beam On Lights	6
ID28C-7-B	B	C	REAR DOOR Interlock, entry Permit, Beam on lights	6
ID28C-8-A	A	C	Cable Labyrinth1 Door Latch A Chain (6 Conductors)	2
ID28C-8-B	B	C	Cable Labyrinth1 Door Latch B Chain (6 Conductors)	2
ID28C-8-A	A	C	Cable Labyrinth1 Door Switch A Chain (6 Conductors)	4
ID28C-8-B	B	C	Cable Labyrinth1 Door Switch B Chain (6 Conductors)	4
ID28C-9-A	A	C	Cable Labyrinth2 Door Latch A Chain (6 Conductors)	2
ID28C-9-B	B	C	Cable Labyrinth2 Door Latch B Chain (6 Conductors)	2
ID28C-9-A	A	C	Cable Labyrinth2 Door Switch A Chain (6 Conductors)	4
ID28C-9-B	B	C	Cable Labyrinth2 Door Switch B Chain (6 Conductors)	4
ID28C-10-A	A	C	SPARE	
ID28C-10-B	B	C	SPARE	
ID28C-11-A	A	C	Gillotine shutter A1 and A2 Closed Switches	4
ID28C-11-B	B	C	Gillotine shutterB1 and B2Closed and Open Switch	4
ID28C-12-A	A	C	Search Beacon	2
ID28C-12-B	B	C	CS-E Search button	
ID28C-13-A	A	C	Search Sounder	2
ID28C-13-B	B	C	SPARE	
ID28C-14-A	A	C	OverHead Lights	
ID28C-14-B	B	C	SPARE	
ID28C-15-A	A	C	FRONT DOOR A Chain Interlock, Entry Permit, Beam ligh	6
ID28C-15-B	B	C	FRONT DOOR B Chain Interlock, Entry Permit, Beam ligh	6
ID28C-16-A	A	C	FRONT DOOR LEFT&Right Door MagLOCK Coil	4
ID28C-16-B	B	C	SPARE	
ID28C-17-A	A	C	REAR Door Maglock Coil	2
ID28C-17-B	B	C	SPARE	
ID28C-18-A	A	C	Door Inhibit Relay	4
ID28C-18-B	B	C	SPARE	4
ID28C-19-A	A	C	EGRESS Emergency Switch (Rear Door)	6
ID28C-19-B	B	C	EGRESS Emergency Switch (Rear Door)	6
ID28C-20-A	A	C	Beam Imminent beacon	
ID28C-20-B	B	C	SPARE	
ID28C-21-A	A	C	Beam Imminent sounder	
ID28C-21-B	B	C	SPARE	
ID28C-21-EPS	EPS	C	Gillotine shutter A1 Closed Switch	

A

LT-EL-BL-EI-PPS-1280-93

LT-EL-BL-EI (DRAWING DIRECTORY)	LT-EL-BL-EI-PPS-1280-93 (DRAWING NUMBER)	D (REV)
COMPUTER REPRODUCABLE	SCALE: N/A	SHEET 24 OF 27

REV	DESCRIPTION	DATE	BY	CHECKED	APP
	SEE SHEET 1				

28-ID C

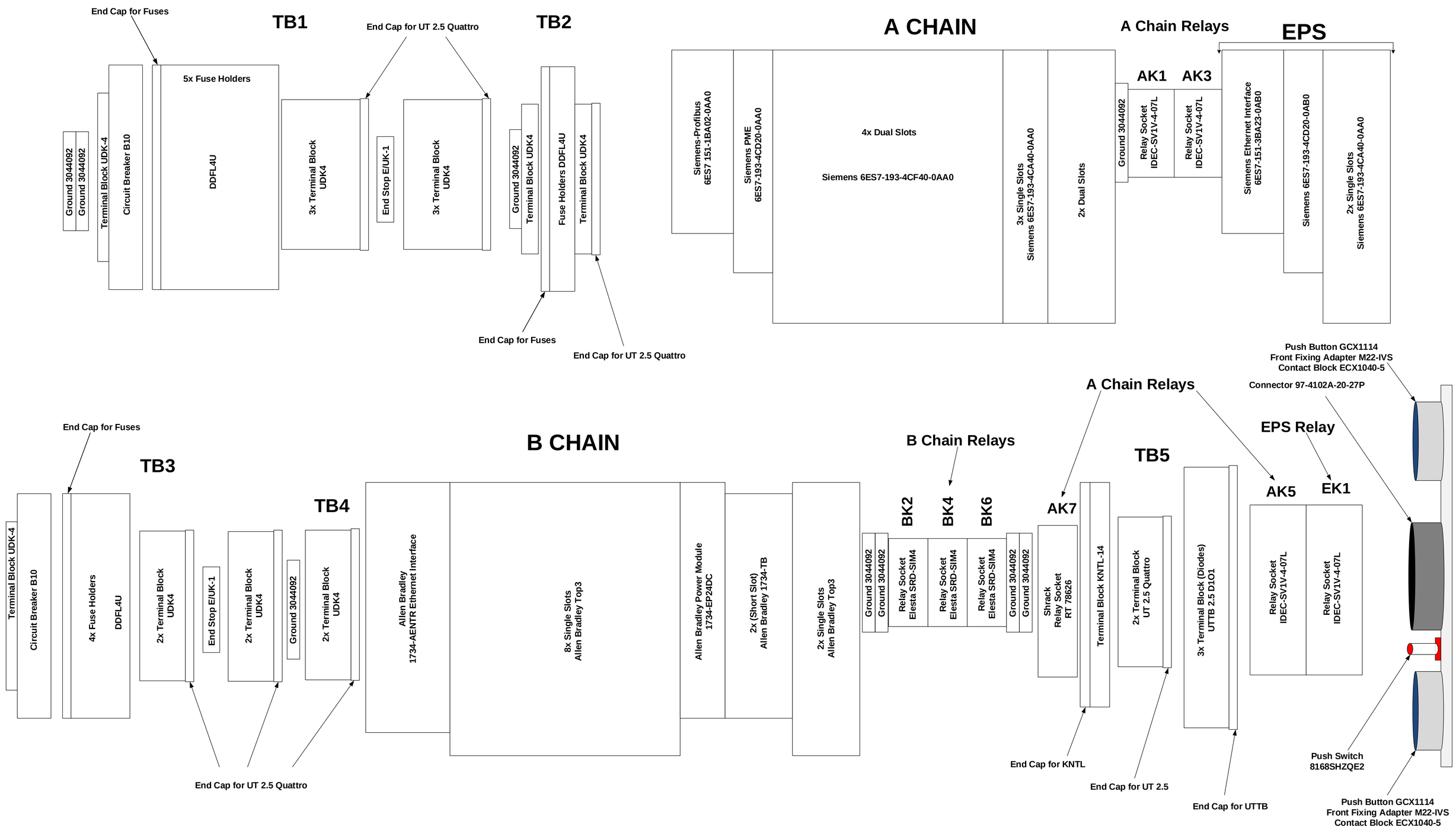

LT-EL-BL-EI	LT-EL-BL-EI-PPS-1280-93	D
DRAWING DIRECTORY	DRAWING NUMBER	REV

COMPUTER REPRODUCABLE | SCALE: N/A | SHEET 25 OF 27

LT-EL-BL-EI-PPS-1280-93

REV	DESCRIPTION	DATE	BY	CHECKED	APP
	SEE SHEET 1				

ROW 1:							
A CHAIN							
SLOT	MODULE	SOCKET	DESCRIPTION	VENDOR			
	[2]	[2]					
	[13]						
	WMZS1B10	N/A	Circuit Breaker B10	Eaton			
TB1	[6]	1>5 [8]	6>8 [7]	[11]	[5]	9>11 [7]	[11]
TB2	[2]	1 [7]	[6]	2 [8]	3 [7]	[11]	
	6ES7-151-1BA02-0AA0	N/A	PROFI-BUS	SIEMENS			
1	6ES7-4CA50-0AB0	6ES7-193-4CD20-0AA0	POWER MODULE-PME	SIEMENS			
2	6ES7-138-4FA04-0AB0	6ES7-193-4CF40-0AA0	4/8 FDI 8 SAFE IN	SIEMENS			
3	6ES7-138-4FA04-0AB0	6ES7-193-4CF40-0AA0	4/8 FDI 8 SAFE IN	SIEMENS			
4	6ES7-138-4FA04-0AB0	6ES7-193-4CF40-0AA0	4/8 FDI 8 SAFE IN	SIEMENS			
5	6ES7-138-4FA04-0AB0	6ES7-193-4CF40-0AA0	4/8 FDI 8 SAFE IN	SIEMENS			
6	6ES7-131-4BF00-0AB0	6ES7-193-4CA40-0AA0	8DI STANDARD IN	SIEMENS			
7	6ES7-131-4BF00-0AB0	6ES7-193-4CA40-0AA0	8DI STANDARD IN	SIEMENS			
8	6ES7-132-4BF00-0AA0	6ES7-193-4CA40-0AA0	8DO	SIEMENS			
9	6ES7-138-4FB03-0AB0	6ES7-193-4CF40-0AA0	4FD0 SAFE OUT	SIEMENS			
	[2]						
AK1	RF1V-3A1BL-D24	SF1V-4-07L	RELAY SOCKET	IDEC			
AK3	RF1V-3A1BL-D24	SF1V-4-07L	RELAY SOCKET	IDEC			
EPS							
	6ES7-151-3BA23-0AB0	N/A	EHTERNET INTERFACE	SIEMENS			
1	6ES7-4CA50-0AB0	6ES7-193-4CD20-0AB0	POWER MODULE-PME	SIEMENS			
2	6ES7-131-4BF00-0AB0	6ES7-193-4CA40-0AA0	8DI STANDARD IN	SIEMENS			
3	6ES7-132-4BF00-0AA0	6ES7-193-4CA40-0AA0	8DO	SIEMENS			
ROW 2:							
B CHAIN							
SLOT	MODULE	SOCKET (QTY)	DESCRIPTION	VENDOR			
	[13]						
	WMZS1B10	N/A	Circuit Breaker B10	Eaton			
TB3	[6]	1>4 [8]	5>6 [7]	[11]	[5]	7>8 [7]	[11]
TB4	[2]	1>2 [7]	[11]				
	1734 AENTR	N/A	EHTERNET INTERFACE	AB			
1	1734 IB8S	1734 TOP3 (2)	AB INPUT SAFETY IN	AB			
2	1734 IB8S	1734 TOP3 (2)	AB INPUT SAFETY IN	AB			
3	1734 IB8S	1734 TOP3 (2)	AB INPUT SAFETY IN	AB			
4	1734 IB8S	1734 TOP3 (2)	AB INPUT SAFETY IN	AB			
	1734 EP24DC	N/A	POWER MODULE	AB			
5	1734-IB8	1734 TB	AB INPUT STANDARD IN	AB			
6	1734-OW4	1734 TB	RELAY MODULE 4 OUTPUT	AB			
7	1734-OB8S	1734 TOP3 (2)	AB INPUT SAFETY IN	AB			
	[2]	[2]					
BK2	SIM 312	SRD-SIM4	RELAY SOCKET	ELESTA			
BK4	SIM 312	SRD-SIM4	RELAY SOCKET	ELESTA			
BK6	SIM 312	SRD-SIM4	RELAY SOCKET	ELESTA			
	[2]	[2]					
AK7	OW5669.12/983/61	RT 78626	RELAY SOCKET	SHRACK			
TB5	[15]	1 [14]	2>3 [7]	[11]	4>6 [16]	[17]	
AK5	RF1V-3A1BL-D24	SF1V-4-07L	RELAY SOCKET	IDEC			
EK1	RF1V-3A1BL-D24	SF1V-4-07L	RELAY SOCKET	IDEC			

REV	DESCRIPTION	DATE	BY	CHECKED	APP
	SEE SHEET 1				

Paired part numbers are color coordinated.

COLOR	PROD #	TYPE
[1]	3044636	Double-level terminal block - UTTB 2,5
[2]	3044092	GROUND
[3]	3047293	End cover - D-UTTB 2,5/4
[4]	3047303	Spacer plate - DP-UTTB 2,5/4
[5]	1201413	End clamp - E/UK 1
[6]	EPDDFL4U	End Plate; Term Blk; DIN Rail; Gray;
[7]	3044542	DIN Rail Terminal Blocks UT 2 5/4-QUATTRO
[8]	DDFL-4U	24V FUSES
[9]	3044076	Feed-through terminal block - UT 2,5
[10]	3047028	End cover - D-UT 2,5/10
[11]	3047170	End cover - D-UT 2,5/4-QUATTRO
[12]	3044102	Feed-through terminal block - UT 4
[13]	2775016	Feed-through terminal block - UDK 4
[14]	KN-TL-14	KONNECT IT 3 CIRCUIT TERMINAL BLOCK
[15]	KN-EC-TL	3 CIRCUIT TERMINAL BLOCK COVER
[16]	CDL4U(E)DD2	99321 ALTECH DIODE TERMINAL BLOCK
[17]	EPCDL4U	ALTECH DIODE TB END COVER

[1]
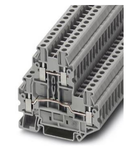

[7]

[13]

[2]

[8]

[14]

[3]

[9]

[15]

[4]

[10]

[16]

[5]

[11]

[17]

[6]

[12]

LT-EL-BL-EI-PPS-1280-93

LT-EL-BL-EI (DRAWING DIRECTORY)	LT-EL-BL-EI-PPS-1280-93 (DRAWING NUMBER)	D (REV)
COMPUTER REPRODUCABLE	SCALE: N/A	SHEET 27 OF 27

REV	DESCRIPTION	BY	DATE	CHK	APP
A	INITIAL RELEASE	SEJ	9-5-14	JM	SB
B	REVISED PER ECN LT-ECN-015-1104	SEJ	12/22/2014	JM	SB
c	REVISED PER ECN LT-ECN-015-1276	CG	8-31-15	JM	SB

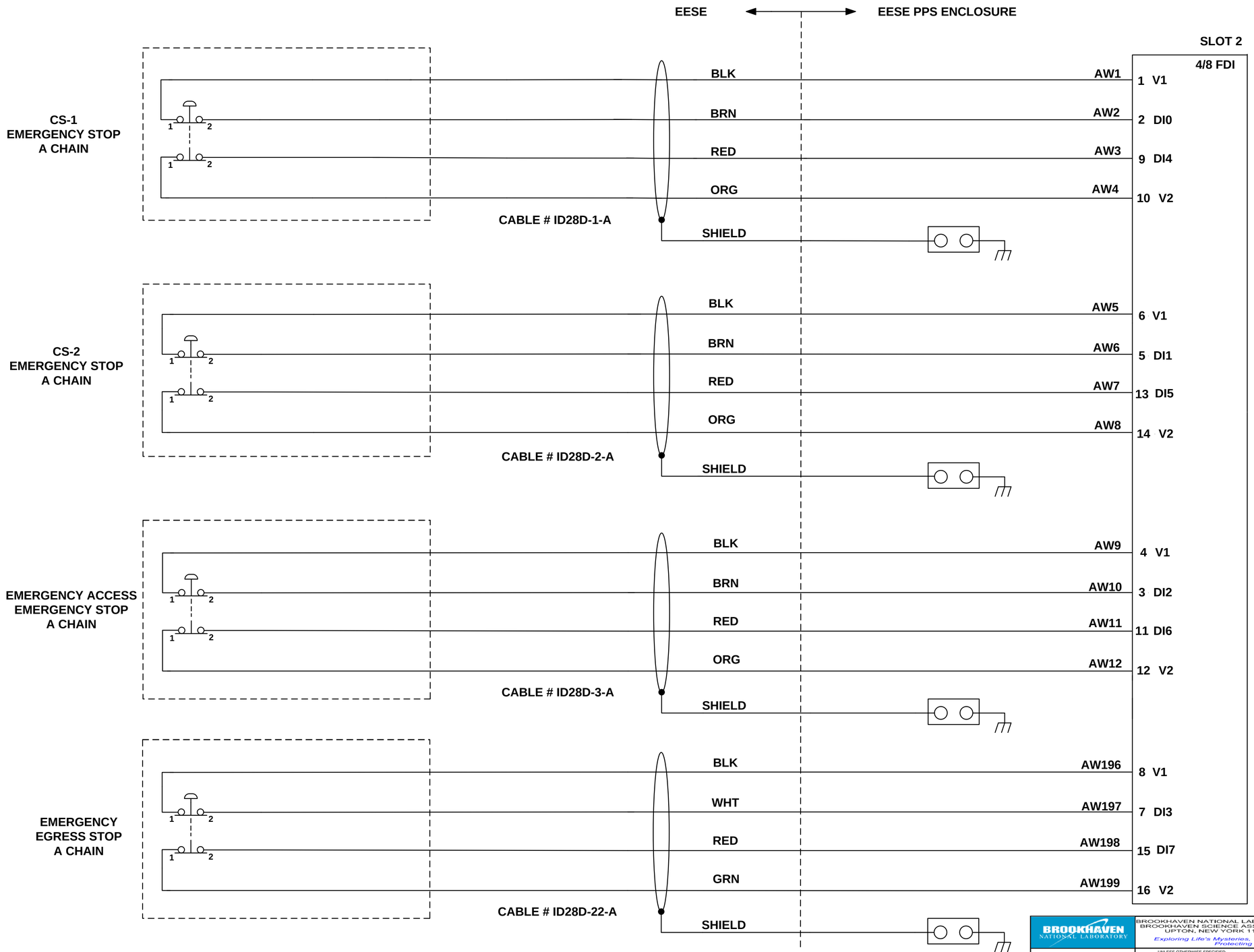

HIGHEST WIRE REF. DESIG. USED	
AW211	BW134

WIRE REF. DESIG. NOT USED
AW13 – AW21, AW38, AW51 – AW59,
AW68 – AW80, AW95-AW110, AW141,
AW144 – AW150, AW155 – AW160, AW195.
BW13 – BW21, BW38, BW53 – BW59,
BW91, BW95 – BW110, BW129, BW130.

A

LT-EL-BL-EI-PPS-1280-94

JOB NUMBER	USED ON DWG. NO.

BROOKHAVEN NATIONAL LABORATORY

UNLESS OTHERWISE SPECIFIED
INTEGER TOLERANCES ± .06
DECIMAL TOLERANCES
.X ± .030
.XX ± .015
.XXX ± .010
ANGULAR TOLERANCE ± 0.5°
UNSPECIFIED RADII .02 MAX
125 BREAK SHARP CORNERS AND EDGES
FINISH MAX .03 MIN .005

BROOKHAVEN NATIONAL LABORATORY
BROOKHAVEN SCIENCE ASSOCIATES
UPTON, NEW YORK 11973
Exploring Life's Mysteries, Protecting Its Future

UNLESS OTHERWISE SPECIFIED DIMENSIONS ARE IN INCHES
DIMENSIONS IN [*,**] ARE MILLIMETERS EQUIV. FOR REF. ONLY

ESH&Q RISK LEVEL A-1

INTERPRET DRAWING AS PER ANSI Y14.5 OR Y32.2

		DATE	OUTSTANDING ECN'S
DRWN BY	S. JARZABKOWSKI	9-5-14	
CHK BY	J.MALLEY	9-5-14	
ENG APP	S.BUDA	9-5-14	
SUPV APP	G.GANETIS	9-6-14	
QA APP	E.CHESWICK	9-5-14	
ESH APP	B. LEE	9-5-14	

NSLSII NATIONAL SYNCHROTRON LIGHT SOURCE II

WIRING DIAGRAM
ID28-D (XPD-D)
A CHAIN AND B CHAIN

LT-EL-BL-EI	LT-EL-BL-EI-PPS-1280-94	C
DRAWING DIRECTORY	DRAWING NUMBER	REV

COMPUTER REPRODUCIBLE | SCALE: N/A | SHEET 1 OF 26

REV	DESCRIPTION	BY	DATE	CHK	APP
	SEE SHEET 1				

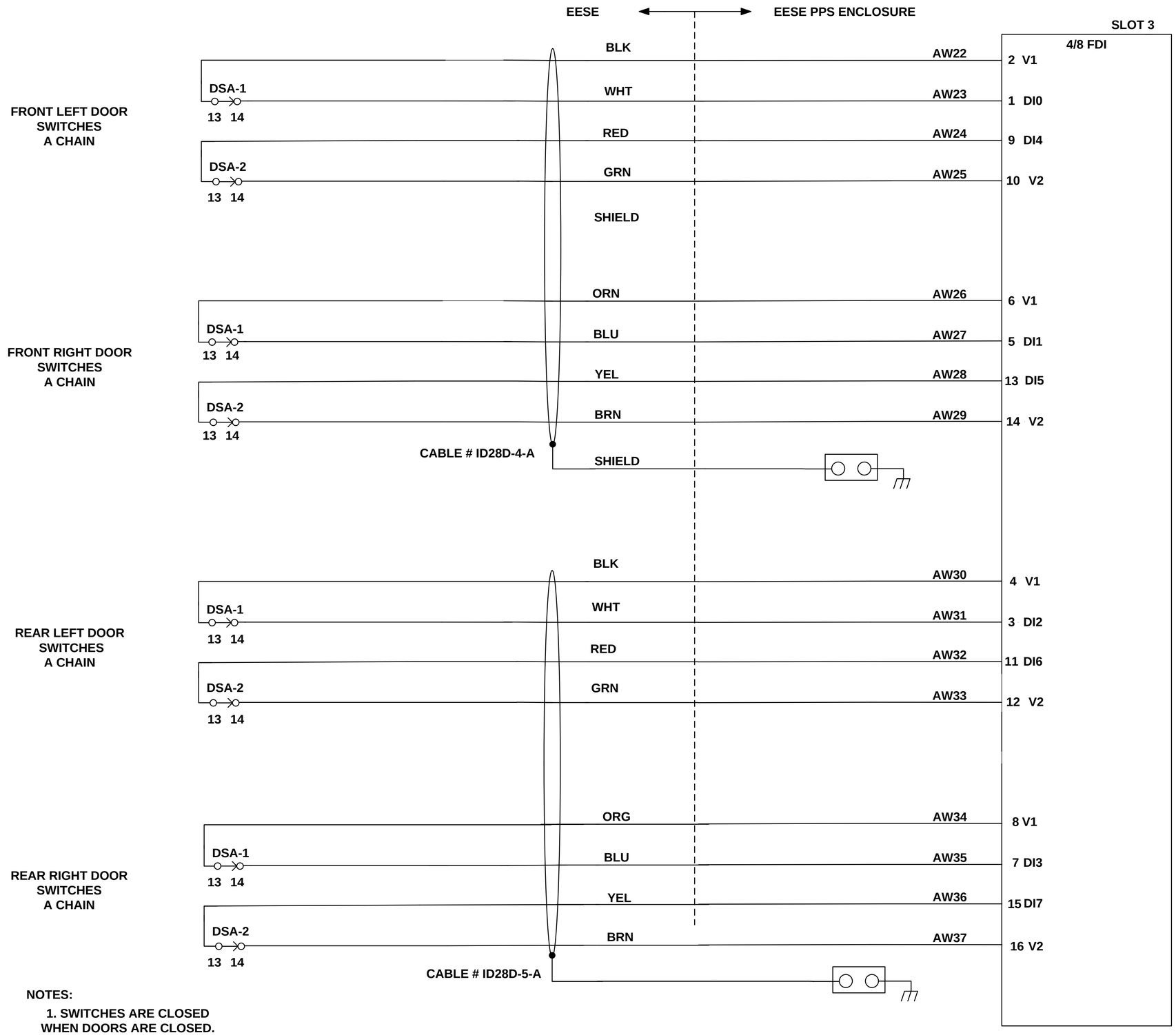

NOTES:

1. SWITCHES ARE CLOSED WHEN DOORS ARE CLOSED.

A

LT-EL-BL-EI-PPS-1280-94

LT-EL-BL-EI (DRAWING DIRECTORY)	LT-EL-BL-EI-PPS-1280-94 (DRAWING NUMBER)	C (REV)
COMPUTER REPRODUCIBLE	SCALE: N/A	SHEET 2 OF 26

REV	DESCRIPTION	BY	DATE	CHK	APP
	SEE SHEET 1				

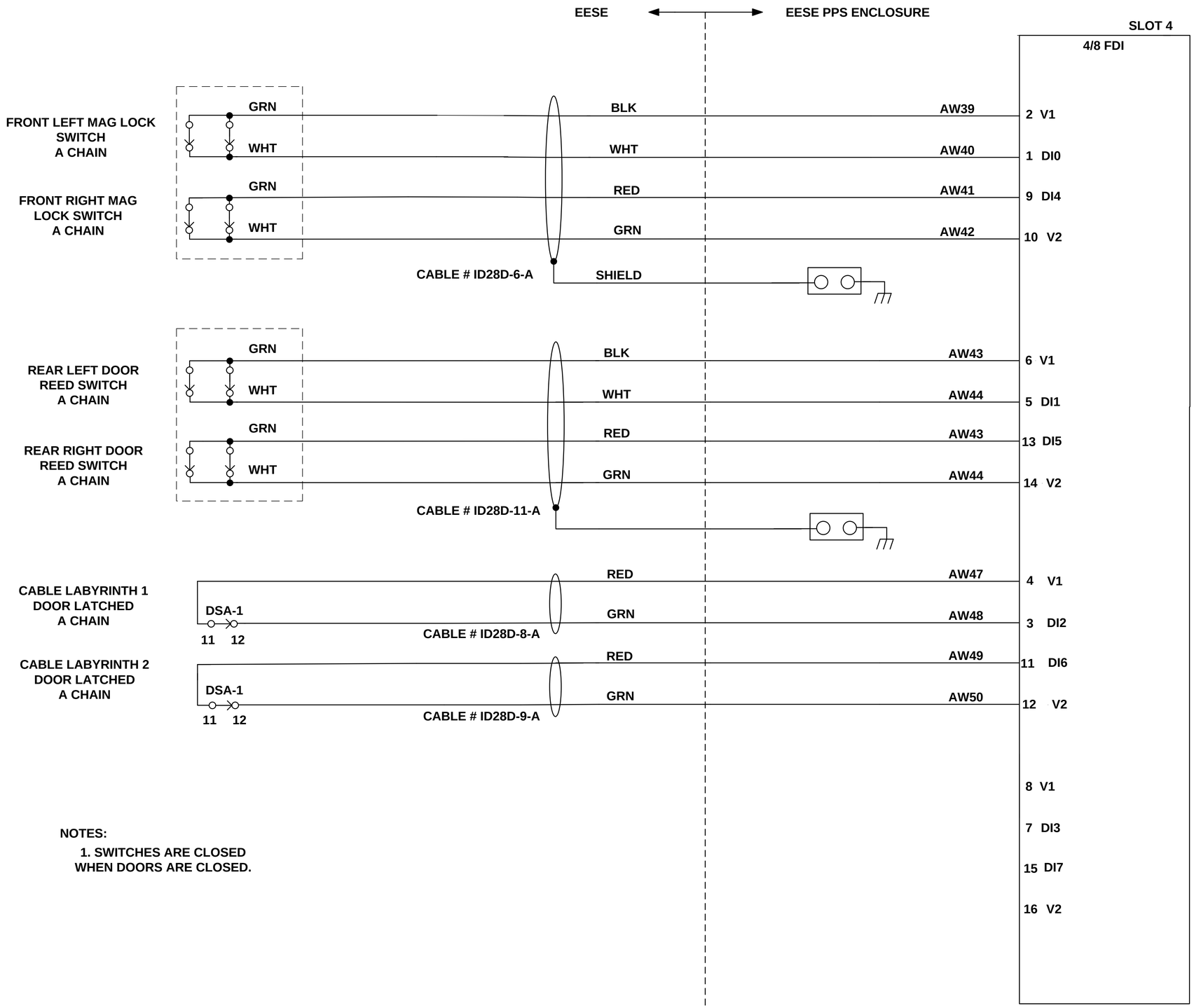

NOTES:

1. SWITCHES ARE CLOSED WHEN DOORS ARE CLOSED.

LT-EL-BL-EI-PPS-1280-94

A

LT-EL-BL-EI (DRAWING DIRECTORY)	LT-EL-BL-EI-PPS-1280-94 (DRAWING NUMBER)	C (REV)
COMPUTER REPRODUCIBLE	SCALE: N/A	SHEET 3 OF 26

REV	DESCRIPTION	BY	DATE	CHK	APP
	SEE SHEET 1				

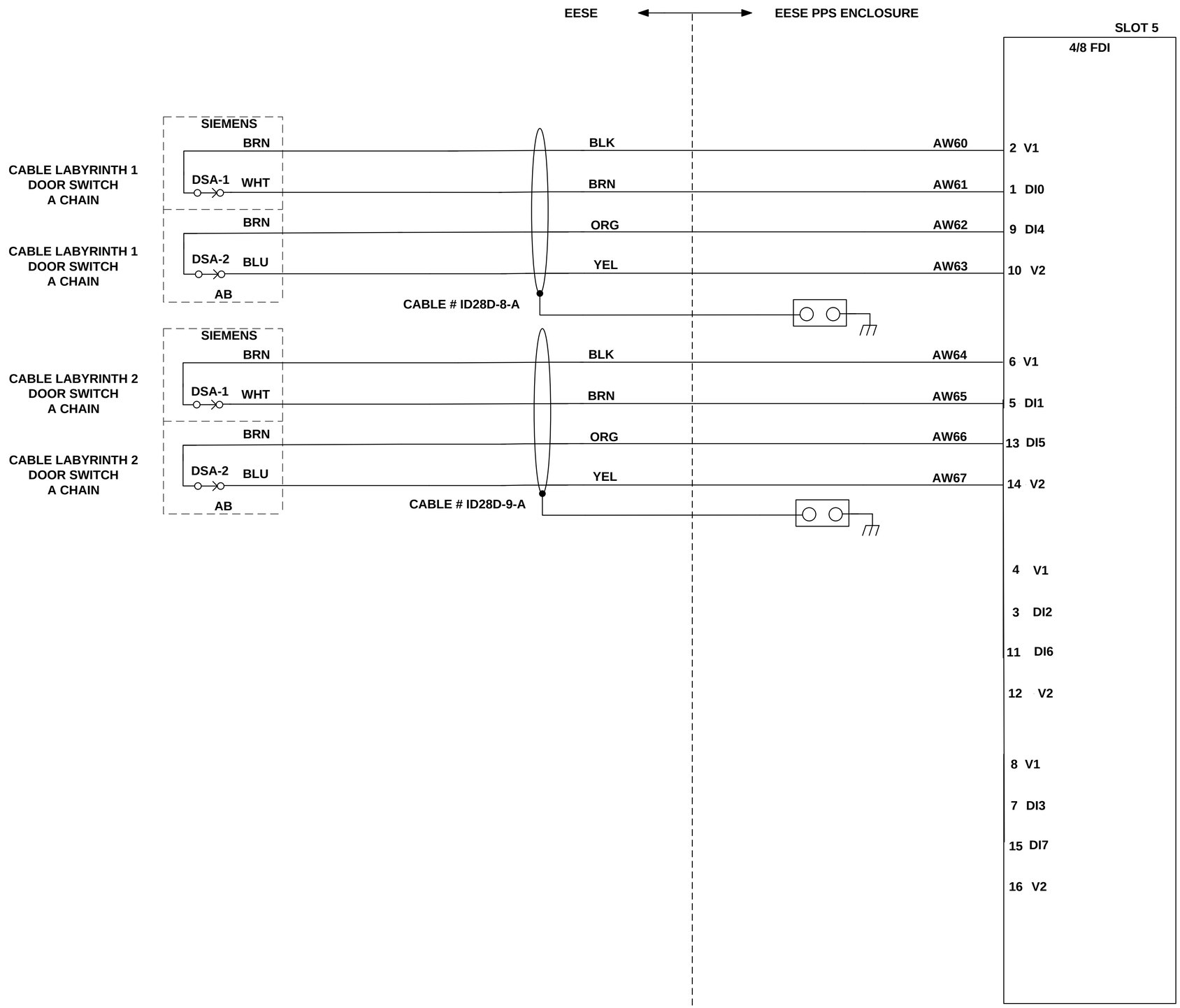

LT-EL-BL-EI-PPS-1280-94

A

LT-EL-BL-EI	LT-EL-BL-EI-PPS-1280-94	C
DRAWING DIRECTORY	DRAWING NUMBER	REV
COMPUTER REPRODUCIBLE	SCALE: N/A	SHEET 4 OF 26

REV	DESCRIPTION	BY	DATE	CHK	APP
	SEE SHEET 1				

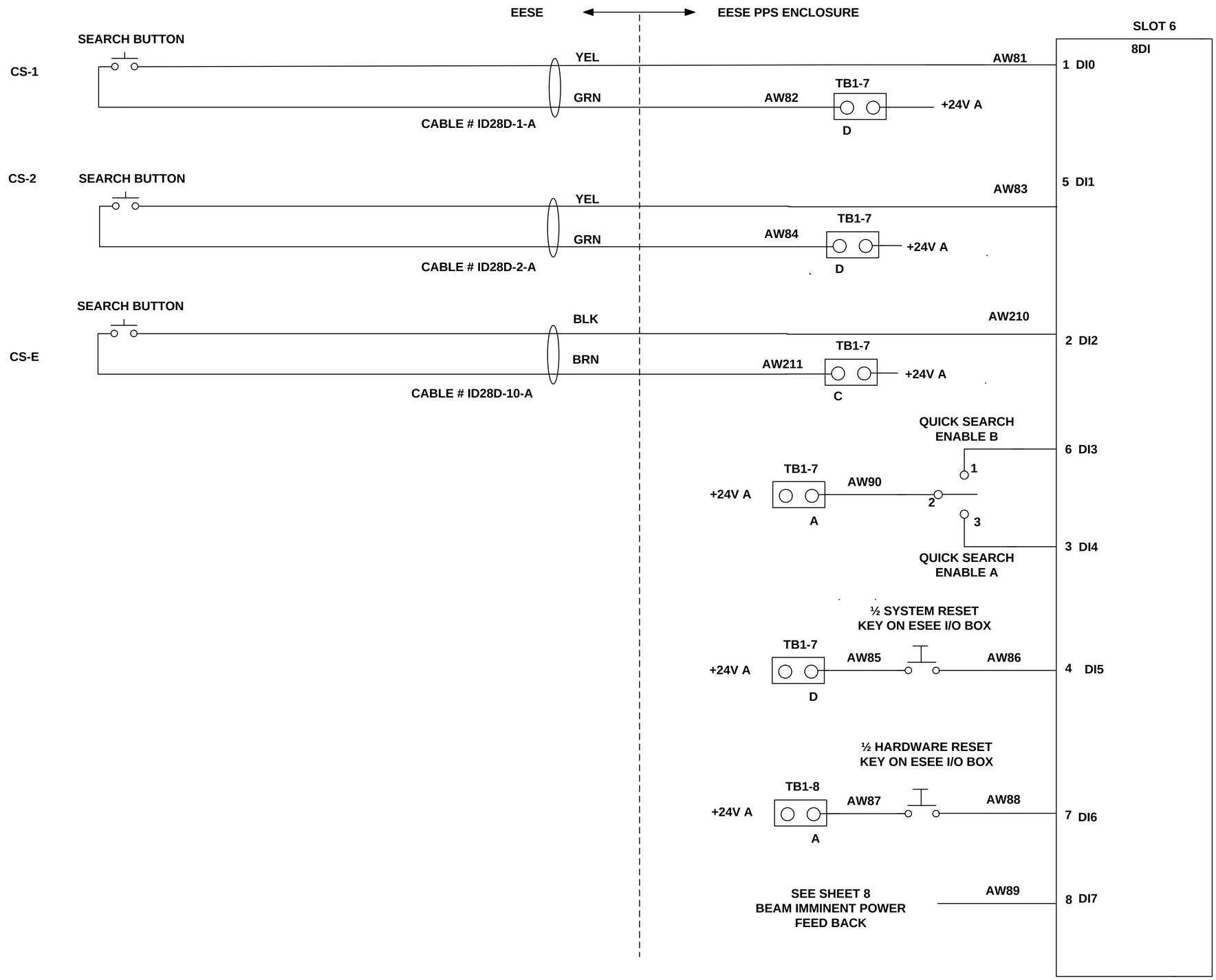

A

LT-EL-BL-EI-PPS-1280-94

LT-EL-BL-EI DRAWING DIRECTORY	LT-EL-BL-EI-PPS-1280-94 DRAWING NUMBER	C REV
COMPUTER REPRODUCIBLE	SCALE: N/A	SHEET 5 OF 26

REV	DESCRIPTION	BY	DATE	CHK	APP
A	SEE SHEET 1	CG			

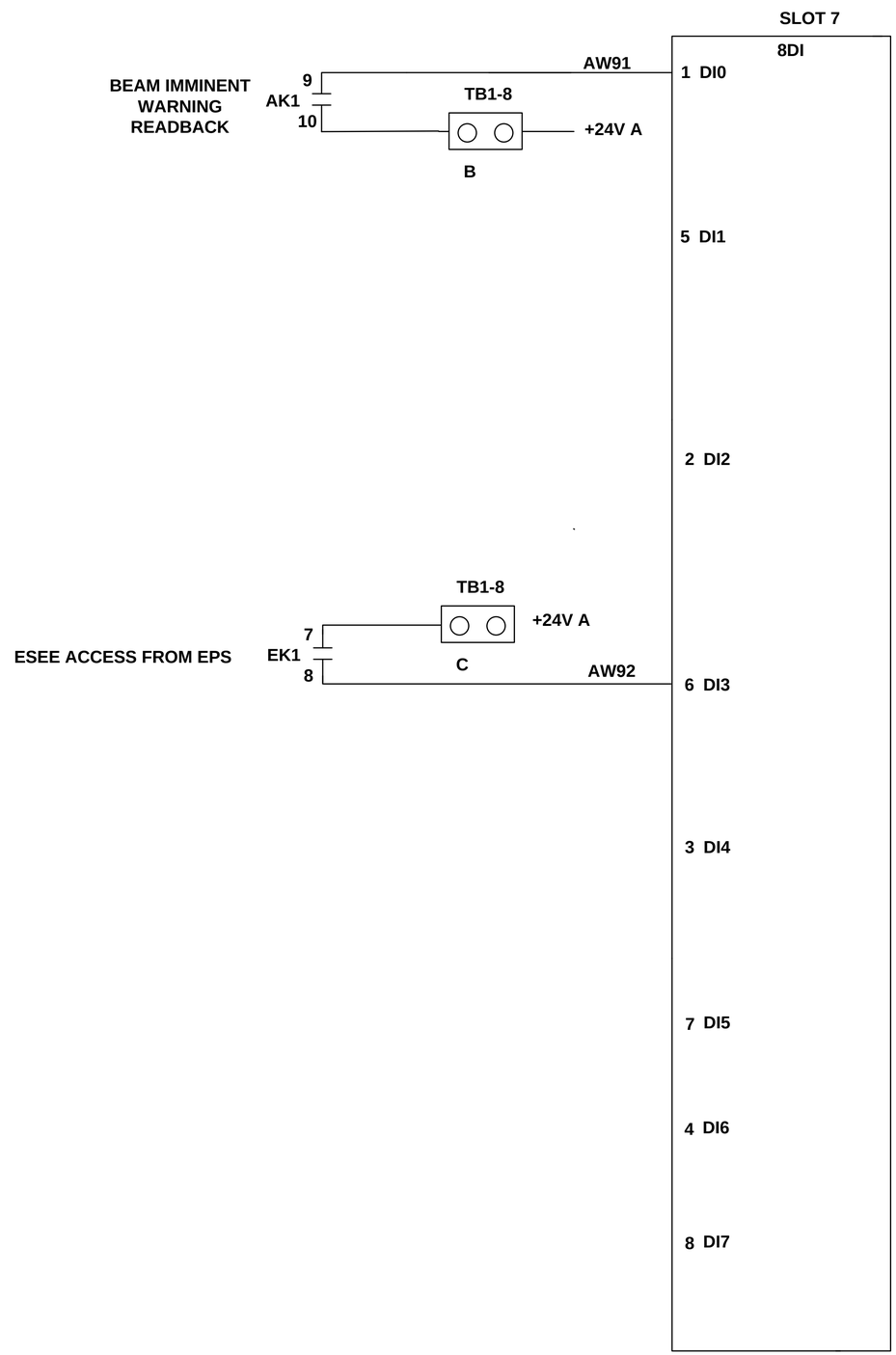

A

LT-EL-BL-EI-PPS-1280-94

LT-EL-BL-EI (DRAWING DIRECTORY)	LT-EL-BL-EI-PPS-1280-94 (DRAWING NUMBER)	C (REV)
COMPUTER REPRODUCIBLE	SCALE: N/A	SHEET 6 OF 26

REV	DESCRIPTION	BY	DATE	CHK	APP
	SEE SHEET 1				

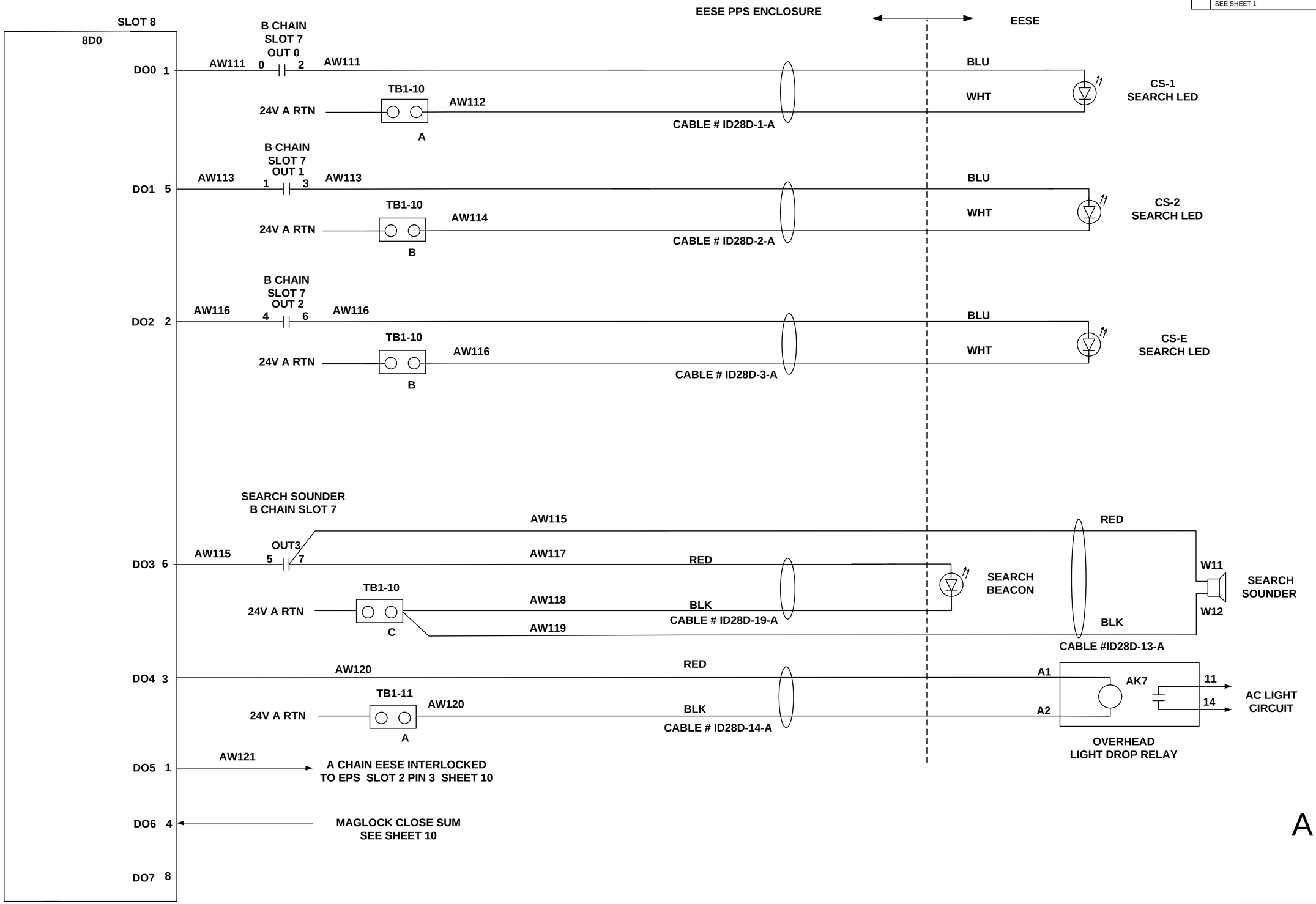

A

LT-EL-BL-EI-PPS-1280-94

LT-EL-BL-EI	LT-EL-BL-EI-PPS-1280-94	C
DRAWING DIRECTORY	DRAWING NUMBER	REV
COMPUTER REPRODUCIBLE	SCALE: N/A	SHEET 7 OF 26

REV	DESCRIPTION	BY	DATE	CHK	APP
	SEE SHEET 1				

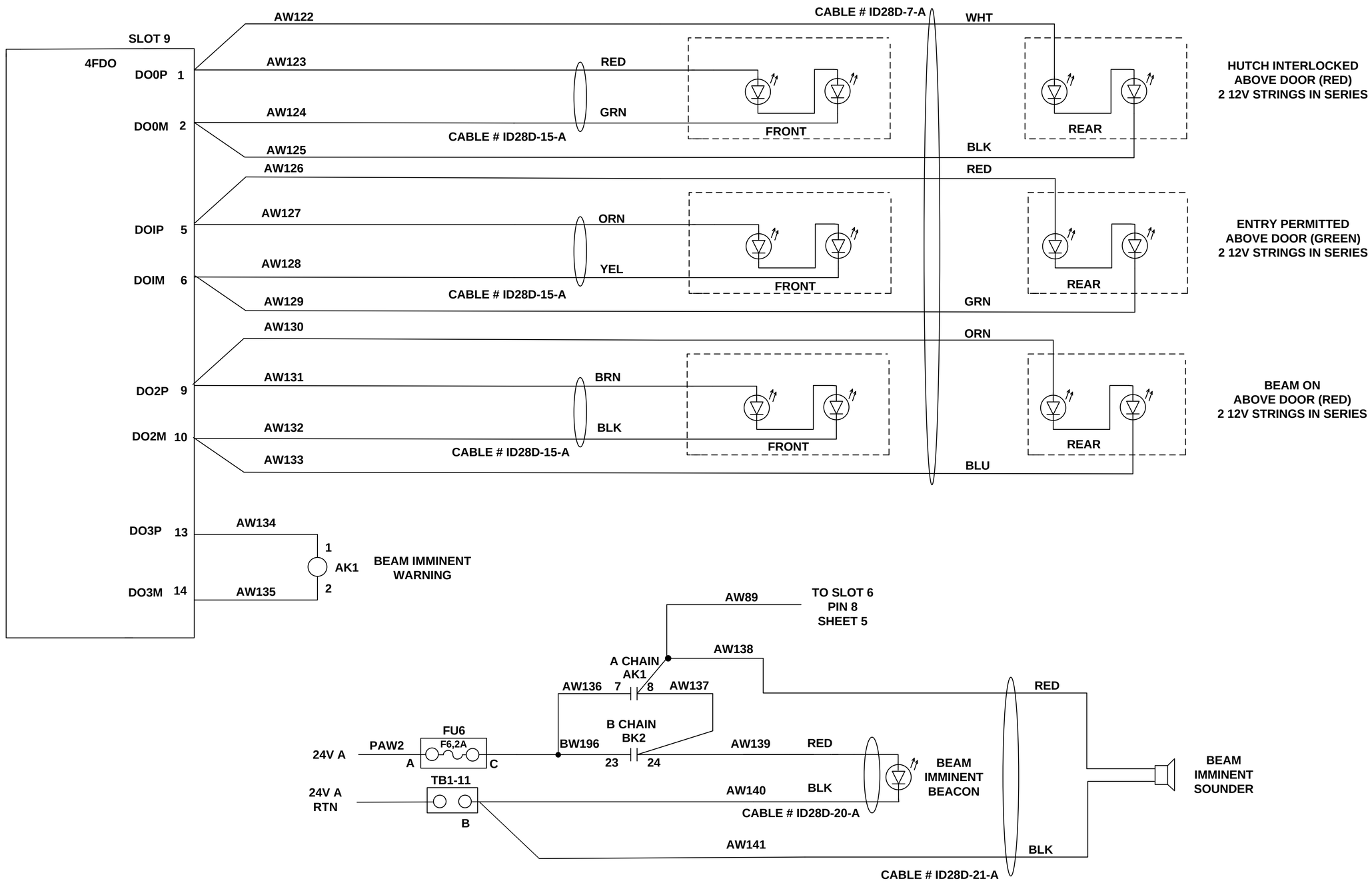

A

LT-EL-BL-EI-PPS-1280-94

LT-EL-BL-EI (DRAWING DIRECTORY)	LT-EL-BL-EI-PPS-1280-94 (DRAWING NUMBER)	C (REV)
COMPUTER REPRODUCIBLE	SCALE: N/A	SHEET 8 OF 26

REV	DESCRIPTION	BY	DATE	CHK	APP
	SEE SHEET 1				

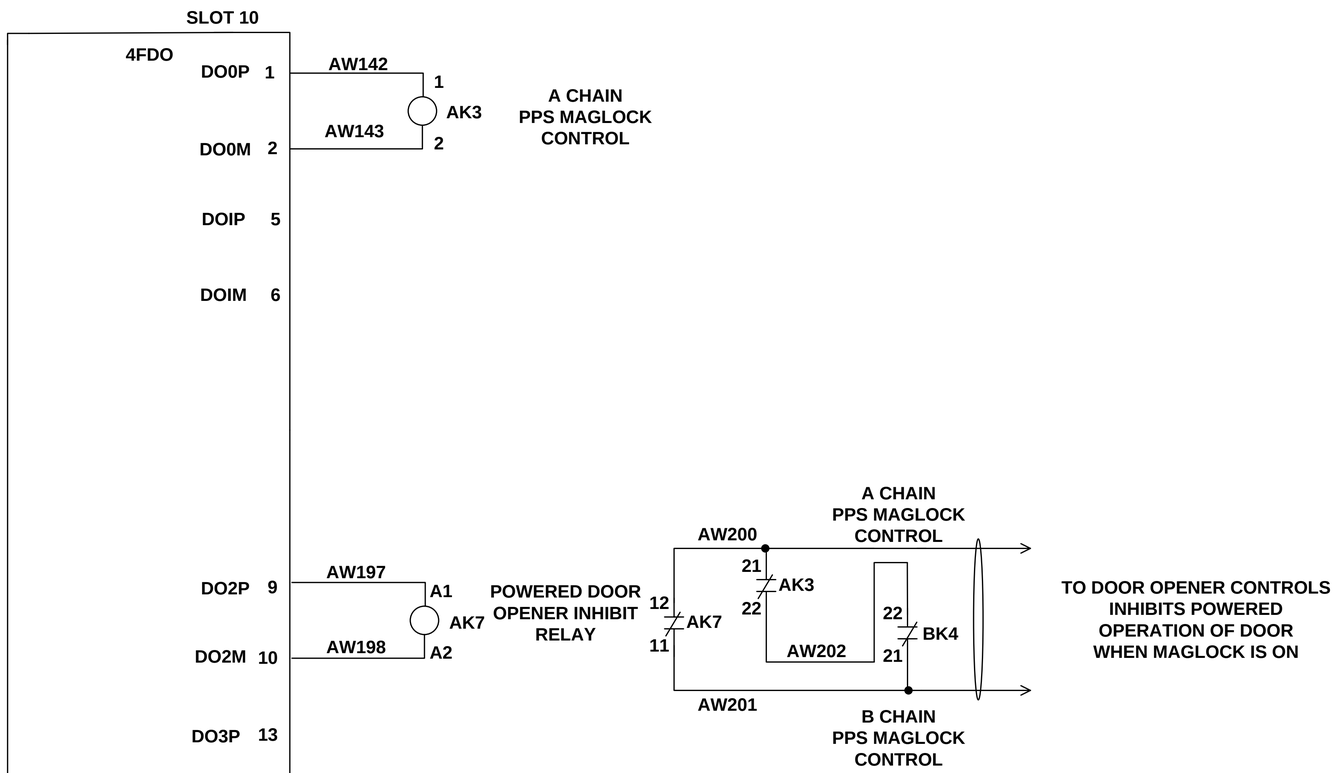

LT-EL-BL-EI-PPS-1280-94

A

LT-EL-BL-EI DRAWING DIRECTORY	LT-EL-BL-EI-PPS-1280-94 DRAWING NUMBER	C REV
COMPUTER REPRODUCIBLE	SCALE: N/A	SHEET 9 OF 26

REV	DESCRIPTION	BY	DATE	CHK	APP
	SEE SHEET 1				

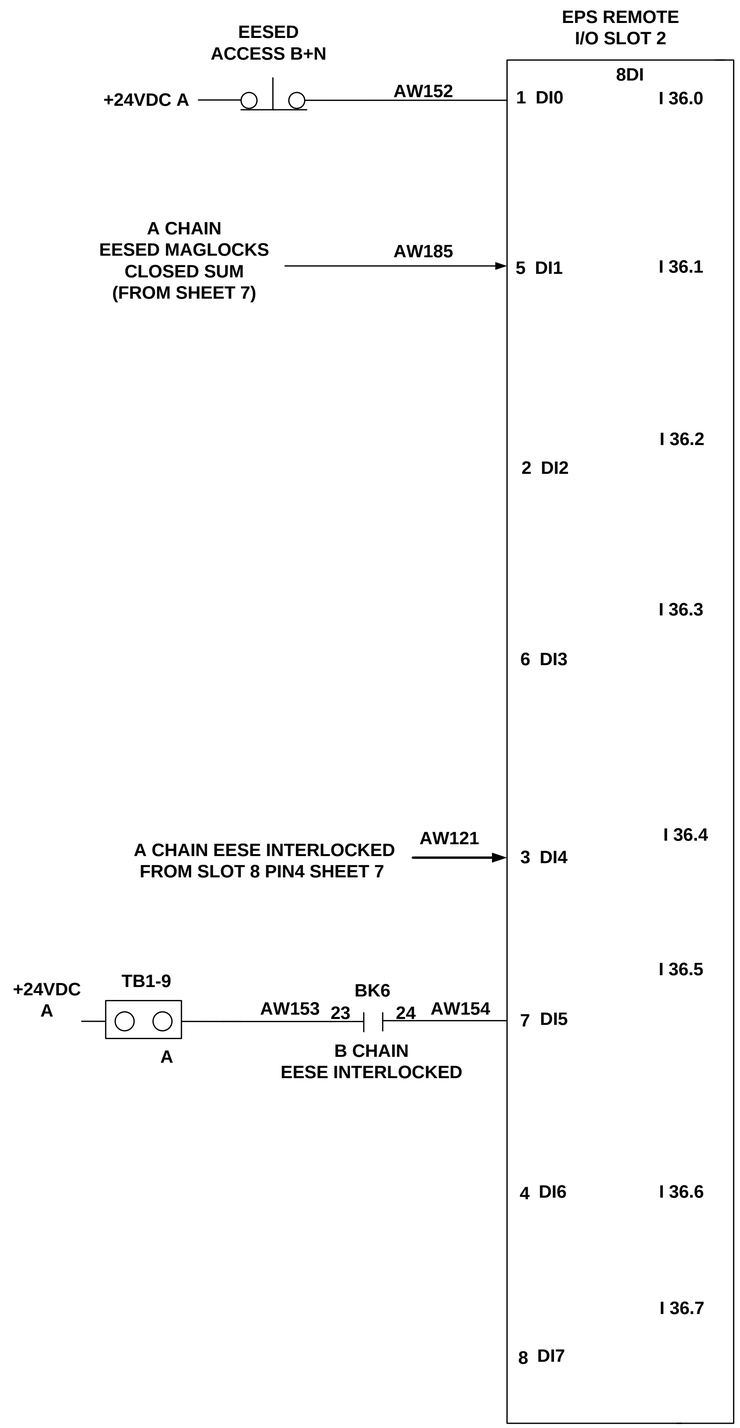

A

LT-EL-BL-EI-PPS-1280-94

LT-EL-BL-EI	LT-EL-BL-EI-PPS-1280-94	C
DRAWING DIRECTORY	DRAWING NUMBER	REV

COMPUTER REPRODUCIBLE | SCALE: N/A | SHEET 10 OF 26

REV	DESCRIPTION	BY	DATE	CHK	APP
	SEE SHEET 1				

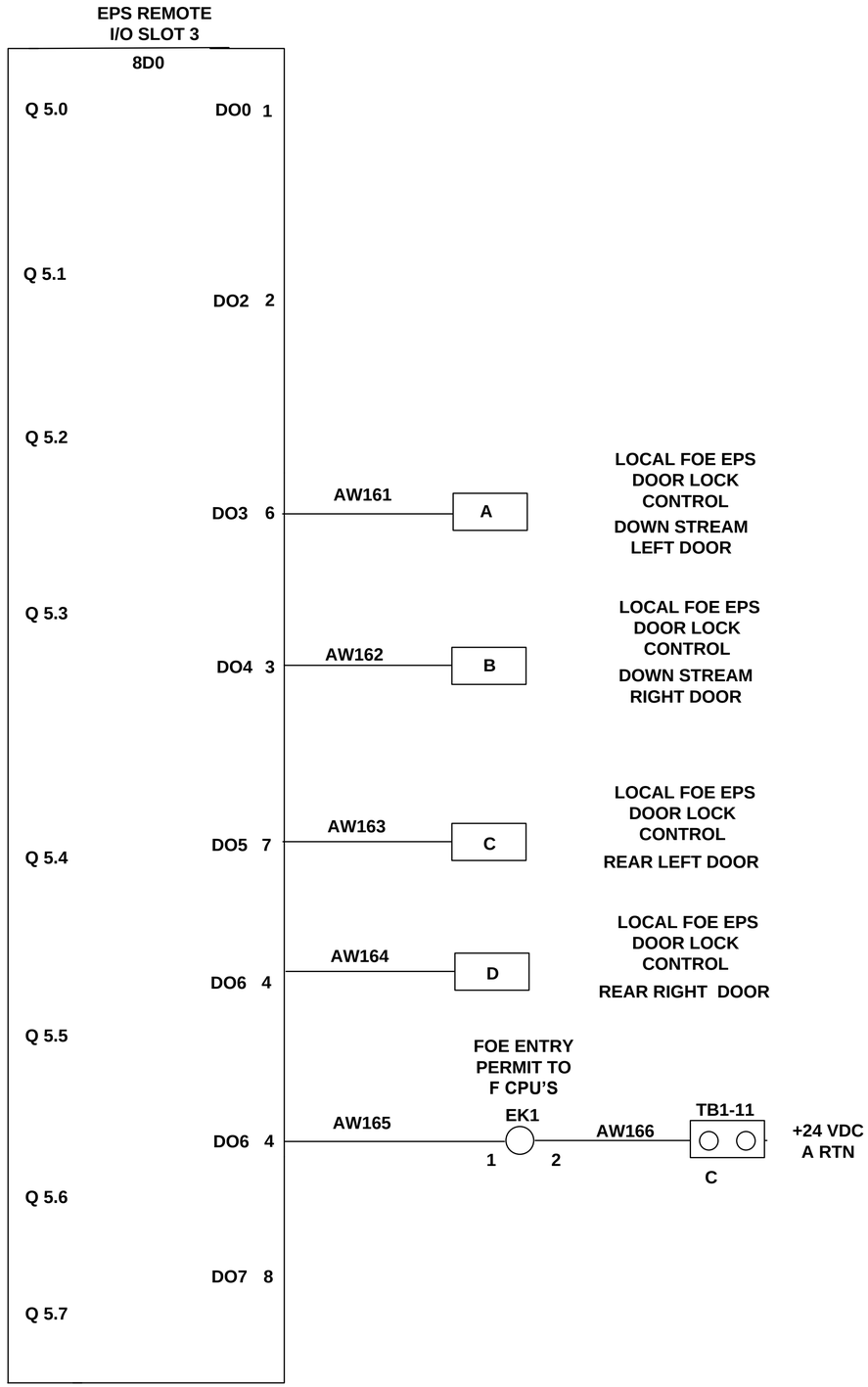

A

LT-EL-BL-EI-PPS-1280-94

LT-EL-BL-EI	LT-EL-BL-EI-PPS-1280-94	C
DRAWING DIRECTORY	DRAWING NUMBER	REV

COMPUTER REPRODUCIBLE | SCALE: N/A | SHEET 11 OF 26

REV	DESCRIPTION	BY	DATE	CHK	APP
	SEE SHEET 1				

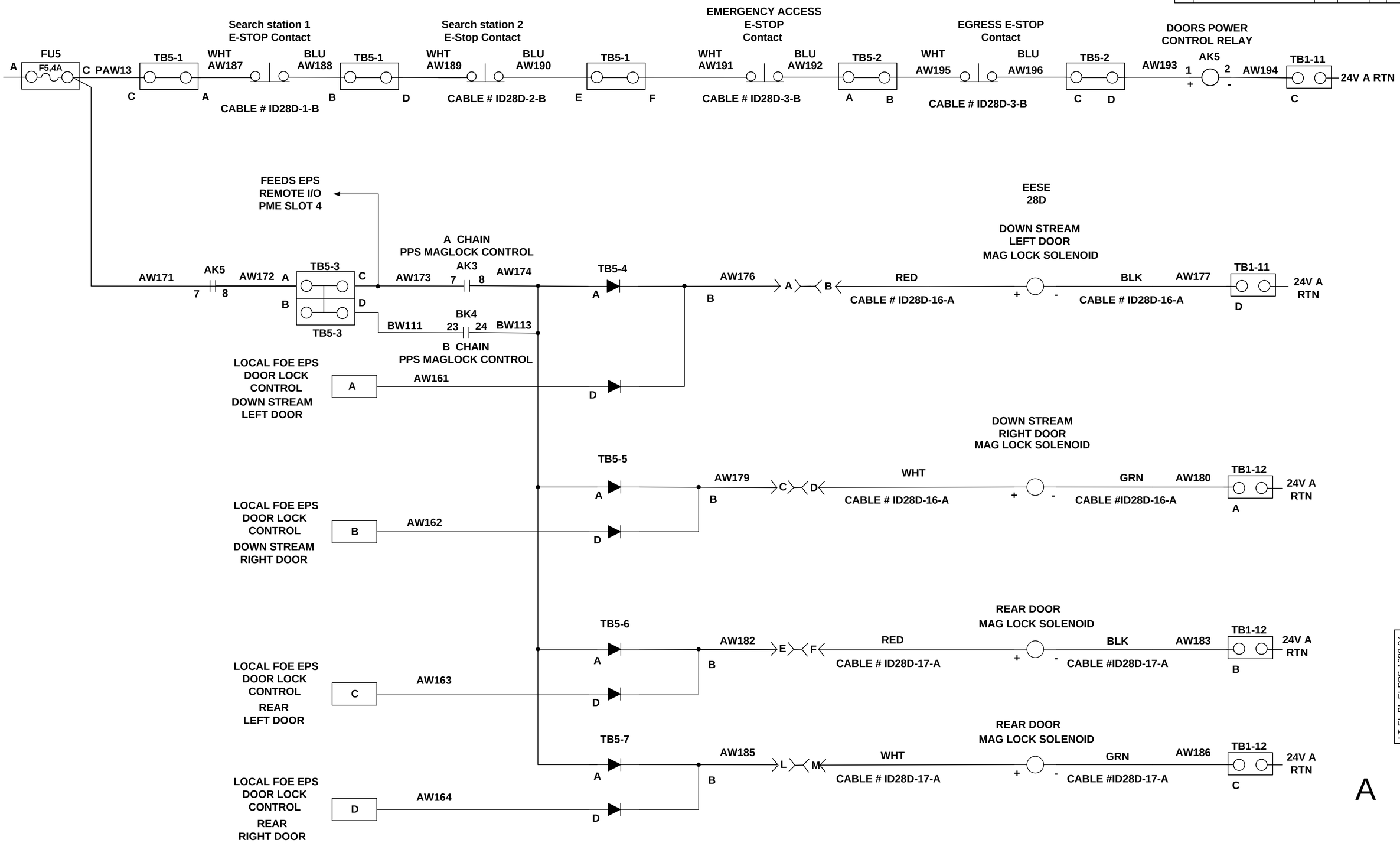

A

LT-EL-BL-EI-PPS-1280-94

LT-EL-BL-EI	LT-EL-BL-EI-PPS-1280-94	C
DRAWING DIRECTORY	DRAWING NUMBER	REV
COMPUTER REPRODUCIBLE	SCALE: N/A	SHEET 12 OF 26

REV	DESCRIPTION	BY	DATE	CHK	APP
	SEE SHEET 1				

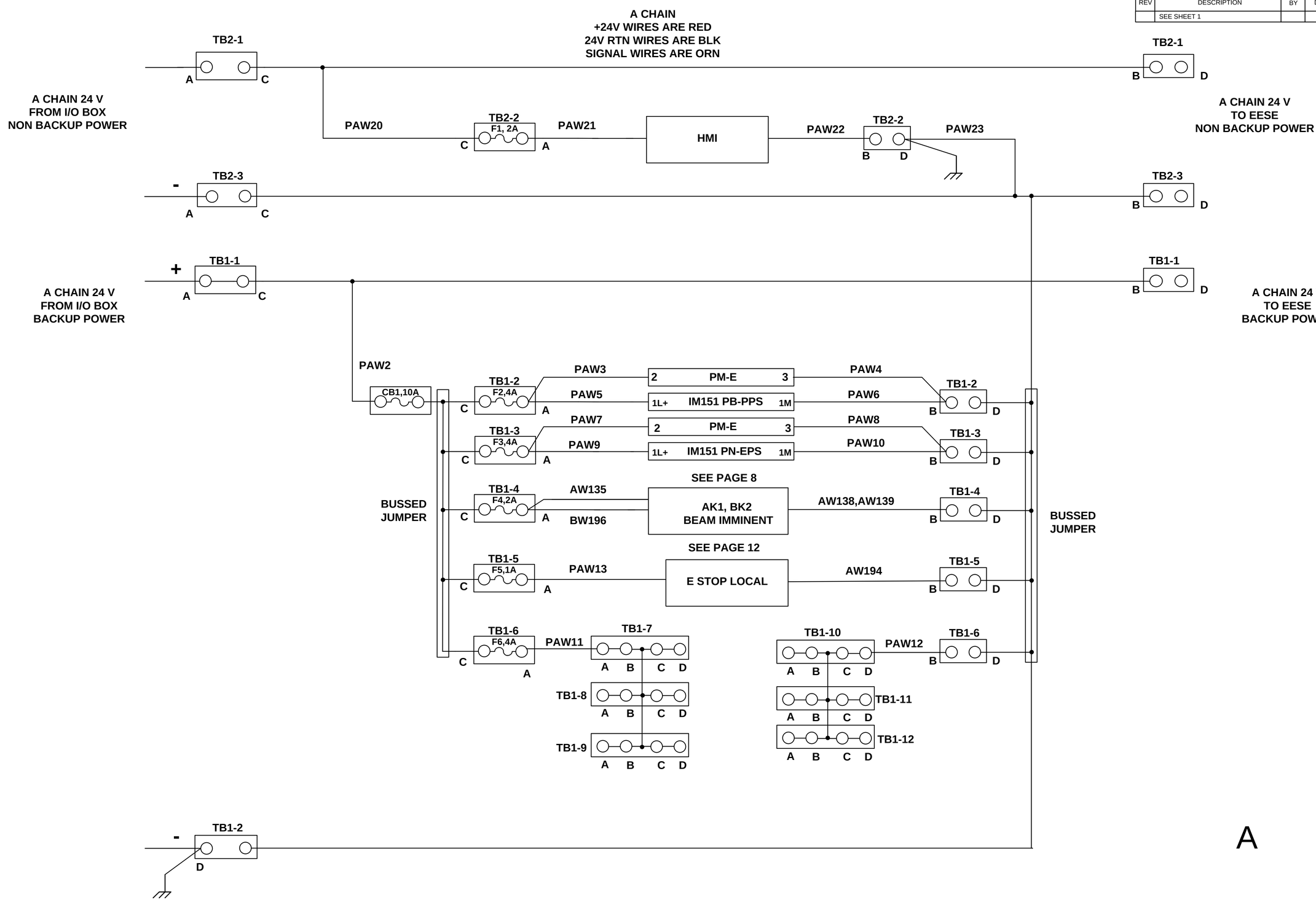

A

LT-EL-BL-EI	LT-EL-BL-EI-PPS-1280-94	C
DRAWING DIRECTORY	DRAWING NUMBER	REV
COMPUTER REPRODUCIBLE	SCALE: N/A	SHEET 13 OF 26

LT-EL-BL-EI-PPS-1280-94

REV	DESCRIPTION	BY	DATE	CHK	APP
	SEE SHEET 1				

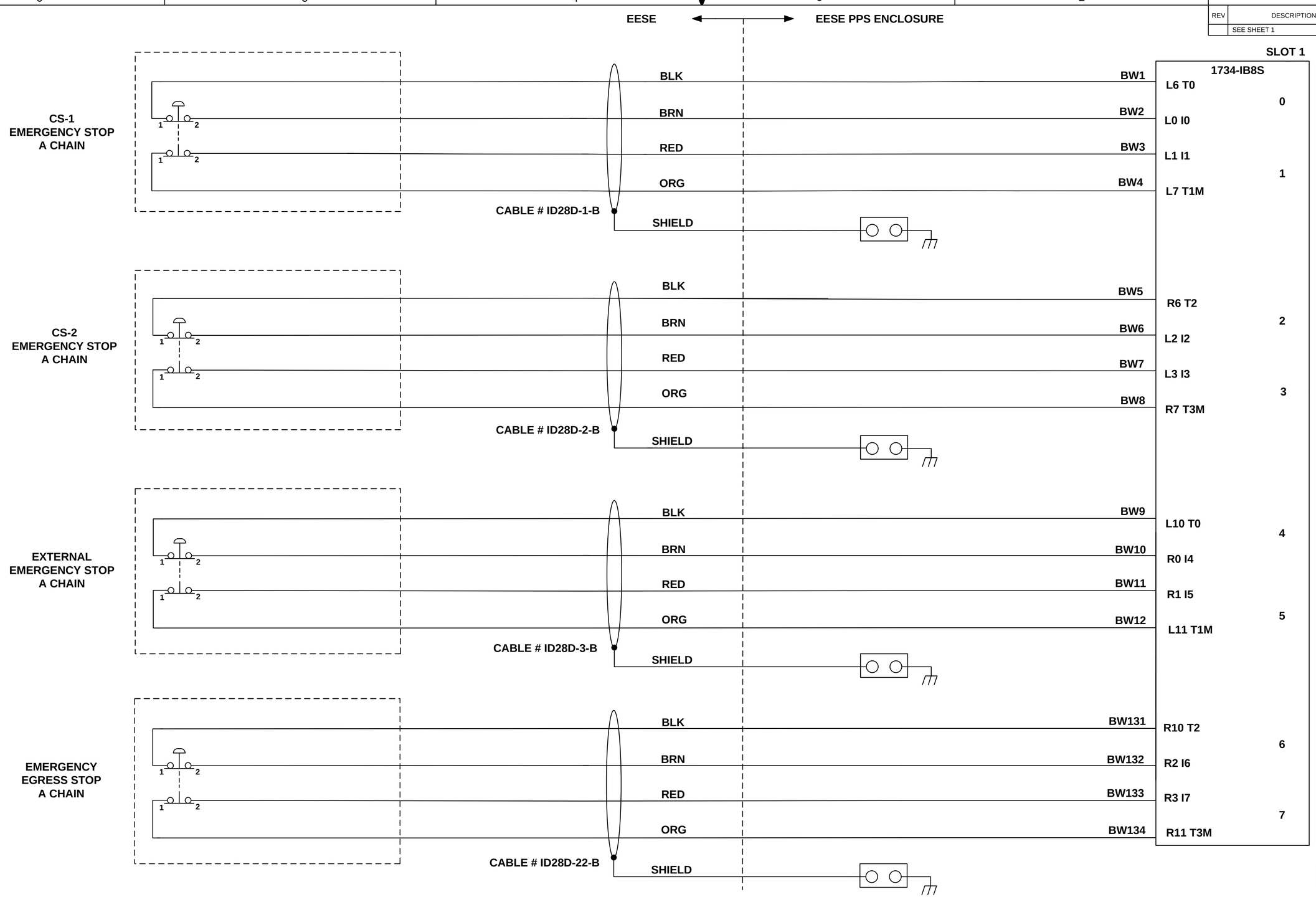

LT-EL-BL-EI-PPS-1280-94

LT-EL-BL-EI (DRAWING DIRECTORY)	LT-EL-BL-EI-PPS-1280-94 (DRAWING NUMBER)	C (REV)
COMPUTER REPRODUCIBLE	SCALE: N/A	SHEET 14 OF 26

REV	DESCRIPTION	BY	DATE	CHK	APP
	SEE SHEET 1				

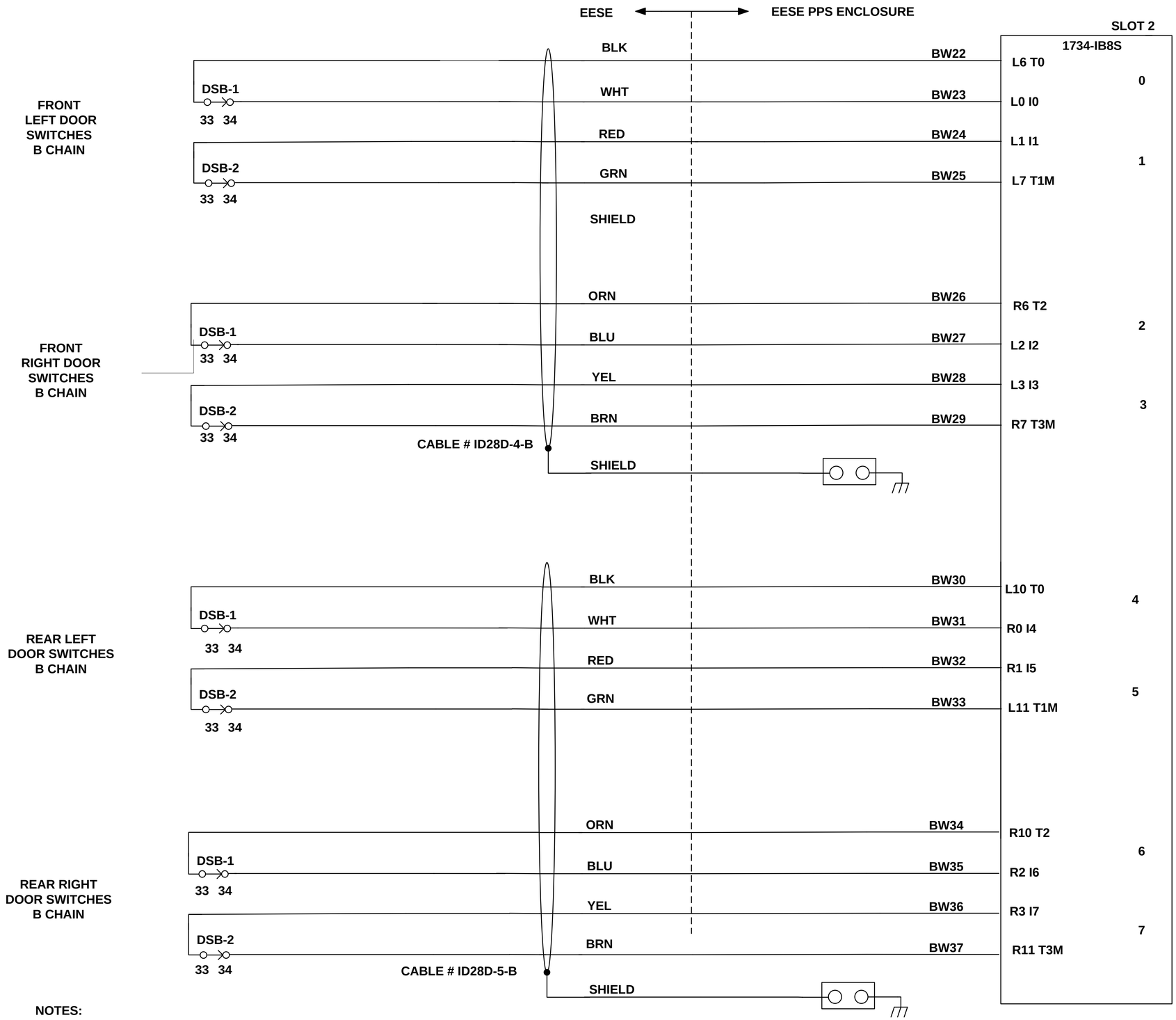

NOTES:

1. SWITCHES ARE IN CLOSED POSITION.

B

LT-EL-BL-EI-PPS-1280-94

LT-EL-BL-EI	LT-EL-BL-EI-PPS-1280-94	C
DRAWING DIRECTORY	DRAWING NUMBER	REV
COMPUTER REPRODUCIBLE	SCALE: N/A	SHEET 15 OF 26

REV	DESCRIPTION	BY	DATE	CHK	APP
	SEE SHEET 1				

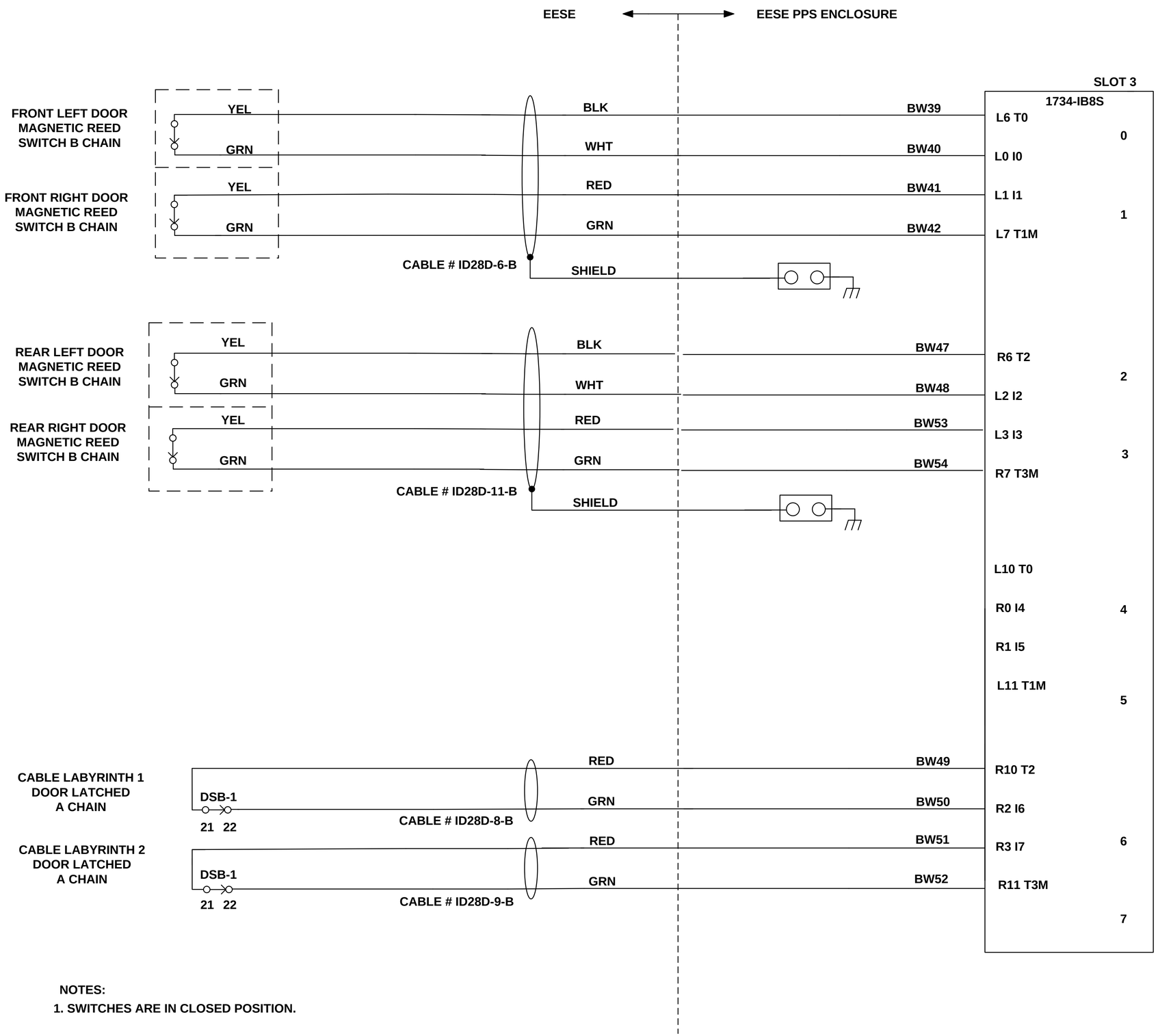

NOTES:

1. SWITCHES ARE IN CLOSED POSITION.

B

LT-EL-BL-EI-PPS-1280-94

LT-EL-BL-EI (DRAWING DIRECTORY)	LT-EL-BL-EI-PPS-1280-94 (DRAWING NUMBER)	C (REV)
COMPUTER REPRODUCIBLE	SCALE: N/A	SHEET 16 OF 26

REV	DESCRIPTION	BY	DATE	CHK	APP
	SEE SHEET 1				

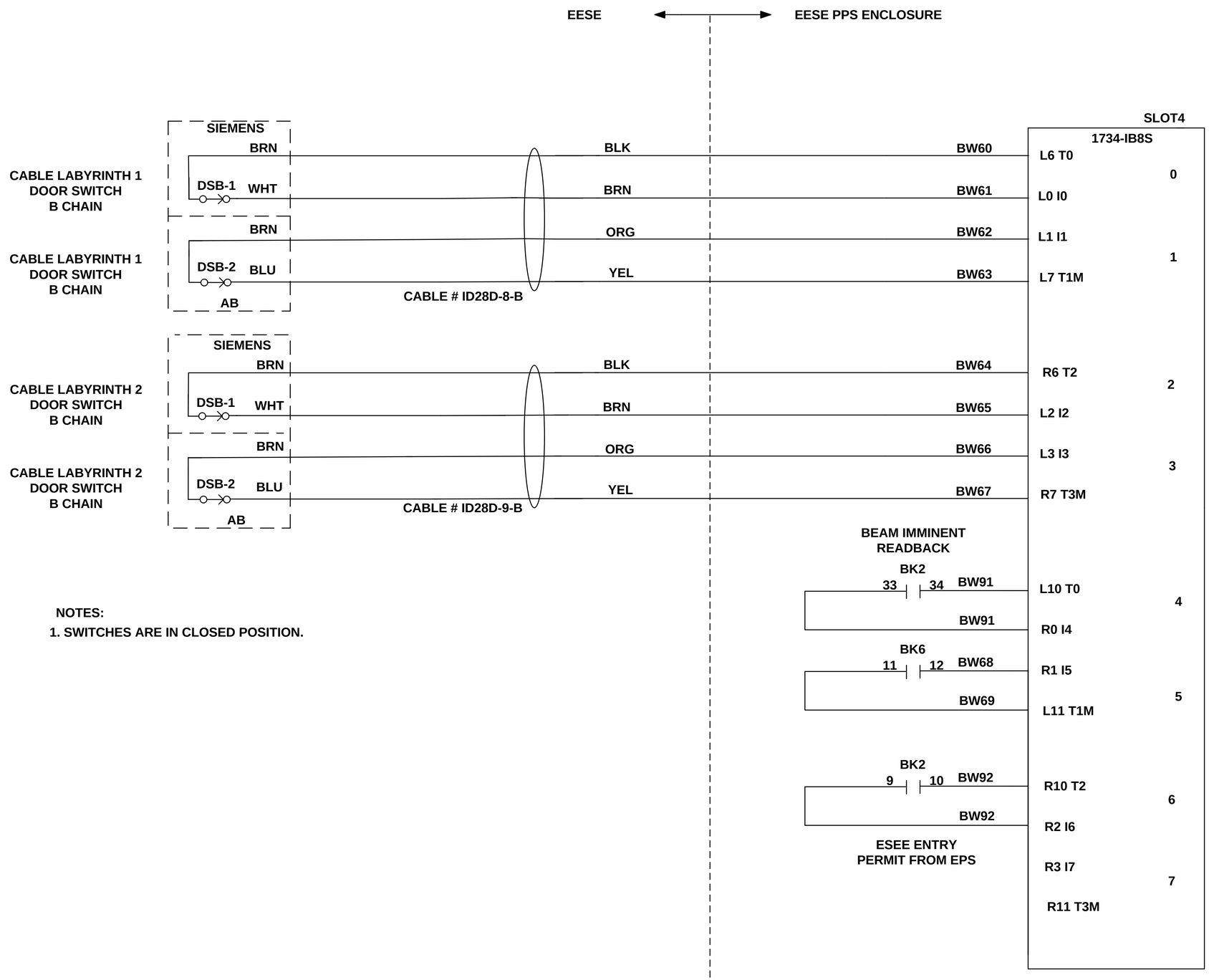

NOTES:

1. SWITCHES ARE IN CLOSED POSITION.

B

LT-EL-BL-EI (DRAWING DIRECTORY)	LT-EL-BL-EI-PPS-1280-94 (DRAWING NUMBER)	C (REV)
COMPUTER REPRODUCIBLE	SCALE: N/A	SHEET 17 OF 26

LT-EL-BL-EI-PPS-1280-94

REV	DESCRIPTION	BY	DATE	CHK	APP
	SEE SHEET 1				

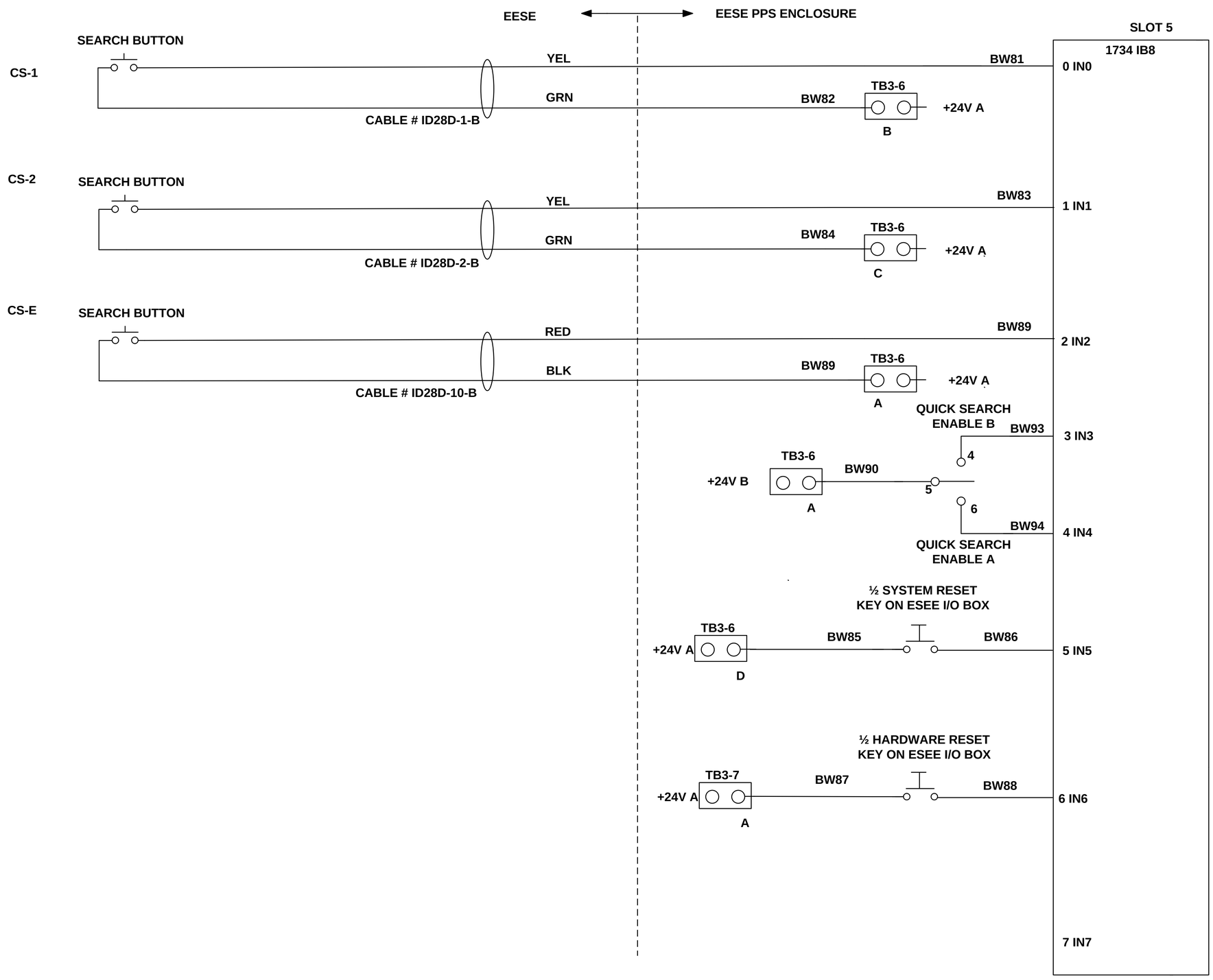

B

LT-EL-BL-EI-PPS-1280-94

LT-EL-BL-EI	LT-EL-BL-EI-PPS-1280-94	C
DRAWING DIRECTORY	DRAWING NUMBER	REV
COMPUTER REPRODUCIBLE	SCALE: N/A	SHEET 18 OF 26

REV	DESCRIPTION	BY	DATE	CHK	APP
	SEE SHEET 1				

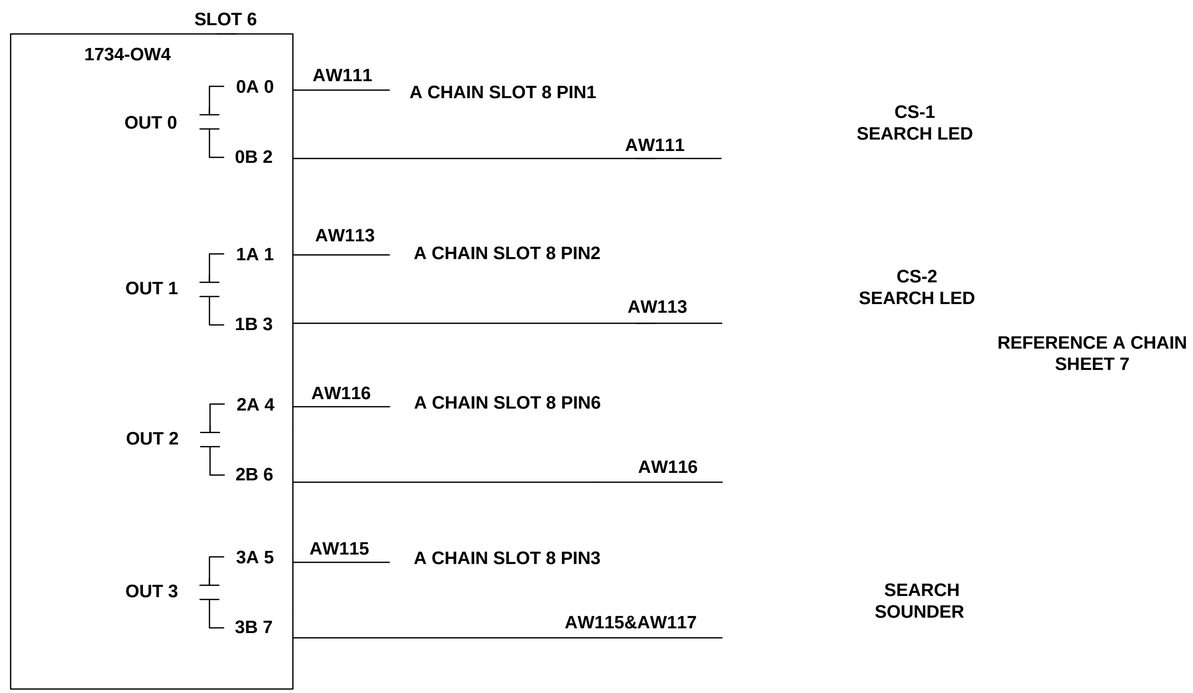

LT-EL-BL-EI-PPS-1280-94

B

LT-EL-BL-EI	LT-EL-BL-EI-PPS-1280-94	C
DRAWING DIRECTORY	DRAWING NUMBER	REV
COMPUTER REPRODUCIBLE	SCALE: N/A	SHEET 19 OF 26

REV	DESCRIPTION	BY	DATE	CHK	APP
	SEE SHEET 1				

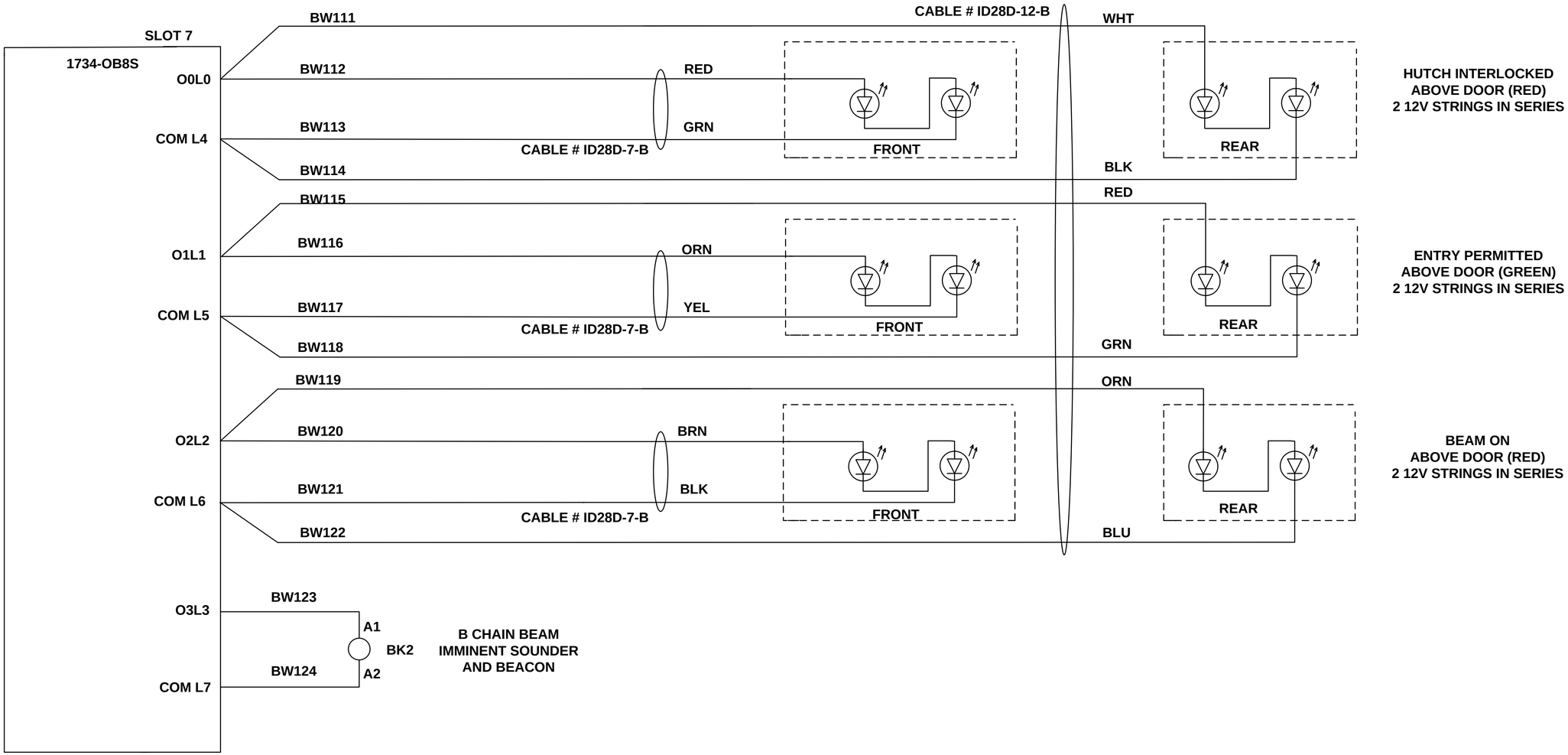

LT-EL-BL-EI-PPS-1280-94

B

LT-EL-BL-EI (DRAWING DIRECTORY)	LT-EL-BL-EI-PPS-1280-94 (DRAWING NUMBER)	C (REV)
COMPUTER REPRODUCIBLE	SCALE: N/A	SHEET 20 OF 26

REV	DESCRIPTION	BY	DATE	CHK	APP
	SEE SHEET 1				

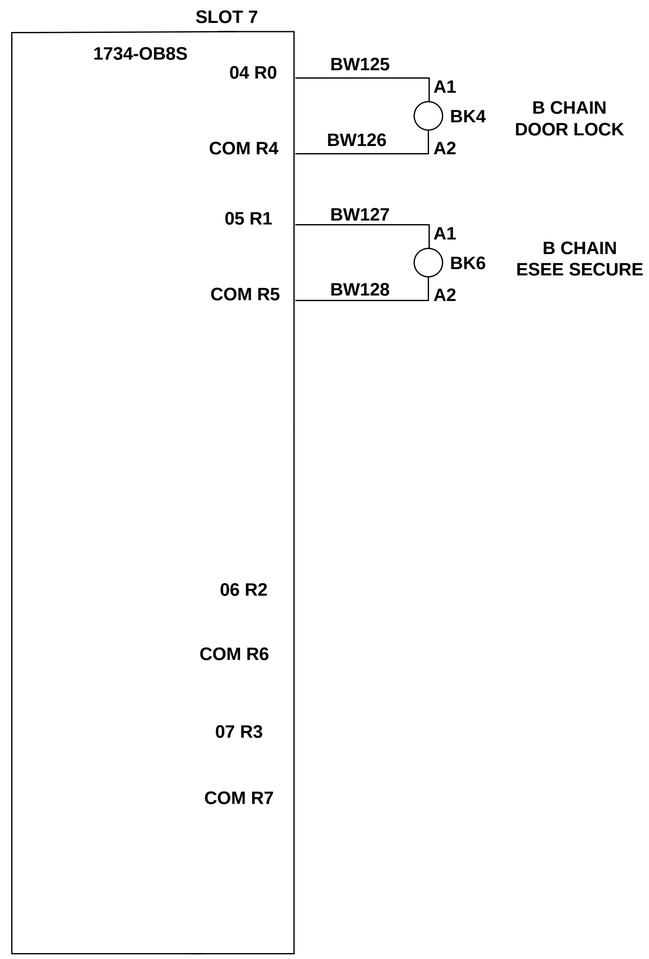

B

LT-EL-BL-EI-PPS-1280-94

LT-EL-BL-EI DRAWING DIRECTORY	LT-EL-BL-EI-PPS-1280-94 DRAWING NUMBER	C REV
COMPUTER REPRODUCIBLE	SCALE: N/A	SHEET 21 OF 26

REV	DESCRIPTION	BY	DATE	CHK	APP
	SEE SHEET 1				

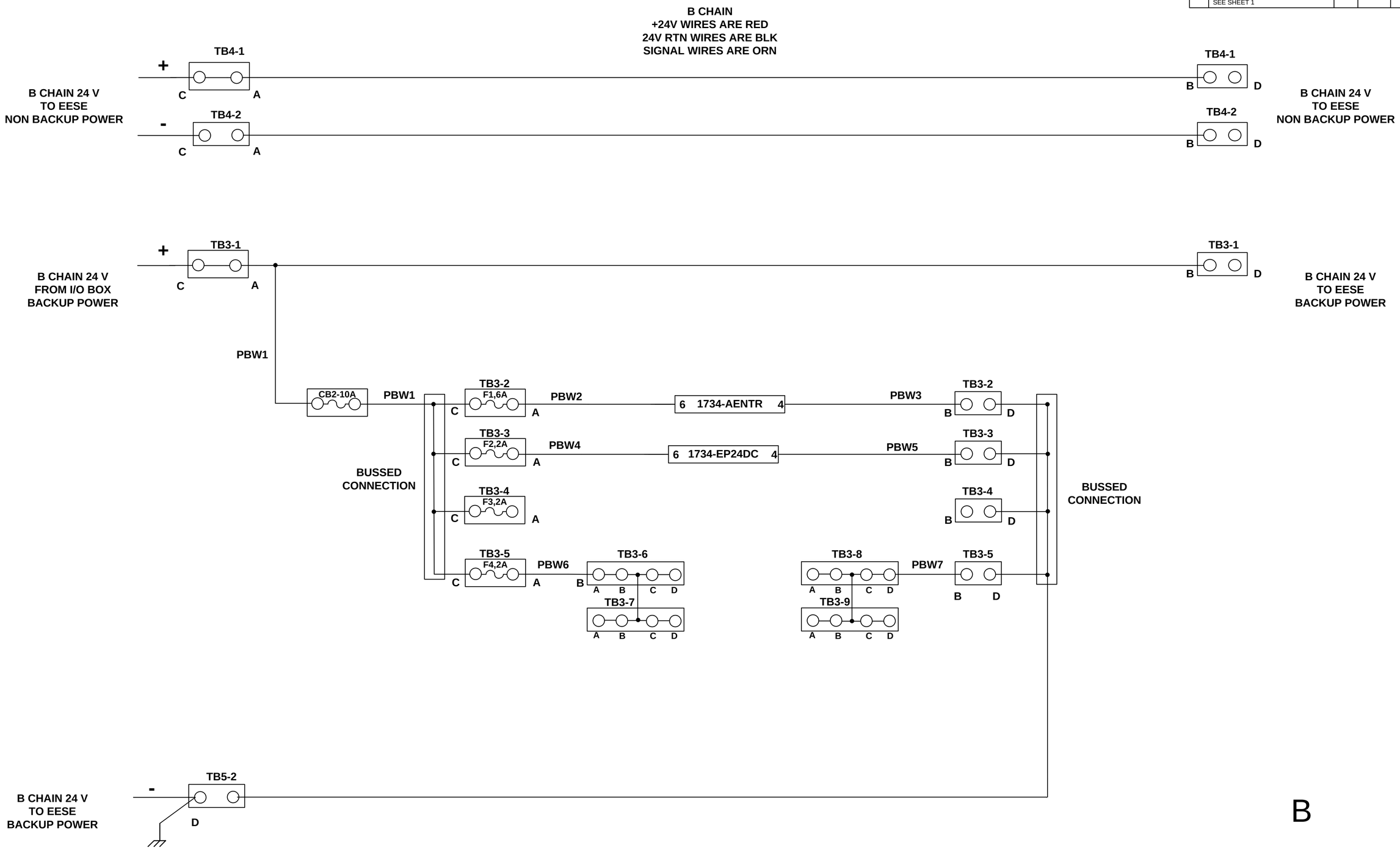

B

LT-EL-BL-EI	LT-EL-BL-EI-PPS-1280-94	C
DRAWING DIRECTORY	DRAWING NUMBER	REV
COMPUTER REPRODUCIBLE	SCALE: N/A	SHEET 22 OF 26

LT-EL-BL-EI-PPS-1280-94

REV	DESCRIPTION	BY	DATE	CHK	APP
	SEE SHEET 1				

28ID D Cable list

CABLE Num.	CHAIN	From	To LOCATION	CONDUCTORS Needed
ID28D-1-A	A	D	CS1&Emergency stop	8
ID28D-1-B	B	D	CS1&Emergency stop	8
ID28D-2-A	A	D	CS2&Emergency stop	8
ID28D-2-B	B	D	CS2&Emergency stop	8
ID28D-3-A	A	D	Emergency Entrance E-Stop	4
ID28D-3-B	B	D	Emergency Entrance E-Stop	6
ID28D-4-A	A	D	Front Left&Right Door Switches	8
ID28D-4-B	B	D	Front Left&Right Door Switches	8
ID28D-5-A	A	D	Rear LEFT&Right Door Switch	8
ID28D-5-B	B	D	Rear LEFT&Right Door Switch	8
ID28D-6-A	A	D	Front Left&Right Mag Lock Switch	4
ID28D-6-B	B	D	Front Left&Right REED Switch	4
ID28D-7-A	A	D	Front Interlock, entry permit, Beam On Lights	6
ID28D-7-B	B	D	Front Interlock, entry Permit, Beam on lights	6
ID28D-8-A	A	D	Cable Labyrinth1 Door Latch A Chain (6 Conductors)	2
ID28D-8-B	B	D	Cable Labyrinth1 Door Latch B Chain (6 Conductors)	2
ID28D-8-A	A	D	Cable Labyrinth1 Door Switch A Chain	4
ID28D-8-B	B	D	Cable Labyrinth1 Door Switch B Chain	4
ID28D-9-A	A	D	Cable Labyrinth2 Door Latch A Chain (6 Conductors)	2
ID28D-9-B	B	D	Cable Labyrinth2 Door Latch B Chain (6 Conductors)	2
ID28D-9-A	A	D	Cable Labyrinth2 Door Switch A Chain	4
ID28D-9-B	B	D	Cable Labyrinth2 Door Switch B Chain	4
ID28D-10-A	A	D	External Check Station	4
ID28D-10-B	B	D	External Check Station	2
ID28D-11-A	A	D	REAR Left&Right Reed Switch	4
ID28D-11-B	B	D	REAR left&Right Reed Switch	4
ID28D-12-A	A	D	REAR Interlock, entry permit, Beam On Lights	6
ID28D-12-B	B	D	REAR Interlock, entry Permit, Beam on lights	6
ID28D-13-A	A	D	Search Sounder	2
ID28D-13-B		D	SPARE	
ID28D-14-A	A	D	OverHead Lights	2
ID28D-14-B	B	D	SPARE	
ID28D-15-A	A	D	Front A Chain Interlock, Entry Permit, Beam lights	6
ID28D-15-B	B	D	Front B Chain Interlock, Entry Permit, Beam lights	6
ID28D-16-A	A	D	Front LEFT&Right Door MagLOCK Coil	4
ID28D-16-B	B	D	SPARE	
ID28D-17-A	A	D	REAR Left Door Maglock Coil	4
ID28D-17-B	B	D	SPARE	
ID28D-18-A	A	D	Door inhibit relay	2
ID28D-18-B	A	D	SPARE	
ID28D-19-A	A	D	Search Beacon	2
ID28D-19-B	B	D	SPARE	
ID28D-20-A	A	D	Beam Imminent Beacon	2
ID28D-20-B	B	D	SPARE	
ID28D-21-A	A	D	Beam Imminent Sounder	2
ID28D-21-B	B	D	SPARE	
ID28D-22-A	A	D	Emergency Egress	4
ID28D-22-B	B	D	Emergency Egress	6
SPARE				
ID28D-21-EPS		D	Gillotine shutter A2 Closed Switch	
SPARE				

LT-EL-BL-EI-PPS-1280-94

LT-EL-BL-EI	LT-EL-BL-EI-PPS-1280-94	C
DRAWING DIRECTORY	DRAWING NUMBER	REV
COMPUTER REPRODUCIBLE	SCALE: N/A	SHEET 23 OF 26

REV	DESCRIPTION	BY	DATE	CHK	APP
	SEE SHEET 1				

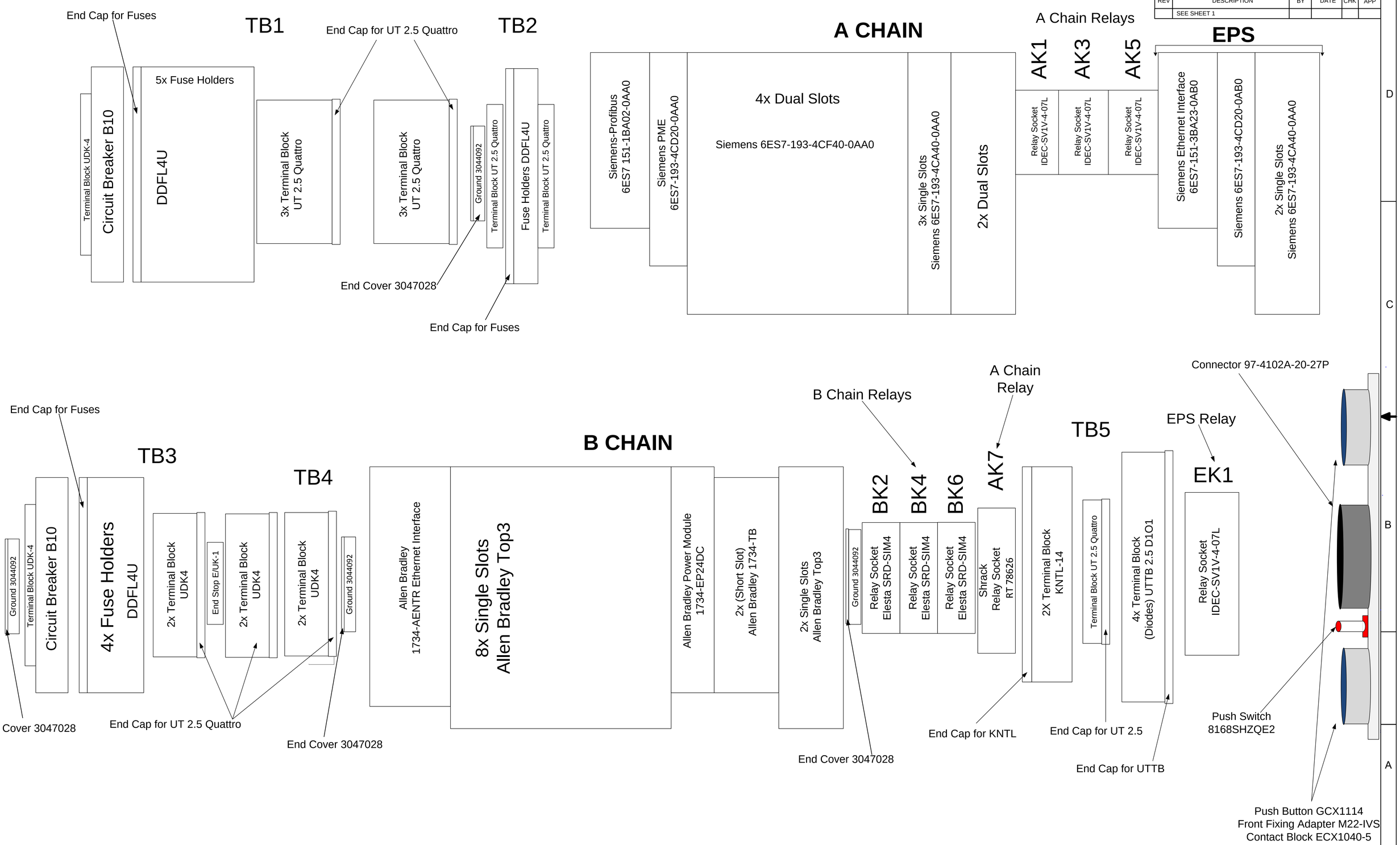

ID28D

LT-EL-BL-EI	LT-EL-BL-EI-PPS-1280-94	C
DRAWING DIRECTORY	DRAWING NUMBER	REV
COMPUTER REPRODUCIBLE	SCALE: N/A	SHEET 24 OF 26

REV	DESCRIPTION	BY	DATE	CHK	APP
	SEE SHEET 1				

ROW 1:							
A CHAIN							
SLOT	MODULE	SOCKET	DESCRIPTION	VENDOR			
	[13]						
	WMZS1B10	N/A	Circuit Breaker B10	Eaton			
TB1	[6]	1>5 [8]	6>8 [7]	[11]	9>11 [7]	[11]	
TB2	[10]	[2]	1 [7]	[6]	2 [8]	3 [7]	
	6ES7-151-1BA02-0AA0	N/A	PROFI-BUS	SIEMENS			
1	6ES7-4CA50-0AB0	6ES7-193-4CD20-0AA0	POWER MODULE-PME	SIEMENS			
2	6ES7-138-4FA04-0AB0	6ES7-193-4CF40-0AA0	4/8 FDI 8 SAFE IN	SIEMENS			
3	6ES7-138-4FA04-0AB0	6ES7-193-4CF40-0AA0	4/8 FDI 8 SAFE IN	SIEMENS			
4	6ES7-138-4FA04-0AB0	6ES7-193-4CF40-0AA0	4/8 FDI 8 SAFE IN	SIEMENS			
5	6ES7-138-4FA04-0AB0	6ES7-193-4CF40-0AA0	4/8 FDI 8 SAFE IN	SIEMENS			
6	6ES7-131-4BF00-0AB0	6ES7-193-4CA40-0AA0	8DI STANDARD IN	SIEMENS			
7	6ES7-131-4BF00-0AB0	6ES7-193-4CA40-0AA0	8DI STANDARD IN	SIEMENS			
8	6ES7-132-4BF00-0AA0	6ES7-193-4CA40-0AA0	8DO	SIEMENS			
9	6ES7-138-4FB03-0AB0	6ES7-193-4CF40-0AA0	4FD0 SAFE OUT	SIEMENS			
AK1	RF1V-3A1BL-D24	SF1V-4-07L	RELAY SOCKET	IDEC			
AK3	RF1V-3A1BL-D24	SF1V-4-07L	RELAY SOCKET	IDEC			
AK5	RF1V-3A1BL-D24	SF1V-4-07L	RELAY SOCKET	IDEC			
EPS							
	6ES7-151-3BA23-0AB0	N/A	EHTERNET INTERFACE	SIEMENS			
1	6ES7-4CA50-0AB0	6ES7-193-4CD20-0AB0	POWER MODULE-PME	SIEMENS			
2	6ES7-131-4BF00-0AB0	6ES7-193-4CA40-0AA0	8DI STANDARD IN	SIEMENS			
2	6ES7-132-4BF00-0AA0	6ES7-193-4CA40-0AA0	8DO	SIEMENS			
ROW 2:							
B CHAIN							
SLOT	MODULE	SOCKET (QTY)	DESCRIPTION	VENDOR			
	[10]	[2]					
	[13]						
	WMZS1B10	N/A	Circuit Breaker B10	Eaton			
TB3	[6]	1>4 [8]	5>6 [7]	[11]	[5]	7>9 [7]	[11]
TB4	1>2 [7]	[11]	[10]	[2]			
	1734 AENTR	N/A	EHTERNET INTERFACE	AB			
1	1734 IB8S	1734 TOP3 (2)	AB INPUT SAFETY IN	AB			
2	1734 IB8S	1734 TOP3 (2)	AB INPUT SAFETY IN	AB			
3	1734 IB8S	1734 TOP3 (2)	AB INPUT SAFETY IN	AB			
4	1734 IB8S	1734 TOP3 (2)	AB INPUT SAFETY IN	AB			
	1734 EP24DC	N/A	POWER MODULE	AB			
5	1734-IB8	1734 TB	AB INPUT STANDARD IN	AB			
6	1734-OW4	1734 TB	RELAY MODULE 4 OUTPUT	AB			
7	1734-OB8S	1734 TOP3 (2)	AB INPUT SAFETY IN	AB			
	[10]	[2]					
BK2	SIM 312	SRD-SIM4	RELAY SOCKET	ELESTA			
BK4	SIM 312	SRD-SIM4	RELAY SOCKET	ELESTA			
BK6	SIM 312	SRD-SIM4	RELAY SOCKET	ELESTA			
AK7	OW5669.12/983/61	RT 78626	RELAY	SHRACK			
TB3	[15]	1>2 [14]	3 [7]	[11]	4>7 [16]	[17]	
EK1	RF1V-3A1BL-D24	SF1V-4-07L	RELAY SOCKET	IDEC			

LT-EL-BL-EI-PPS-1280-94

LT-EL-BL-EI DRAWING DIRECTORY	LT-EL-BL-EI-PPS-1280-94 DRAWING NUMBER	C REV
COMPUTER REPRODUCIBLE	SCALE: N/A	SHEET 25 OF 26

REV	DESCRIPTION	BY	DATE	CHK	APP
	SEE SHEET 1				

Paired part numbers are color coordinated.

COLOR	PROD #	TYPE
[1]	3044636	Double-level terminal block - UTTB 2,5
[2]	3044092	GROUND
[3]	3047293	End cover - D-UTTB 2,5/4
[4]	3047303	Spacer plate - DP-UTTB 2,5/4
[5]	1201413	End clamp - E/UK 1
[6]	EPDDFL4U	End Plate; Term Blk; DIN Rail; Gray;
[7]	3044542	DIN Rail Terminal Blocks UT 2 5/4-QUATTRO
[8]	DDFL-4U	24V FUSES
[9]	3044076	Feed-through terminal block - UT 2,5
[10]	3047028	End cover - D-UT 2,5/10
[11]	3047170	End cover - D-UT 2,5/4-QUATTRO
[12]	3044102	Feed-through terminal block - UT 4
[13]	2775016	Feed-through terminal block - UDK 4
[14]	KN-TL-14	KONNECT IT 3 CIRCUIT TERMINAL BLOCK
[15]	KN-EC-TL	3 CIRCUIT TERMINAL BLOCK COVER
[16]	CDL4U(E)DD2	99321 ALTECH DIODE TERMINAL BLOCK
[17]	EPCDL4U	ALTECH DIODE TB END COVER

[1]
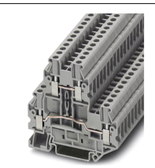
[7]

[13]
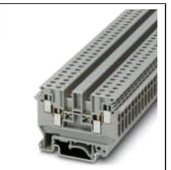

[2]
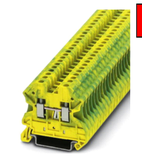
[8]

[14]

[3]

[9]

[15]

[4]

[10]

[16]
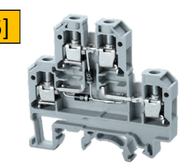

[5]

[11]

[17]
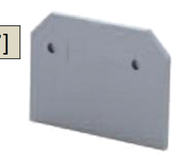

[6]

[12]

LT-EL-BL-EI-PPS-1280-94

LT-EL-BL-EI (DRAWING DIRECTORY)	LT-EL-BL-EI-PPS-1280-94 (DRAWING NUMBER)	C (REV)
COMPUTER REPRODUCIBLE	SCALE: N/A	SHEET 26 OF 26

REV	DESCRIPTION	DATE	BY	CHECKED	APP
A	INITIAL RELEASE	8/19/2014	CG	JM	SB
B	REVISED PER ECN 015-1274	8-24-15	CG	JM	SB
C	REVISED PER ECN 015-1562	7/29/2016	SEJ	JM	SB

WATER FLOW INTERLOCK CHANNEL 1 A CHAIN

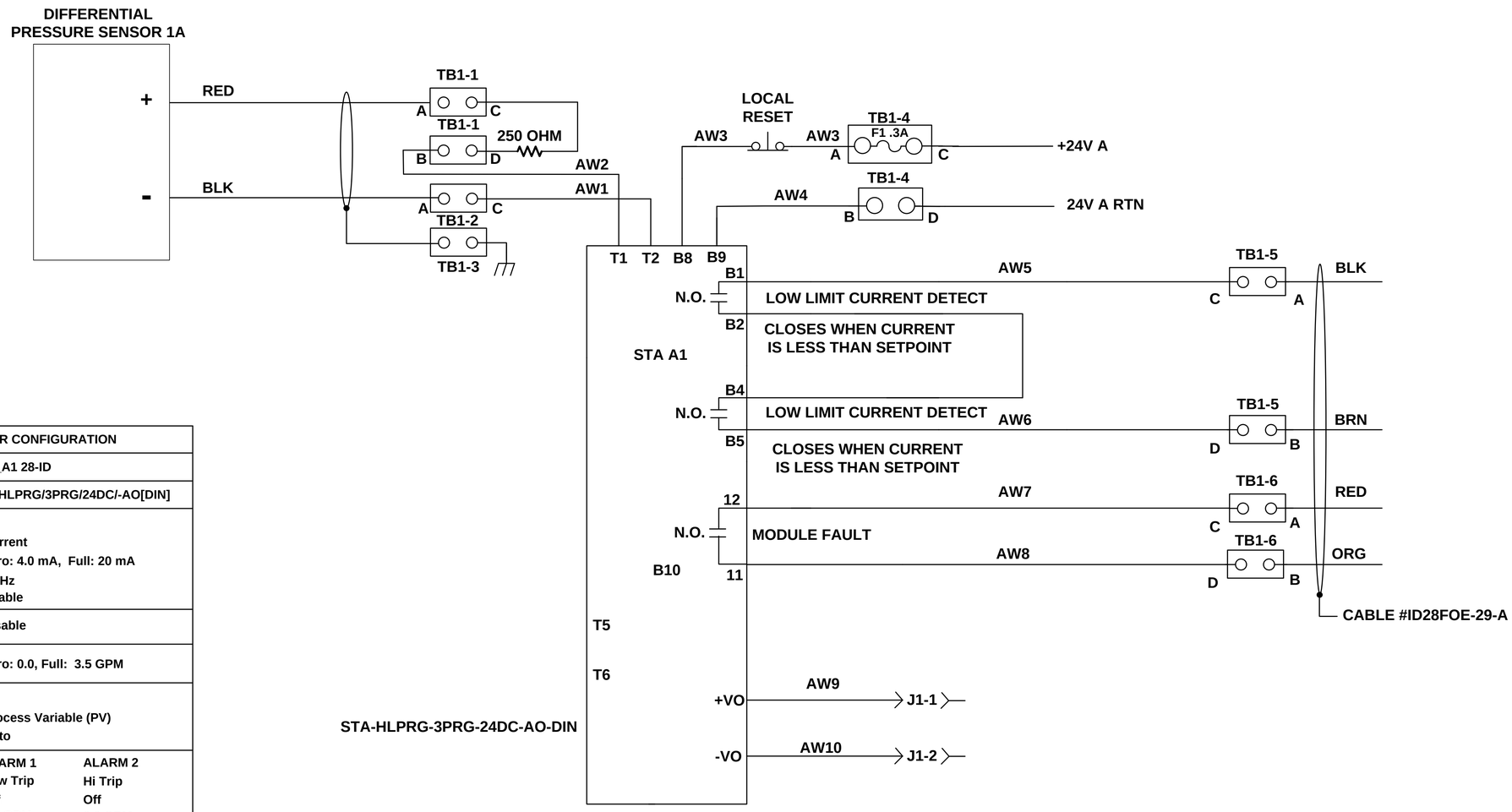

STA DEVICE PARAMETER CONFIGURATION		
DEVICE NAME / LOCATION:	STA_A1 28-ID	
MODEL :	STA/HLPRG/3PRG/24DC/-AO[DIN]	
INPUT		
Measurement Type:	Current	
Input Range:	Zero: 4.0 mA, Full: 20 mA	
Filter Settings:	60 Hz	
Broken wire:	Enable	
TRIMMING	Disable	
SCALING	Zero: 0.0, Full: 3.5 GPM	
DISPLAY		
Display Source:	Process Variable (PV)	
Precision:	Auto	
ALARMS	ALARM 1	ALARM 2
Mode:	Low Trip	Hi Trip
Latching:	Off	Off
Trip point:	2.1 GPM	0.0 GPM
Dead Band:	0.0 GPM	0.0 GPM
Delay:	0 s	0 s
ANALOG OUTPUT		
Mode:	Current	
Fail mode:	Fail Low	
AO Range:	Zero: 4.0, Full: 20.0 mA	
Damping:	Disable (0.0 s)	

A

LT-EL-BL-EI-PPS-1280-92

BROOKHAVEN NATIONAL LABORATORY

BROOKHAVEN NATIONAL LABORATORY
BROOKHAVEN SCIENCE ASSOCIATES
UPTON, NEW YORK 11973
Exploring Life's Mysteries, Protecting its Future

NSLSII NATIONAL SYNCHROTRON LIGHT SOURCE II

UNLESS OTHERWISE SPECIFIED INTEGER TOLERANCES ± .06
DECIMAL TOLERANCES .X ± .030 .XX ± .015 .XXX ± .010
ANGULAR TOLERANCE ± 0.5°
UNSPECIFIED RADII .02 MAX
125 BREAK SHARP CORNERS AND EDGES
FINISH MAX .03 MIN .005

UNLESS OTHERWISE SPECIFIED DIMENSIONS ARE IN INCHES DIMENSIONS IN [**] ARE MILLIMETERS EQUIV. FOR REF. ONLY
ESH&Q RISK LEVEL A-1
INTERPRET DRAWING AS PER ANSI Y14.5 OR Y32.2

		DATE	OUTSTANDING ECN'S
DRWN BY	C.GUARINO	9-5-14	
CHK BY	J. MALLEY	9-5-14	
ENG APP	S.BUDA	9-5-14	
SUPV APP	G. GANETIS	9-6-14	
QA APP	E. CHESWICK	9-5-14	
ESH APP	R. LEE	9-5-14	

JOB NUMBER | USED ON DWG. NO.

WIRING DIAGRAM
ID28-H2O (XPD-H2O)
A CHAIN AND B CHAIN

LT-EL-BL-EI — DRAWING DIRECTORY
LT-EL-BL-EI-PPS-1280-92 — DRAWING NUMBER
C — REV

COMPUTER REPRODUCIBLE | SCALE: N/A | SHEET 1 OF 5

REV	DESCRIPTION	DATE	BY	CHECKED	APP
	SEE SHEET 1				

WATER FLOW INTERLOCK CHANNEL 13A CHAIN

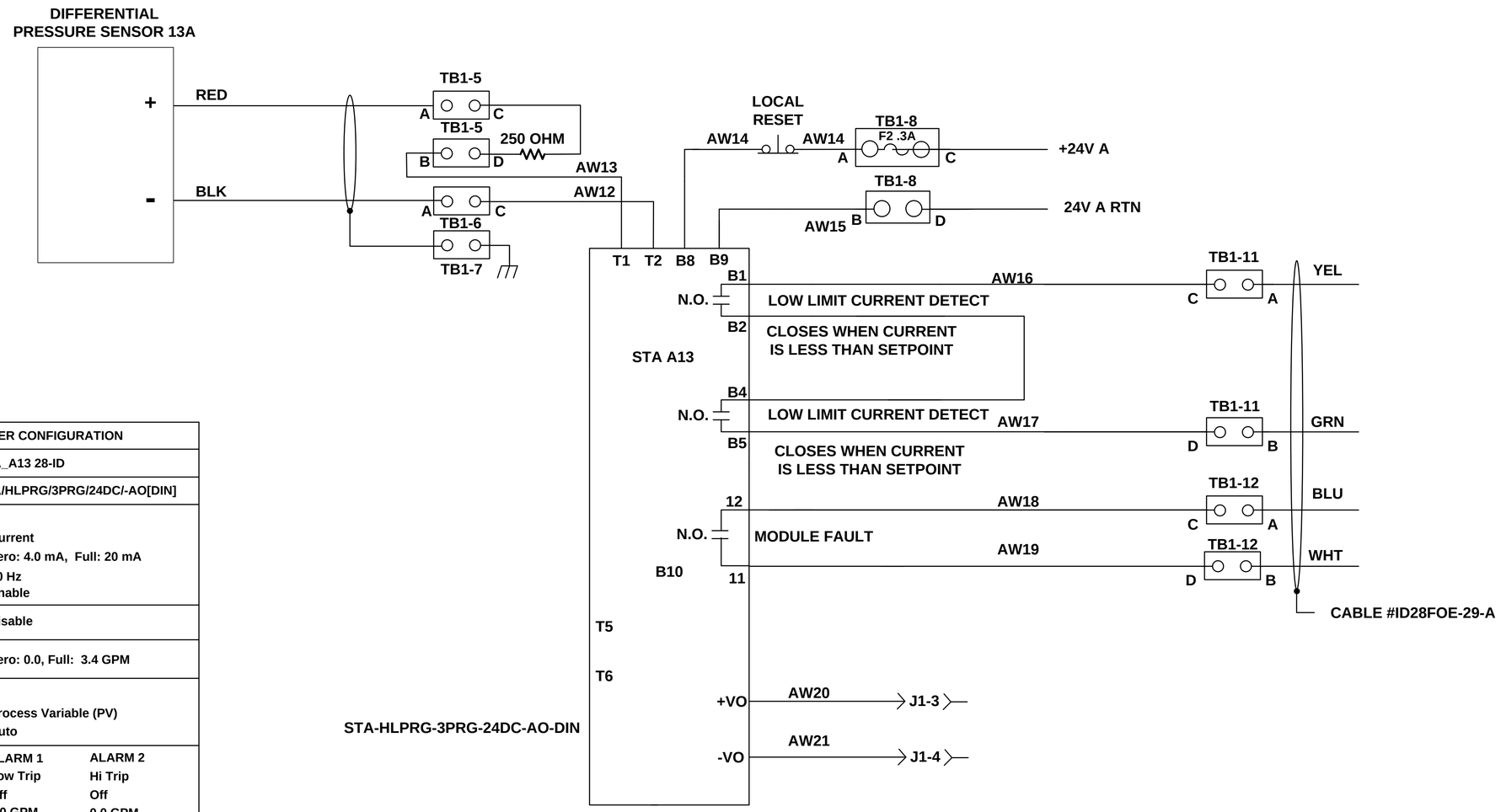

STA DEVICE PARAMETER CONFIGURATION		
DEVICE NAME / LOCATION:	STA_A13 28-ID	
MODEL :	STA/HLPRG/3PRG/24DC/-AO[DIN]	
INPUT		
Measurement Type:	Current	
Input Range:	Zero: 4.0 mA, Full: 20 mA	
Filter Settings:	60 Hz	
Broken wire:	Enable	
TRIMMING	Disable	
SCALING	Zero: 0.0, Full: 3.4 GPM	
DISPLAY		
Display Source:	Process Variable (PV)	
Precision:	Auto	
ALARMS	ALARM 1	ALARM 2
Mode:	Low Trip	Hi Trip
Latching:	Off	Off
Trip point:	2.0 GPM	0.0 GPM
Dead Band:	0.0 GPM	0.0 GPM
Delay:	0 s	0 s
ANALOG OUTPUT		
Mode:	Current	
Fail mode:	Fail Low	
AO Range:	Zero: 4.0, Full: 20.0 mA	
Damping:	Disable (0.0 s)	

A

LT-EL-BL-EI-PPS-1280-92

LT-EL-BL-EI (DRAWING DIRECTORY)	LT-EL-BL-EI-PPS-1280-92 (DRAWING NUMBER)	C (REV)
COMPUTER REPRODUCIBLE	SCALE: N/A	SHEET 2 OF 5

REV	DESCRIPTION	DATE	BY	CHECKED	APP
	SEE SHEET 1				

WATER FLOW INTERLOCK CHANNEL 1 B CHAIN

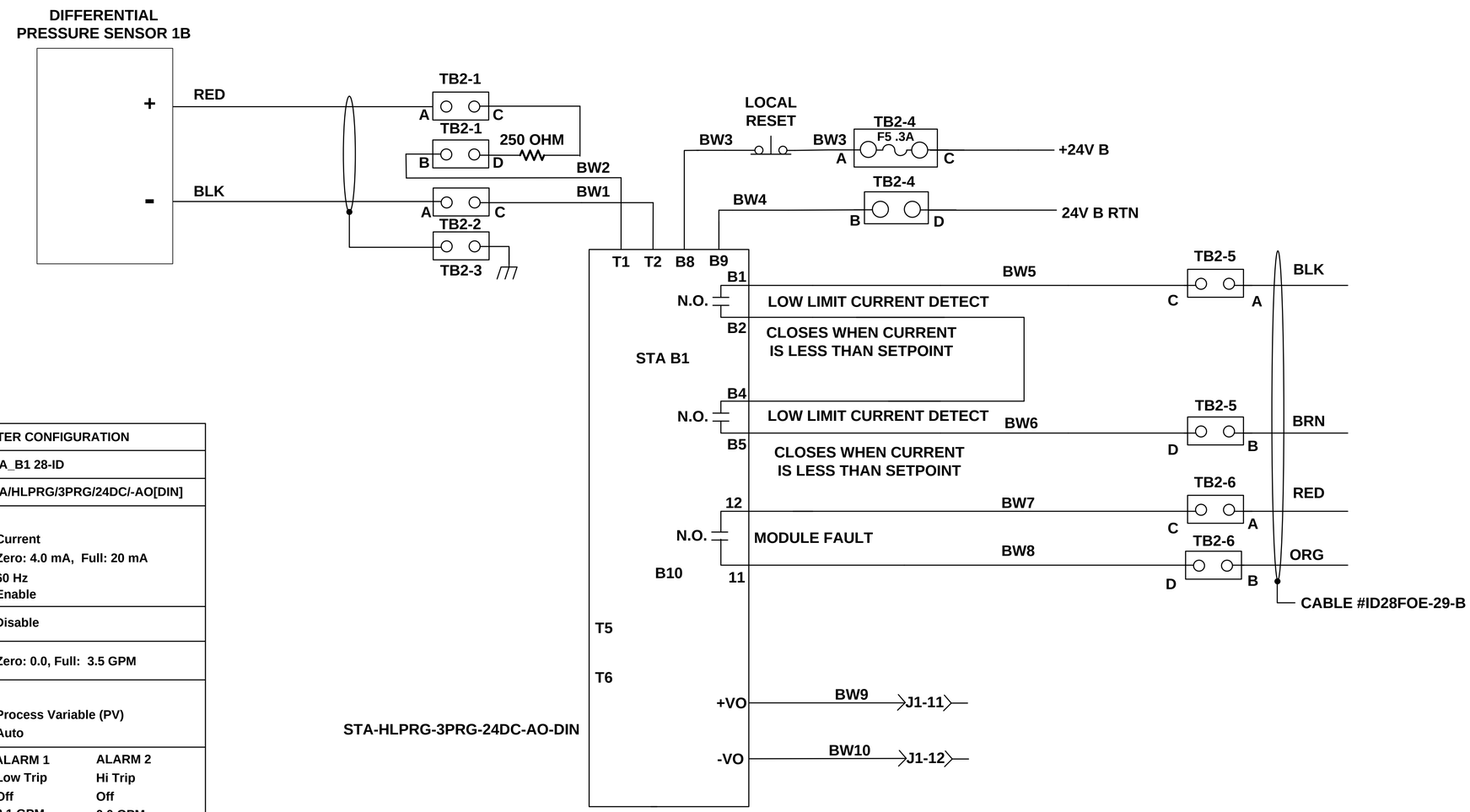

STA DEVICE PARAMETER CONFIGURATION		
DEVICE NAME / LOCATION:	STA_B1 28-ID	
MODEL :	STA/HLPRG/3PRG/24DC/-AO[DIN]	
INPUT		
Measurement Type:	Current	
Input Range:	Zero: 4.0 mA, Full: 20 mA	
Filter Settings:	60 Hz	
Broken wire:	Enable	
TRIMMING	Disable	
SCALING	Zero: 0.0, Full: 3.5 GPM	
DISPLAY		
Display Source:	Process Variable (PV)	
Precision:	Auto	
ALARMS	ALARM 1	ALARM 2
Mode:	Low Trip	Hi Trip
Latching:	Off	Off
Trip point:	2.1 GPM	0.0 GPM
Dead Band:	0.0 GPM	0.0 GPM
Delay:	0 s	0 s
ANALOG OUTPUT		
Mode:	Current	
Fail mode:	Fail Low	
AO Range:	Zero: 4.0, Full: 20.0 mA	
Damping:	Disable (0.0 s)	

B

LT-EL-BL-EI-PPS-1280-92

LT-EL-BL-EI (DRAWING DIRECTORY)	LT-EL-BL-EI-PPS-1280-92 (DRAWING NUMBER)	C (REV)
COMPUTER REPRODUCIBLE	SCALE: N/A	SHEET 3 OF 5

REV	DESCRIPTION	DATE	BY	CHECKED	APP
	SEE SHEET 1				

WATER FLOW INTERLOCK CHANNEL 13B CHAIN

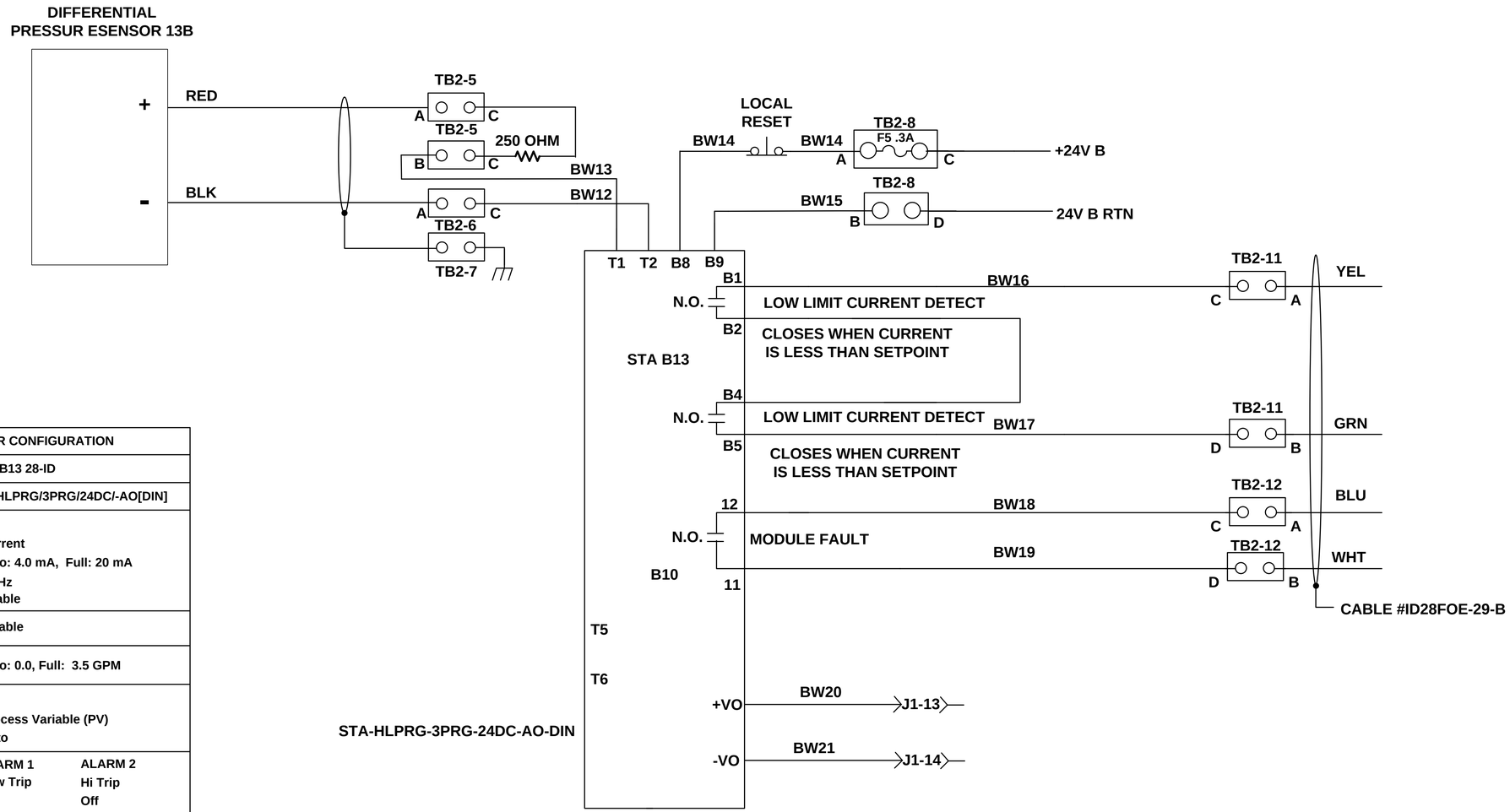

STA DEVICE PARAMETER CONFIGURATION		
DEVICE NAME / LOCATION:	STA_B13 28-ID	
MODEL :	STA/HLPRG/3PRG/24DC/-AO[DIN]	
INPUT		
Measurement Type:	Current	
Input Range:	Zero: 4.0 mA, Full: 20 mA	
Filter Settings:	60 Hz	
Broken wire:	Enable	
TRIMMING	Disable	
SCALING	Zero: 0.0, Full: 3.5 GPM	
DISPLAY		
Display Source:	Process Variable (PV)	
Precision:	Auto	
ALARMS	ALARM 1	ALARM 2
Mode:	Low Trip	Hi Trip
Latching:	Off	Off
Trip point:	2.0 GPM	0.0 GPM
Dead Band:	0.0 GPM	0.0 GPM
Delay:	0 s	0 s
ANALOG OUTPUT		
Mode:	Current	
Fail mode:	Fail Low	
AO Range:	Zero: 4.0, Full: 20.0 mA	
Damping:	Disable (0.0 s)	

B

LT-EL-BL-EI-PPS-1280-92

LT-EL-BL-EI	LT-EL-BL-EI-PPS-1280-92	C
DRAWING DIRECTORY	DRAWING NUMBER	REV
COMPUTER REPRODUCIBLE	SCALE: N/A	SHEET 4 OF 5

REV	DESCRIPTION	DATE	BY	CHECKED	APP
	SEE SHEET 1				

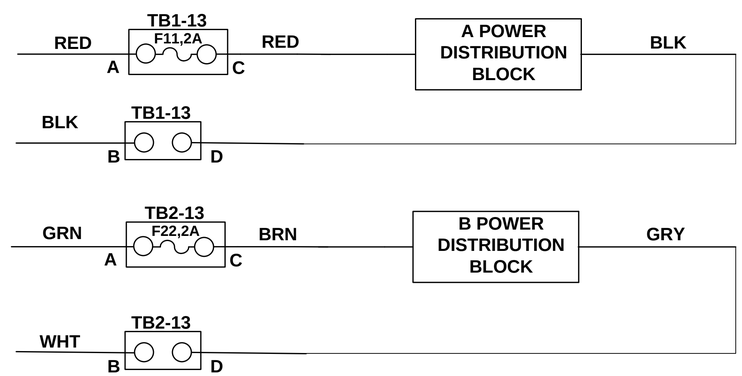

LT-EL-BL-EI-PPS-1280-92

LT-EL-BL-EI	LT-EL-BL-EI-PPS-1280-92	C
DRAWING DIRECTORY	DRAWING NUMBER	REV

COMPUTER REPRODUCIBLE | SCALE: N/A | SHEET 5 OF 5

REV	DESCRIPTION	DATE	BY	CHECKED	APP
A	INITIAL RELEASE	9/08/2014	SEJ	JM	SB
B	REVISED PER ECN LT-ECN-016-1604	9/08/2016	SEJ	JM	SB

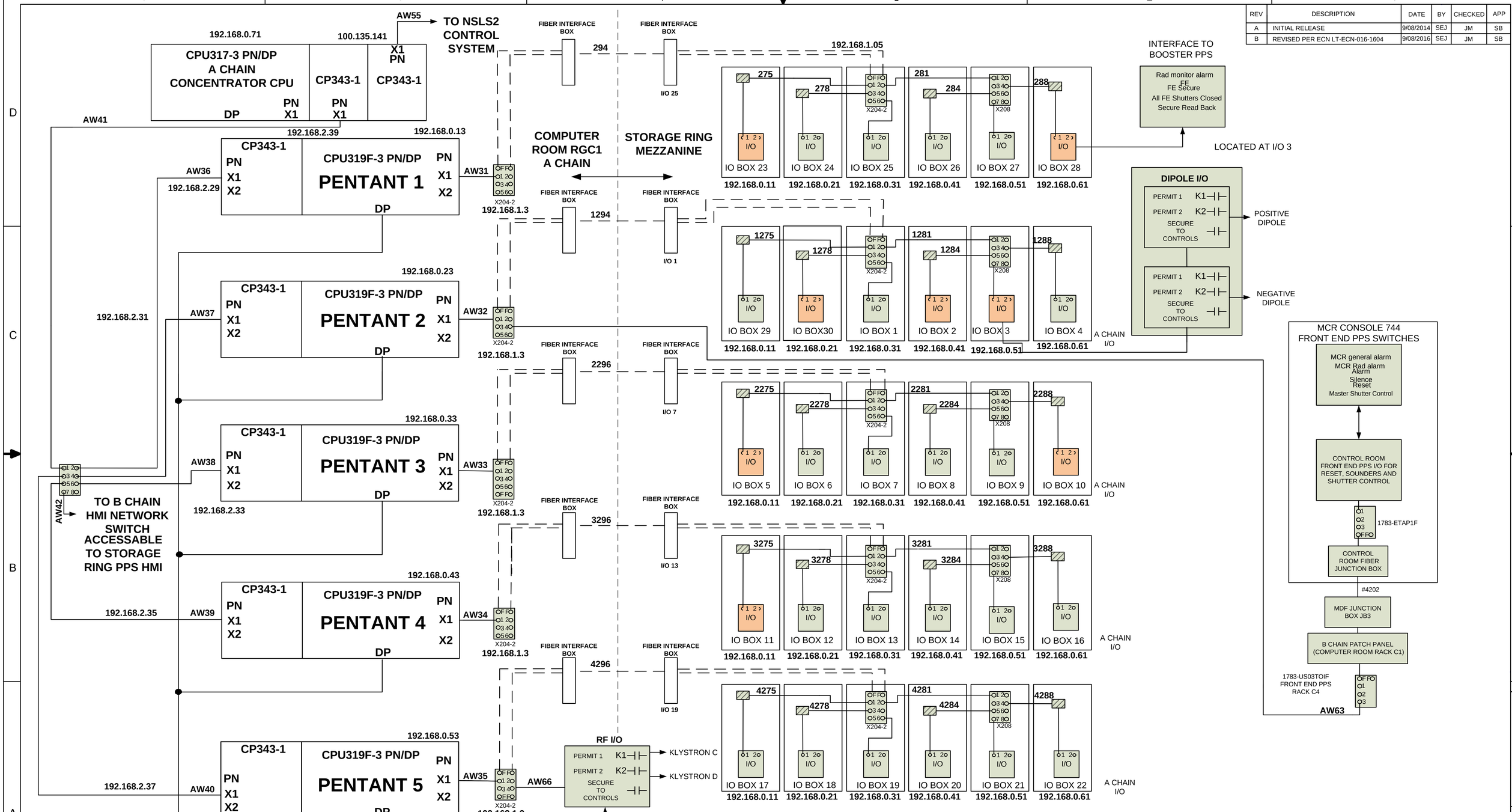

LT-EL-BL-EI-PPS-0101-90

BROOKHAVEN NATIONAL LABORATORY

BROOKHAVEN NATIONAL LABORATORY
BROOKHAVEN SCIENCE ASSOCIATES
UPTON, NEW YORK 11973
Exploring Life's Mysteries, Protecting Its Future

NSLSII NATIONAL SYNCHROTRON LIGHT SOURCE II

UNLESS OTHERWISE SPECIFIED INTEGER TOLERANCES ± .06
DECIMAL TOLERANCES .X ± .030 .XX ± .015 .XXX ± .010
ANGULAR TOLERANCE ± 0.5°
UNSPECIFIED RADII .02 MAX
125 BREAK SHARP CORNERS AND EDGES
FINISH MAX .03 MIN .005

UNLESS OTHERWISE SPECIFIED DIMENSIONS ARE IN INCHES DIMENSIONS IN [ ] ARE MILLIMETERS EQUIV. FOR REF. ONLY
INTERPRET DRAWING AS PER ANSI Y14.5 OR Y32.2
ESH&Q RISK LEVEL A-1
OUTSTANDING ECN'S

		DATE
DRWN BY	S. Jarzabkowski	9/08/2014
CHK BY	J. Malley	9/08/2014
ENG APP	S. Buda	9/08/2014
SUPV APP	G. Ganetis	9/10/2014
QA APP	E. Cheswick	9/08/2014
ESH APP	R. Lee	9/10/2014

WIRING DIAGRAM, FRONT END PPS CPU RACK A CHAIN

LT-EL-BL-EI (DRAWING DIRECTORY) | LT-EL-BL-EI-PPS-0101-90 (DRAWING NUMBER) | B (REV.)

COMPUTER REPRODUCIBLE | SCALE: N/A | SHEET 1 OF 5

JOB NUMBER | USED ON DWG. NO.

REV	DESCRIPTION	DATE	BY	CHECKED	APP
	SEE SHEET 1				

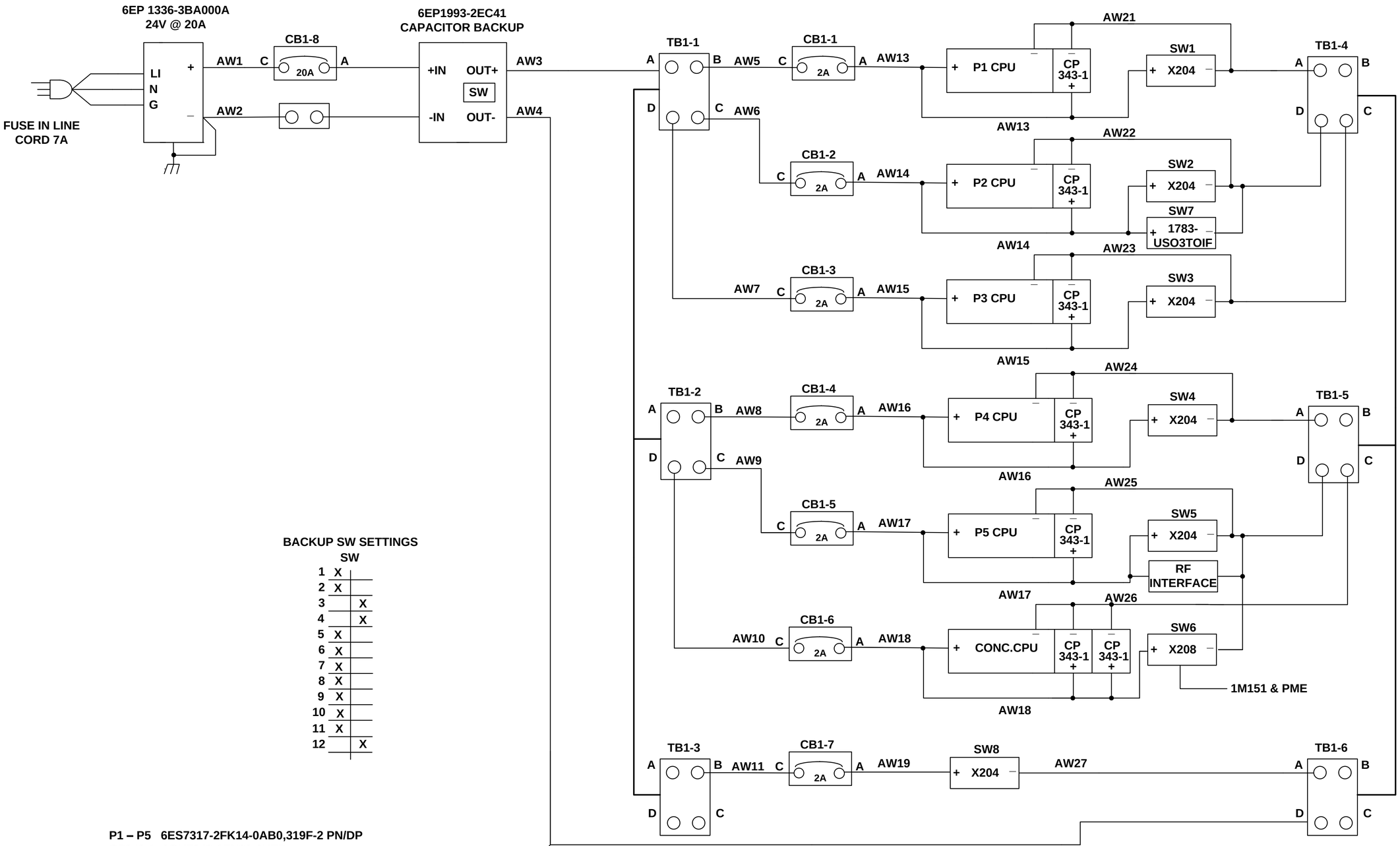

BACKUP SW SETTINGS

	SW	
1	X	
2	X	
3		X
4		X
5	X	
6	X	
7	X	
8	X	
9	X	
10	X	
11	X	
12		X

P1 – P5 6ES7317-2FK14-0AB0,319F-2 PN/DP
CP343-1 6GK7343-1EX30-0XED
SW2 6GK52061-1BB10-2AA3,X206-1
SW1,5 & 8 6GK55204-2BB10-2AA3,X204-2
SW6 6GK5208-OBA10-2AA3,X208
SW7 1783-USO3TOIF

LT-EL-BL-EI-PPS-0101-90

LT-EL-BL-EI (DRAWING DIRECTORY)	LT-EL-BL-EI-PPS-0101-90 (DRAWING NUMBER)	B (REV)
COMPUTER REPRODUCIBLE	SCALE: N/A	SHEET 2 OF 5

REV	DESCRIPTION	BY	DATE	CHK	APP
	SEE SHEET 1				

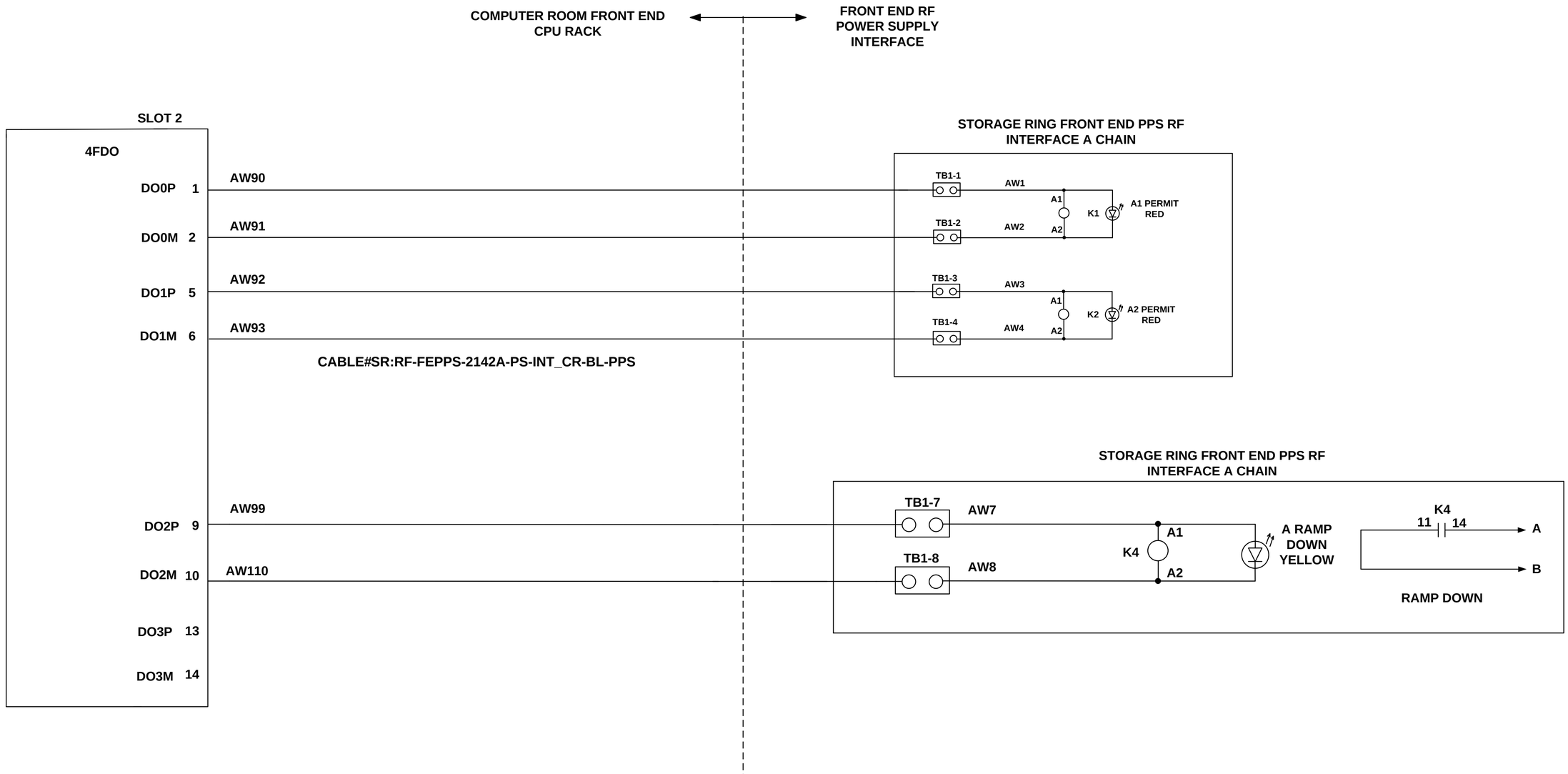

A

LT-EL-BL-EI	LT-EL-BL-EI-PPS-0101-90	B
DRAWING DIRECTORY	DRAWING NUMBER	REV

COMPUTER REPRODUCIBLE | SCALE: N/A | SHEET 3 OF 5

LT-EL-BL-EI-PPS-0101-90

REV	DESCRIPTION	BY	DATE	CHK	APP
	SEE SHEET 1				

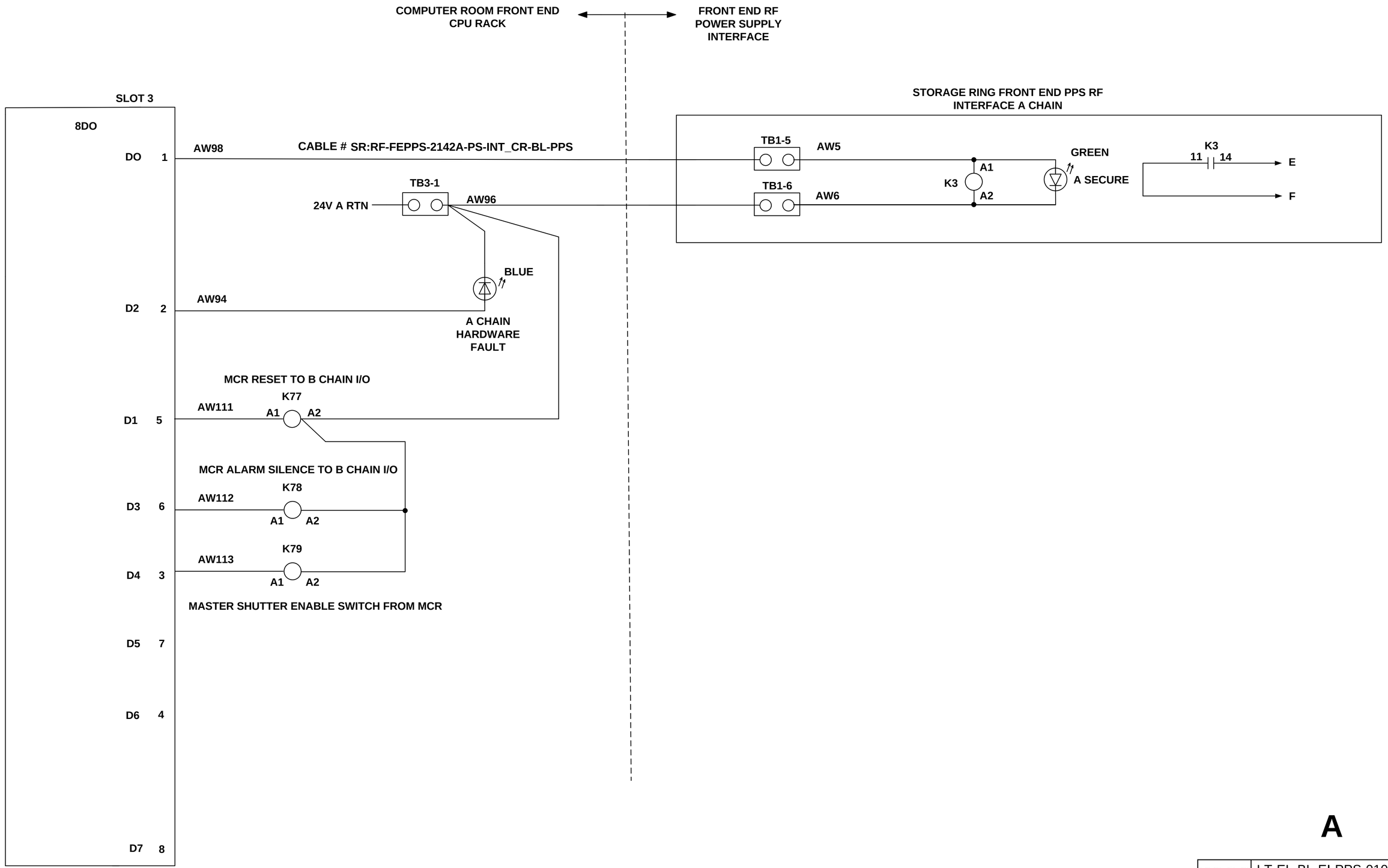

A

LT-EL-BL-EI	LT-EL-BL-EI-PPS-0101-90	B
DRAWING DIRECTORY	DRAWING NUMBER	REV

COMPUTER REPRODUCIBLE | SCALE: N/A | SHEET 4 OF 5

LT-EL-BL-EI-PPS-0101-90

REV	DESCRIPTION	BY	DATE	CHK	APP
	SEE SHEET 1				

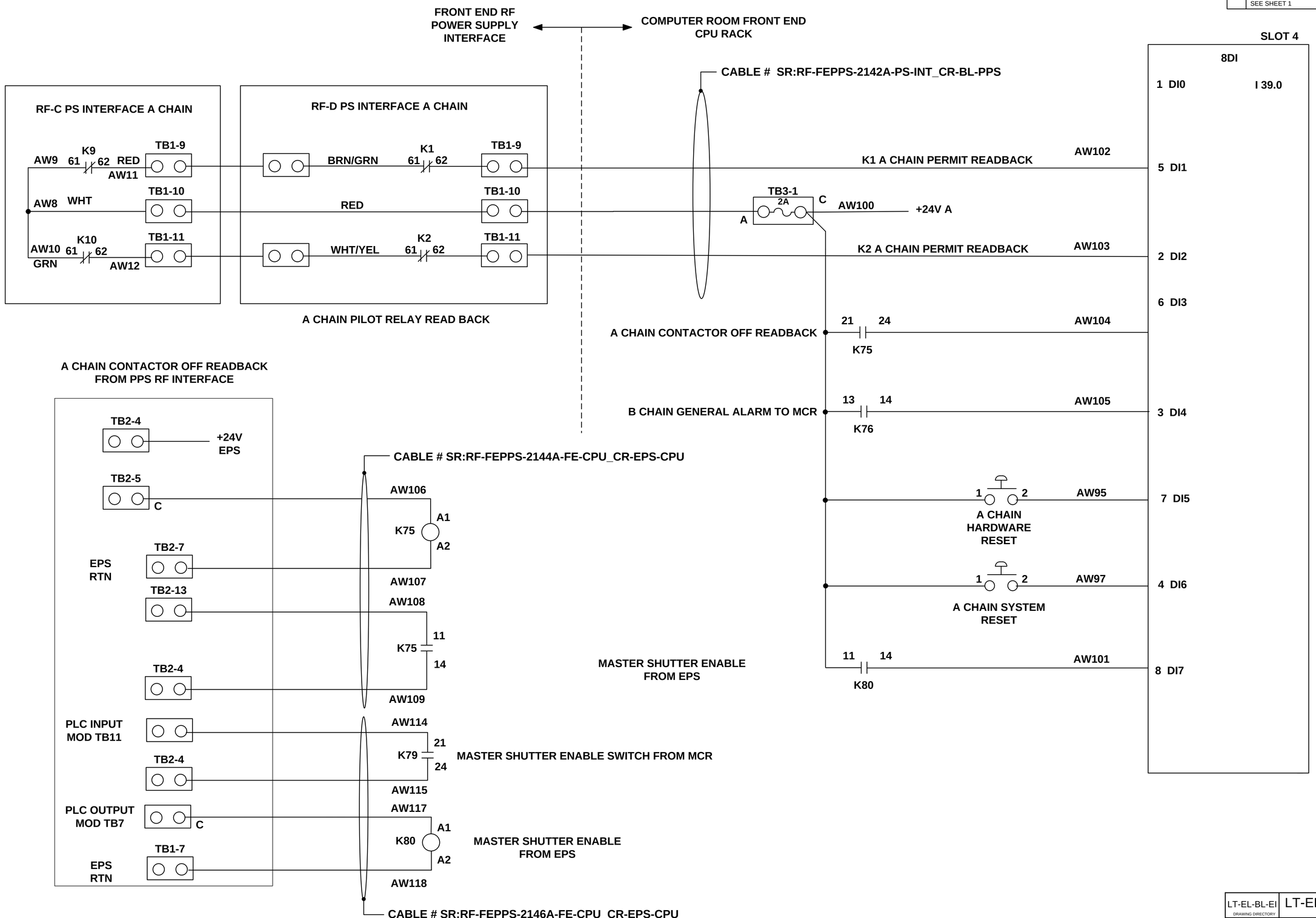

A

LT-EL-BL-EI	LT-EL-BL-EI-PPS-0101-90	B
DRAWING DIRECTORY	DRAWING NUMBER	REV

COMPUTER REPRODUCIBLE | SCALE: N/A | SHEET 5 OF 5

LT-EL-BL-EI-PPS-0101-90

REV	DESCRIPTION	DATE	BY	CHECKED	APP
A	INITIAL RELEASE	9/08/2014	SEJ	JM	SB
B	REVISED PER ECN LT-ECN-016-1605	9/08/2016	SEJ	JM	SB

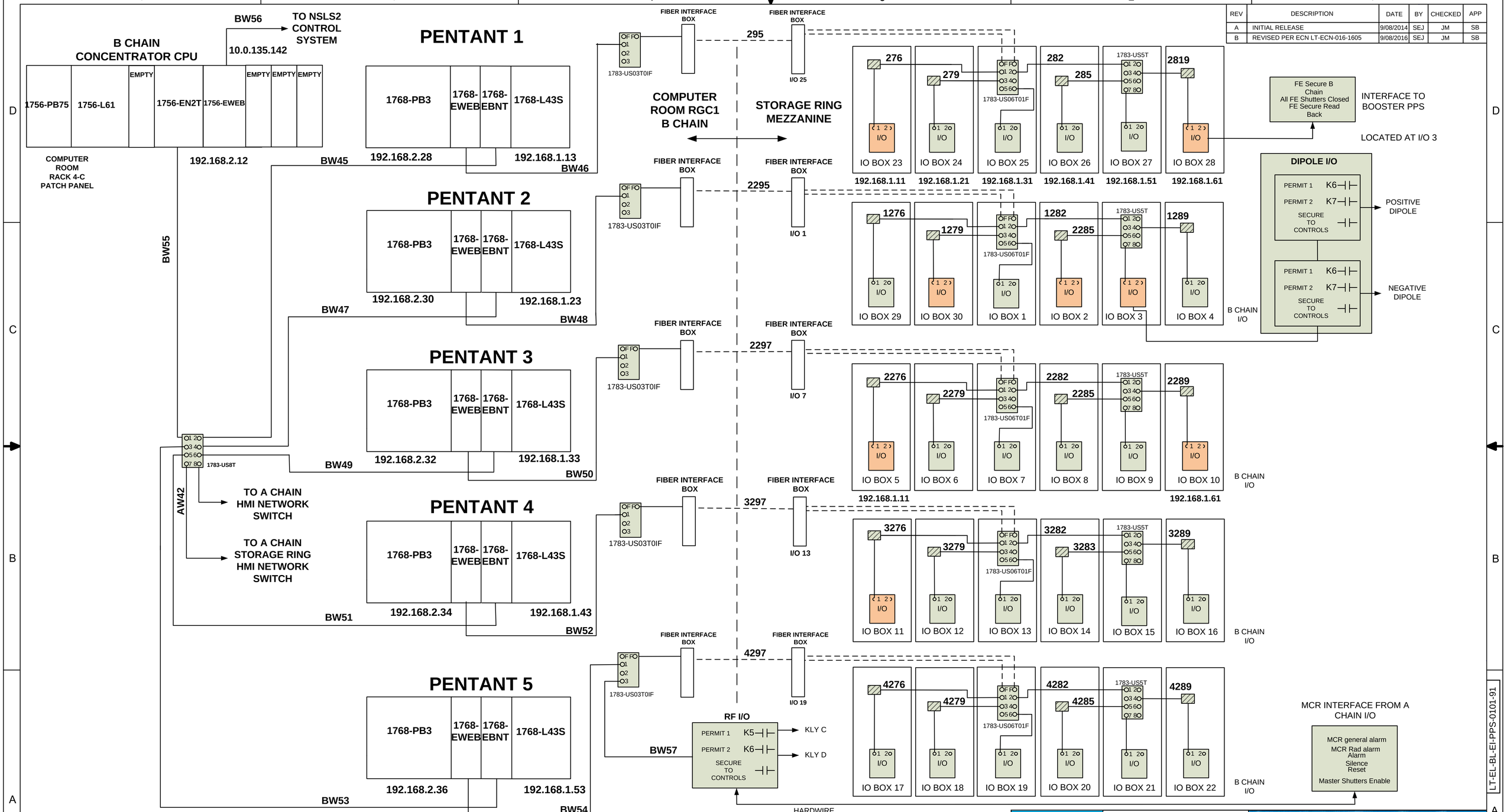

BROOKHAVEN NATIONAL LABORATORY

BROOKHAVEN NATIONAL LABORATORY
BROOKHAVEN SCIENCE ASSOCIATES
UPTON, NEW YORK 11973
Exploring Life's Mysteries, Protecting its Future

NSLS II NATIONAL SYNCHROTRON LIGHT SOURCE II

UNLESS OTHERWISE SPECIFIED
INTEGER TOLERANCES ± .06
DECIMAL TOLERANCES
.X ± .030
.XX ± .015
.XXX ± .010
ANGULAR TOLERANCE ± 0.5°
UNSPECIFIED RADII .02 MAX
125 BREAK SHARP CORNERS AND EDGES
FINISH MAX .03 MIN .005

UNLESS OTHERWISE SPECIFIED DIMENSIONS ARE IN INCHES DIMENSIONS IN [ ] ARE MILLIMETERS EQUIV. FOR REF. ONLY
INTERPRET DRAWING AS PER ANSI Y14.5 OR Y32.2

ESH&Q RISK LEVEL A-1
OUTSTANDING ECN'S

		DATE
DRWN BY	S. Jarzabkowski	9/08/2014
CHK BY	J. Malley	9/08/2014
ENG APP	S. Buda	9/08/2014
SUPV APP	G. Ganetis	9/10/2014
QA APP	E. Cheswick	9/08/2014
ESH APP	R. Lee	9/10/2014

WIRING DIAGRAM, FRONT END PPS CPU RACK B CHAIN

LT-EL-BL-EI (DRAWING DIRECTORY) | LT-EL-BL-EI-PPS-0101-91 (DRAWING NUMBER) | B (REV)

COMPUTER REPRODUCIBLE | SCALE: N/A | SHEET 1 OF 5

JOB NUMBER | USED ON DWG. NO.

LT-EL-BL-EI-PPS-0101-91

REV	DESCRIPTION	DATE	BY	CHECKED	APP
	SEE SHEET 1				

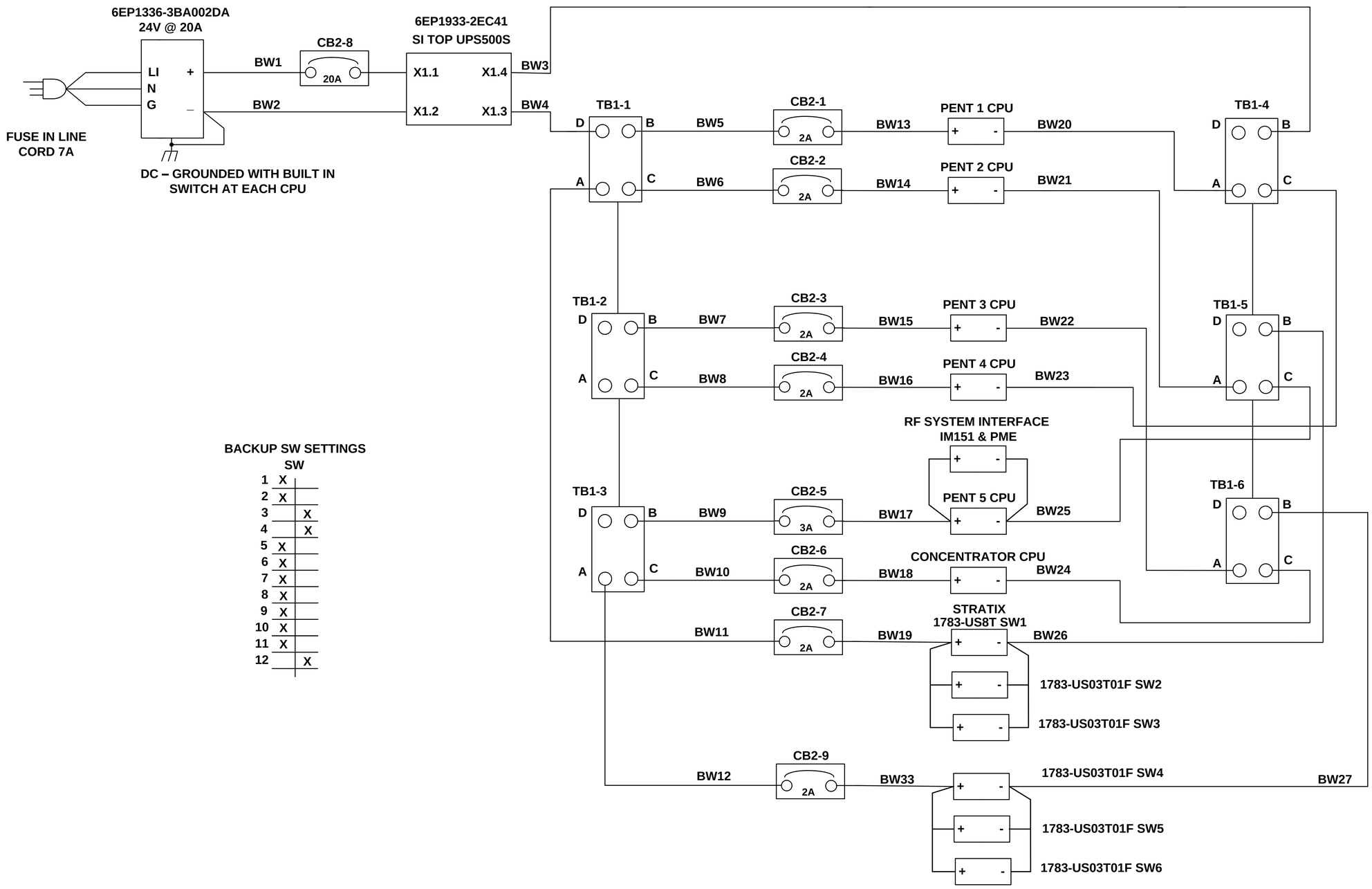

BACKUP SW SETTINGS

	SW	
1	X	
2	X	
3		X
4		X
5	X	
6	X	
7	X	
8	X	
9	X	
10	X	
11	X	
12		X

LT-EL-BL-EI-PPS-0101-91

LT-EL-BL-EI	LT-EL-BL-EI-PPS-0101-91	B
DRAWING DIRECTORY	DRAWING NUMBER	REV
COMPUTER REPRODUCIBLE	SCALE: N/A	SHEET 2 OF 5

REV	DESCRIPTION	BY	DATE	CHK	APP
	SEE SHEET 1				

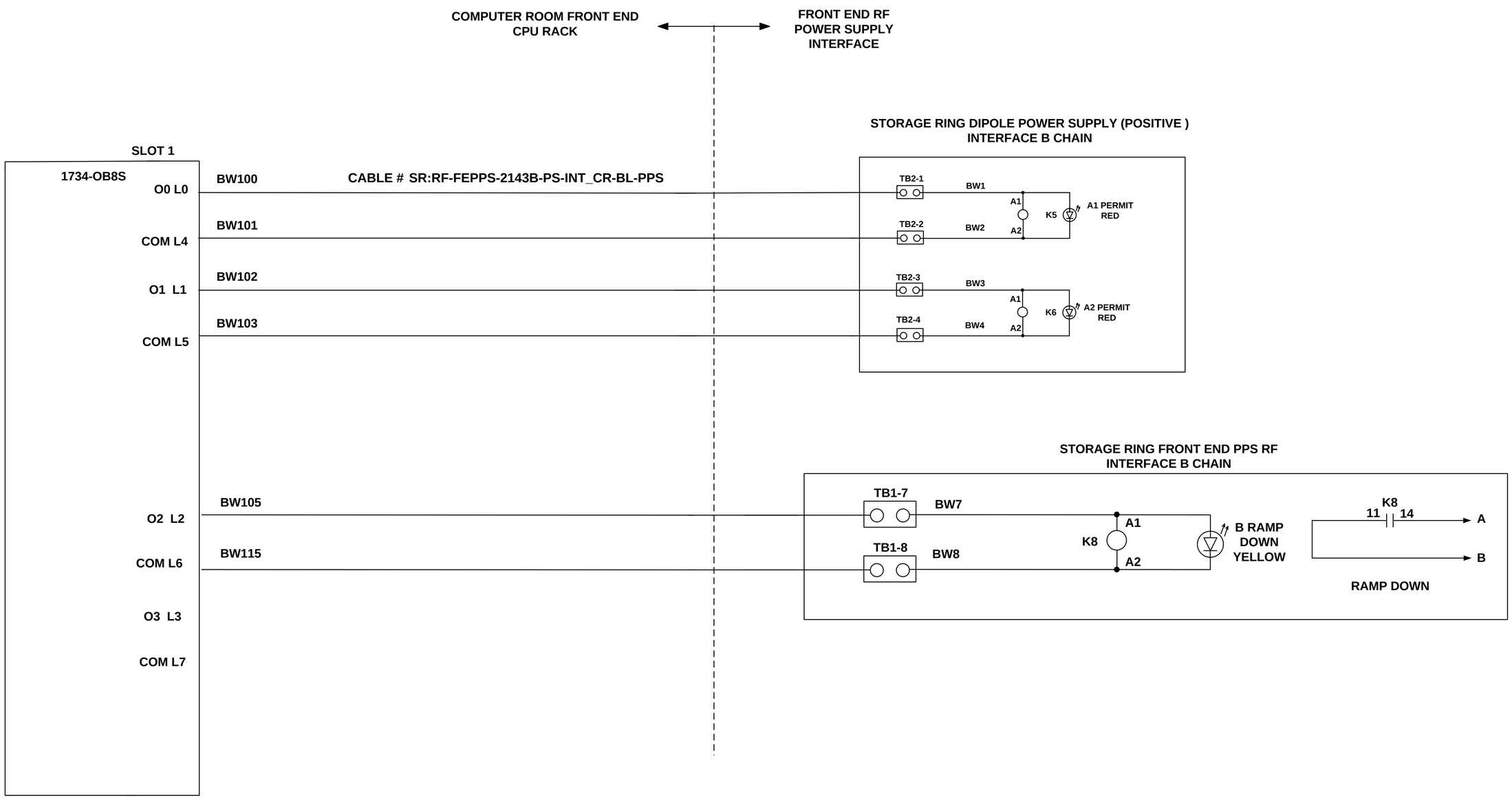

B

LT-EL-BL-EI	LT-EL-BL-EI-PPS-0101-91	B
DRAWING DIRECTORY	DRAWING NUMBER	REV

COMPUTER REPRODUCIBLE | SCALE: N/A | SHEET 3 OF 5

LT-EL-BL-EI-PPS-0101-91

REV	DESCRIPTION	BY	DATE	CHK	APP
	SEE SHEET 1				

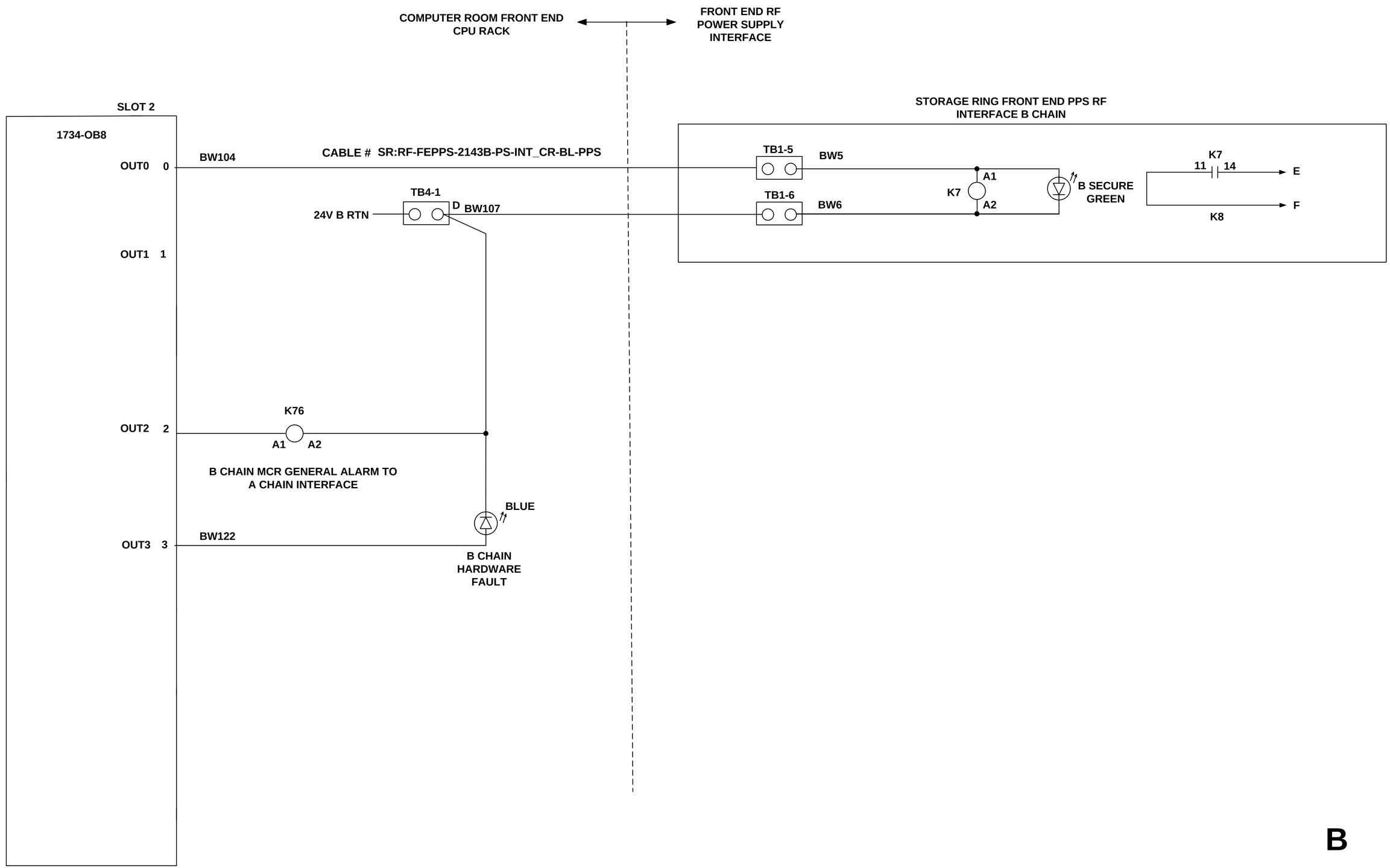

B

LT-EL-BL-EI	LT-EL-BL-EI-PPS-0101-91	B
DRAWING DIRECTORY	DRAWING NUMBER	REV.

COMPUTER REPRODUCIBLE | SCALE: N/A | SHEET 4 OF 5

LT-EL-BL-EI-PPS-0101-91

REV	DESCRIPTION	BY	DATE	CHK	APP
	SEE SHEET 1				

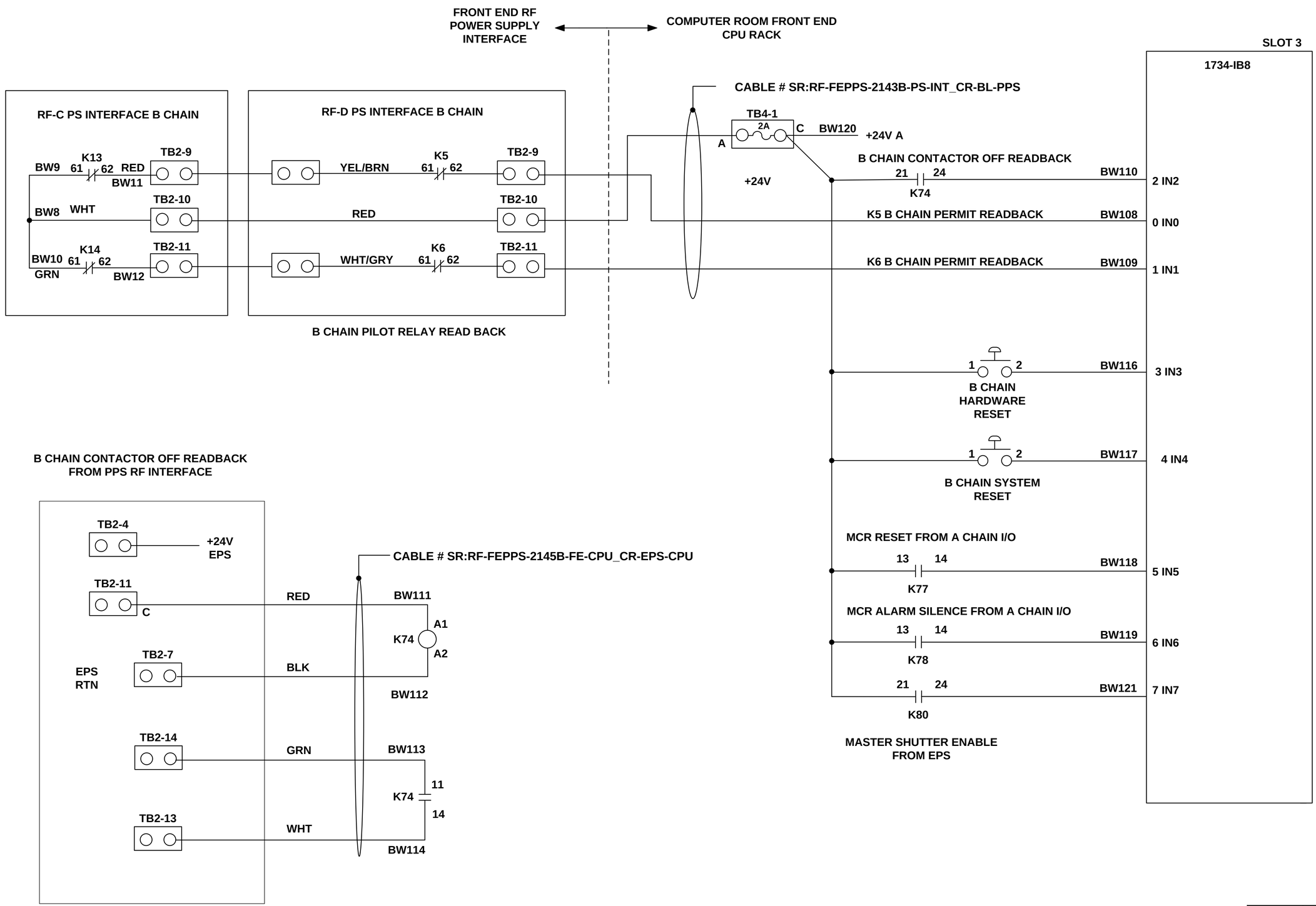

B

LT-EL-BL-EI (DRAWING DIRECTORY)	LT-EL-BL-EI-PPS-0101-91 (DRAWING NUMBER)	B (REV)
COMPUTER REPRODUCIBLE	SCALE: N/A	SHEET 5 OF 5

LT-EL-BL-EI-PPS-0101-91

REV	DESCRIPTION	BY	DATE	CHK	APP
A	RELEASED FOR PRODUCTION	CG	5-16-11	JM	SB
B	REVISED PER ECN 011-330	CG	7-13-11	JM	SB
C	REVISED PER ECN 013-575	CG	4-15-13	JM	SB
D	REVISED PER ECN 014-685	CG	10-16-13	JM	SB
E	REVISED PER LT-ECN-014-731	sro	1/17/14	JM	SB
F	REVISED PER LT-ECN-014-768	sro	3/16/14	JM	SB
G	REVISED PER LT-ECN-014-945	CG	07/09/2014	JM	SB
H	REVISED PER LT-ECN-014-968	SEJ	8/18/2014	JM	SB
J	REVISED PER LT-ECN-015-1036	CG	11-20-14	JM	SB
K	REVISED PER ECN LT-ECN-015-1097	SEJ	12-22-14	JM	SB

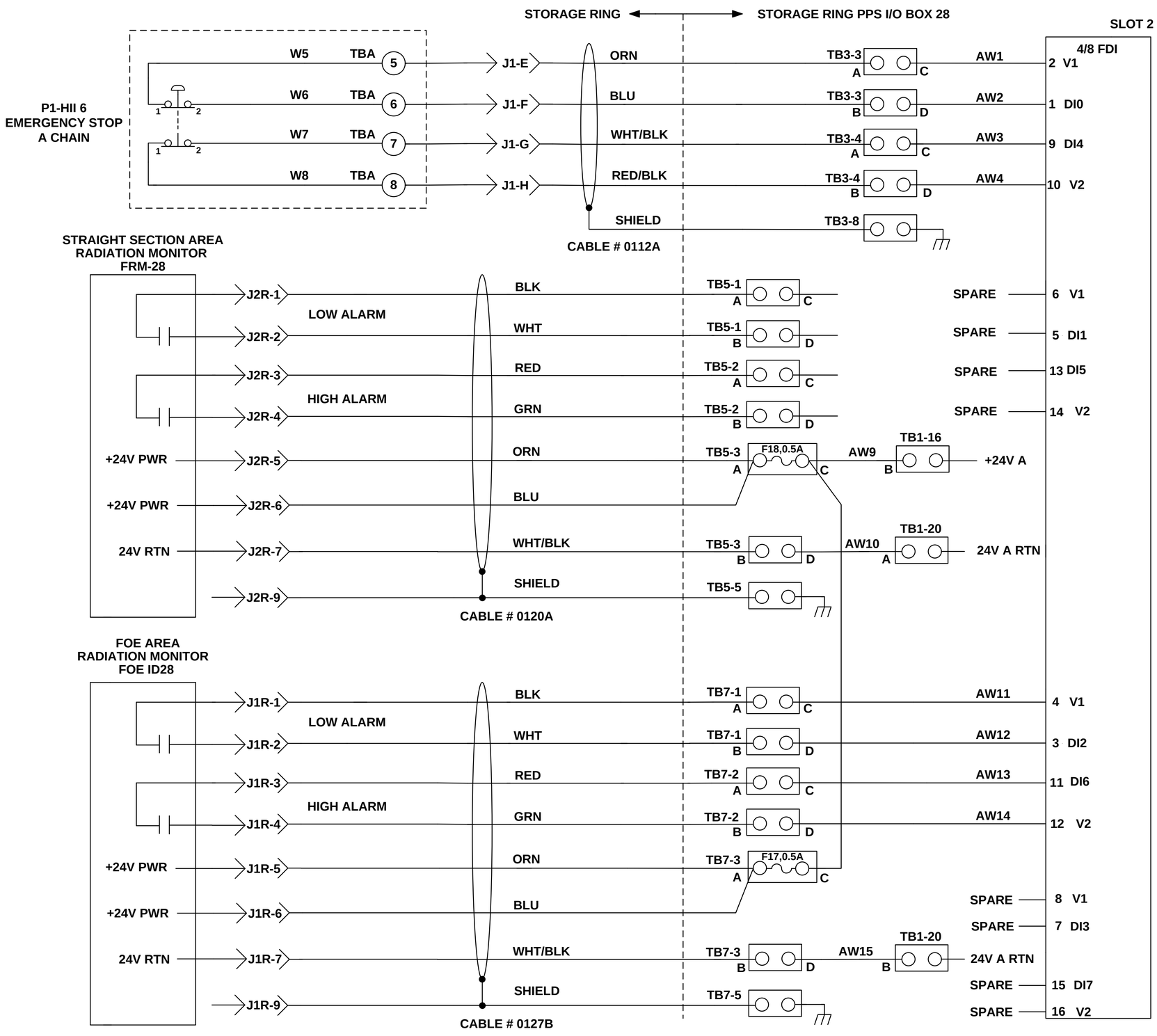

ID BEAMLINE INSTALLED X

BM BEAMLINE INSTALLED ☐

SHUTTER OVERTEMPERATURE CIRCUITRY NOT USED

COMMON GROUP

A

HIGHEST WIRE REF DES	AW15
UNUSED WIRE REF DES	AW16-AW21
WIRE REF DES NOT USED	AW5,6,7,8

SEE SEPARATE WIRE RUNNING LIST RL LT-EL-SR-EI-PPS-0228-90

SEE SEPARATE PARTS LIST PL LT-EL-SR-EI-PPS-0228-90

LT-EL-SR-EI-PPS-0228-90

BROOKHAVEN NATIONAL LABORATORY

BROOKHAVEN NATIONAL LABORATORY
BROOKHAVEN SCIENCE ASSOCIATES
UPTON, NEW YORK 11973
Exploring Life's Mysteries, Protecting its Future

NSLS II NATIONAL SYNCHROTRON LIGHT SOURCE II

UNLESS OTHERWISE SPECIFIED
INTEGER TOLERANCES ± .06
DECIMAL TOLERANCES
.X ± .030
.XX ± .015
.XXX ± .010
ANGULAR TOLERANCE ± 0.5°
UNSPECIFIED RADII .02 MAX
125 BREAK SHARP CORNERS AND EDGES
FINISH MAX .03 MIN .005

UNLESS OTHERWISE SPECIFIED DIMENSIONS ARE IN INCHES DIMENSIONS IN [ ] ARE MILLIMETERS EQUIV. FOR REF. ONLY

ESH&Q RISK LEVEL A-2

INTERPRET DRAWING AS PER ANSI Y14.5 OR Y32.2

		DATE	OUTSTANDING ECN'S
DRWN BY	C. GUARINO	4-11-11	
CHK BY	J. MALLEY	4-25-11	
ENG APP	S. BUDA	4-19-11	
SUPV APP	G. GANETIS	4-29-11	
QA APP	E. CHESWICK	4-28-11	
ESH APP	B. LEE	4-28-11	

JOB NUMBER | USED ON DWG. NO.

WIRING DIAGRAM
STORAGE RING PPS I/O BOX 28
TYPE 1 A CHAIN & B CHAIN

LT-EL-SR-EI (DRAWING DIRECTORY) | LT-EL-SR-EI-PPS-0228-90 (DRAWING NUMBER) | K (REV)

WBS # 1.03.06.01.03 | SCALE: N/A | SHEET 1 OF 63

REV	DESCRIPTION	BY	DATE	CHK	APP
	SEE SHEET 1				

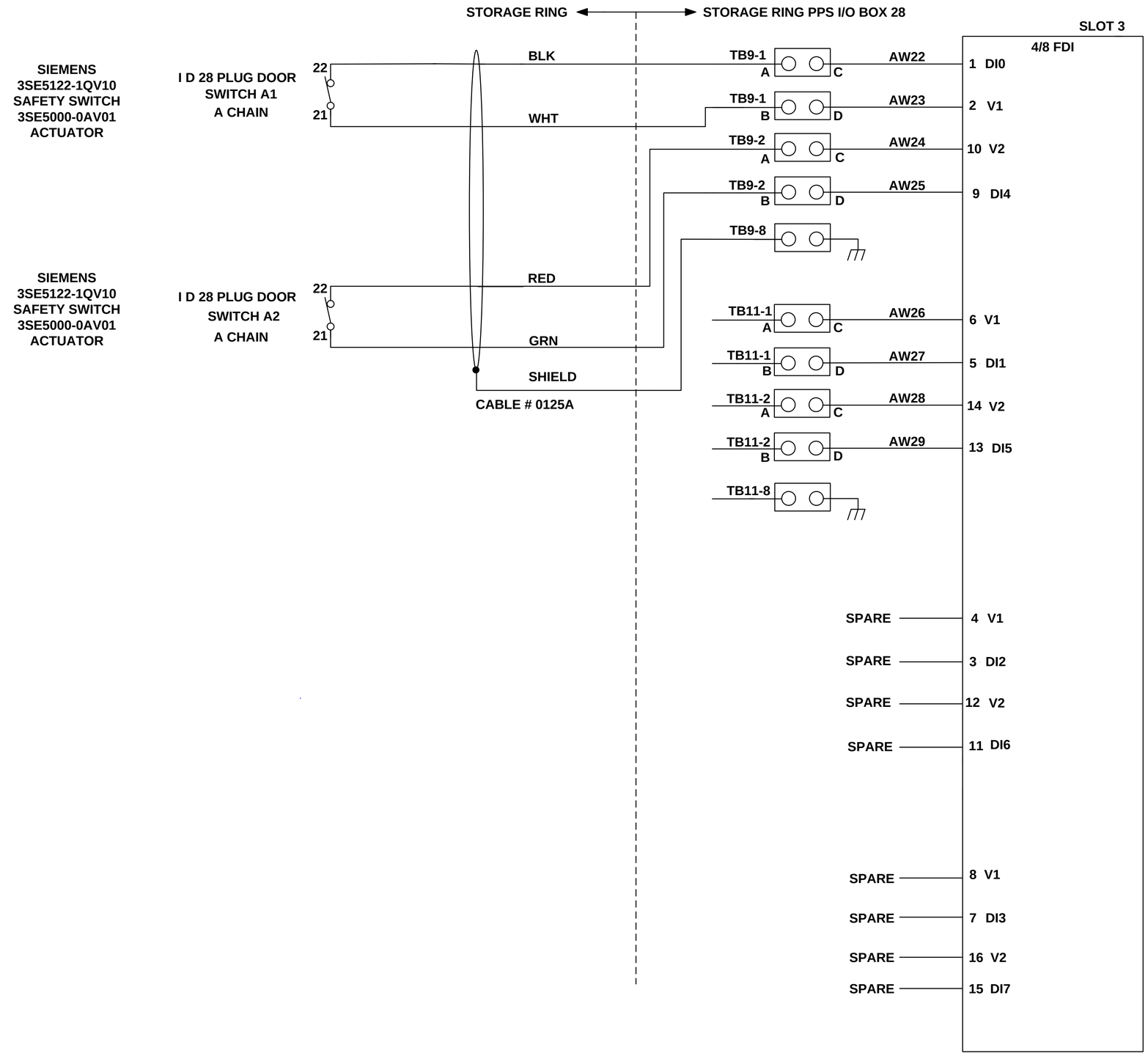

COMMON GROUP

A

HIGHEST WIRE REF DES	AW29
UNUSED WIRE REF DES	AW30-AW34
WIRE REF DES NOT USED	————

LT-EL-SR-EI-PPS-0228-90

LT-EL-SR-EI DRAWING DIRECTORY	LT-EL-SR-EI-PPS-0228-90 DRAWING NUMBER	K REV
COMPUTER REPRODUCIBLE	SCALE: N/A	SHEET 2 OF 63

REV	DESCRIPTION	BY	DATE	CHK	APP
	SEE SHEET 1				

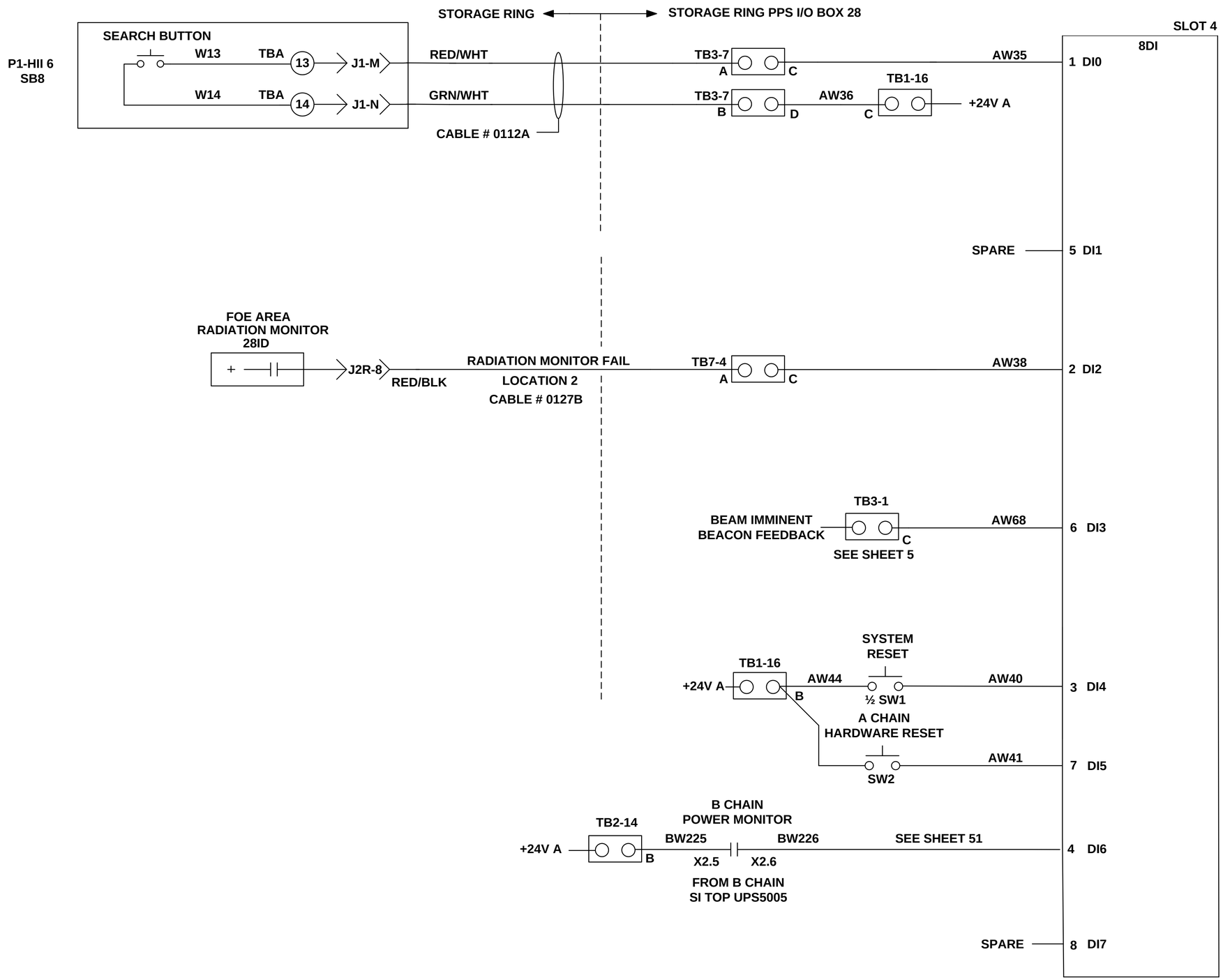

COMMON GROUP

A

HIGHEST WIRE REF DES	AW44
UNUSED WIRE REF DES	AW45,AW46
WIRE REF DES NOT USED	AW39,AW42

LT-EL-SR-EI-PPS-0228-90

LT-EL-SR-EI DRAWING DIRECTORY	LT-EL-SR-EI-PPS-0228-90 DRAWING NUMBER	K REV
COMPUTER REPRODUCIBLE	SCALE: N/A	SHEET 3 OF 63

REV	DESCRIPTION	BY	DATE	CHK	APP
	SEE SHEET 1				

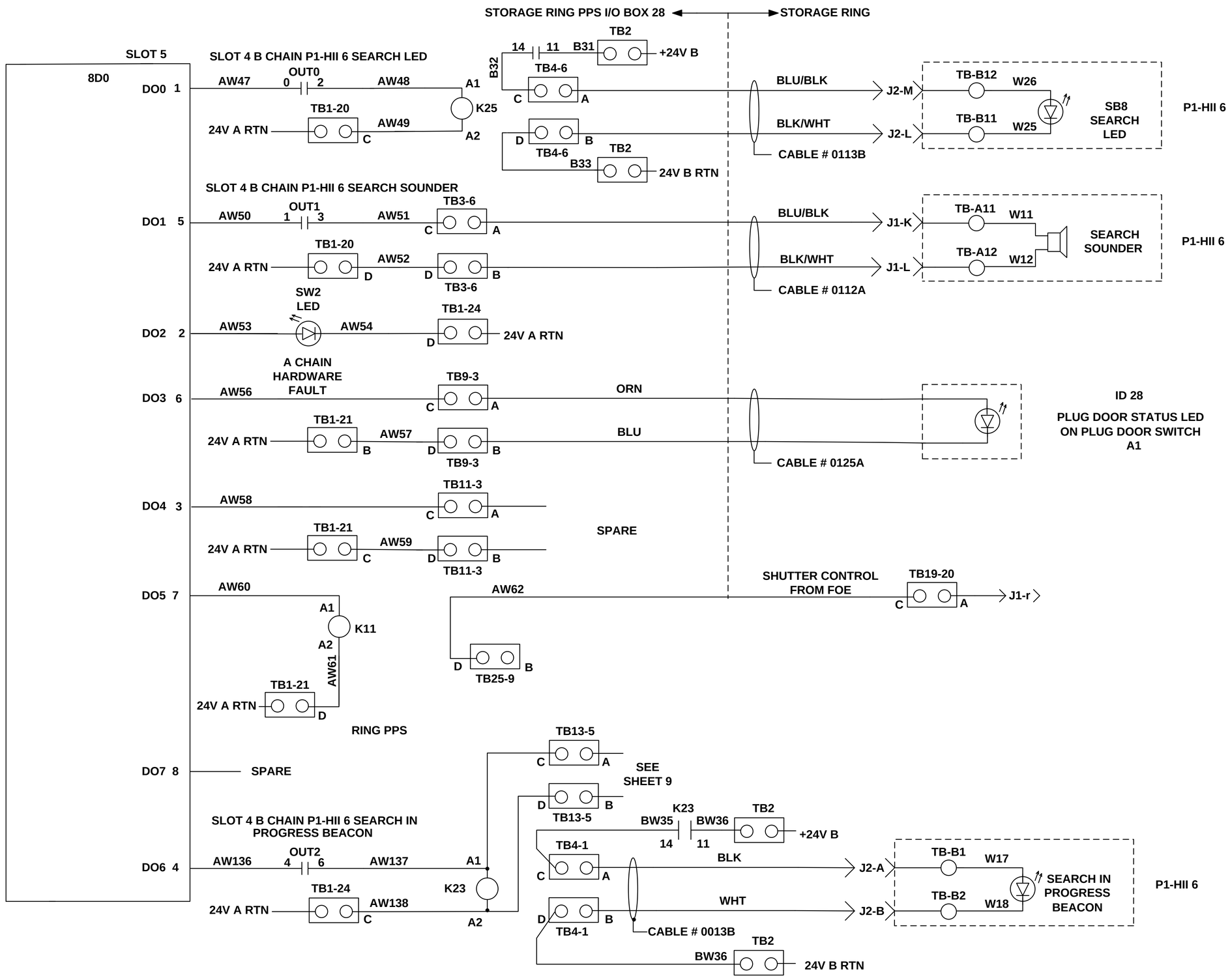

COMMON GROUP

A

HIGHEST WIRE REF DES	AW138
UNUSED WIRE REF DES	AW64
WIRE REF DES NOT USED	AW55

LT-EL-SR-EI-PPS-0228-90

LT-EL-SR-EI (DRAWING DIRECTORY)	LT-EL-SR-EI-PPS-0228-90 (DRAWING NUMBER)	K (REV)
COMPUTER REPRODUCIBLE	SCALE: N/A	SHEET 4 OF 63

REV	DESCRIPTION	BY	DATE	CHK	APP
	SEE SHEET 1				

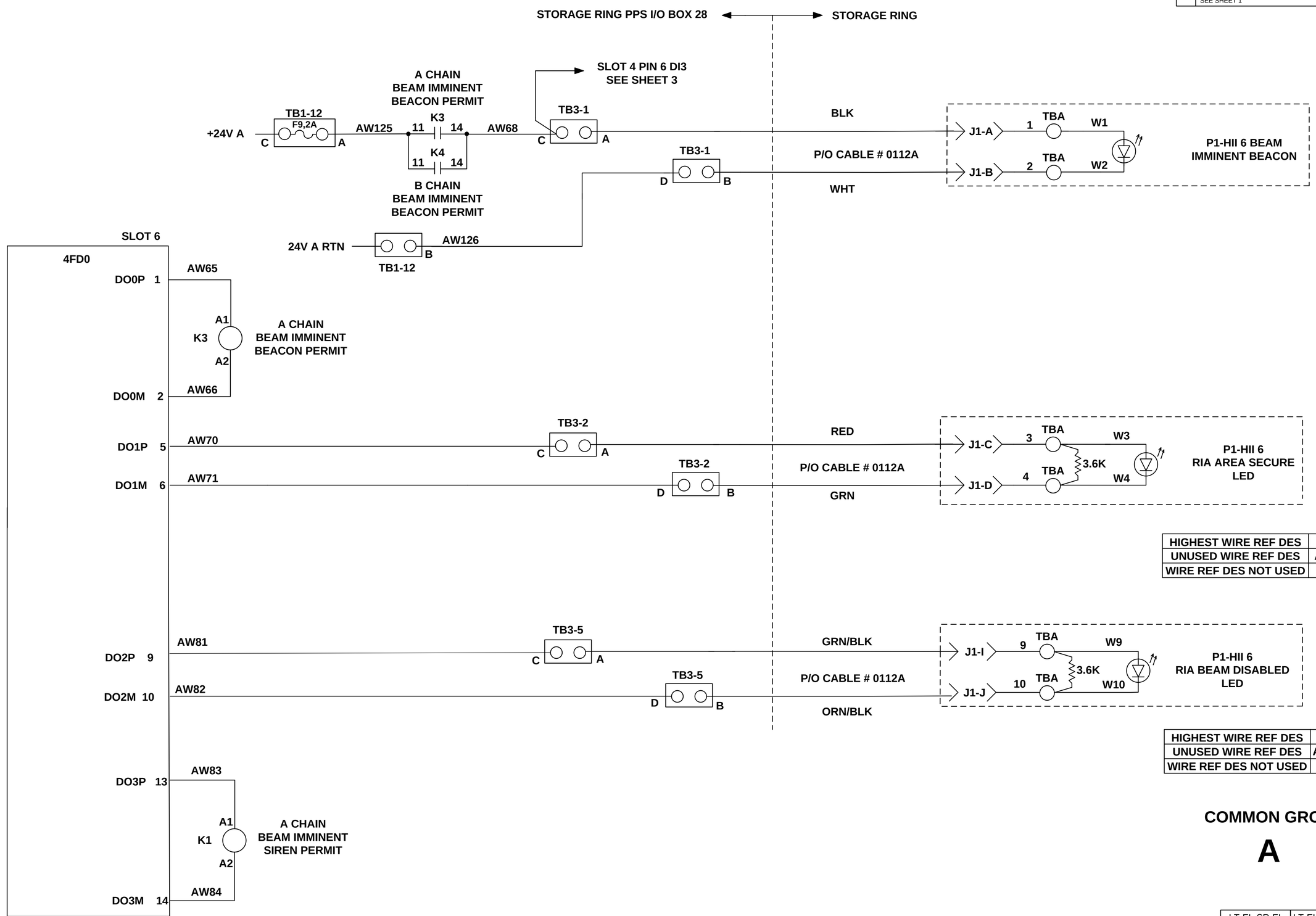

HIGHEST WIRE REF DES	AW73
UNUSED WIRE REF DES	AW74-AW80
WIRE REF DES NOT USED	————

HIGHEST WIRE REF DES	AW84
UNUSED WIRE REF DES	AW85-AW88
WIRE REF DES NOT USED	————

COMMON GROUP

A

LT-EL-SR-EI-PPS-0228-90

LT-EL-SR-EI (DRAWING DIRECTORY)	LT-EL-SR-EI-PPS-0228-90 (DRAWING NUMBER)	K (REV)
COMPUTER REPRODUCIBLE	SCALE: N/A	SHEET 5 OF 63

REV	DESCRIPTION	BY	DATE	CHK	APP
	SEE SHEET 1				

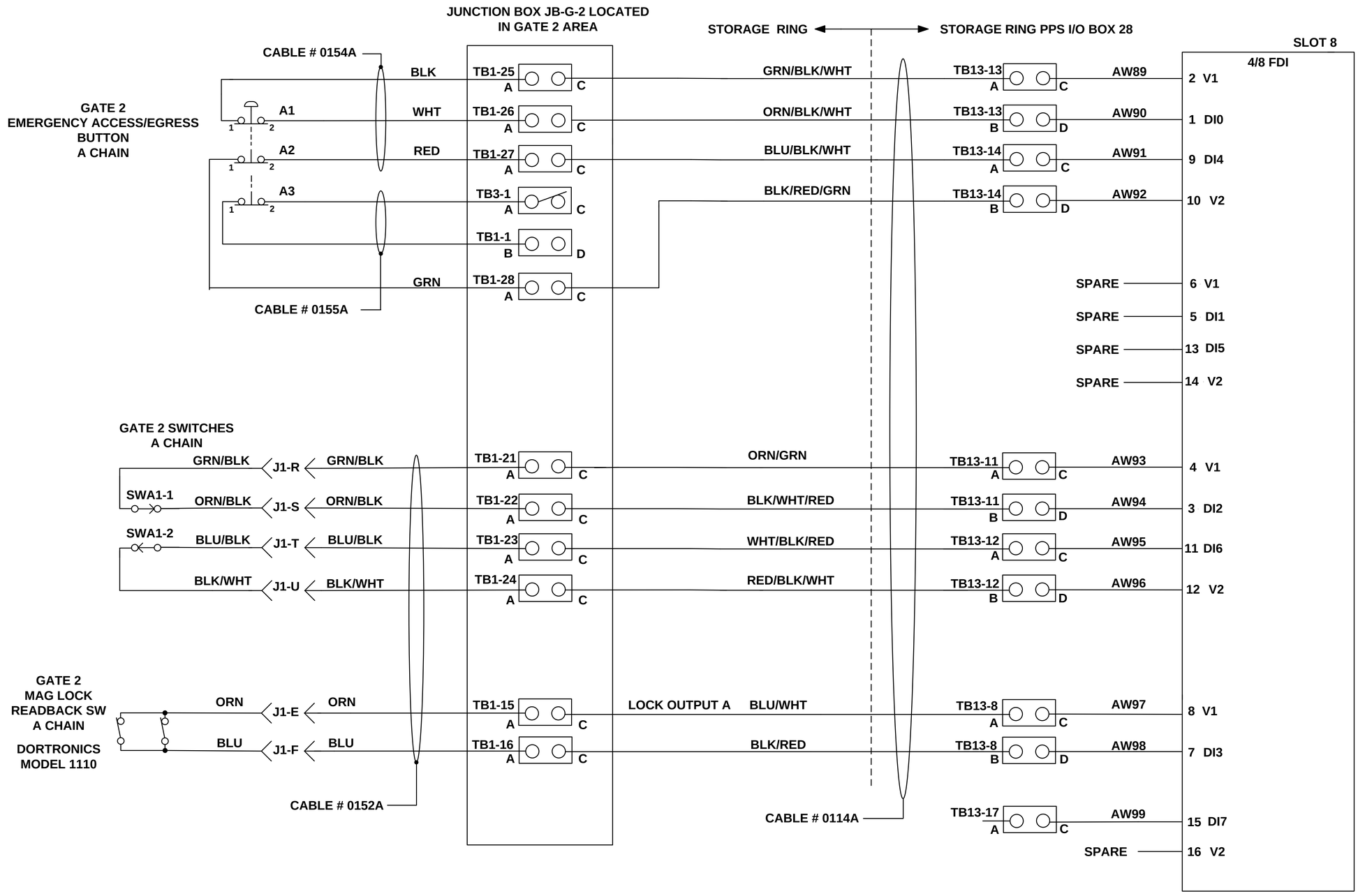

GATE / LABRYNTH GROUP

A

GATE 2

HIGHEST WIRE REF DES	AW99
UNUSED WIRE REF DES	AW100-AW104
WIRE REF DES NOT USED	————

LT-EL-SR-EI-PPS-0228-90

LT-EL-SR-EI (DRAWING DIRECTORY)	LT-EL-SR-EI-PPS-0228-90 (DRAWING NUMBER)	K (REV)
COMPUTER REPRODUCIBLE	SCALE: N/A	SHEET 6 OF 63

REV	DESCRIPTION	BY	DATE	CHK	APP
	SEE SHEET 1				

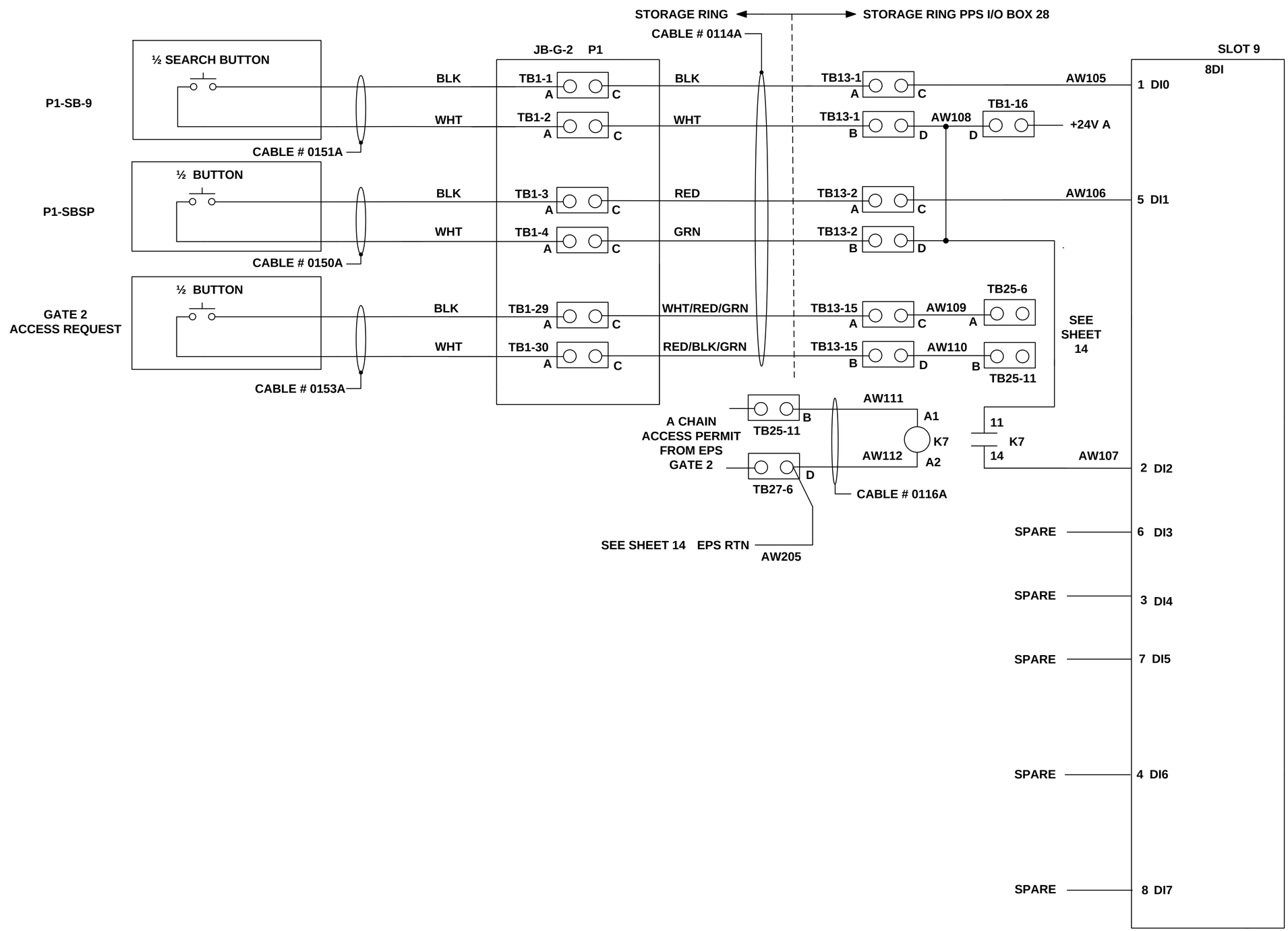

GATE / LABRYNTH GROUP

A

GATE 2

HIGHEST WIRE REF DES	AW112
UNUSED WIRE REF DES	———
WIRE REF DES NOT USED	———

LT-EL-SR-EI-PPS-0228-90

LT-EL-SR-EI (DRAWING DIRECTORY)	LT-EL-SR-EI-PPS-0228-90 (DRAWING NUMBER)	K (REV)
COMPUTER REPRODUCIBLE	SCALE: N/A	SHEET 7 OF 63

REV	DESCRIPTION	BY	DATE	CHK	APP
	SEE SHEET 1				

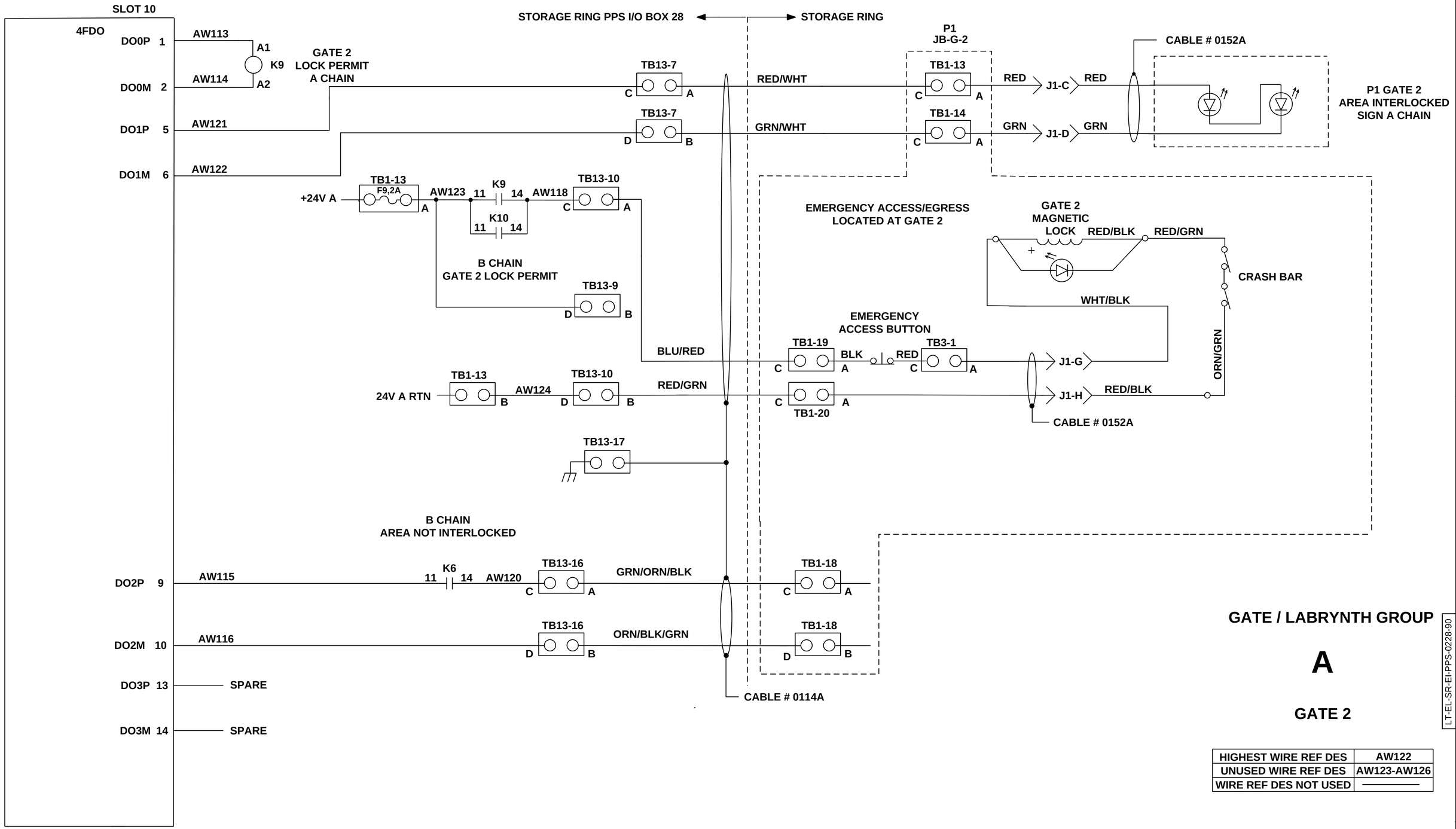

GATE / LABRYNTH GROUP

A

GATE 2

HIGHEST WIRE REF DES	AW122
UNUSED WIRE REF DES	AW123-AW126
WIRE REF DES NOT USED	————

LT-EL-SR-EI-PPS-0228-90

LT-EL-SR-EI (DRAWING DIRECTORY)	LT-EL-SR-EI-PPS-0228-90 (DRAWING NUMBER)	K (REV)
COMPUTER REPRODUCIBLE	SCALE: N/A	SHEET 8 OF 63

REV	DESCRIPTION	BY	DATE	CHK	APP
	SEE SHEET 1				

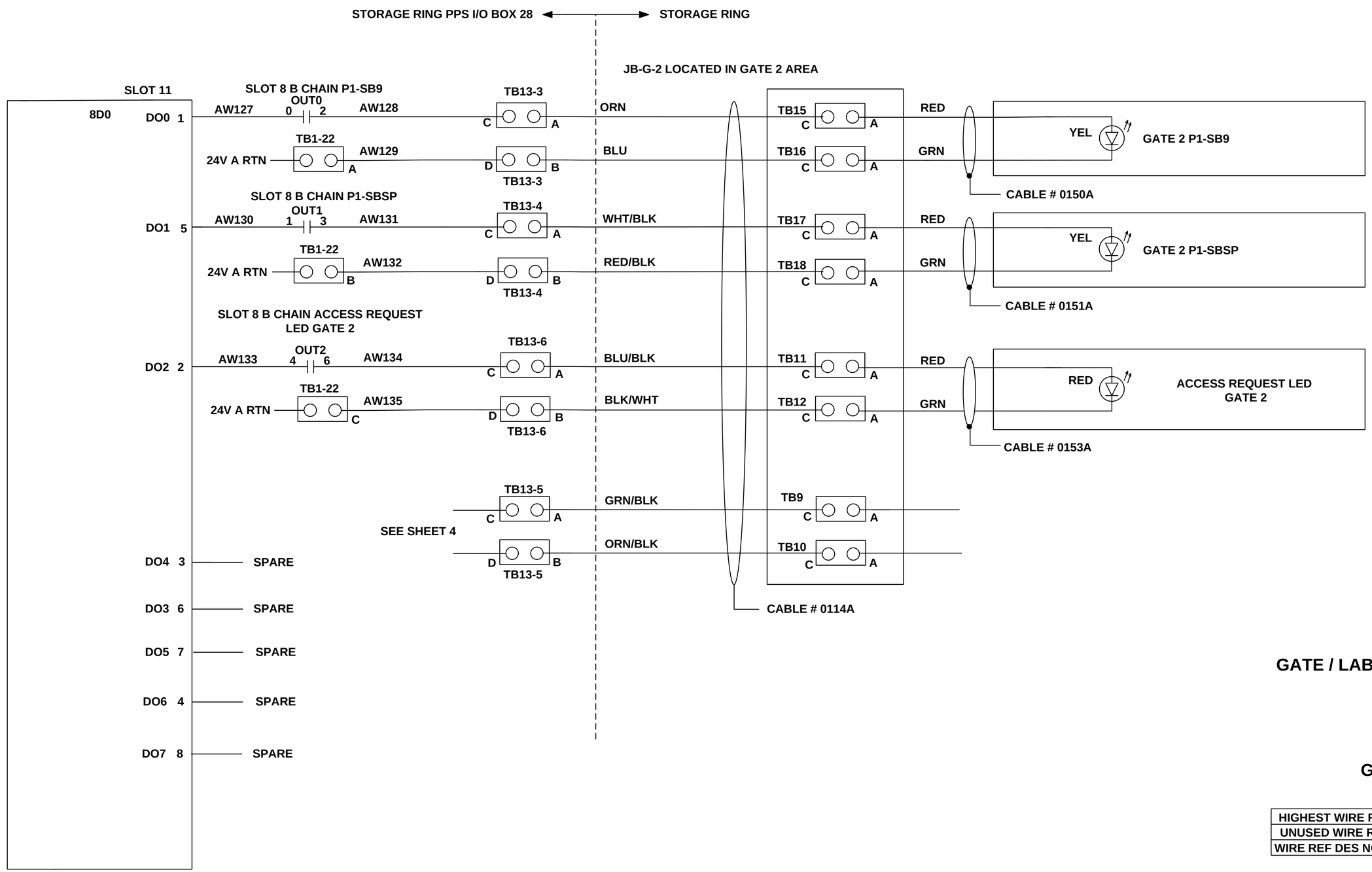

GATE / LABRYNTH GROUP

A

GATE 2

HIGHEST WIRE REF DES	AW135
UNUSED WIRE REF DES	AW139-AW140
WIRE REF DES NOT USED	————

LT-EL-SR-EI-PPS-0228-90

LT-EL-SR-EI (DRAWING DIRECTORY)	LT-EL-SR-EI-PPS-0228-90 (DRAWING NUMBER)	K (REV)
COMPUTER REPRODUCIBLE	SCALE: N/A	SHEET 9 OF 63

REV	DESCRIPTION	BY	DATE	CHK	APP
	SEE SHEET 1				

LT-EL-SR-EI-PPS-0228-90

SHEET LEFT BLANK
FOR FUTURE DATA

LT-EL-SR-EI	LT-EL-SR-EI-PPS-0228-90	K
DRAWING DIRECTORY	DRAWING NUMBER	REV
COMPUTER REPRODUCIBLE	SCALE: N/A	SHEET 10 OF 63

REV	DESCRIPTION	BY	DATE	CHK	APP
	SEE SHEET 1				

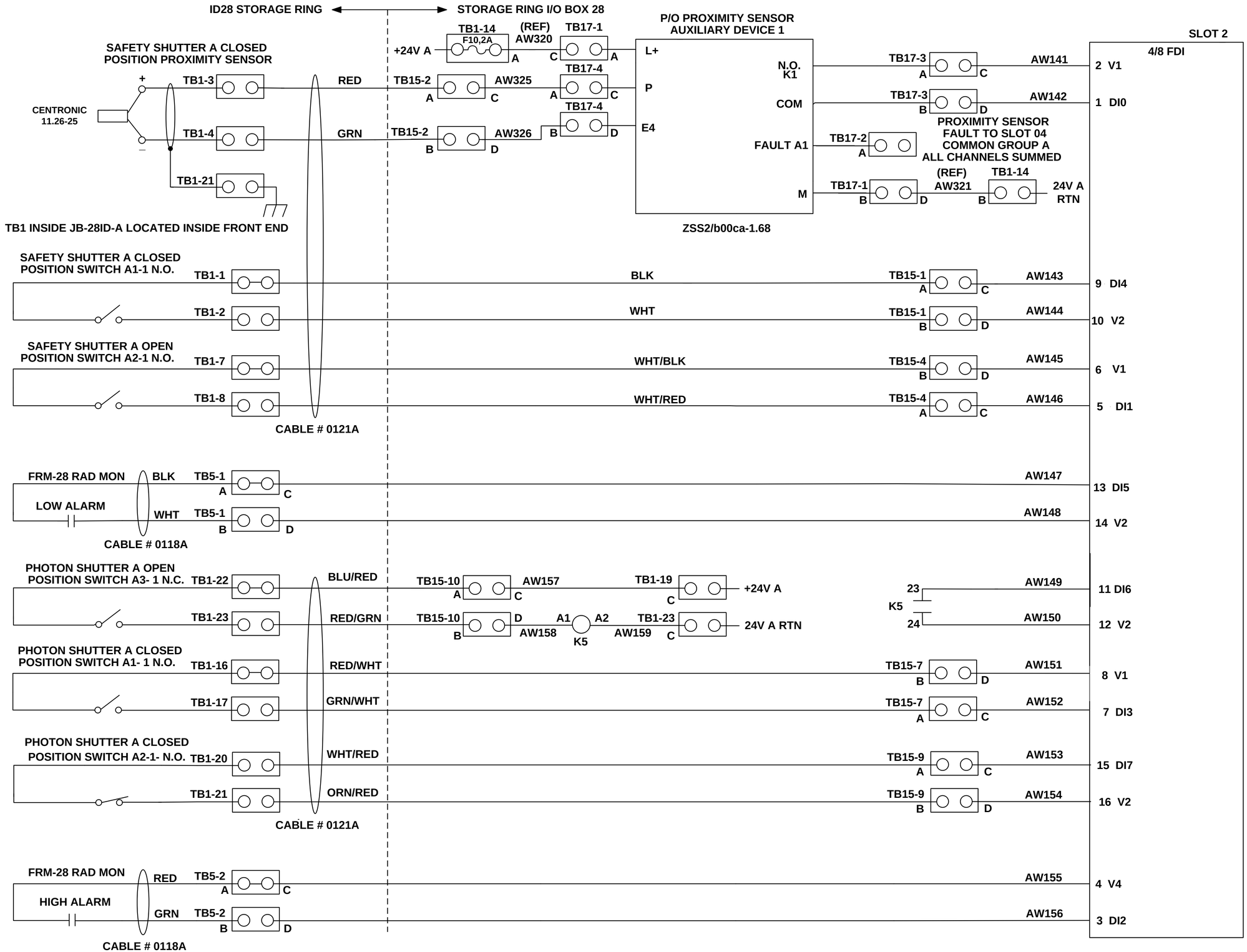

ID BEAMLINE GROUP

A

28ID

HIGHEST WIRE REF DES	AW159
UNUSED WIRE REF DES	AW160
WIRE REF DES NOT USED	———

LT-EL-SR-EI-PPS-0228-90

LT-EL-SR-EI (DRAWING DIRECTORY)	LT-EL-SR-EI-PPS-0228-90 (DRAWING NUMBER)	K (REV)
COMPUTER REPRODUCIBLE	SCALE: N/A	SHEET 11 OF 63

REV	DESCRIPTION	BY	DATE	CHK	APP
	SEE SHEET 1	CG			

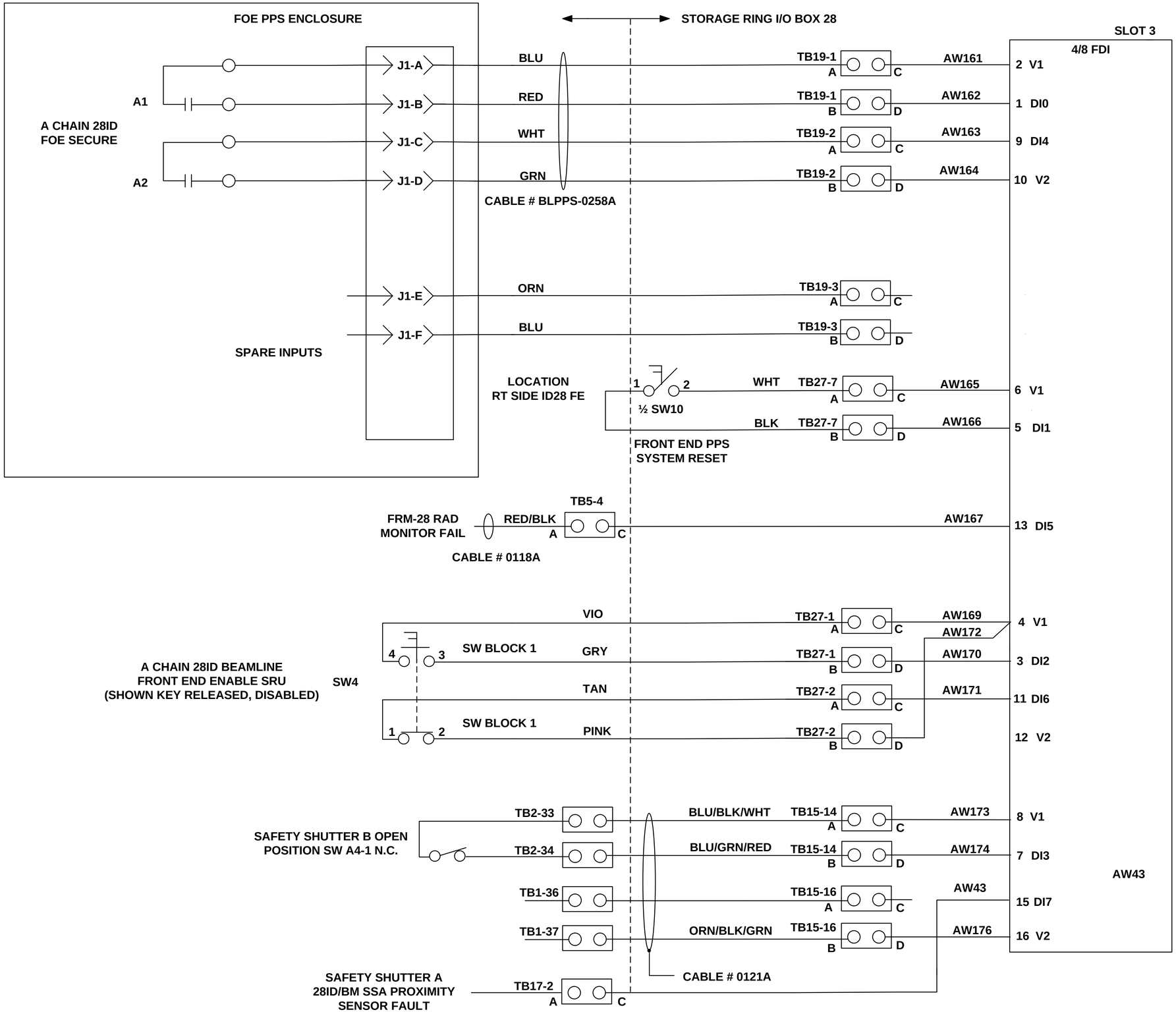

ID BEAMLINE GROUP

A

28ID

HIGHEST WIRE REF DES	AW176
UNUSED WIRE REF DES	AW177-AW180
WIRE REF DES NOT USED	———

LT-EL-SR-EI-PPS-0228-90

LT-EL-SR-EI (DRAWING DIRECTORY)	LT-EL-SR-EI-PPS-0228-90 (DRAWING NUMBER)	K (REV)
COMPUTER REPRODUCIBLE	SCALE: N/A	SHEET 12 OF 63

REV	DESCRIPTION	BY	DATE	CHK	APP
	SEE SHEET 1				

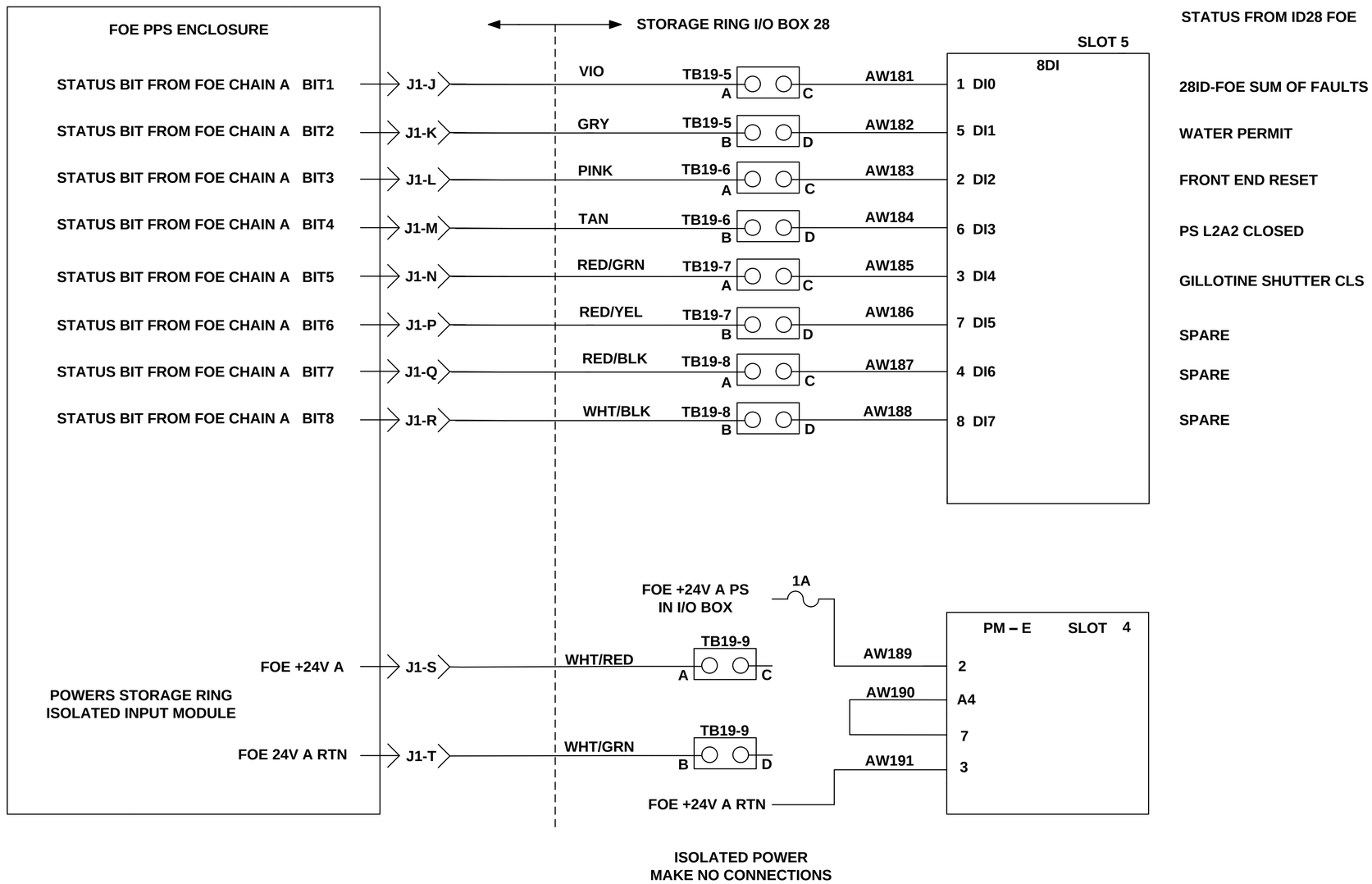

ID BEAMLINE GROUP

A

28ID

HIGHEST WIRE REF DES	AW191
UNUSED WIRE REF DES	AW192-AW195
WIRE REF DES NOT USED	————

LT-EL-SR-EI-PPS-0228-90

LT-EL-SR-EI DRAWING DIRECTORY	LT-EL-SR-EI-PPS-0228-90 DRAWING NUMBER	K REV
COMPUTER REPRODUCIBLE	SCALE: N/A	SHEET 13 OF 63

REV	DESCRIPTION	BY	DATE	CHK	APP
	SEE SHEET 1				

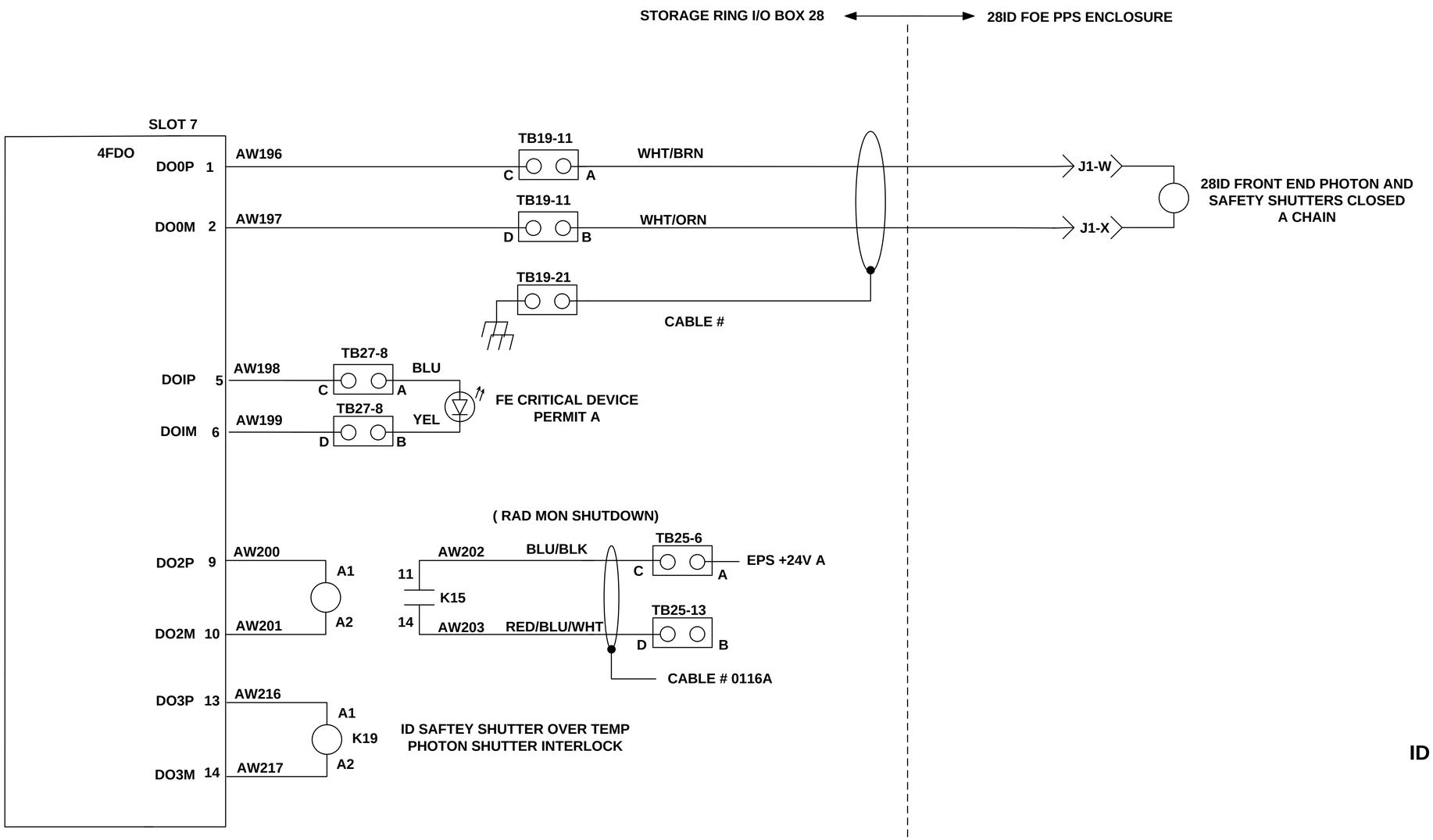

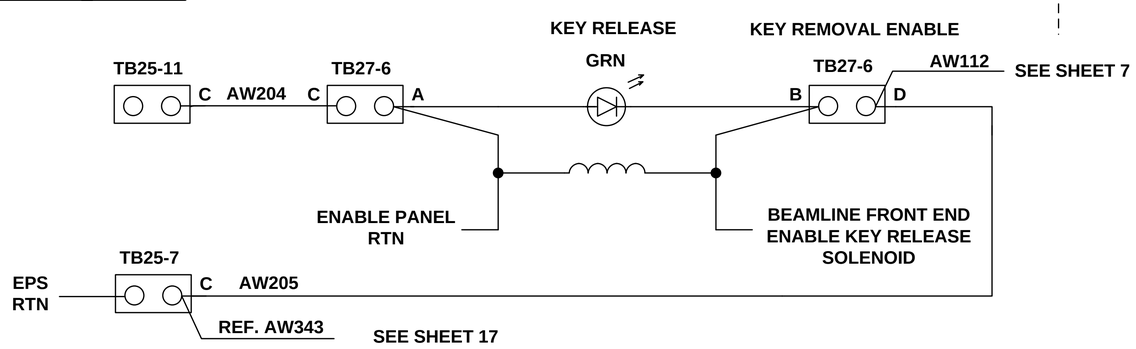

ID BEAMLINE GROUP

A

28ID

HIGHEST WIRE REF DES	AW205
UNUSED WIRE REF DES	———
WIRE REF DES NOT USED	———

LT-EL-SR-EI-PPS-0228-90

LT-EL-SR-EI DRAWING DIRECTORY	LT-EL-SR-EI-PPS-0228-90 DRAWING NUMBER	K REV
COMPUTER REPRODUCIBLE	SCALE: N/A	SHEET 14 OF 63

REV	DESCRIPTION	BY	DATE	CHK	APP
	SEE SHEET 1				

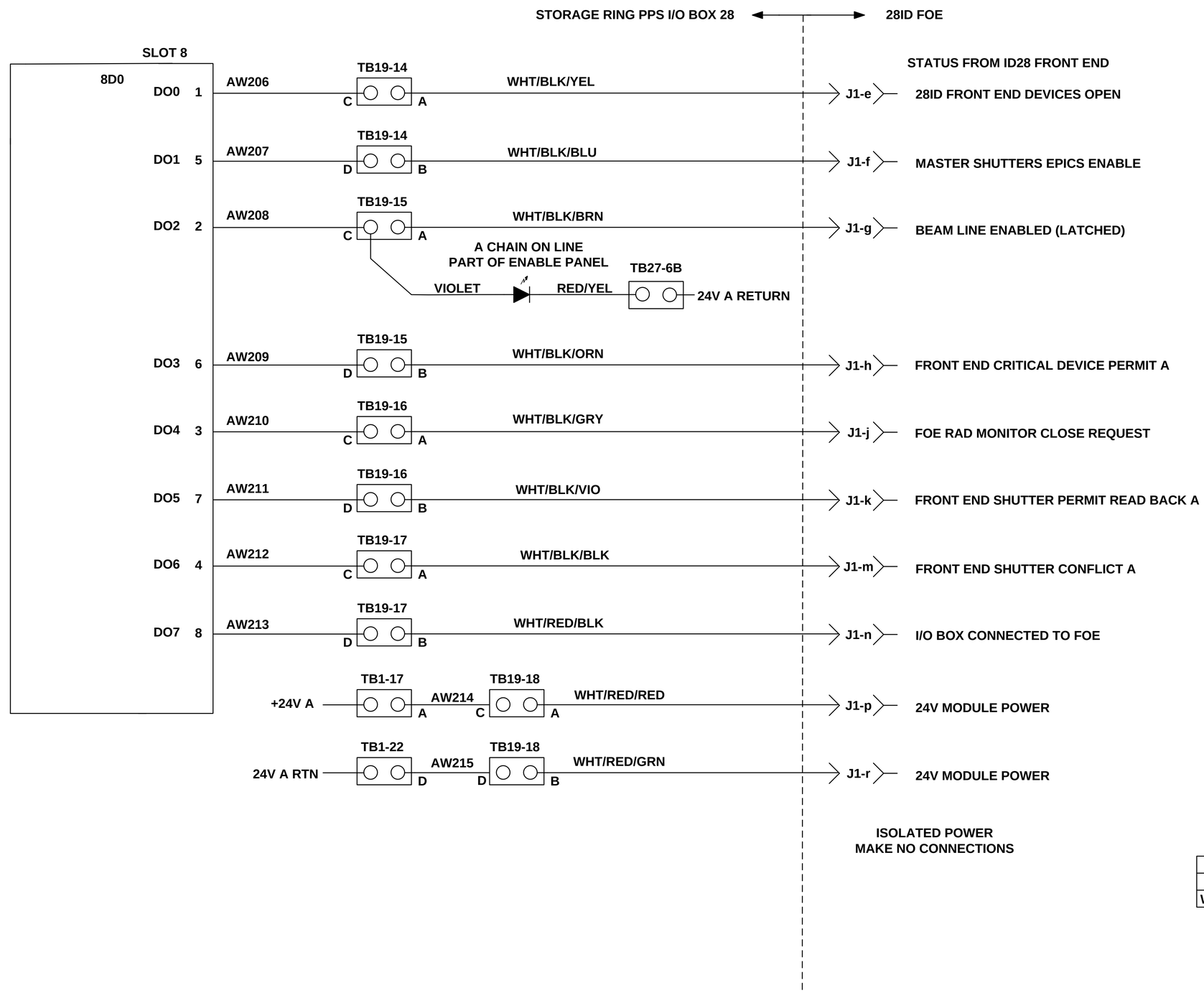

ID BEAMLINE GROUP

A

28ID

LT-EL-SR-EI-PPS-0228-90

HIGHEST WIRE REF DES	AW215
UNUSED WIRE REF DES	AW216-AW218
WIRE REF DES NOT USED	————

LT-EL-SR-EI DRAWING DIRECTORY	LT-EL-SR-EI-PPS-0228-90 DRAWING NUMBER	K REV
COMPUTER REPRODUCIBLE	SCALE: N/A	SHEET 15 OF 63

REV	DESCRIPTION	BY	DATE	CHK	APP
	SEE SHEET 1				

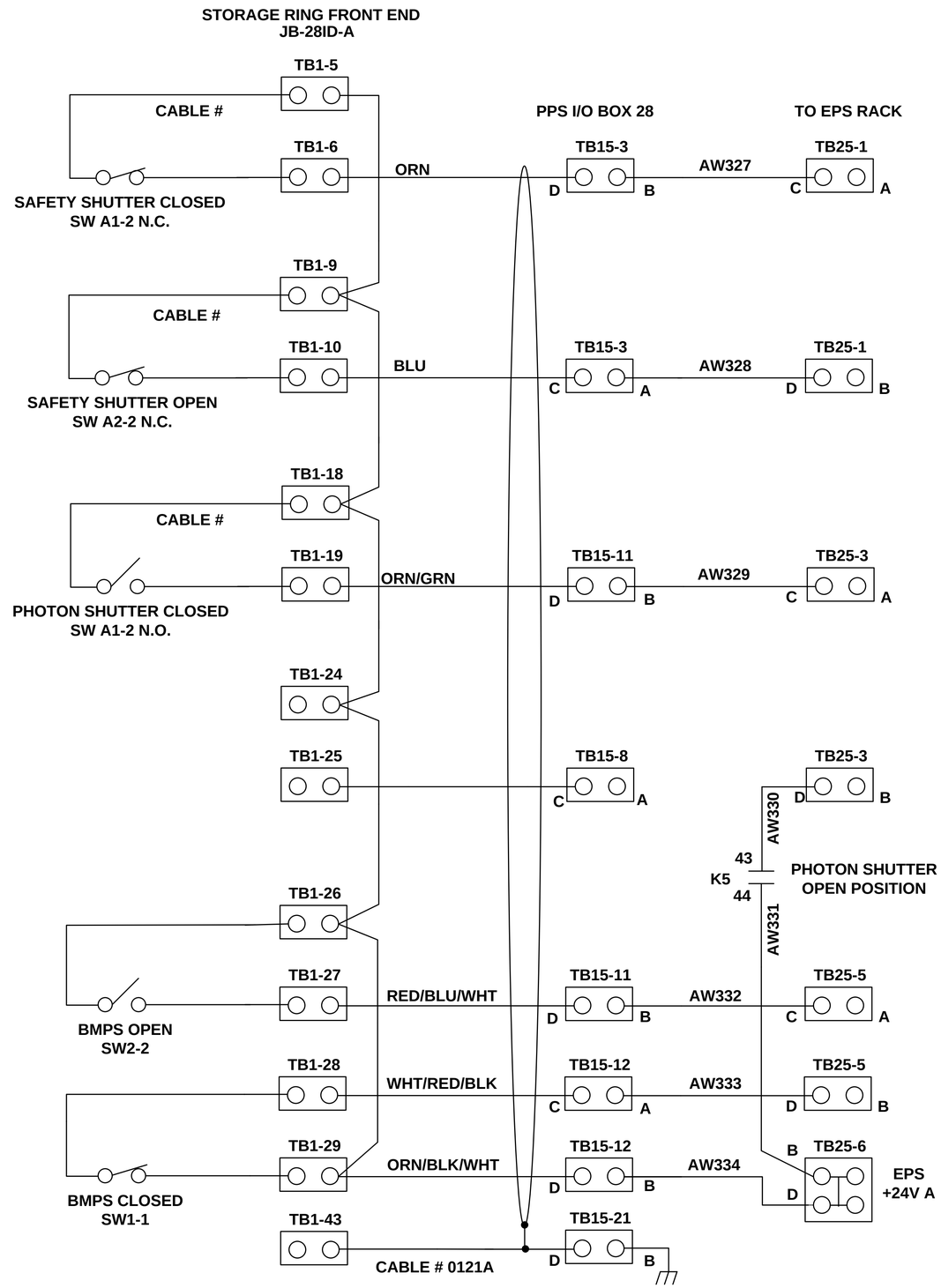

ID BEAMLINE GROUP

A

28ID

HIGHEST WIRE REF DES	AW334
UNUSED WIRE REF DES	———
WIRE REF DES NOT USED	———

LT-EL-SR-EI-PPS-0228-90

LT-EL-SR-EI DRAWING DIRECTORY	LT-EL-SR-EI-PPS-0228-90 DRAWING NUMBER	K REV
COMPUTER REPRODUCIBLE	SCALE: N/A	SHEET 16 OF 63

REV	DESCRIPTION	BY	DATE	CHK	APP
	SEE SHEET 1				

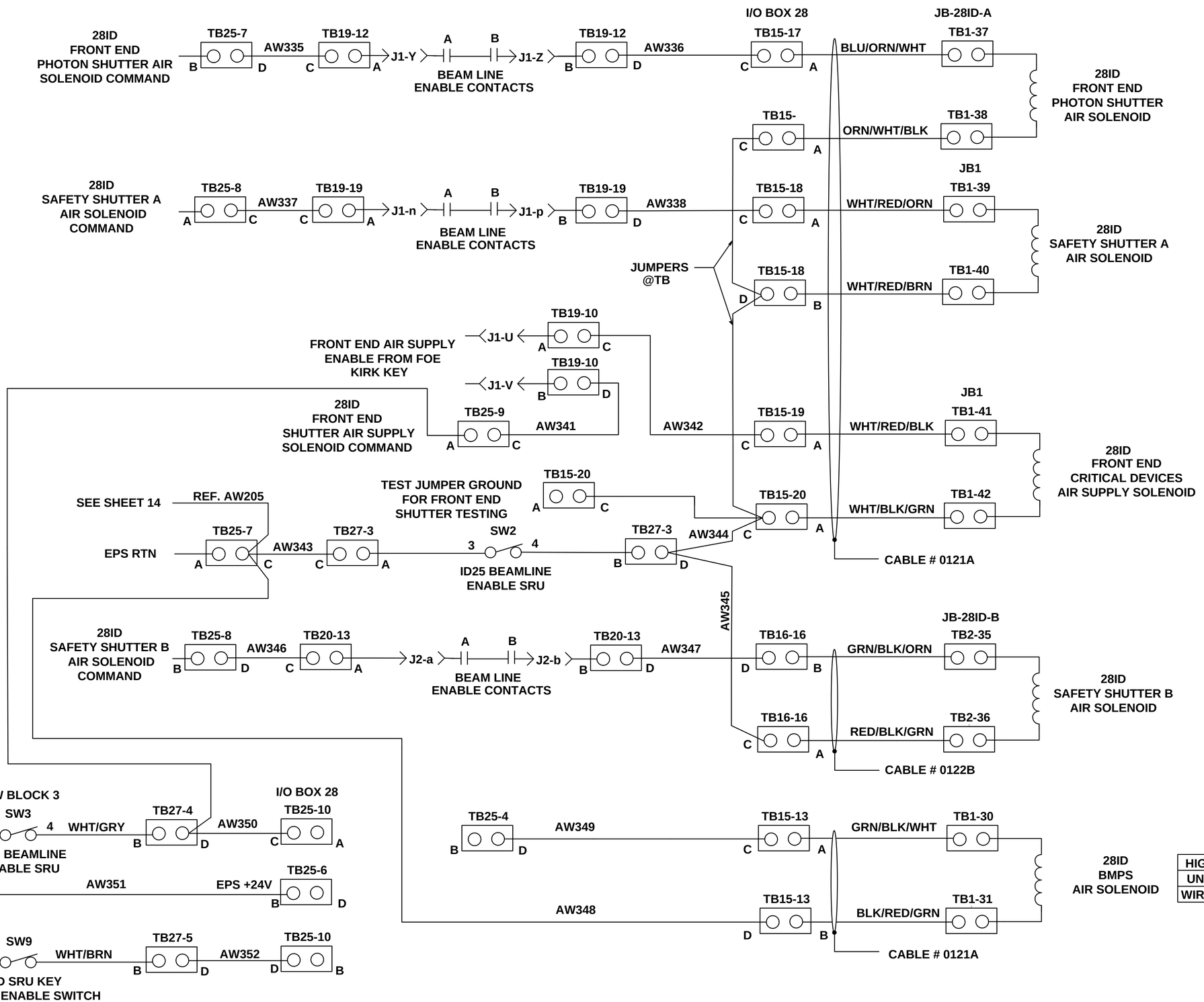

ID BEAMLINE GROUP

A

28ID

HIGHEST WIRE REF DES	AW352
UNUSED WIRE REF DES	———
WIRE REF DES NOT USED	———

LT-EL-SR-EI-PPS-0228-90

LT-EL-SR-EI (DRAWING DIRECTORY)	LT-EL-SR-EI-PPS-0228-90 (DRAWING NUMBER)	K (REV)
COMPUTER REPRODUCIBLE	SCALE: N/A	SHEET 17 OF 63

REV	DESCRIPTION	BY	DATE	CHK	APP
	SEE SHEET 1				

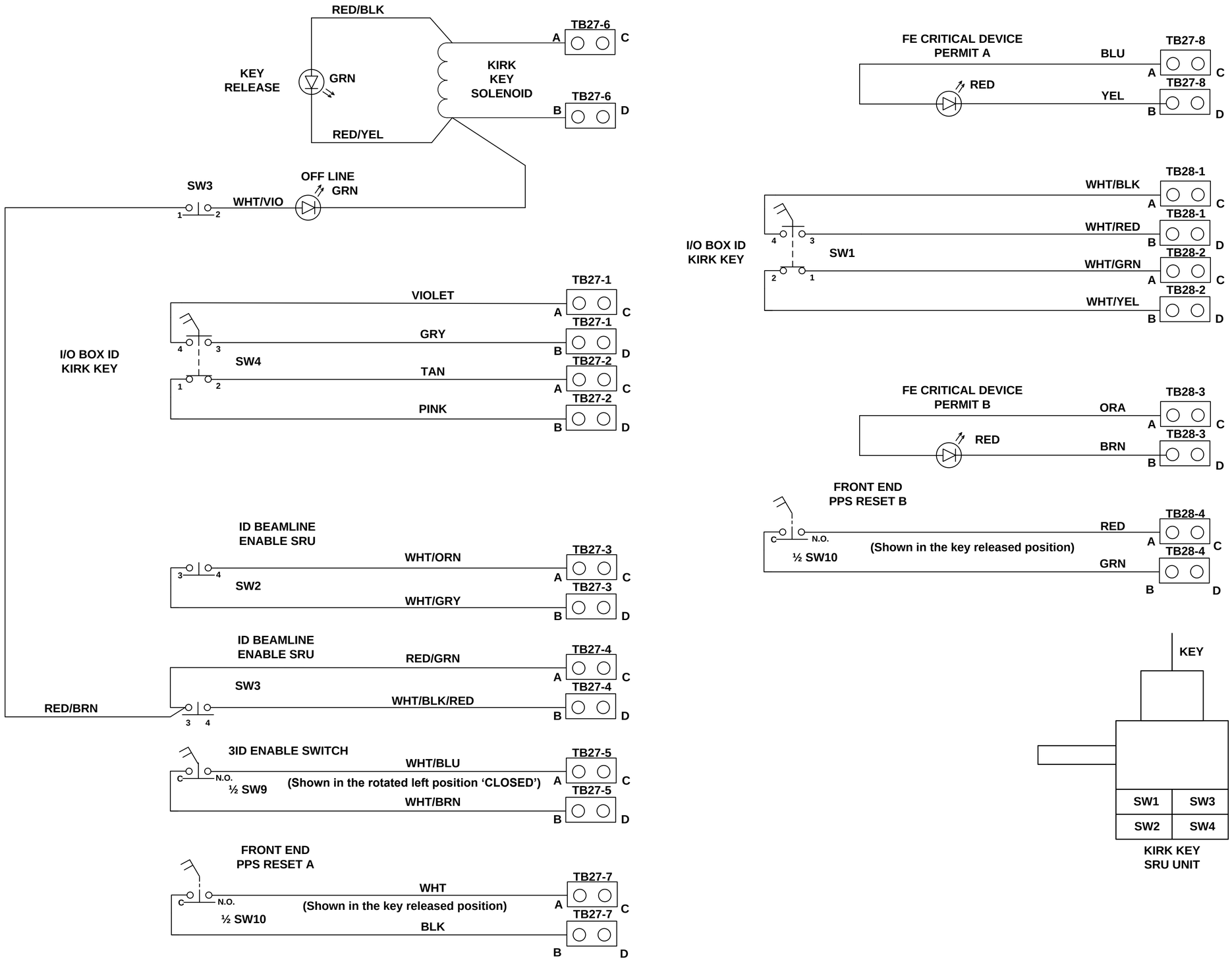

BEAMLINE ENABLE PANEL

LT-EL-SR-EI-PPS-0228-90

LT-EL-SR-EI (DRAWING DIRECTORY)	LT-EL-SR-EI-PPS-0228-90 (DRAWING NUMBER)	K (REV)
COMPUTER REPRODUCIBLE	SCALE: N/A	SHEET 18 OF 63

REV	DESCRIPTION	BY	DATE	CHK	APP
	SEE SHEET 1				

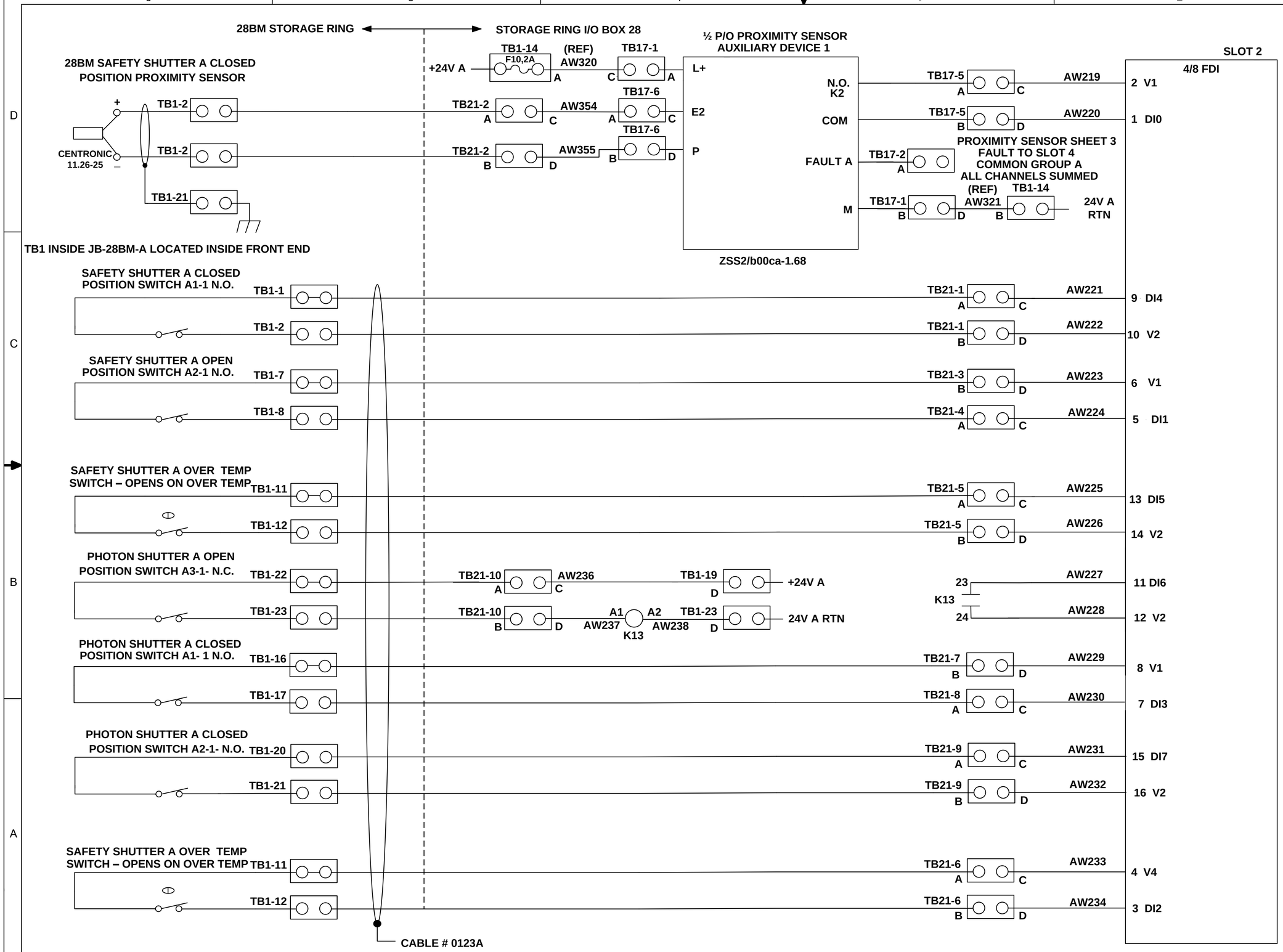

BM BEAMLINE GROUP

A

28BM

HIGHEST WIRE REF DES	AW355
UNUSED WIRE REF DES	———
WIRE REF DES NOT USED	———

LT-EL-SR-EI-PPS-0228-90

LT-EL-SR-EI (DRAWING DIRECTORY)	LT-EL-SR-EI-PPS-0228-90 (DRAWING NUMBER)	K (REV)
COMPUTER REPRODUCIBLE	SCALE: N/A	SHEET 19 OF 63

REV	DESCRIPTION	BY	DATE	CHK	APP
	SEE SHEET 1				

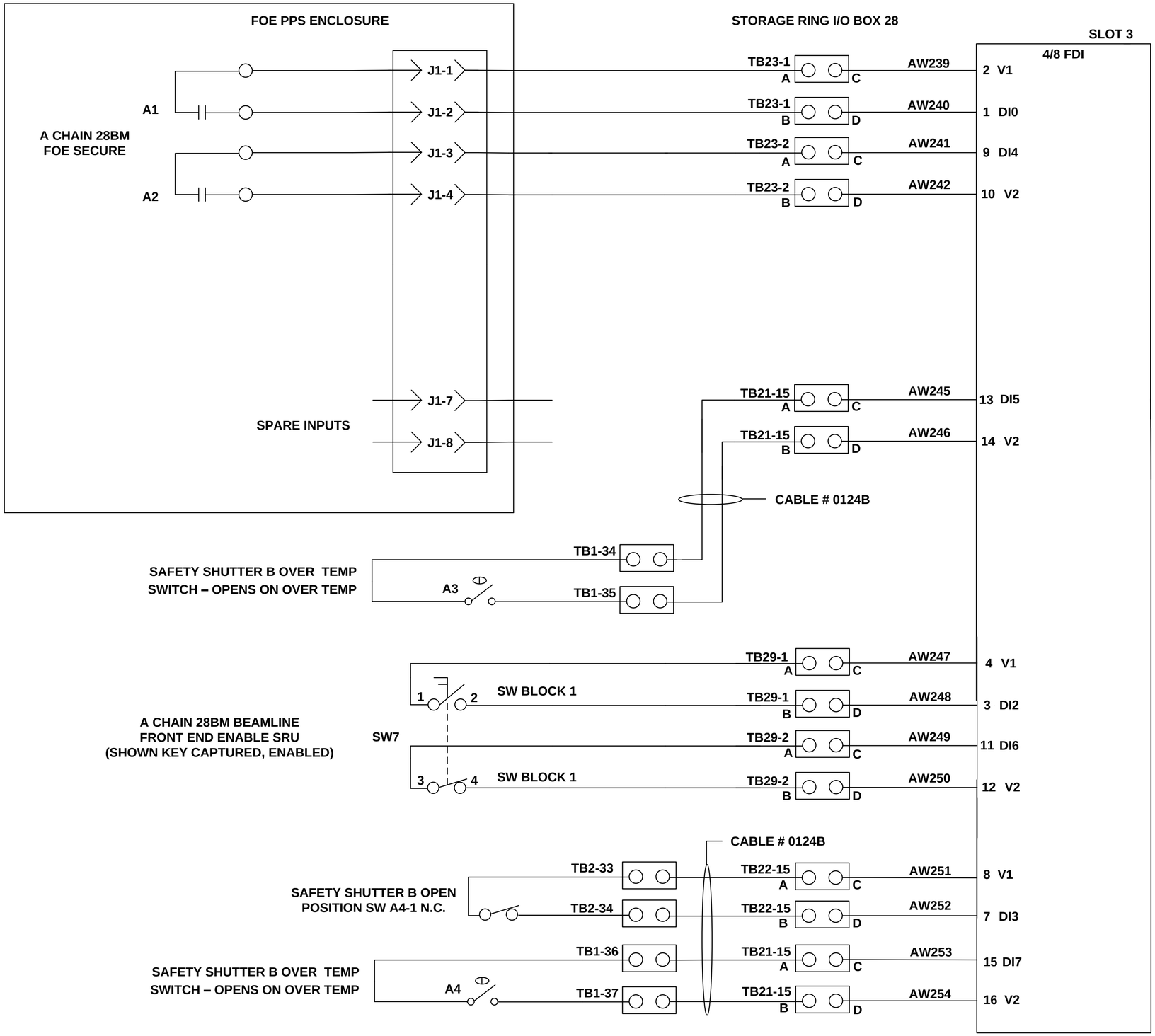

BM BEAMLINE GROUP

A

28BM

HIGHEST WIRE REF DES	AW254
UNUSED WIRE REF DES	AW255-AW258
WIRE REF DES NOT USED	————

LT-EL-SR-EI-PPS-0228-90

LT-EL-SR-EI (DRAWING DIRECTORY)	LT-EL-SR-EI-PPS-0228-90 (DRAWING NUMBER)	K (REV)
COMPUTER REPRODUCIBLE	SCALE: N/A	SHEET 20 OF 63

REV	DESCRIPTION	BY	DATE	CHK	APP
	SEE SHEET 1				

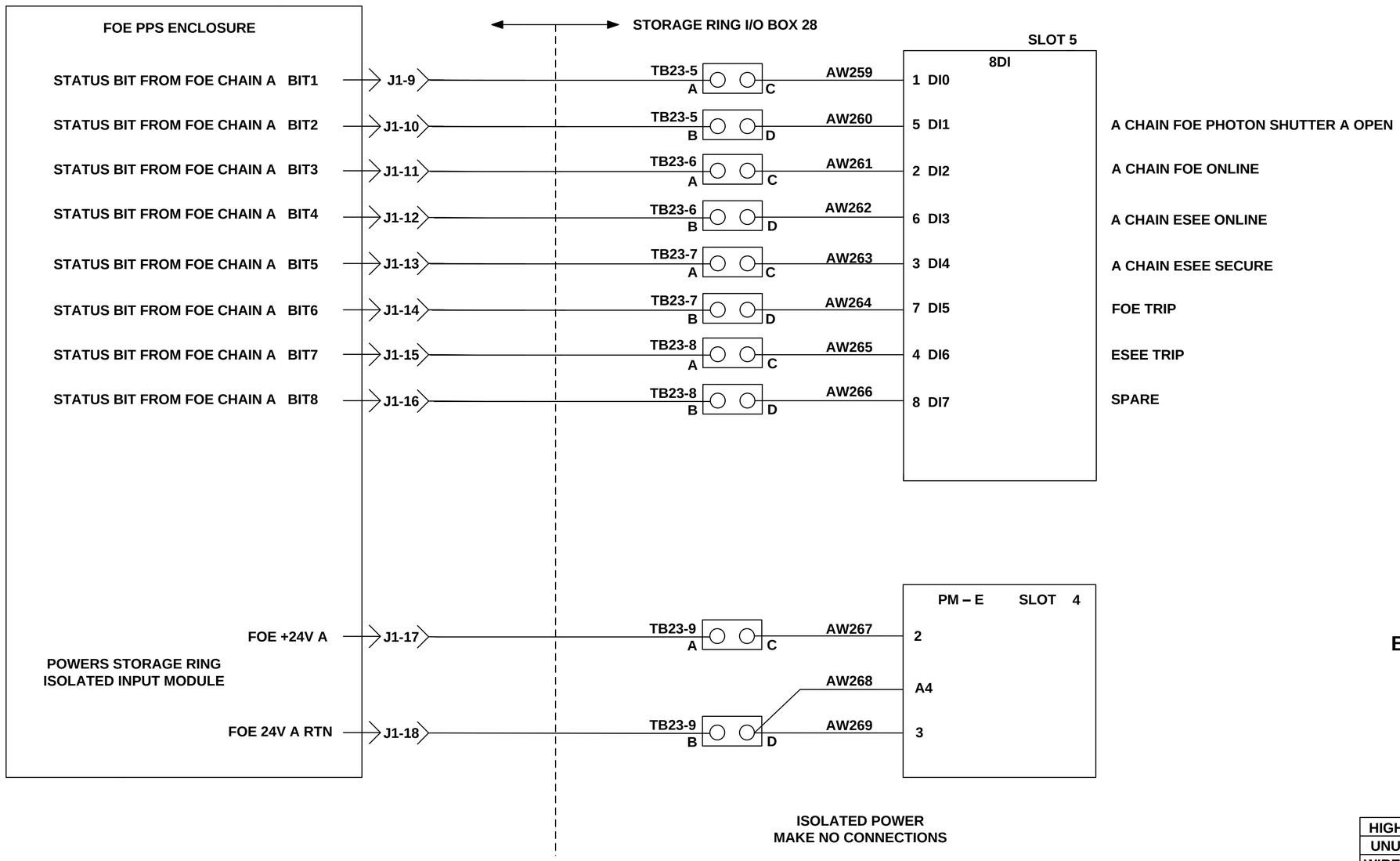

BM BEAMLINE GROUP

A

28BM

HIGHEST WIRE REF DES	AW269
UNUSED WIRE REF DES	AW270-AW273
WIRE REF DES NOT USED	————

LT-EL-SR-EI-PPS-0228-90

LT-EL-SR-EI DRAWING DIRECTORY	LT-EL-SR-EI-PPS-0228-90 DRAWING NUMBER	K REV
COMPUTER REPRODUCIBLE	SCALE: N/A	SHEET 21 OF 63

REV	DESCRIPTION	BY	DATE	CHK	APP
	SEE SHEET 1				

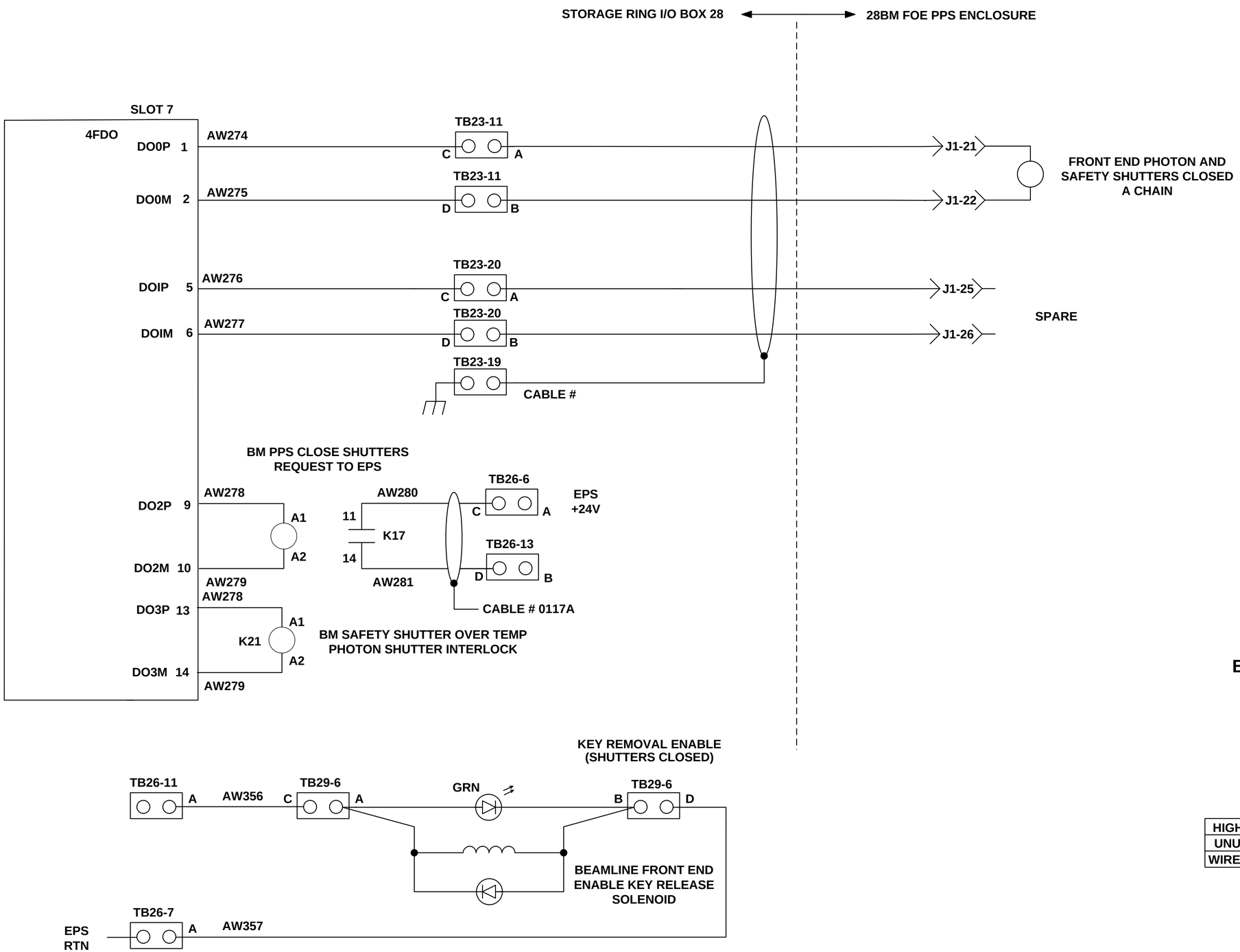

BM BEAMLINE GROUP

A

28BM

LT-EL-SR-EI-PPS-0228-90

HIGHEST WIRE REF DES	AW357
UNUSED WIRE REF DES	———
WIRE REF DES NOT USED	———

LT-EL-SR-EI (DRAWING DIRECTORY)	LT-EL-SR-EI-PPS-0228-90 (DRAWING NUMBER)	K (REV)
COMPUTER REPRODUCIBLE	SCALE: N/A	SHEET 22 OF 63

REV	DESCRIPTION	BY	DATE	CHK	APP
	SEE SHEET 1				

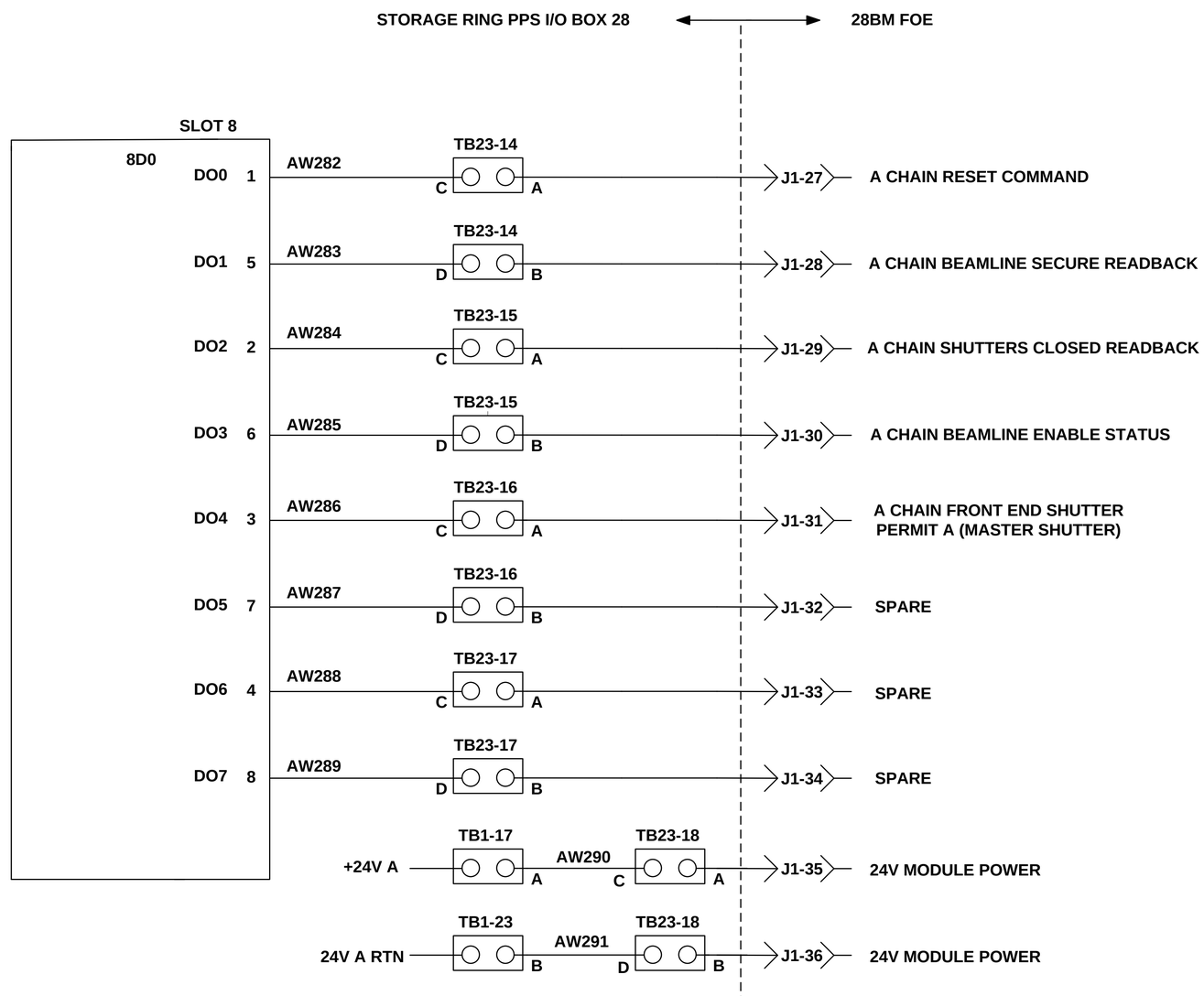

BM BEAMLINE GROUP

A

28BM

HIGHEST WIRE REF DES	AW291
UNUSED WIRE REF DES	AW292-AW293
WIRE REF DES NOT USED	————

LT-EL-SR-EI-PPS-0228-90

LT-EL-SR-EI DRAWING DIRECTORY	LT-EL-SR-EI-PPS-0228-90 DRAWING NUMBER	K REV
COMPUTER REPRODUCIBLE	SCALE: N/A	SHEET 23 OF 63

REV	DESCRIPTION	BY	DATE	CHK	APP
	SEE SHEET 1				

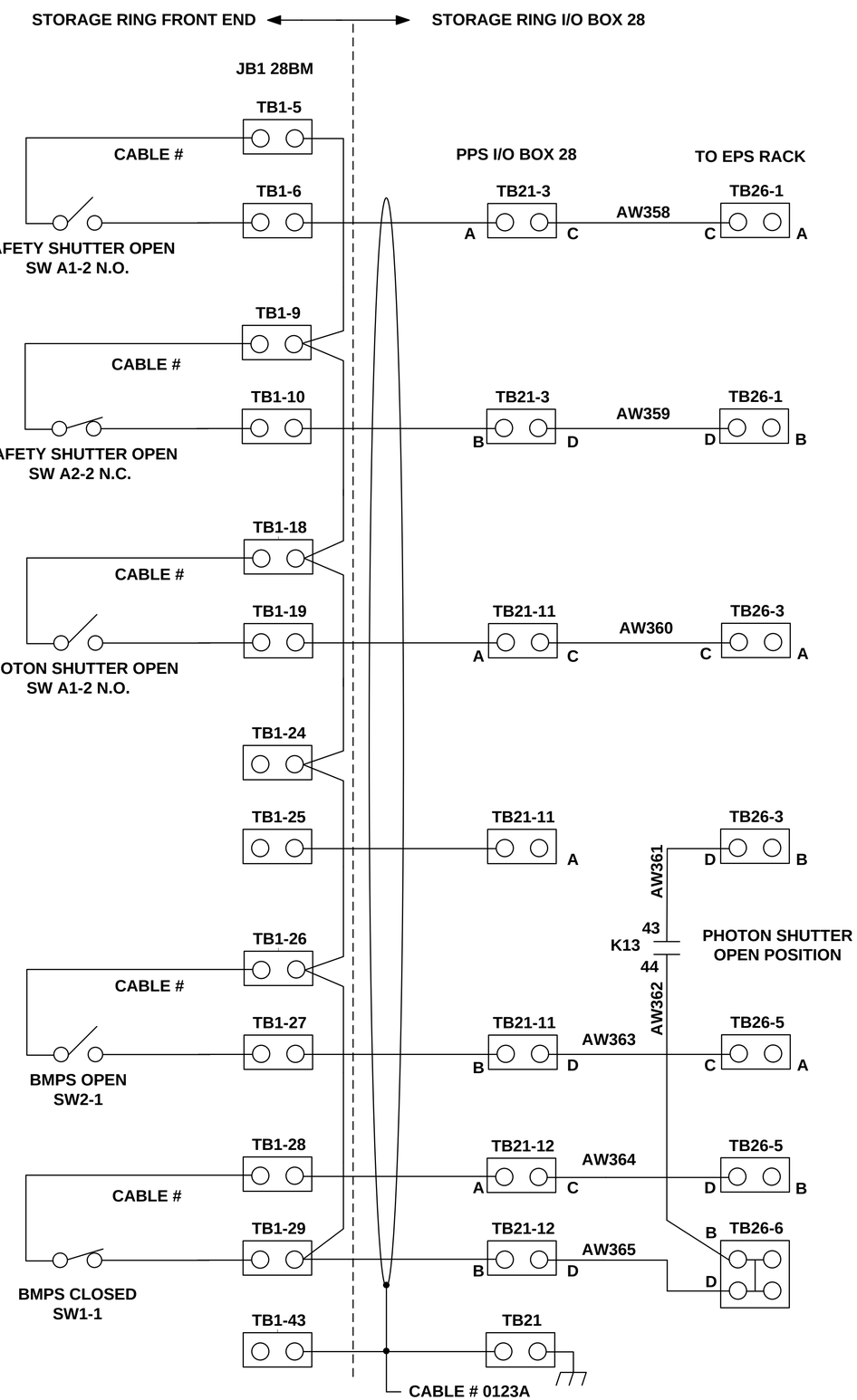

BM BEAMLINE GROUP

A

28BM

HIGHEST WIRE REF DES	AW365
UNUSED WIRE REF DES	———
WIRE REF DES NOT USED	———

LT-EL-SR-EI-PPS-0228-90

LT-EL-SR-EI (DRAWING DIRECTORY)	LT-EL-SR-EI-PPS-0228-90 (DRAWING NUMBER)	K (REV)
COMPUTER REPRODUCIBLE	SCALE: N/A	SHEET 24 OF 63

REV	DESCRIPTION	BY	DATE	CHK	APP
	SEE SHEET 1				

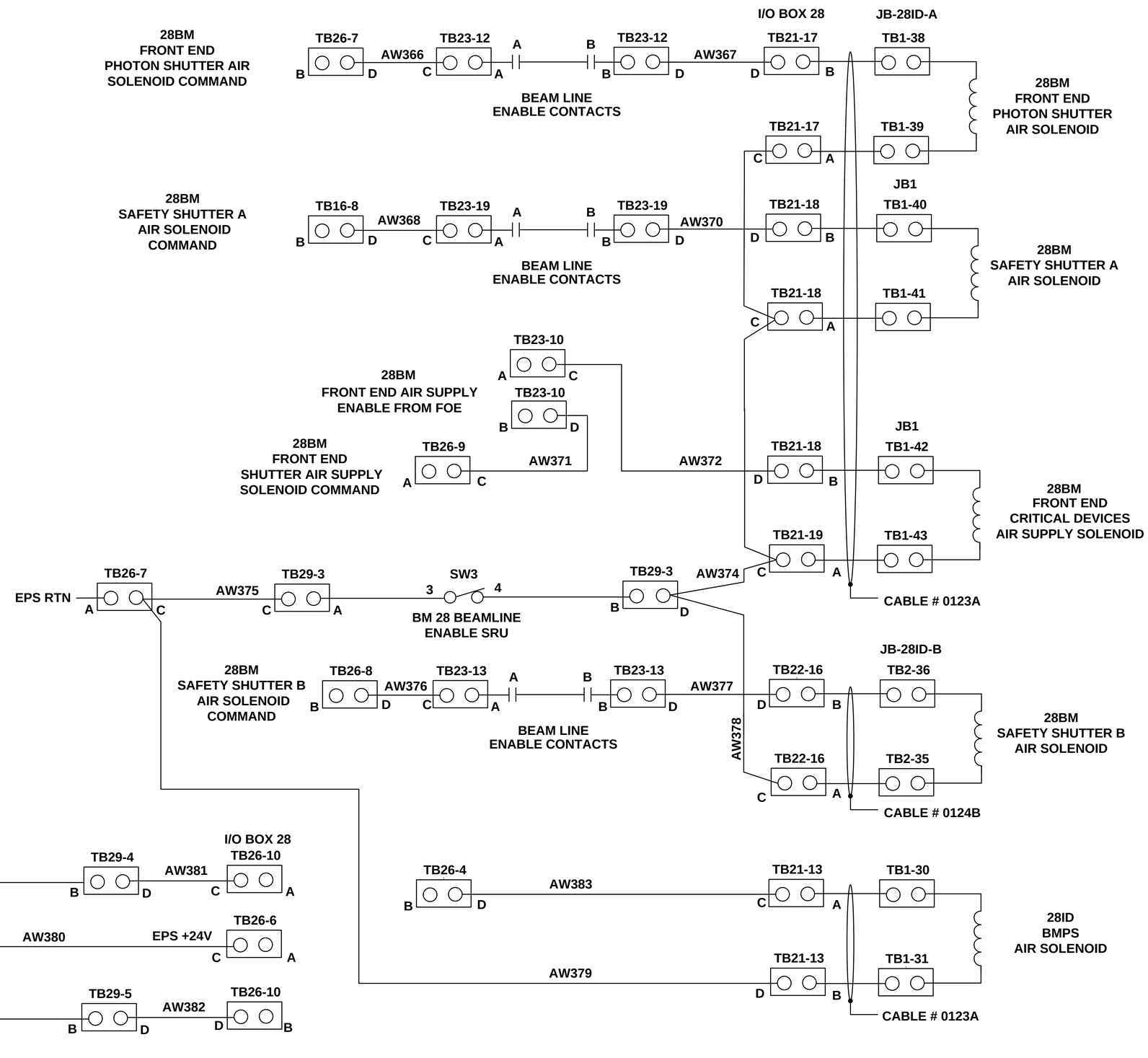

BM BEAMLINE GROUP

A

28BM

HIGHEST WIRE REF DES	AW383
UNUSED WIRE REF DES	———
WIRE REF DES NOT USED	———

LT-EL-SR-EI-PPS-0228-90

LT-EL-SR-EI (DRAWING DIRECTORY)	LT-EL-SR-EI-PPS-0228-90 (DRAWING NUMBER)	K (REV)
COMPUTER REPRODUCIBLE	SCALE: N/A	SHEET 25 OF 63

REV	DESCRIPTION	BY	DATE	CHK	APP
	SEE SHEET 1				

LT-EL-SR-EI-PPS-0228-90

SHEET LEFT BLANK
FOR FUTURE DATA

LT-EL-SR-EI	LT-EL-SR-EI-PPS-0228-90	K
DRAWING DIRECTORY	DRAWING NUMBER	REV
COMPUTER REPRODUCIBLE	SCALE: N/A	SHEET 26 OF 63

REV	DESCRIPTION	BY	DATE	CHK	APP
	SEE SHEET 1				

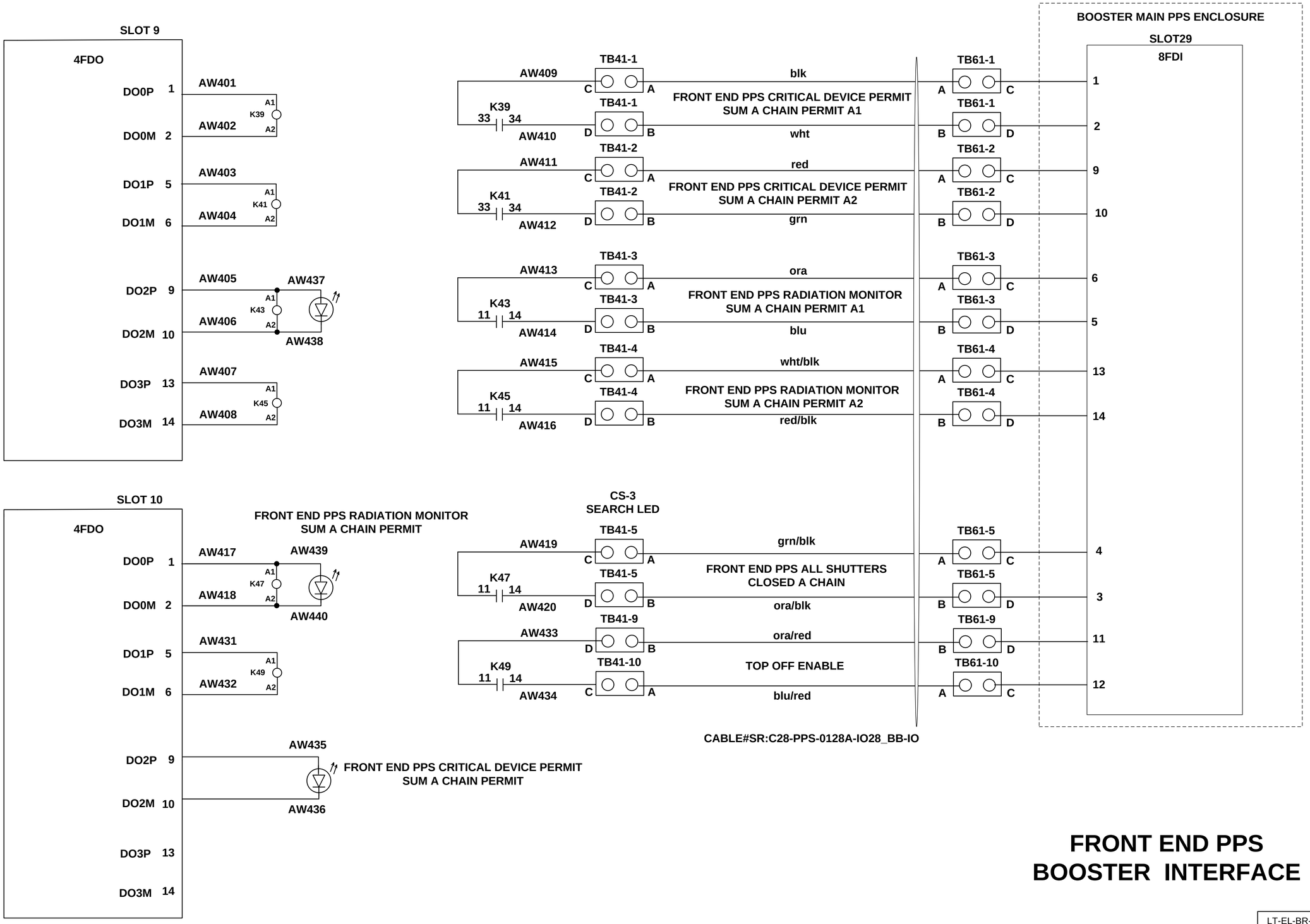

FRONT END PPS BOOSTER INTERFACE

A

LT-EL-SR-EI-PPS-0228-90

LT-EL-BR-EI (DRAWING DIRECTORY)	LT-EL-SR-EI-PPS-0228-90 (DRAWING NUMBER)	K (REV)
COMPUTER REPRODUCIBLE	SCALE: N/A	SHEET 27 OF 63

REV	DESCRIPTION	BY	DATE	CHK	APP
	SEE SHEET 1				

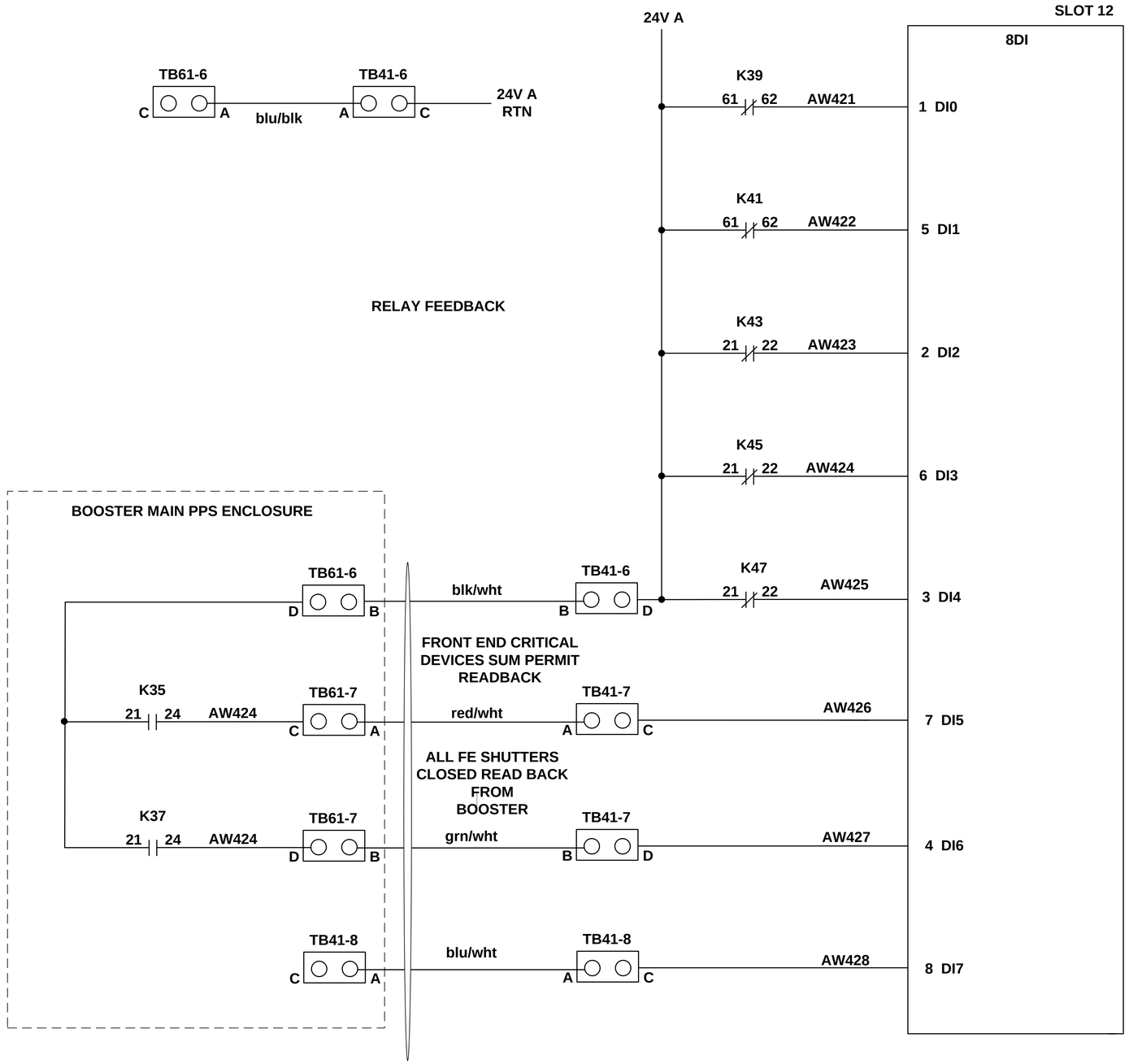

FRONT END PPS BOOSTER INTERFACE

A

LT-EL-SR-EI-PPS-0228-90

LT-EL-BR-EI (DRAWING DIRECTORY)	LT-EL-SR-EI-PPS-0228-90 (DRAWING NUMBER)	K (REV)
COMPUTER REPRODUCIBLE	SCALE: N/A	SHEET 28 OF 63

REV	DESCRIPTION	BY	DATE	CHK	APP
	SEE SHEET 1				

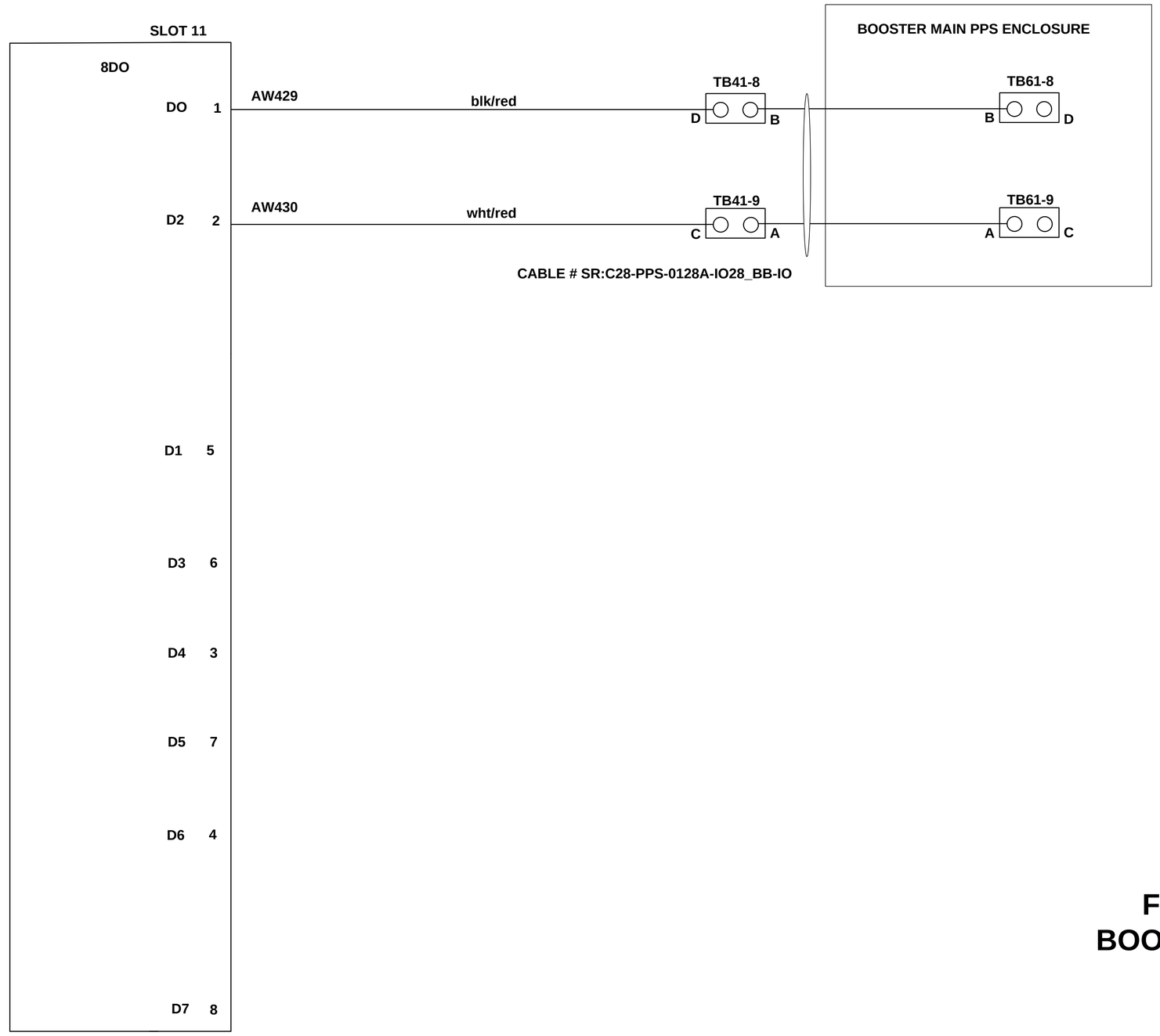

FRONT END PPS BOOSTER INTERFACE

A

LT-EL-SR-EI-PPS-0228-90

LT-EL-BR-EI (DRAWING DIRECTORY)	LT-EL-SR-EI-PPS-0228-90 (DRAWING NUMBER)	K (REV)
COMPUTER REPRODUCIBLE	SCALE: N/A	SHEET 29 OF 63

REV	DESCRIPTION	BY	DATE	CHK	APP
	SEE SHEET 1				

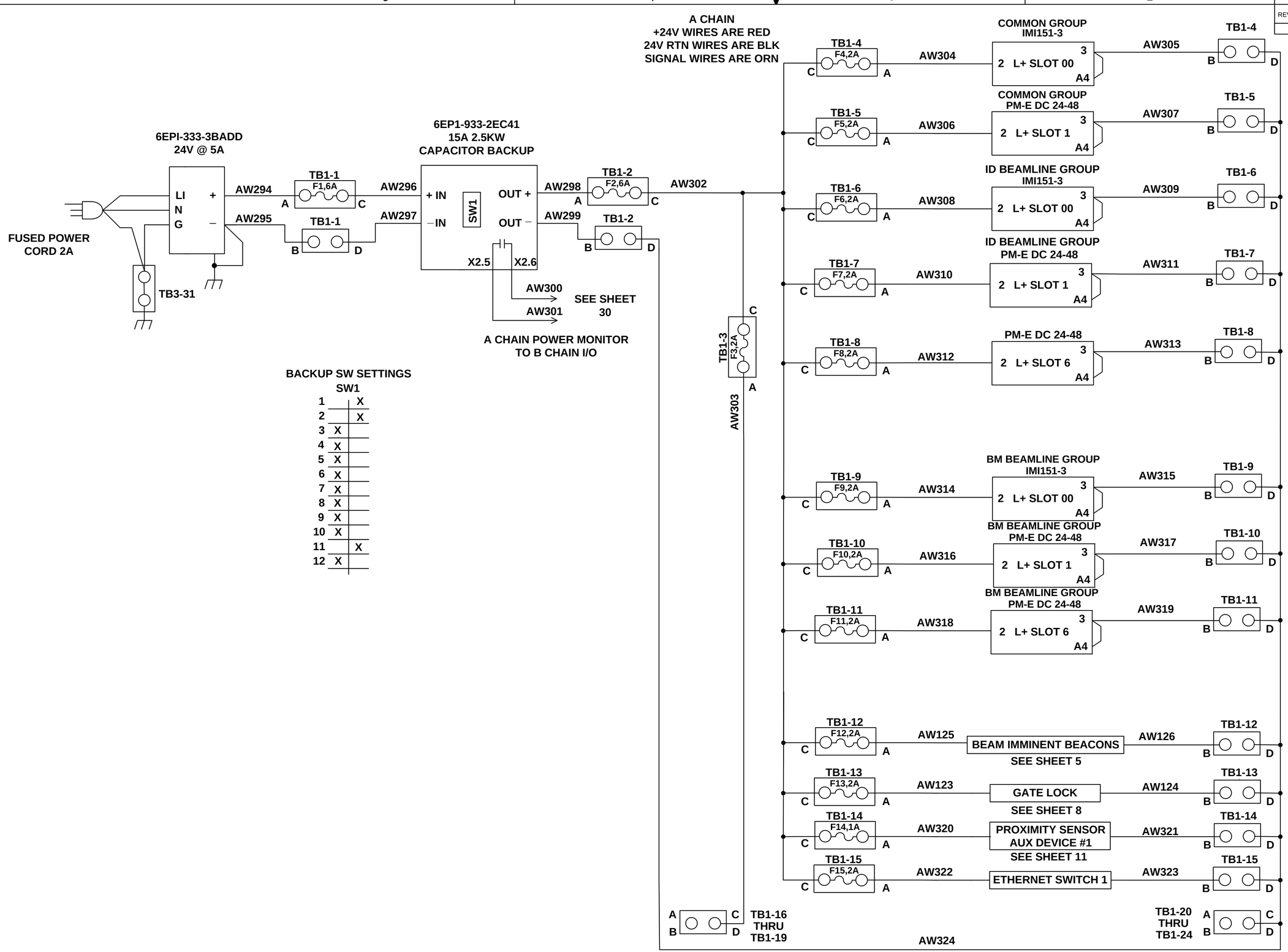

LT-EL-SR-EI-PPS-0228-90

POWER DISRTIBUTION

A

HIGHEST WIRE REF DES IN A CHAIN

AW383

LT-EL-SR-EI	LT-EL-SR-EI-PPS-0228-90	H
DRAWING DIRECTORY	DRAWING NUMBER	REV

COMPUTER REPRODUCIBLE | SCALE: N/A | SHEET 30 OF 63

REV	DESCRIPTION	BY	DATE	CHK	APP
	SEE SHEET 1				

LT-EL-SR-EI-PPS-0228-90

SHEET LEFT BLANK
FOR FUTURE DATA

LT-EL-SR-EI	LT-EL-SR-EI-PPS-0228-90	K
DRAWING DIRECTORY	DRAWING NUMBER	REV
COMPUTER REPRODUCIBLE	SCALE: N/A	SHEET 31 OF 63

REV	DESCRIPTION	BY	DATE	CHK	APP
	SEE SHEET 1				

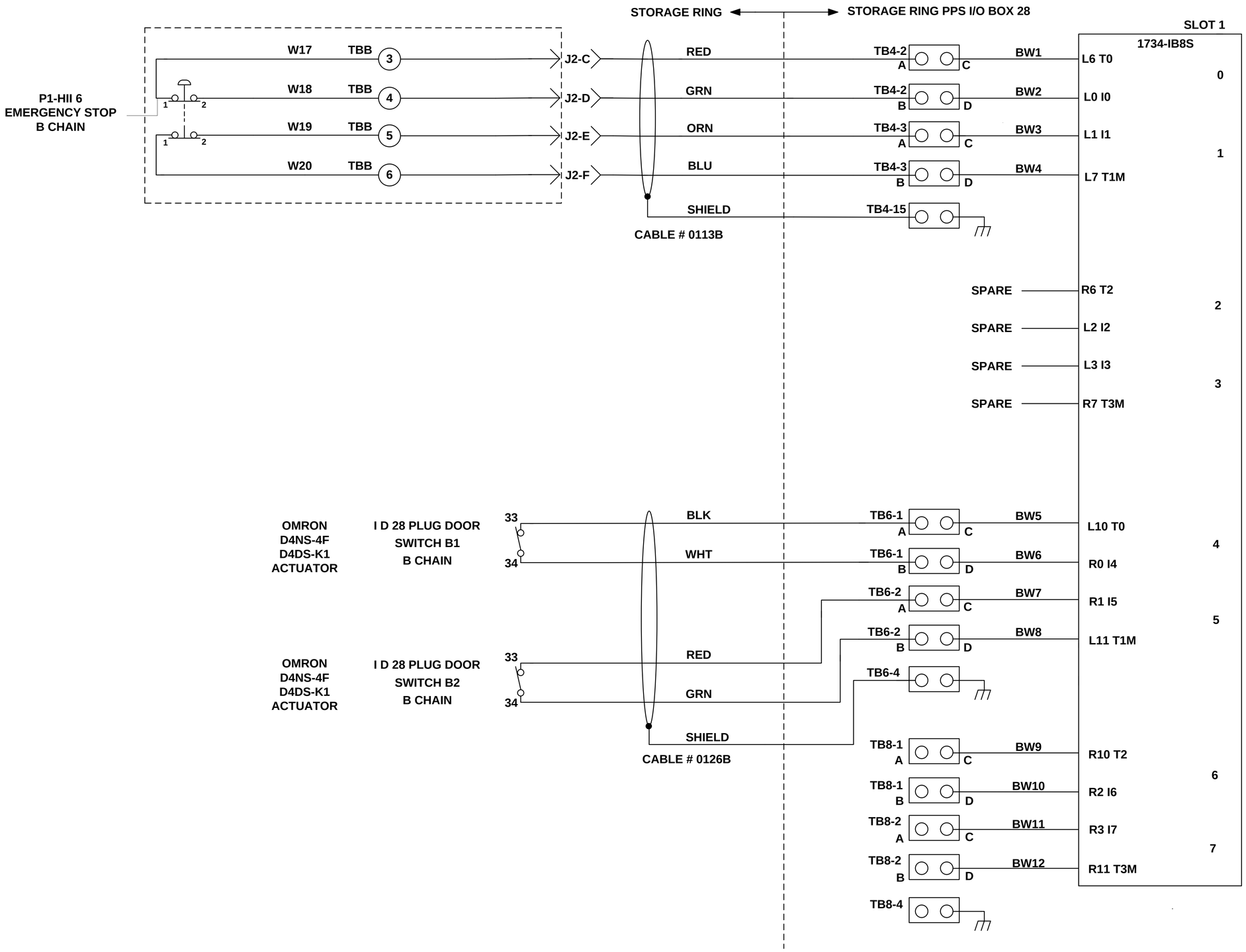

B

COMMON GROUP

HIGHEST WIRE REF DES	BW12
UNUSED WIRE REF DES	BW13-BW16
WIRE REF DES NOT USED	———

LT-EL-SR-EI-PPS-0228-90

LT-EL-SR-EI DRAWING DIRECTORY	LT-EL-SR-EI-PPS-0228-90 DRAWING NUMBER	K REV
COMPUTER REPRODUCIBLE	SCALE: N/A	SHEET 32 OF 63

REV	DESCRIPTION	BY	DATE	CHK	APP
	SEE SHEET 1				

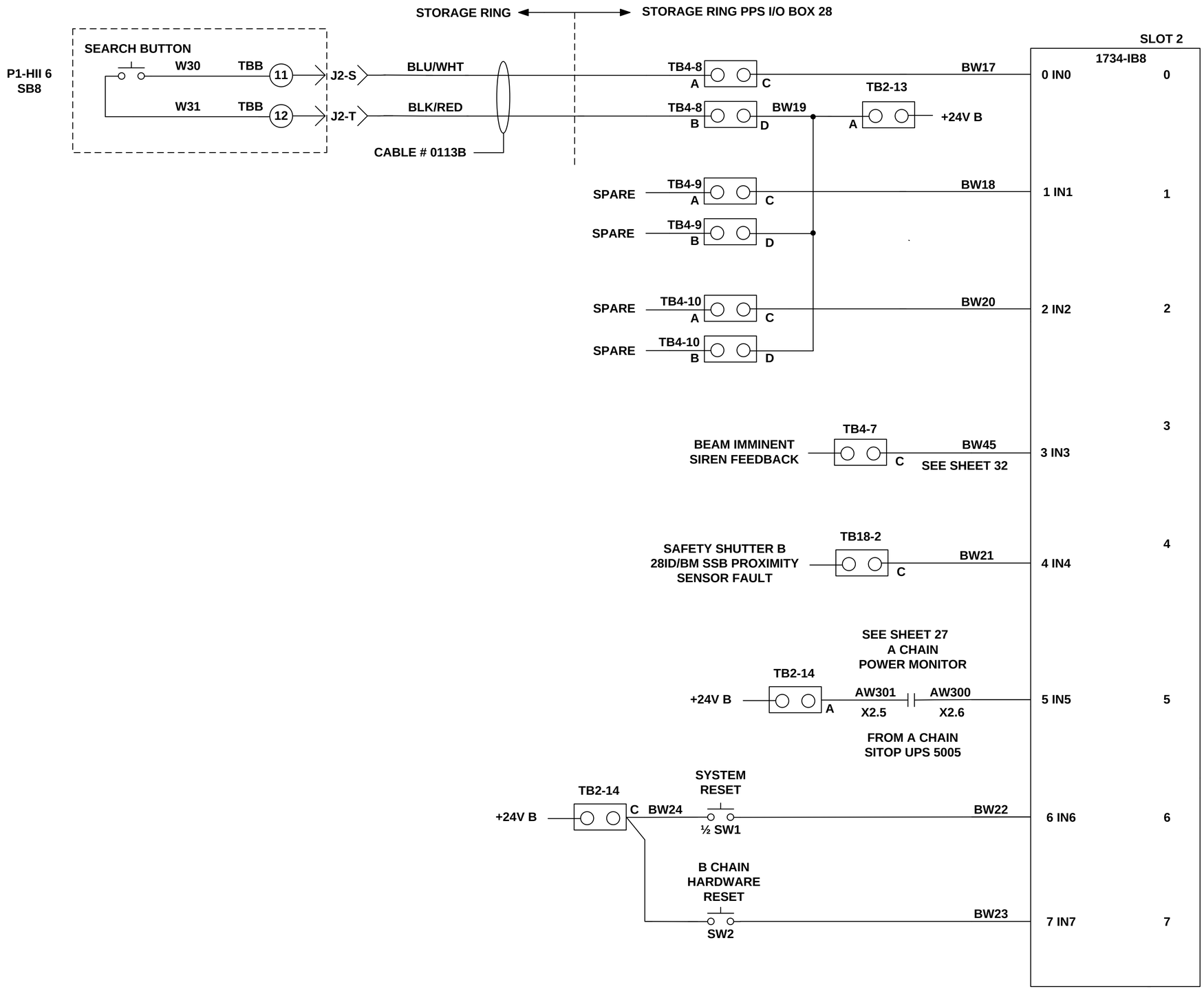

B

COMMON GROUP

HIGHEST WIRE REF DES	BW23
UNUSED WIRE REF DES	———
WIRE REF DES NOT USED	———

LT-EL-SR-EI-PPS-0228-90

LT-EL-SR-EI DRAWING DIRECTORY	LT-EL-SR-EI-PPS-0228-90 DRAWING NUMBER	K REV
COMPUTER REPRODUCIBLE	SCALE: N/A	SHEET 33 OF 63

REV	DESCRIPTION	BY	DATE	CHK	APP
	SEE SHEET 1				

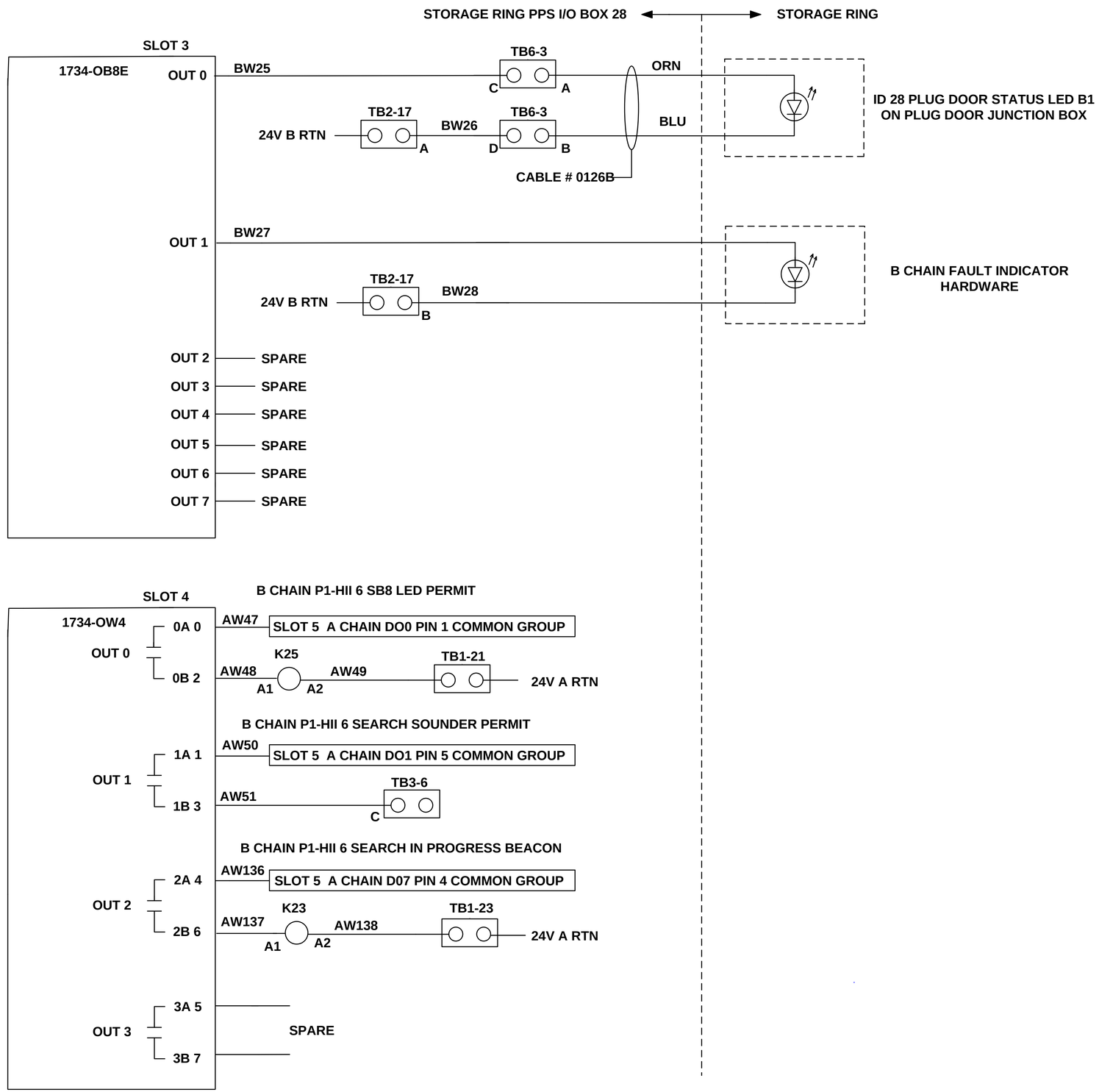

B

COMMON GROUP

HIGHEST WIRE REF DES	BW30
UNUSED WIRE REF DES	BW31-BW37
WIRE REF DES NOT USED	———

LT-EL-SR-EI-PPS-0228-90

LT-EL-SR-EI DRAWING DIRECTORY	LT-EL-SR-EI-PPS-0228-90 DRAWING NUMBER	K REV
COMPUTER REPRODUCIBLE	SCALE: N/A	SHEET 34 OF 63

REV	DESCRIPTION	BY	DATE	CHK	APP
	SEE SHEET 1				

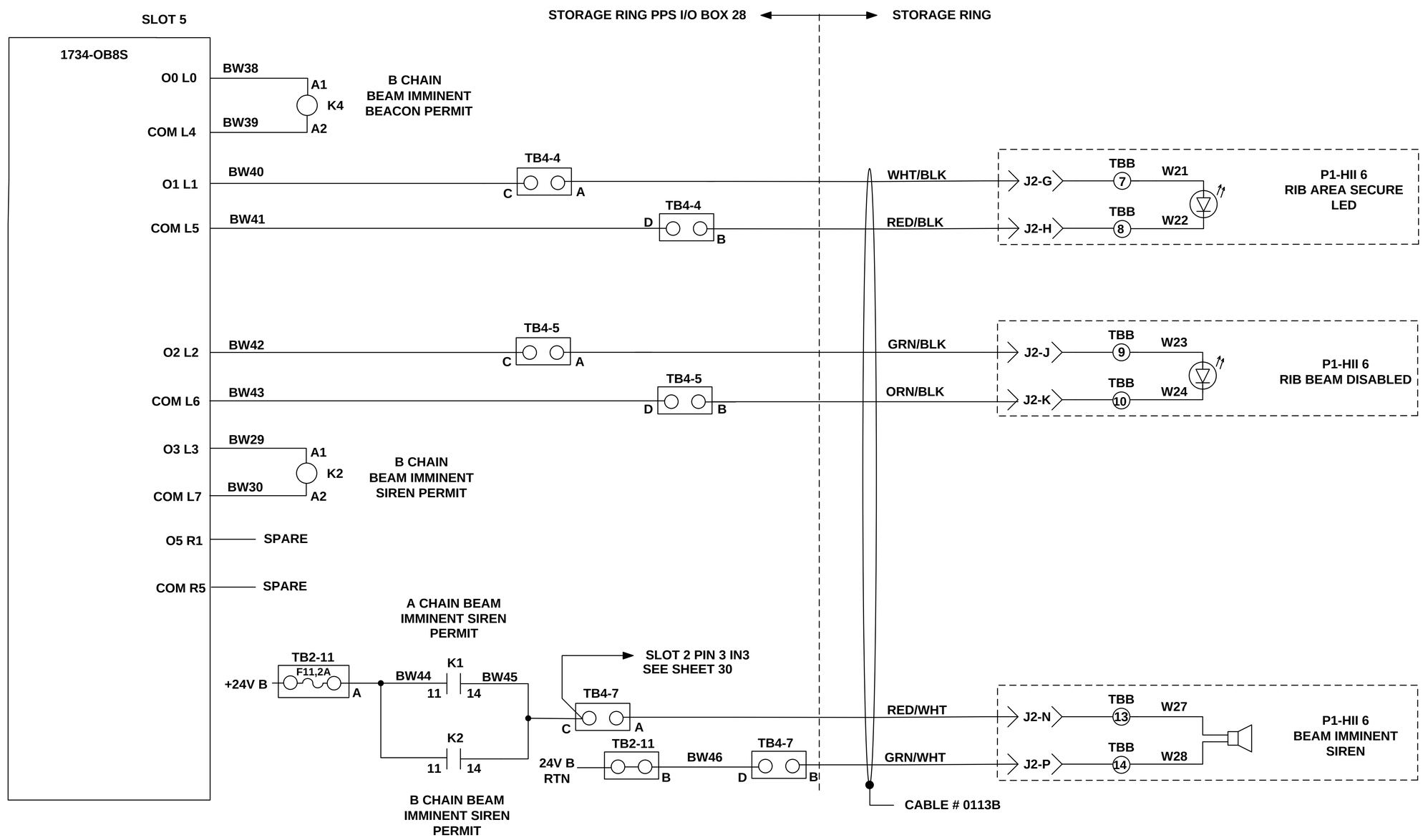

B

COMMON GROUP

HIGHEST WIRE REF DES	BW46
UNUSED WIRE REF DES	BW47-BW49
WIRE REF DES NOT USED	———

LT-EL-SR-EI-PPS-0228-90

LT-EL-SR-EI (DRAWING DIRECTORY)	LT-EL-SR-EI-PPS-0228-90 (DRAWING NUMBER)	K (REV)
COMPUTER REPRODUCIBLE	SCALE: N/A	SHEET 35 OF 63

REV	DESCRIPTION	BY	DATE	CHK	APP
	SEE SHEET 1				

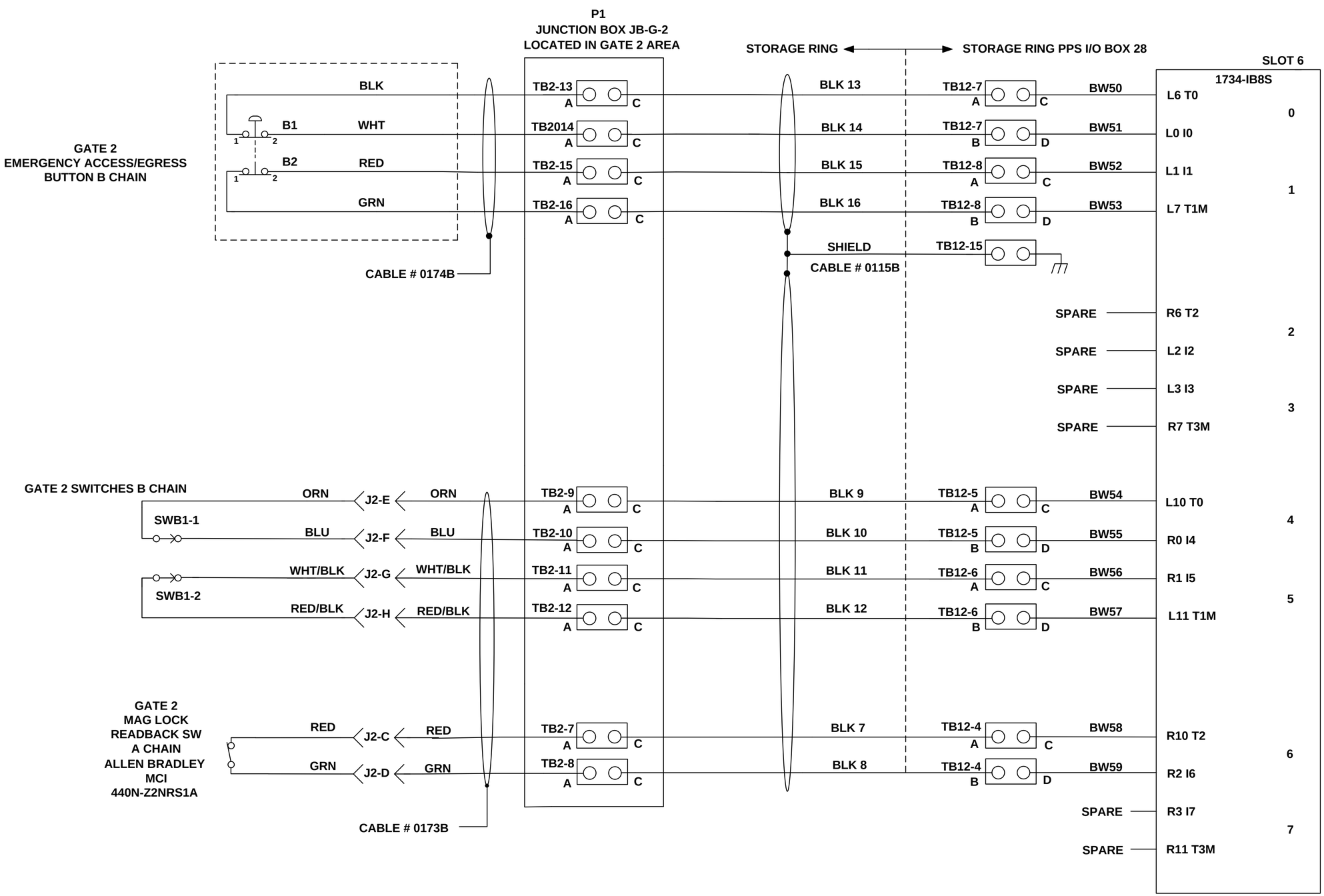

B

GATE / LABYRINTH / GROUP

GATE 2

HIGHEST WIRE REF DES	BW59
UNUSED WIRE REF DES	BW60-BW63
WIRE REF DES NOT USED	———

LT-EL-SR-EI-PPS-0228-90

LT-EL-SR-EI DRAWING DIRECTORY	LT-EL-SR-EI-PPS-0228-90 DRAWING NUMBER	K REV
COMPUTER REPRODUCIBLE	SCALE: N/A	SHEET 36 OF 63

REV	DESCRIPTION	BY	DATE	CHK	APP
	SEE SHEET 1				

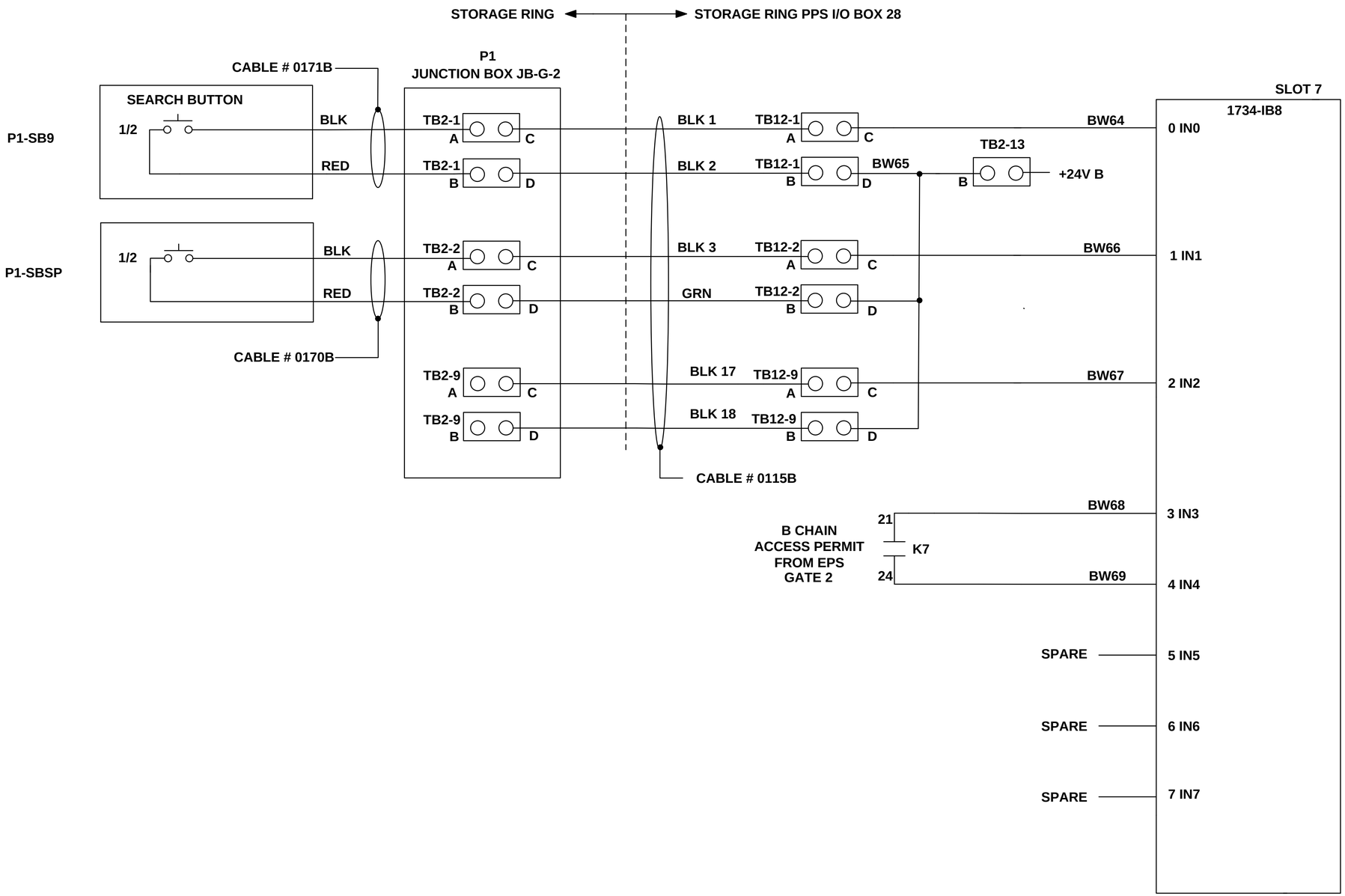

B

GATE / LABYRINTH / GROUP

GATE 2

HIGHEST WIRE REF DES	BW69
UNUSED WIRE REF DES	BW70-BW73
WIRE REF DES NOT USED	————

LT-EL-SR-EI-PPS-0228-90

LT-EL-SR-EI DRAWING DIRECTORY	LT-EL-SR-EI-PPS-0228-90 DRAWING NUMBER	K REV
COMPUTER REPRODUCIBLE	SCALE: N/A	SHEET 37 OF 63

REV	DESCRIPTION	BY	DATE	CHK	APP
	SEE SHEET 1				

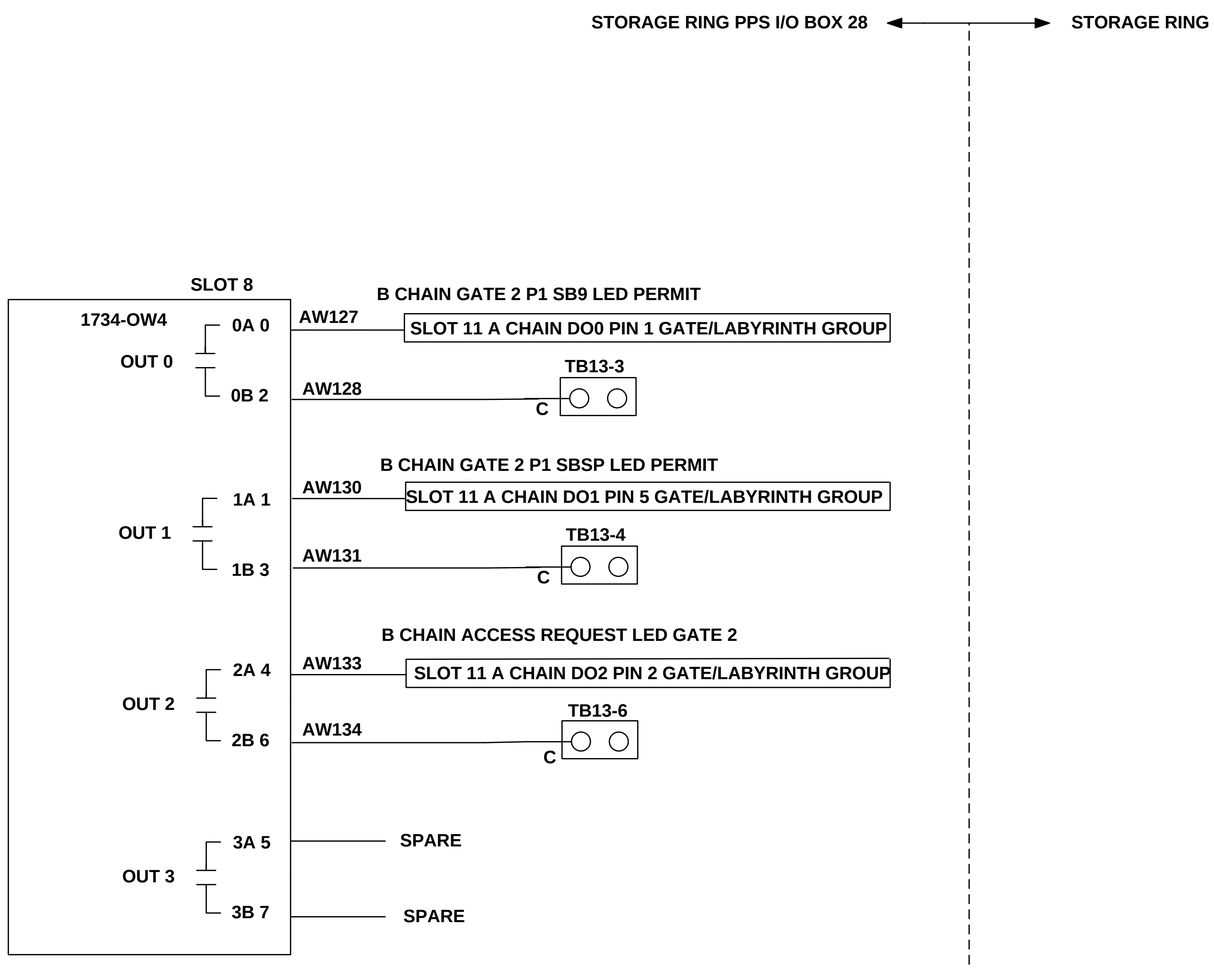

B

GATE / LABYRINTH / GROUP

GATE 2

HIGHEST WIRE REF DES	AW134
UNUSED WIRE REF DES	———
WIRE REF DES NOT USED	———

LT-EL-SR-EI-PPS-0228-90

LT-EL-SR-EI DRAWING DIRECTORY	LT-EL-SR-EI-PPS-0228-90 DRAWING NUMBER	K REV
COMPUTER REPRODUCIBLE	SCALE: N/A	SHEET 38 OF 63

REV	DESCRIPTION	BY	DATE	CHK	APP
	SEE SHEET 1				

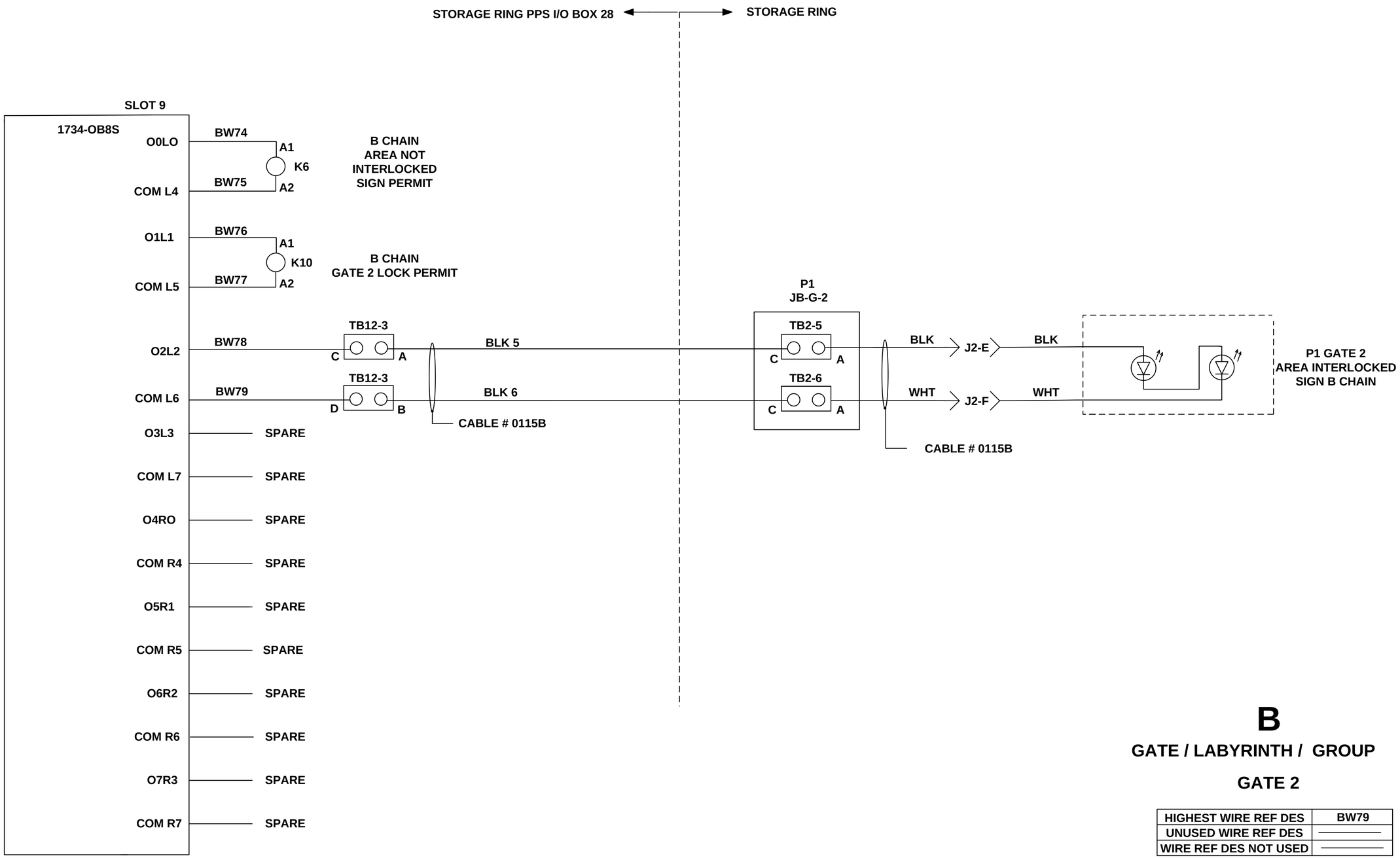

B

GATE / LABYRINTH / GROUP

GATE 2

HIGHEST WIRE REF DES	BW79
UNUSED WIRE REF DES	———
WIRE REF DES NOT USED	———

LT-EL-SR-EI-PPS-0228-90

LT-EL-SR-EI (DRAWING DIRECTORY)	LT-EL-SR-EI-PPS-0228-90 (DRAWING NUMBER)	K (REV)
COMPUTER REPRODUCIBLE	SCALE: N/A	SHEET 39 OF 63

REV	DESCRIPTION	BY	DATE	CHK	APP
	SEE SHEET 1				

LT-EL-SR-EI-PPS-0228-90

SHEET LEFT BLANK
FOR FUTURE DATA

LT-EL-SR-EI	LT-EL-SR-EI-PPS-0228-90	K
DRAWING DIRECTORY	DRAWING NUMBER	REV
COMPUTER REPRODUCIBLE	SCALE: N/A	SHEET 40 OF 63

REV	DESCRIPTION	BY	DATE	CHK	APP
	SEE SHEET 1				

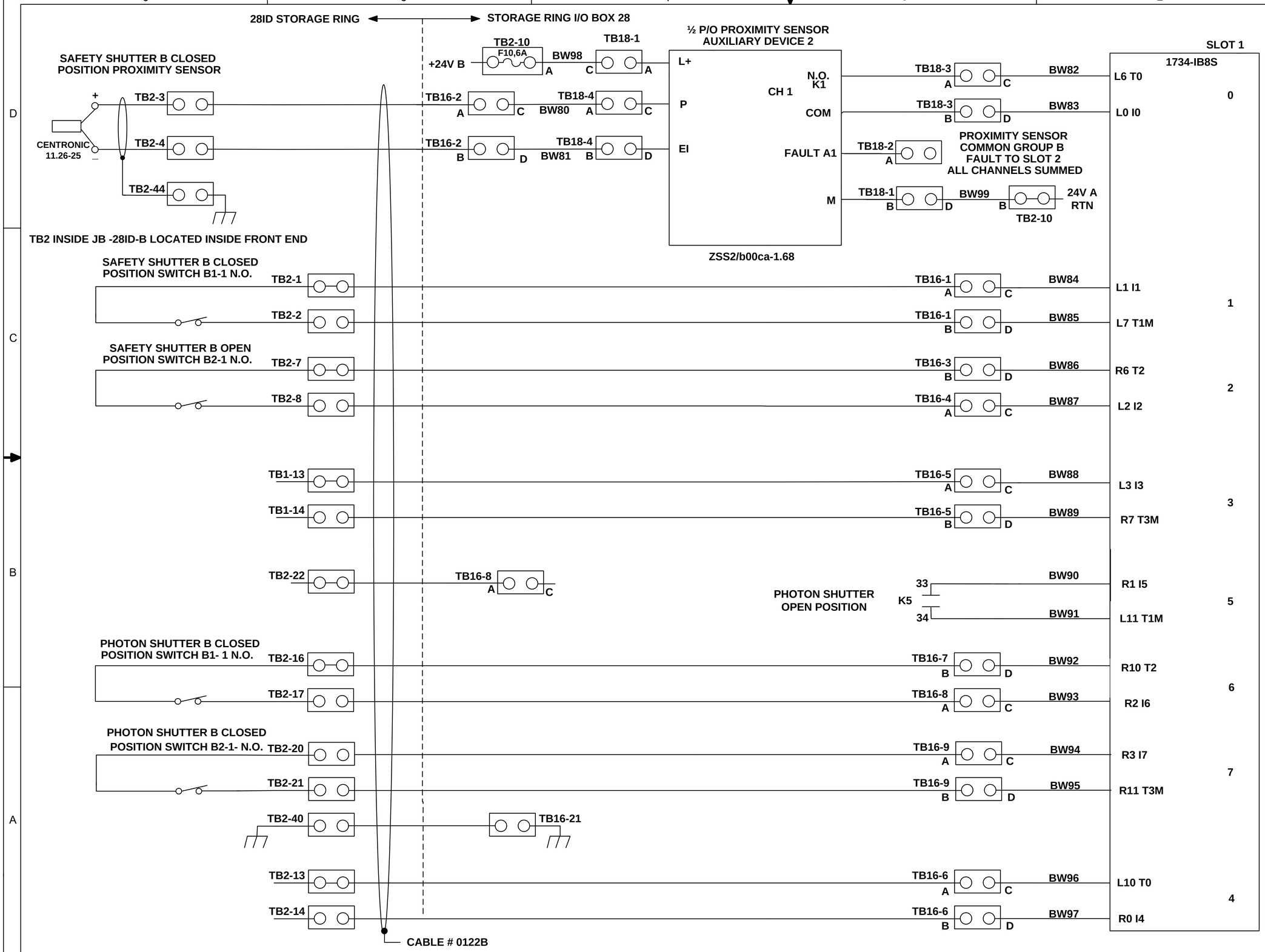

B

ID BEAMLINE GROUP

28ID

HIGHEST WIRE REF DES	BW99
UNUSED WIRE REF DES	BW100-BW101
WIRE REF DES NOT USED	———

LT-EL-SR-EI-PPS-0228-90

LT-EL-SR-EI (DRAWING DIRECTORY)	LT-EL-SR-EI-PPS-0228-90 (DRAWING NUMBER)	K (REV)
COMPUTER REPRODUCIBLE	SCALE: N/A	SHEET 41 OF 63

REV	DESCRIPTION	BY	DATE	CHK	APP
	SEE SHEET 1				

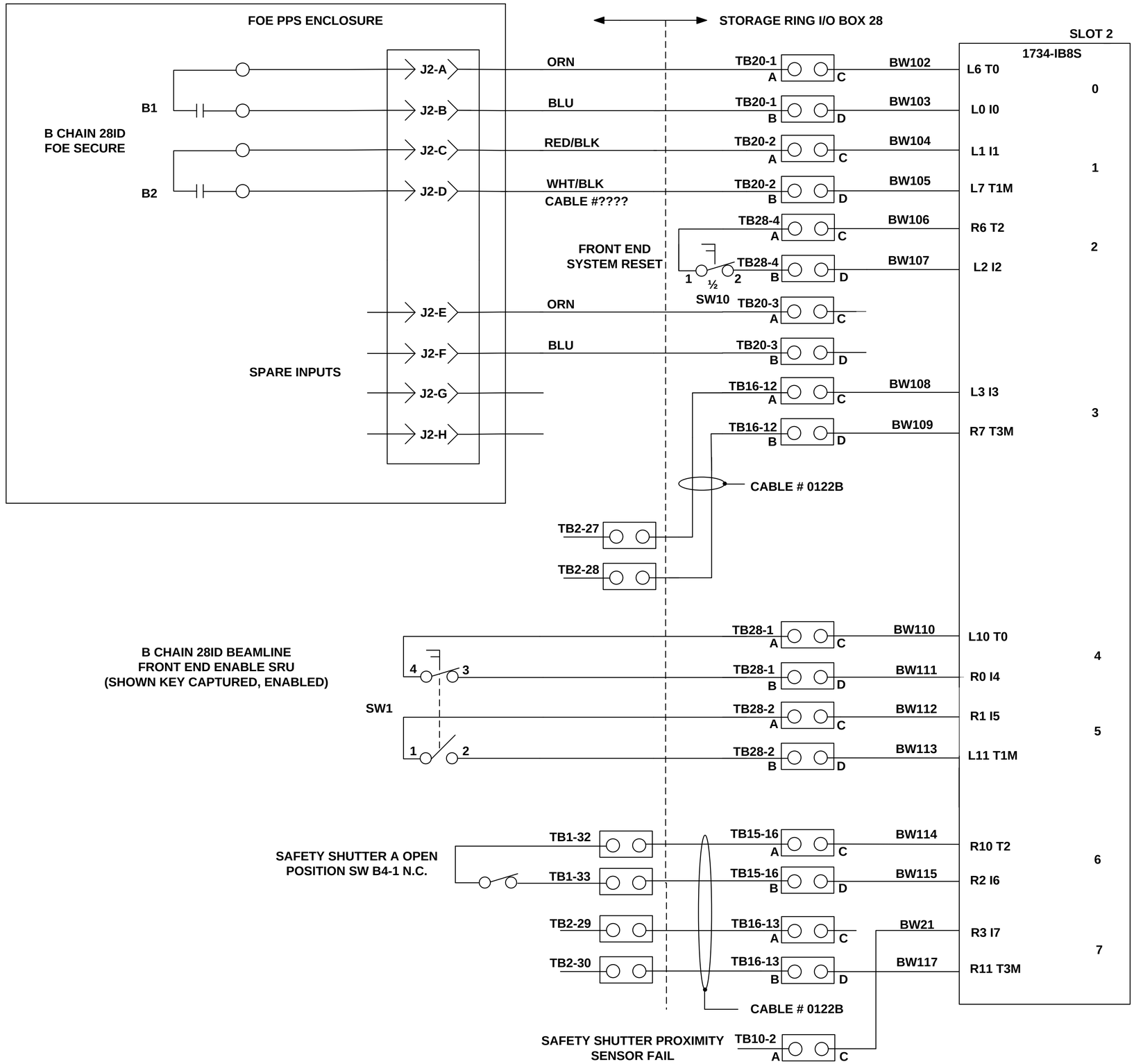

B

ID BEAMLINE GROUP

28ID

HIGHEST WIRE REF DES	BW117
UNUSED WIRE REF DES	BW118
WIRE REF DES NOT USED	———

LT-EL-SR-EI-PPS-0228-90

LT-EL-SR-EI (DRAWING DIRECTORY)	LT-EL-SR-EI-PPS-0228-90 (DRAWING NUMBER)	K (REV)
COMPUTER REPRODUCIBLE	SCALE: N/A	SHEET 42 OF 63

REV	DESCRIPTION	BY	DATE	CHK	APP
	SEE SHEET 1				

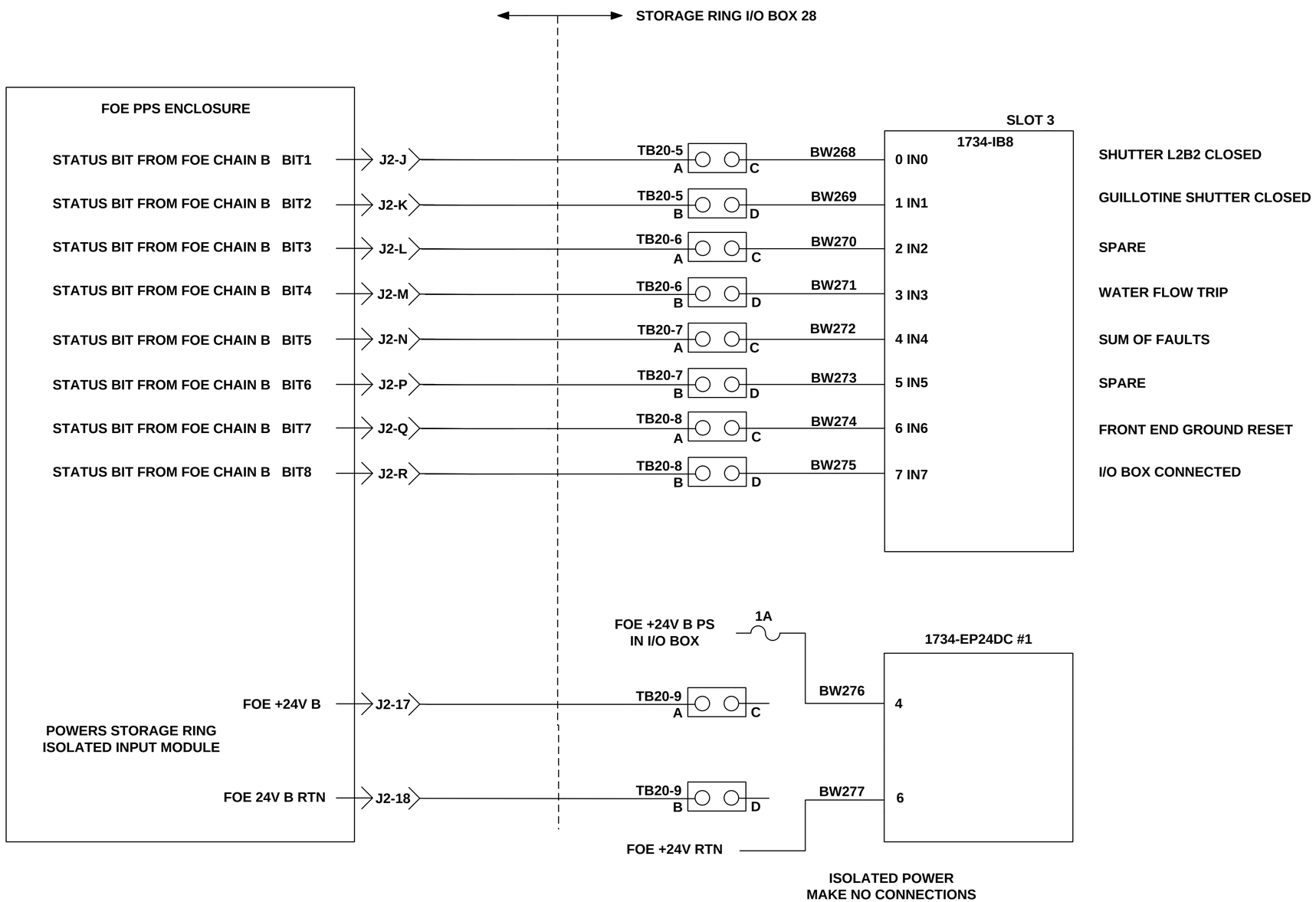

B

ID BEAMLINE GROUP

28ID

HIGHEST WIRE REF DES	BW277
UNUSED WIRE REF DES	————
WIRE REF DES NOT USED	————

LT-EL-SR-EI-PPS-0228-90

LT-EL-SR-EI (DRAWING DIRECTORY)	LT-EL-SR-EI-PPS-0228-90 (DRAWING NUMBER)	K (REV)
COMPUTER REPRODUCIBLE	SCALE: N/A	SHEET 43 OF 63

REV	DESCRIPTION	BY	DATE	CHK	APP
	SEE SHEET 1				

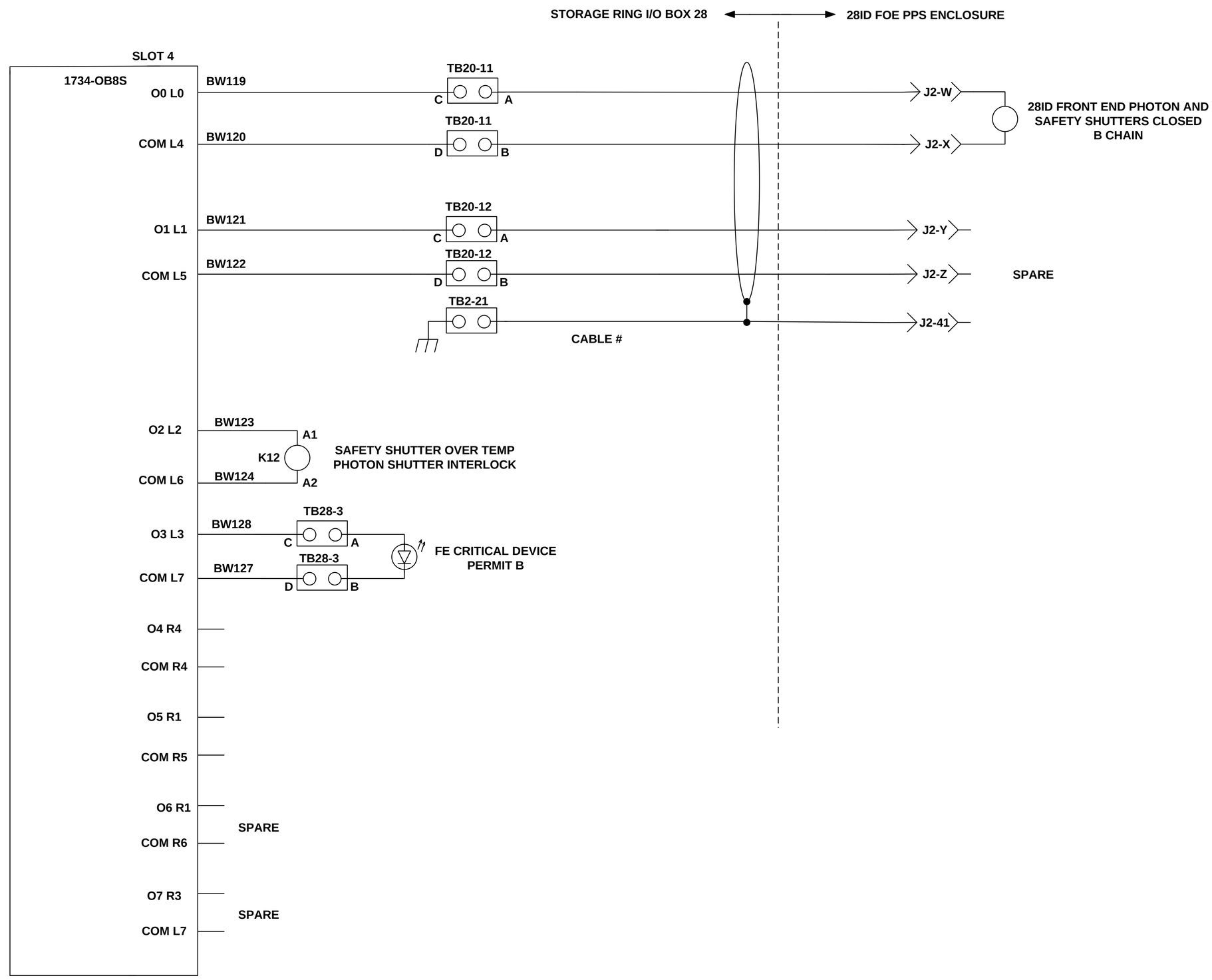

B

ID BEAMLINE GROUP

28ID

HIGHEST WIRE REF DES	BW122
UNUSED WIRE REF DES	BW123-BW127
WIRE REF DES NOT USED	————

LT-EL-SR-EI-PPS-0228-90

LT-EL-SR-EI DRAWING DIRECTORY	LT-EL-SR-EI-PPS-0228-90 DRAWING NUMBER	K REV
COMPUTER REPRODUCIBLE	SCALE: N/A	SHEET 44 OF 63

REV	DESCRIPTION	BY	DATE	CHK	APP
	SEE SHEET 1				

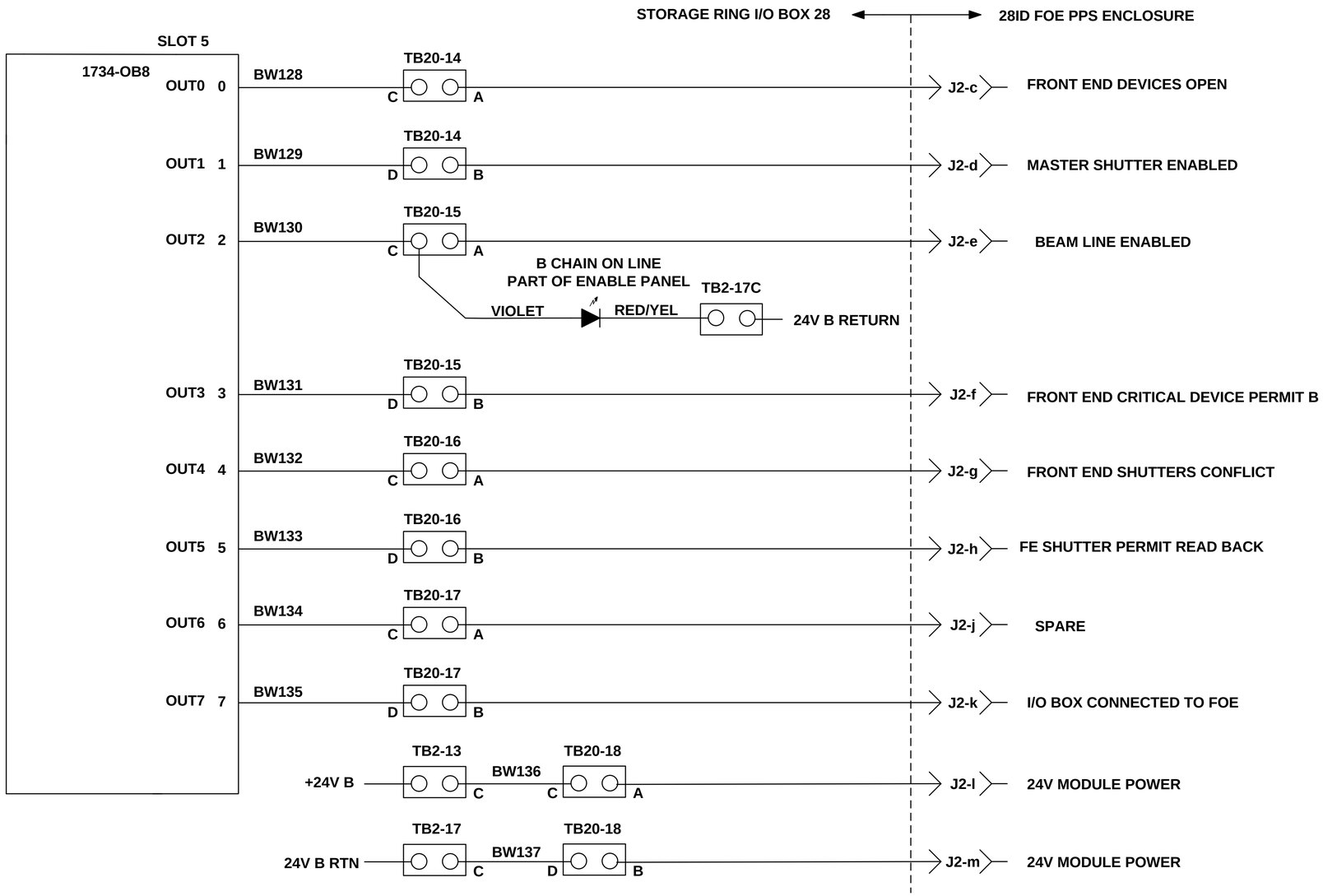

B

ID BEAMLINE GROUP

28ID

HIGHEST WIRE REF DES	BW137
UNUSED WIRE REF DES	BW138-BW140
WIRE REF DES NOT USED	————

LT-EL-SR-EI-PPS-0228-90

LT-EL-SR-EI DRAWING DIRECTORY	LT-EL-SR-EI-PPS-0228-90 DRAWING NUMBER	K REV
COMPUTER REPRODUCIBLE	SCALE: N/A	SHEET 45 OF 63

REV	DESCRIPTION	BY	DATE	CHK	APP
	SEE SHEET 1				

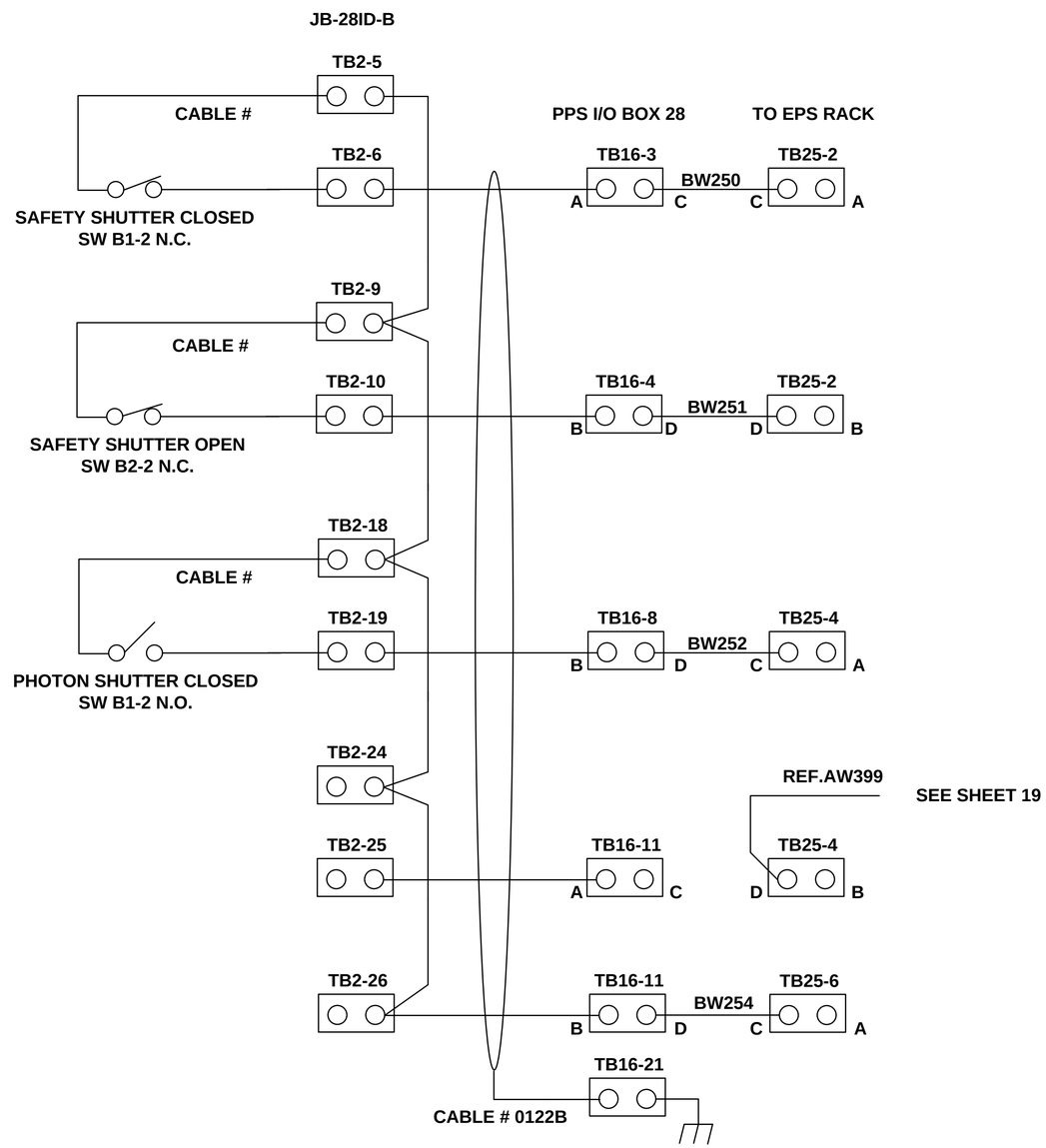

B

ID BEAMLINE GROUP

28ID

HIGHEST WIRE REF DES	BW254
UNUSED WIRE REF DES	———
WIRE REF DES NOT USED	———

LT-EL-SR-EI-PPS-0228-90

LT-EL-SR-EI DRAWING DIRECTORY	LT-EL-SR-EI-PPS-0228-90 DRAWING NUMBER	K REV
COMPUTER REPRODUCIBLE	SCALE: N/A	SHEET 46 OF 63

REV	DESCRIPTION	BY	DATE	CHK	APP
	SEE SHEET 1				

LT-EL-SR-EI-PPS-0228-90

SHEET LEFT BLANK
FOR FUTURE DATA

LT-EL-SR-EI	LT-EL-SR-EI-PPS-0228-90	K
DRAWING DIRECTORY	DRAWING NUMBER	REV
COMPUTER REPRODUCIBLE	SCALE: N/A	SHEET 47 OF 63

REV	DESCRIPTION	BY	DATE	CHK	APP
	SEE SHEET 1				

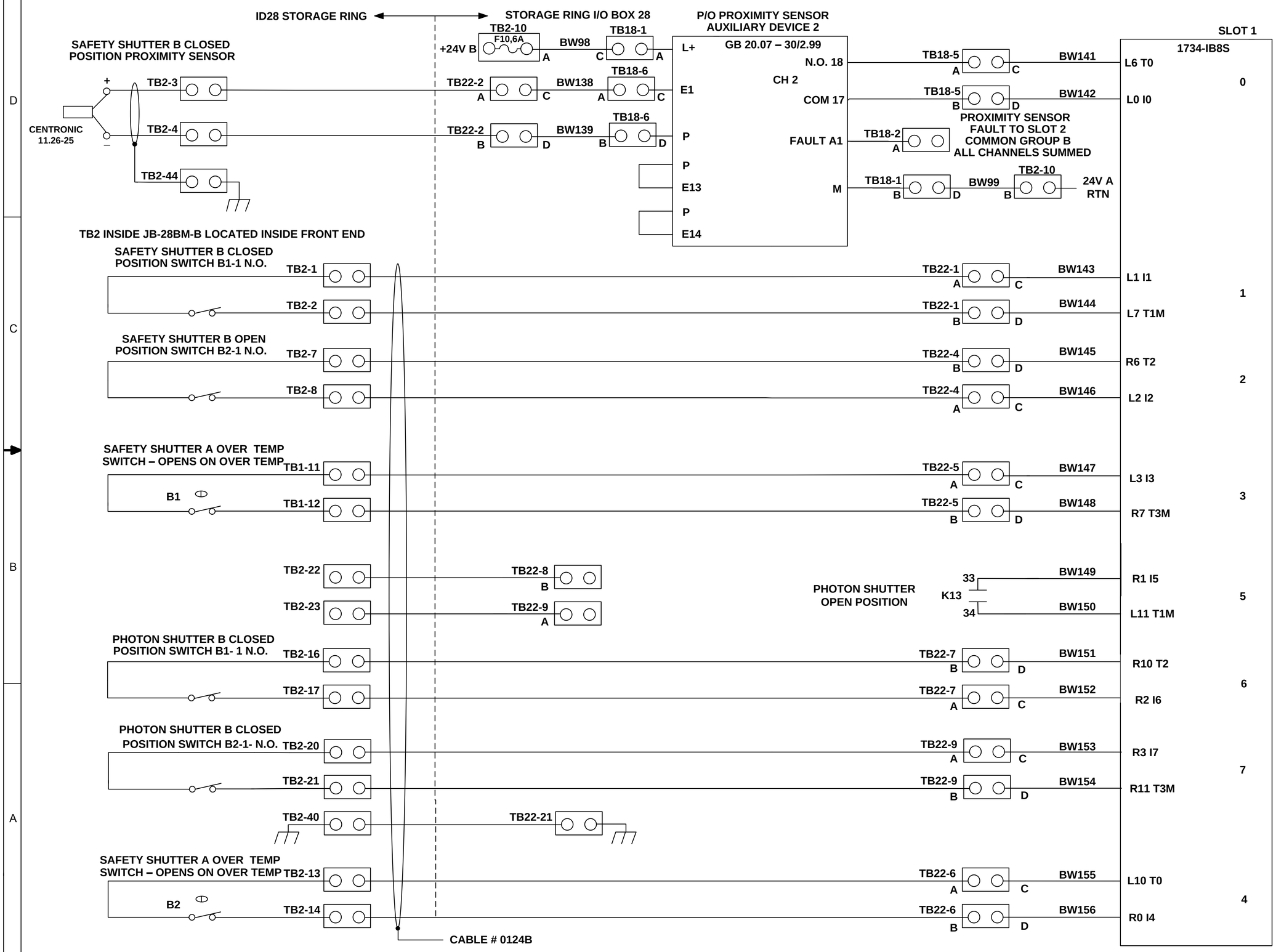

B

BM BEAMLINE GROUP

28BM

HIGHEST WIRE REF DES	BW158
UNUSED WIRE REF DES	BW159-BW160
WIRE REF DES NOT USED	BW140

LT-EL-SR-EI-PPS-0228-90

LT-EL-SR-EI (DRAWING DIRECTORY)	LT-EL-SR-EI-PPS-0228-90 (DRAWING NUMBER)	K (REV)
COMPUTER REPRODUCIBLE	SCALE: N/A	SHEET 48 OF 63

REV	DESCRIPTION	BY	DATE	CHK	APP
	SEE SHEET 1				

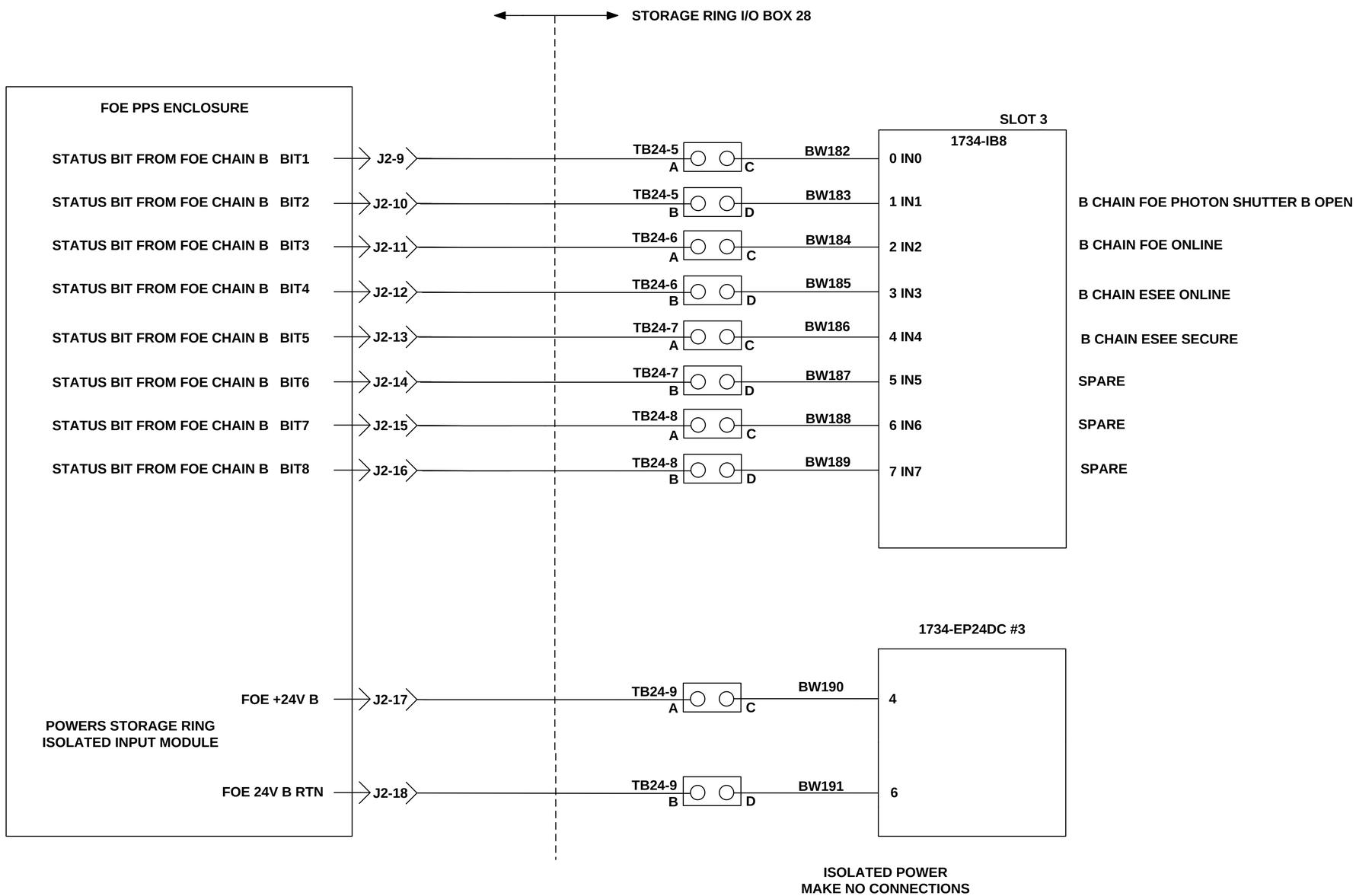

B

BM BEAMLINE GROUP

28BM

HIGHEST WIRE REF DES	BW191
UNUSED WIRE REF DES	BW192-BW197
WIRE REF DES NOT USED	————

LT-EL-SR-EI-PPS-0228-90

LT-EL-SR-EI (DRAWING DIRECTORY)	LT-EL-SR-EI-PPS-0228-90 (DRAWING NUMBER)	K (REV)
COMPUTER REPRODUCIBLE	SCALE: N/A	SHEET 49 OF 63

REV	DESCRIPTION	BY	DATE	CHK	APP
	SEE SHEET 1				

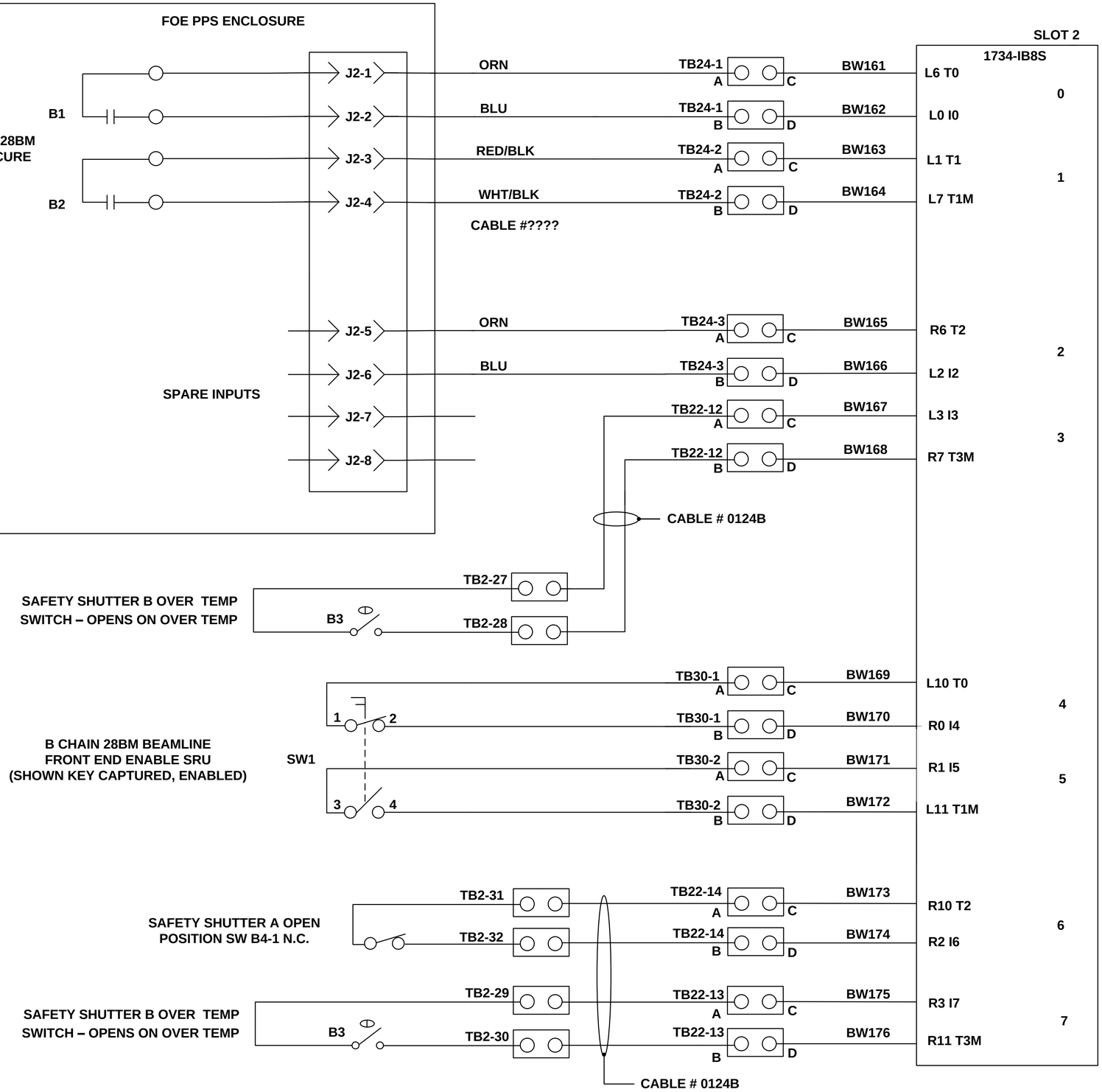

B

BM BEAMLINE GROUP

28BM

HIGHEST WIRE REF DES	BW176
UNUSED WIRE REF DES	BW177-BW181
WIRE REF DES NOT USED	————

LT-EL-SR-EI-PPS-0228-90

LT-EL-SR-EI (DRAWING DIRECTORY)	LT-EL-SR-EI-PPS-0228-90 (DRAWING NUMBER)	K (REV)
COMPUTER REPRODUCIBLE	SCALE: N/A	SHEET 50 OF 63

REV	DESCRIPTION	BY	DATE	CHK	APP
	SEE SHEET 1				

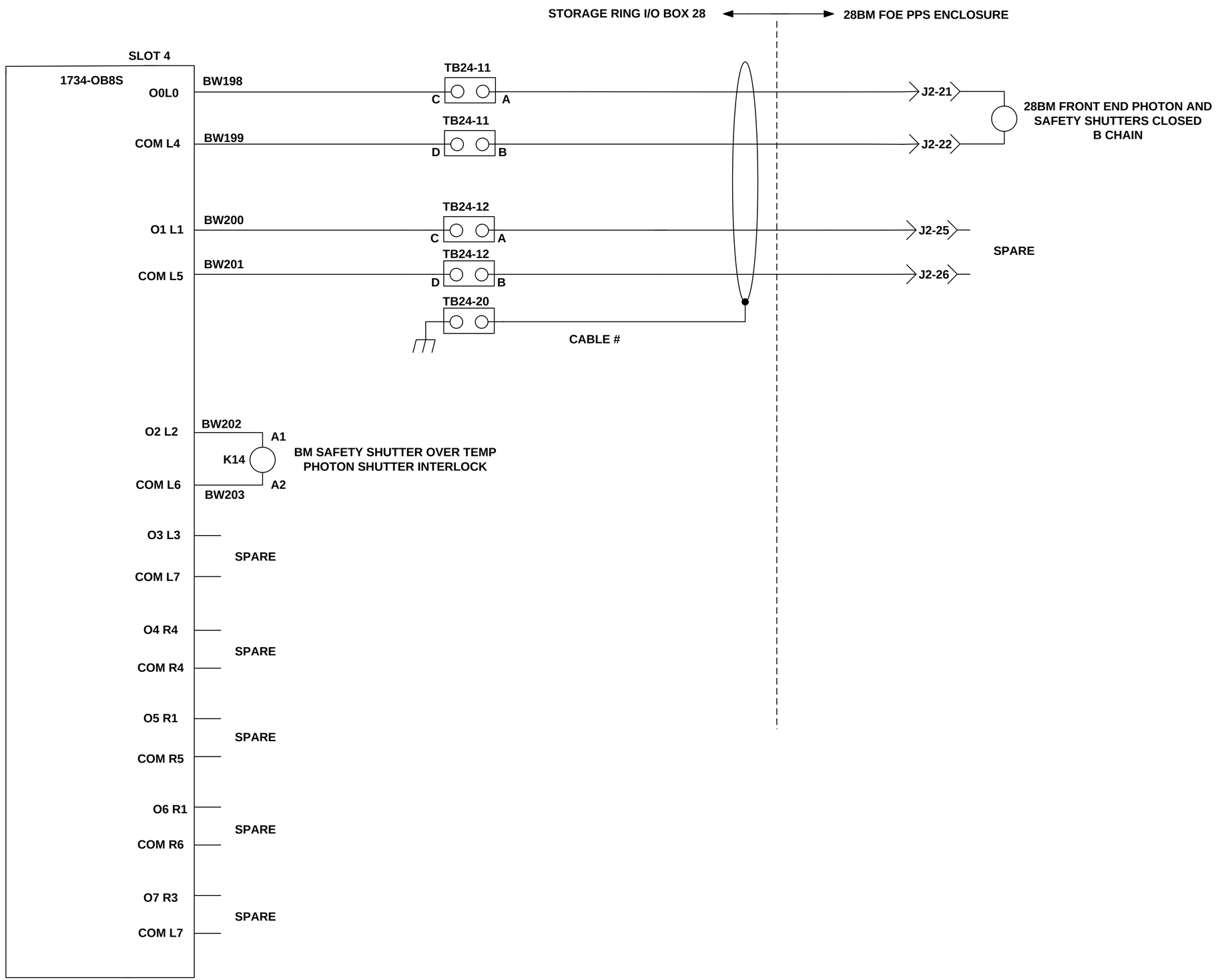

B

BM BEAMLINE GROUP

28BM

HIGHEST WIRE REF DES	BW203
UNUSED WIRE REF DES	———
WIRE REF DES NOT USED	———

LT-EL-SR-EI-PPS-0228-90

LT-EL-SR-EI DRAWING DIRECTORY	LT-EL-SR-EI-PPS-0228-90 DRAWING NUMBER	K REV
COMPUTER REPRODUCIBLE	SCALE: N/A	SHEET 51 OF 63

REV	DESCRIPTION	BY	DATE	CHK	APP
	SEE SHEET 1				

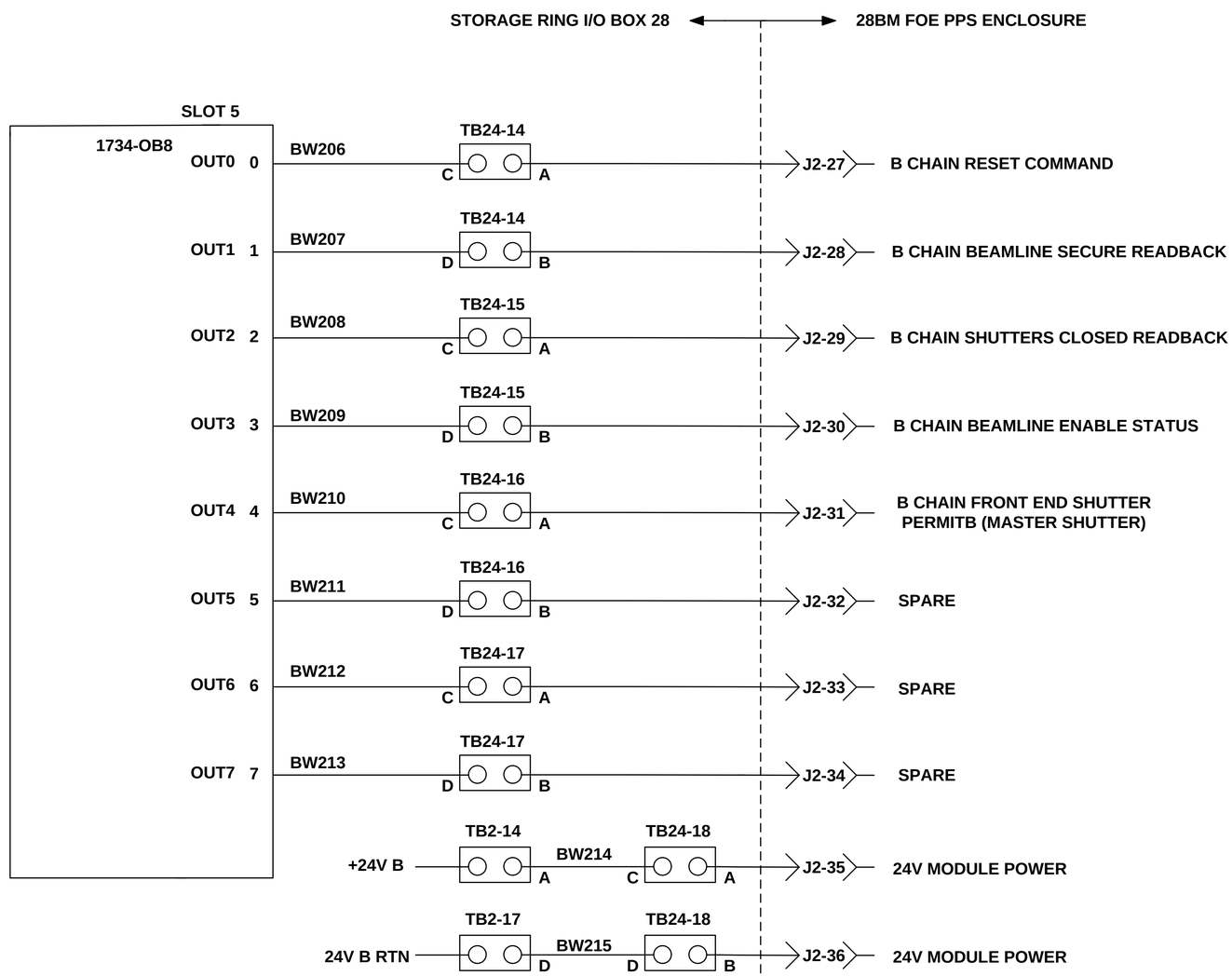

B

BM BEAMLINE GROUP

28BM

LT-EL-SR-EI-PPS-0228-90

HIGHEST WIRE REF DES	BW215
UNUSED WIRE REF DES	BW216-BW218
WIRE REF DES NOT USED	————

LT-EL-SR-EI DRAWING DIRECTORY	LT-EL-SR-EI-PPS-0228-90 DRAWING NUMBER	K REV
COMPUTER REPRODUCIBLE	SCALE: N/A	SHEET 52 OF 63

REV	DESCRIPTION	BY	DATE	CHK	APP
	SEE SHEET 1				

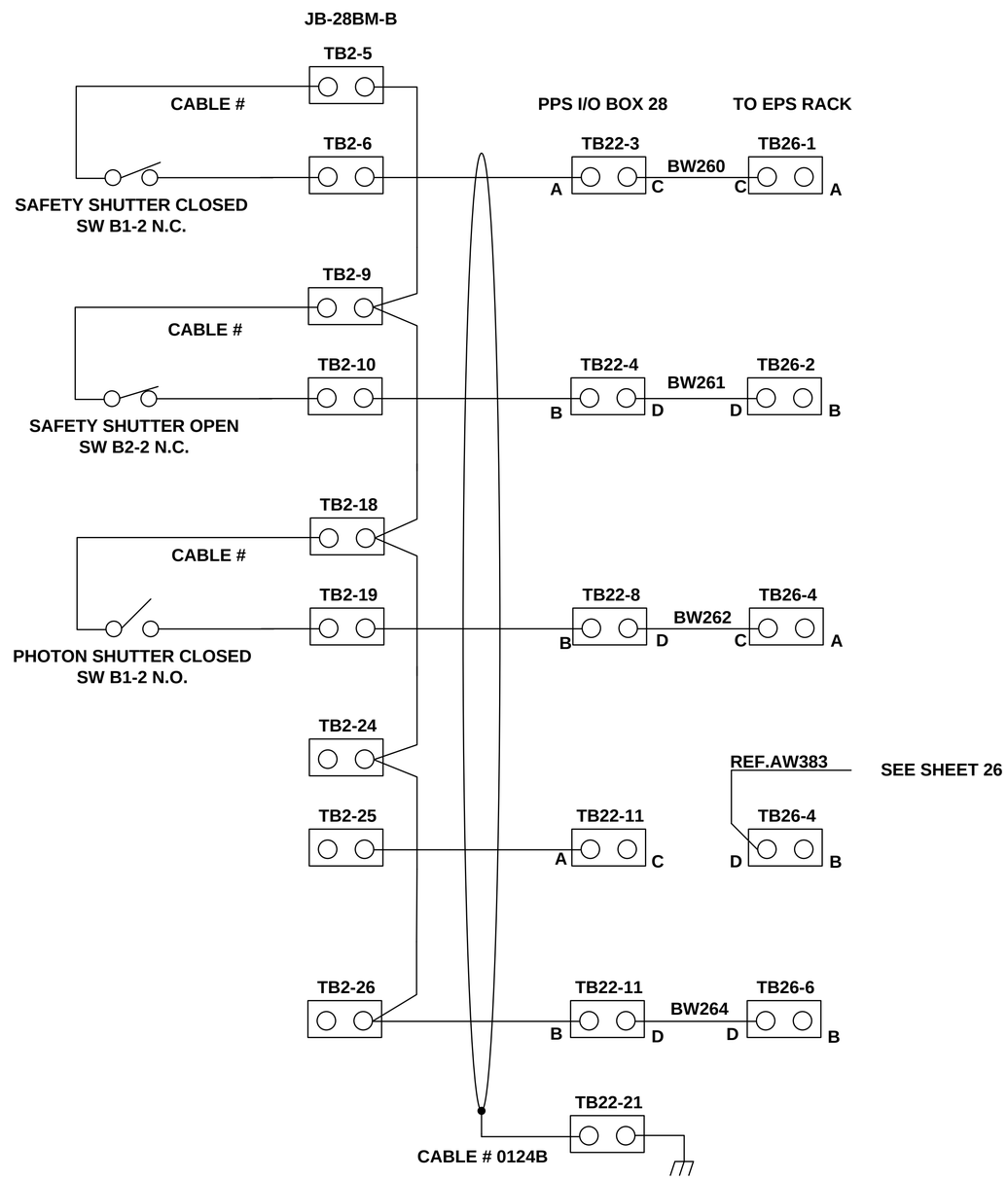

B

BM BEAMLINE GROUP

28BM

HIGHEST WIRE REF DES	BW264
UNUSED WIRE REF DES	———
WIRE REF DES NOT USED	———

LT-EL-SR-EI-PPS-0228-90

LT-EL-SR-EI DRAWING DIRECTORY	LT-EL-SR-EI-PPS-0228-90 DRAWING NUMBER	K REV
COMPUTER REPRODUCIBLE	SCALE: N/A	SHEET 53 OF 63

REV	DESCRIPTION	BY	DATE	CHK	APP
	SEE SHEET 1				

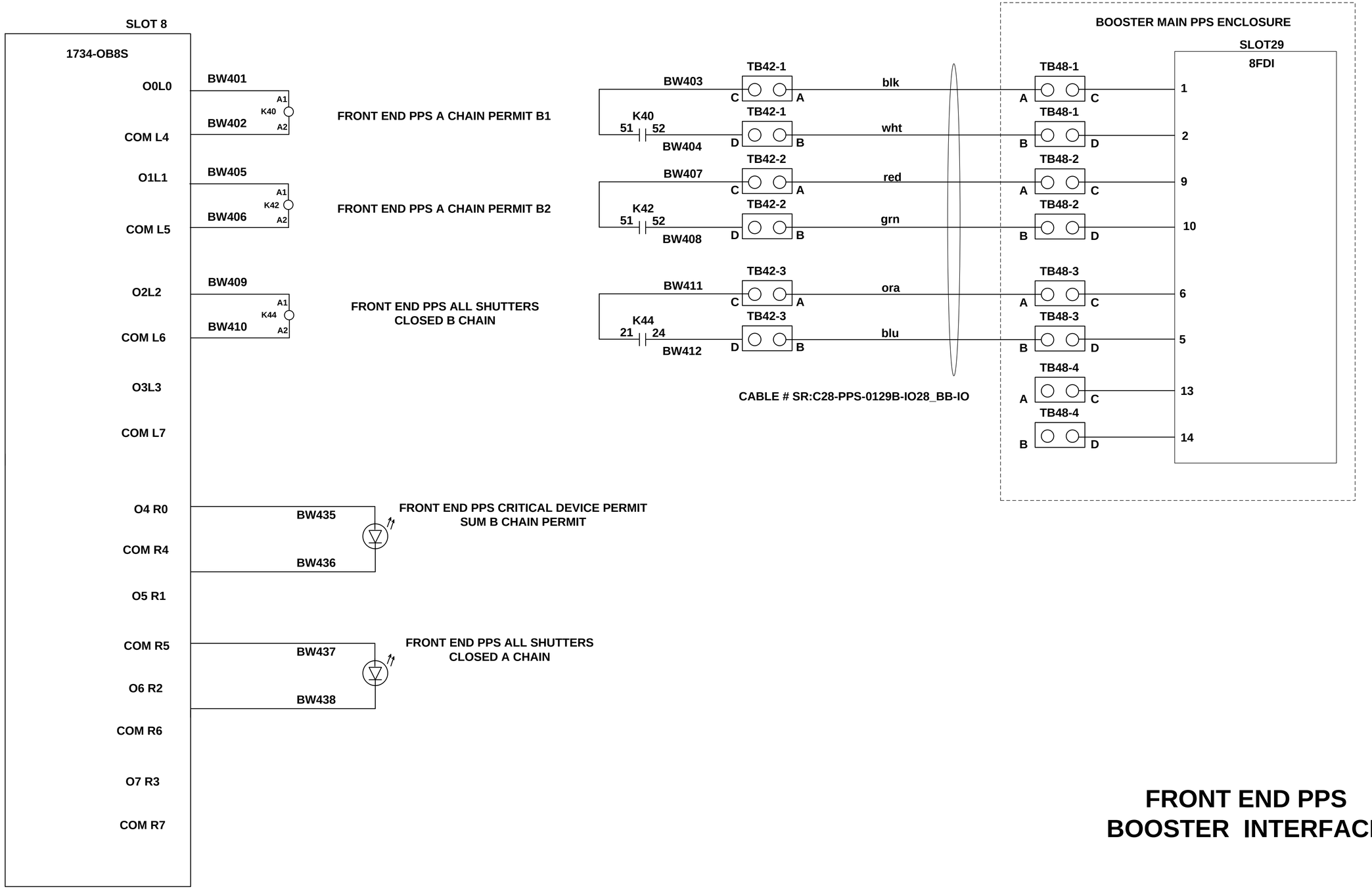

FRONT END PPS BOOSTER INTERFACE

B

LT-EL-SR-EI-PPS-0228-90

LT-EL-SR-EI (DRBWING DIRECTORY)	LT-EL-SR-EI-PPS-0228-90 (DRBWING NUMBER)	K (REV)
COMPUTER REPRODUCIBLE	SCALE: N/A	SHEET 54 OF 63

REV	DESCRIPTION	BY	DATE	CHK	APP
	SEE SHEET 1				

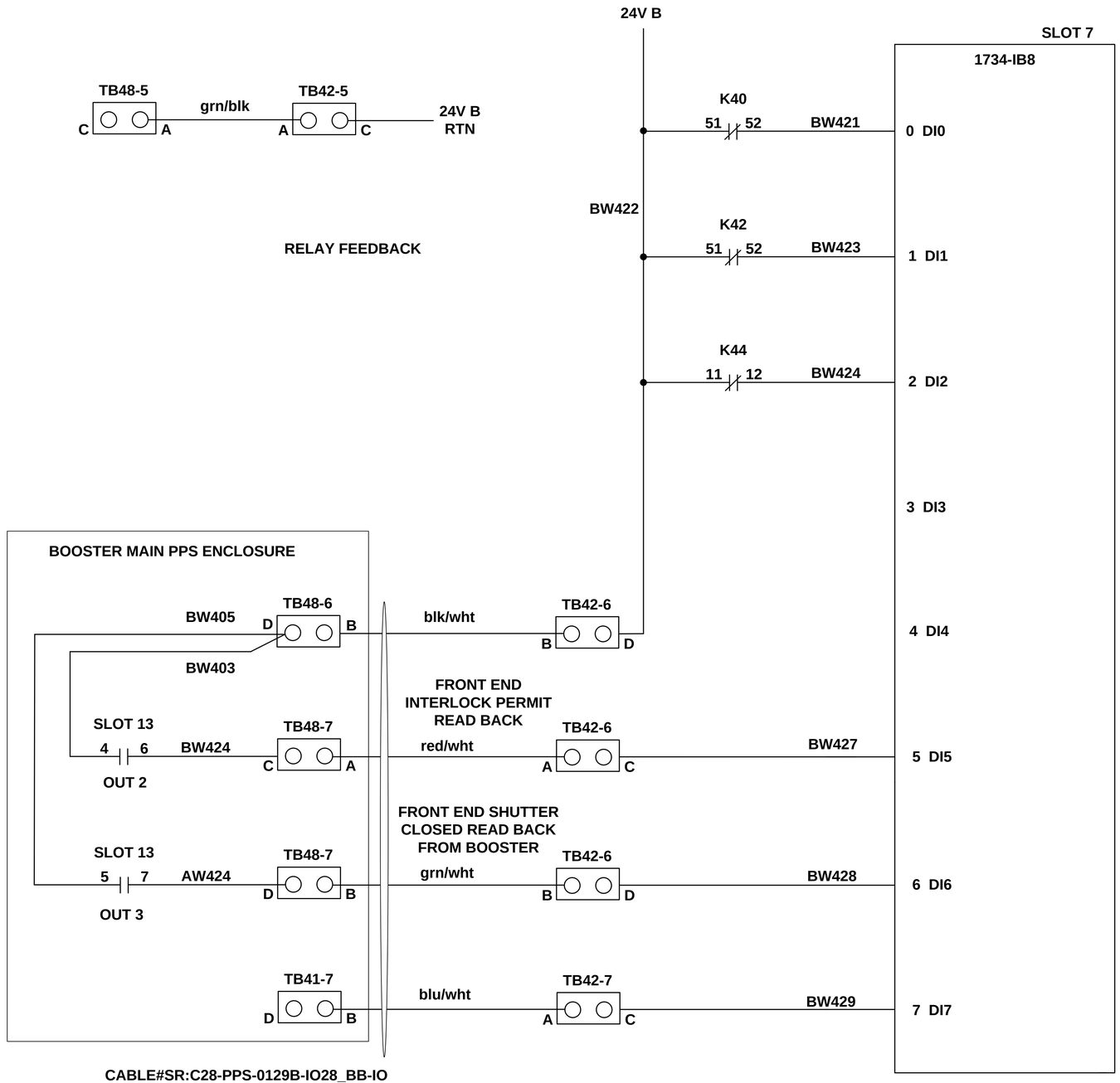

B

FRONT END PPS BOOSTER INTERFACE

LT-EL-SR-EI-PPS-0228-90

LT-EL-SR-EI (DRBWING DIRECTORY)	LT-EL-SR-EI-PPS-0228-90 (DRBWING NUMBER)	K (REV)
COMPUTER REPRODUCIBLE	SCALE: N/A	SHEET 55 OF 63

REV	DESCRIPTION	BY	DATE	CHK	APP
	SEE SHEET 1				

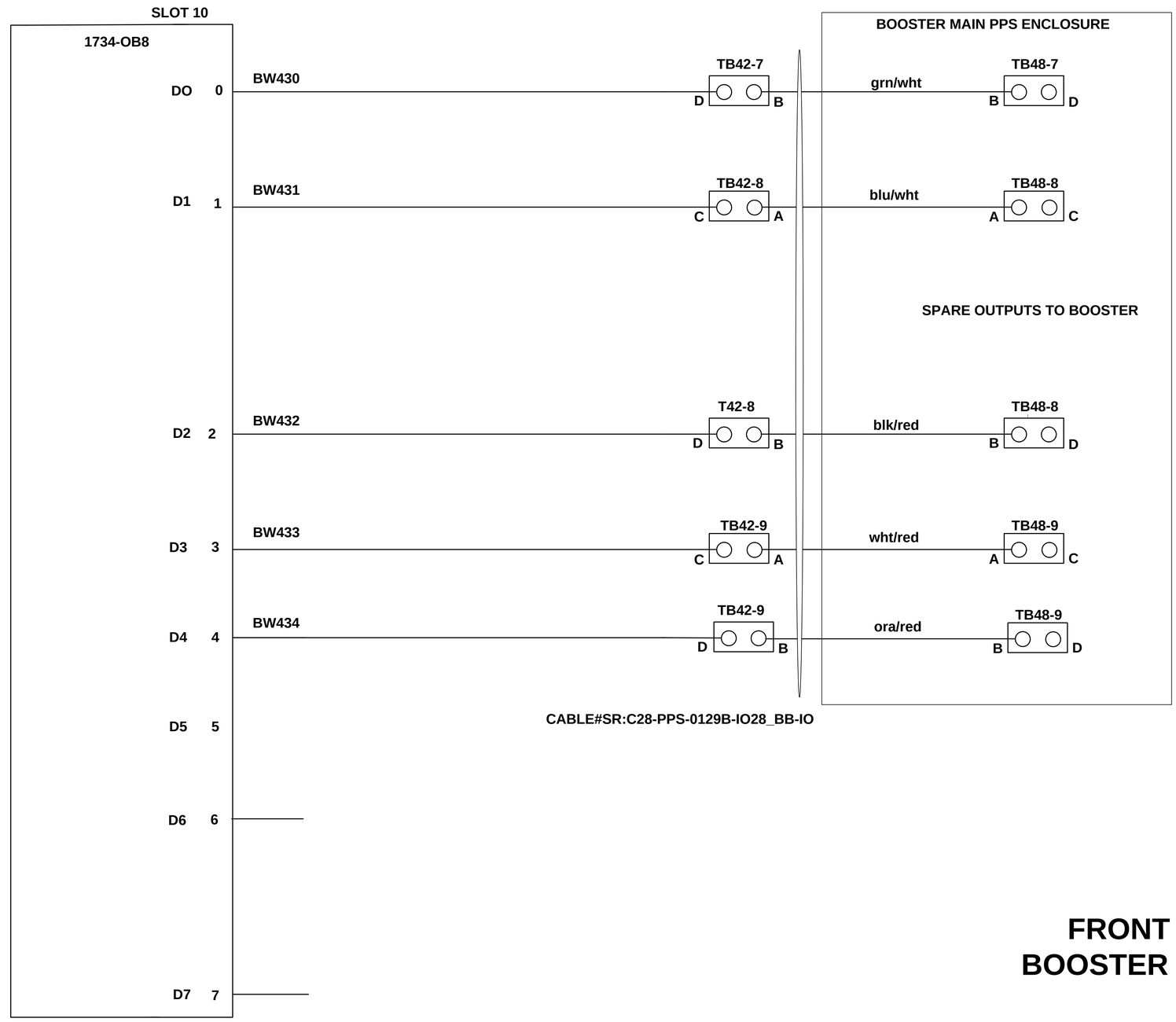

FRONT END PPS BOOSTER INTERFACE

B

LT-EL-SR-EI-PPS-0228-90

LT-EL-SR-EI (DRAWING DIRECTORY)	LT-EL-SR-EI-PPS-0228-90 (DRAWING NUMBER)	K (REV)
COMPUTER REPRODUCIBLE	SCALE: N/A	SHEET 56 OF 63

REV	DESCRIPTION	BY	DATE	CHK	APP
	SEE SHEET 1				

B CHAIN
+24V WIRES ARE BRN
24V RTN WIRES ARE GRY
SIGNAL WIRES ARE BLU

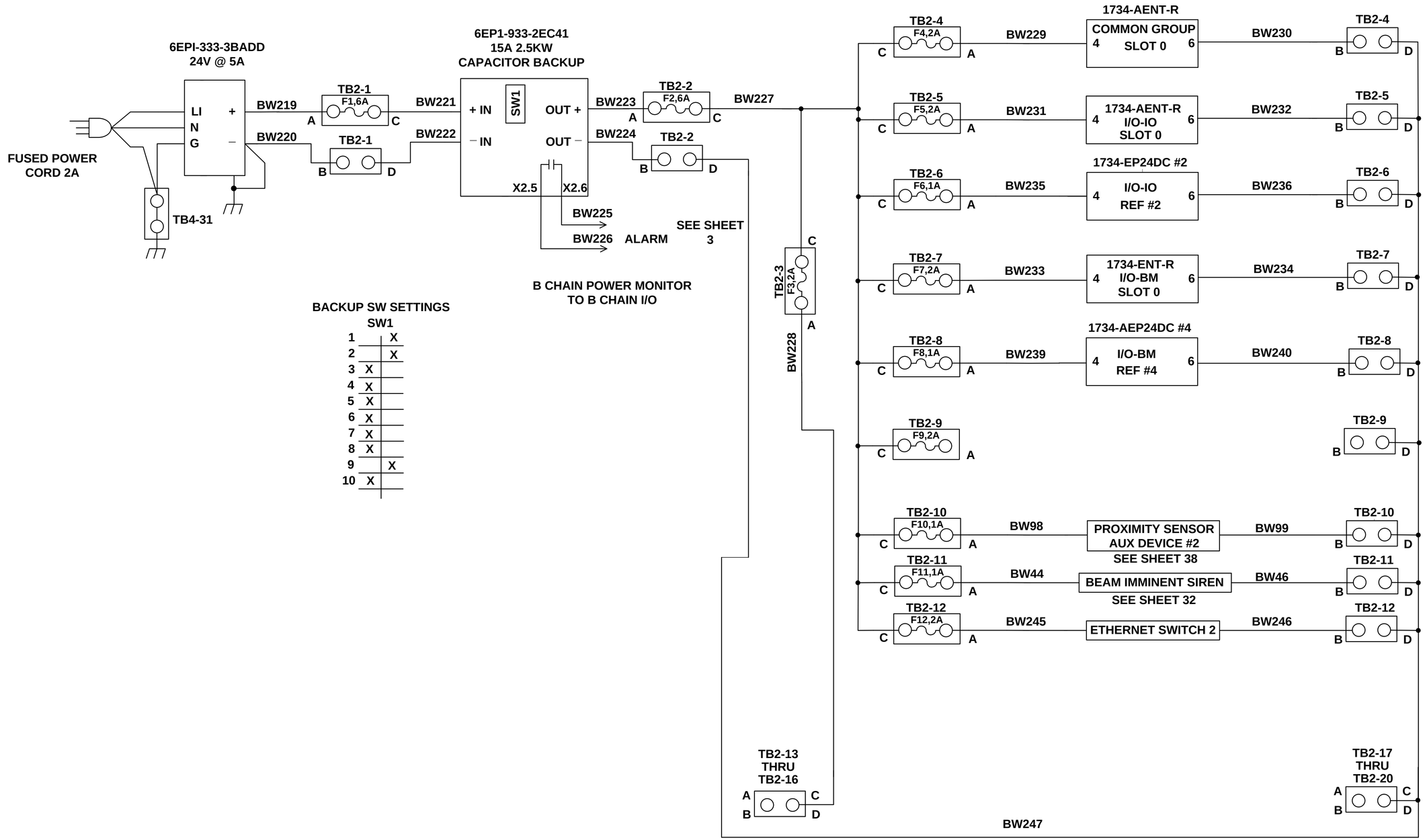

POWER DISTRIBUTION

B

LT-EL-SR-EI-PPS-0228-90

HIGHEST WIRE REF DES	BW247
UNUSED WIRE REF DES	———
WIRE REF DES NOT USED	———

LT-EL-SR-EI (DRAWING DIRECTORY)	LT-EL-SR-EI-PPS-0228-90 (DRAWING NUMBER)	K (REV)
COMPUTER REPRODUCIBLE	SCALE: N/A	SHEET 57 OF 63

REV	DESCRIPTION	BY	DATE	CHK	APP
	SEE SHEET 1				

PPS I/O BOX TERMINAL LAYOUT TYPE 1

TYPE 1 I/O BOX					
ROW 1					
POWER SUPPLIES					
A CHAIN POWER SUPPLY		6EP1 333-3BA00			SIEMENS
A CHAIN CAPACITOR BACKUP		6EP1 333-2EC41			SIEMENS
TB41	8 2	1>10 1	END CLAMP 5		
K39		OA5601			ALTECH
K41		OA5601			ALTECH
K43		5669			ALTECH
K45		5669			ALTECH
K47		5669			ALTECH
K49		5669			ALTECH
A CHAIN SWITCH 1		6GK5208-0B810-2AA3			SIEMENS
TB42	8 2	1>10 1	END CLAMP 5		
K38		2981444			PHOENIX
K40		2981444			PHOENIX
K42		SRG282Z			ELESTA
B CHAIN POWER SUPPLY		6EP1 333-3BA00			SIEMENS
B CHAIN CAPACITOR BACKUP		6EP1 333-2EC41			SIEMENS
ROW 2					
A CHAIN I/O					
I/O COMMON GROUP A					
SLOT	MODULE	SOCKET	SOCKET		
0	6ES7151-3BA23-0AB0	NA	PN INTERFACE MODULE IM151-3 PN		SIEMENS
1	6ES7138-4CA50-0AB0	6ES7193-4CC20-0AA0	POWER MODULE PM-E		
2	6ES7138-4FA04-0AB0	6ES7193-4CF40-0AA0	4/8FDI 8 SAFE IN		SIEMENS
3	6ES7138-4FA04-0AB0	6ES7193-4CF40-0AA0	4/8FDI 8 SAFE IN		SIEMENS
4	6ES7131-4BF00-0AB0	6ES7193-4CA40-0AA0	8DI 8 STANDARD IN		SIEMENS
5	6ES7132-4BF00-0AA0	6ES7193-4CA40-0AA0	8D0 STANDARD.OUT		SIEMENS
6	6ES7138-4FB03-0AA0	6ES7193-4CF40-0AA0	4FD0 4 SAFE OUT		SIEMENS

LT-EL-SR-EI-PPS-0228-90

REV	DESCRIPTION	BY	DATE	CHK	APP
	SEE SHEET 1				

PPS I/O BOX TERMINAL LAYOUT TYPE 1

I/O ID GATE/LABRYNTH GROUP A				
SLOT	MODULE	SOCKET		
7	6ES7138-4CA50-0AB0	6ES7193-4CC20-0AA0	POWER MODULE PM-E	SIEMENS
8	6ES7138-4FA04-0AB0	6ES7193-4CF40-0AA0	4/8FDI 8 SAFE IN	SIEMENS
9	6ES7131-4BF00-0AA0	6ES7193-4CA40-0AA0	8DI 8 STANDARD IN	SIEMENS
10	6ES7138-4FB03-0AB0	6ES7193-4CF40-0AA0	4FD0 8 SAFE OUT	SIEMENS
11	6ES7132-4BF00 0AA0	6ES7193-4CA40-0AA0	800 8 STANDARD OUT	SIEMENS
I/O ID BEAMLINE GROUP A				
SLOT	MODULE	SOCKET		
0	6ES7151-3BA23-0AB0	NA	PN INTERFACE MODULE IM151-3 PN	SIEMENS
1	6ES7138-4CA50-0AB0	6ES7193-4CC20-0AA0	POWER MODULE PM-E	SIEMENS
2	6ES7193-4CC20-0AB0	6ES7193-4CF40-0AA0	4/8FDI 8 SAFE IN	SIEMENS
3	6ES7193-4CC20-0AB0	6ES7193-4CF40-0AA0	4/8FDI 8 SAFE IN	SIEMENS
4	6ES7138-4CA50-0AB0	6ES7193-4CC20-0AA0	POWER MODULE PM-E	SIEMENS
5	6ES7131-4BF00-0AA0	6ES7193-4CA40-0AA0	8DI 8 STANDARD IN	SIEMENS
6	6ES7138-4CA50-0AB0	6ES7193-4CC20-0AA0	POWER MODULE PM-E	SIEMENS
7	6ES7138-4FB03-0AB0	6ES7193-4CF40-0AA0	4FD0 4 SAFE OUT	SIEMENS
8	6ES7132-4BF00-0AA0	6ES7193-4CA40-0AA0	8D0 STANDARD.OUT	SIEMENS
9	6ES7138-4FB03-0AB0	6ES7193-4CF40-0AA0	4FD0 4 SAFE OUT	SIEMENS
10	6ES7138-4FB03-0AB0	6ES7193-4CF40-0AA0	4FD0 4 SAFE OUT	SIEMENS
11	6ES7132-4BF00-0AA0	6ES7193-4CA40-0AA0	8D0 STANDARD.OUT	SIEMENS
12	6ES7131-4BF00-0AA0	6ES7193-4CA40-0AA0	8DI 8 STANDARD IN	SIEMENS
I/O BM BEAMLINE GROUP A				
SLOT	MODULE	SOCKET		
0	6ES7151-3BA23-0AB0	NA	PN INTERFACE MODULE IM151-3 PN	SIEMENS
1	6ES7138-4CA50-0AB0	6ES7193-4CC20-0AA0	POWER MODULE PM-E	SIEMENS
2	6ES7138-4FA04-0AB0	6ES7193-4CF40-0AA0	4/8FDI 8 SAFE IN	SIEMENS
3	6ES7138-4FA04-0AA0	6ES7193-4CF40-0AA0	4/8FDI 8 SAFE IN	SIEMENS
4	6ES7138-4CA50-0AB0	6ES7193-4CC20-0AA0	POWER MODULE PM-E	SIEMENS
5	6ES7131-4BF00-0AA0	6ES7193-4CA40-0AA0	8DI 8 STANDARD IN	SIEMENS
6	6ES7138-4CA50-0AB0	6ES7193-4CC20-0AA0	POWER MODULE PM-E	SIEMENS
7	6ES7138-4FB03-0AB0	6ES7193-4CF40-0AA0	4FD0 4 SAFE OUT	SIEMENS
8	6ES7132-4BF00-0AA0	6ES7193-4CA40-0AA0	8D0 STANDARD.OUT	SIEMENS
TB27	4-2 COVER LARGE 3	1>6 1		
TB29	4-2 COVER LARGE 3	1>6 1	END CLAMP 5	

1	3044636
2	3044092
3	3047293
4	3047303
5	1201413
6	EPDDFL4U
7	3044542
8	DDFL-4U
9	3044076
10	3047028
11	3047170

LT-EL-SR-EI-PPS-0228-90

LT-EL-SR-EI (DRAWING DIRECTORY)	LT-EL-SR-EI-PPS-0228-90 (DRAWING NUMBER)	K (REV)
COMPUTER REPRODUCIBLE	SCALE: N/A	SHEET 59 OF 63

REV	DESCRIPTION	BY	DATE	CHK	APP
	SEE SHEET 1				

PPS I/O BOX TERMINAL LAYOUT TYPE 1

ROW 3						
TB15	END CLAMP 5	4-2 COVER LARGE 3	1>20 1	4-2 COVER SMALL 4	21 2	
TB19	4-2 COVER LARGE 3	1>20 1	4-2 COVER SMALL 4	21 2		
TB21	4-2 COVER LARGE 3	1>20 1	4-2 COVER SMALL 4	21 2		
TB23	4-2 COVER LARGE 3	1>20 1	21 2			
TB25	4-2 COVER LARGE 3	1>5 1 / 6 7 / 7>15 1	16 2			
TB1	FUSE PLATE 6	1>12 8	13>21 7	END CLAMP 5		
			USE JUMPER STRIPS 1>12 AND 13>21			
SPACE FOR AUXILLRY DEVICE 1, A CHAIN		1.125"				
TB17	END CLAMP 5	4-2 COVER LARGE 3	1>6 1	4-2 COVER SMALL 4	END CLAMP 5	
ROW 4						
TB3	END CLAMP 5	4-2 COVER LARGE 3	1>7 1	4-2 COVER SMALL 4	8 2	
TB5	4-2 COVER LARGE 3	1>2 1	4-2 COVER SMALL 4	FUSE PLATE 6	3 8	4 9
TB7	4-2 COVER LARGE 3	1>2 1	4-2 COVER SMALL 4	FUSE PLATE 6	3 8	4 9
TB9	4-2 COVER LARGE 3	1>3 1	4-2 COVER SMALL 4	4 2		
TB11	4-2 COVER LARGE 3	1>3 1	4-2 COVER SMALL 4	4 2		
TB13	4-2 COVER LARGE 3	1>17 1	4-2 COVER SMALL 4	18 2	END CLAMP 5	

RELAY	MODULE	SOCKET	
K1	ALTECH 5669	SOCKET SCHRACK RT 78626	A CHAIN HII BEAM IMMINENT SIREN PERMIT
K3	ALTECH 5669	SOCKET SCHRACK RT 78626	A CHAIN HII BEAM IMMINENT BEACON PERMIT
K5	ELESTA SIM3	ELESTA SRD-SIM4	ID PHOTON SHUTTER OPEN FAN OUT RELAY

1	3044636
2	3044092
3	3047293
4	3047303
5	1201413
6	EPDDFL4U
7	3044542
8	DDFL-4U
9	3044076
10	3047028
11	3047170

LT-EL-SR-EI-PPS-0228-90

LT-EL-SR-EI (DRAWING DIRECTORY)	LT-EL-SR-EI-PPS-0228-90 (DRAWING NUMBER)	K (REV)
COMPUTER REPRODUCIBLE	SCALE: N/A	SHEET 60 OF 63

REV	DESCRIPTION	BY	DATE	CHK	APP
	SEE SHEET 1				

RELAY	MODULE	SOCKET	
K7	ALTECH 5669	SOCKET SCHRACK RT 78626	A CHAIN ACCESS PERMIT RELAY
K9	ALTECH 5669	SOCKET SCHRACK RT 78626	A CHAIN LOCK PERMIT
K11	ALTECH 5669	SOCKET SCHRACK RT 78626	A CHAIN ID MASTER SHUTTER RELAY
K13	ELESTA SIM3	SOCKET ELESTA SRD-SIM4	BM PHOTON SHUTTER OPEN FAN OUT RELAY
K15	ALTECH 5669	SOCKET SCHRACK RT 78626	ID REQUEST TO CLOSE SHUTTERS
K17	ALTECH 5669	SOCKET SCHRACK RT 78626	BM REQUEST TO CLOSE SHUTTERS
K19	ALTECH 5669	SOCKET SCHRACK RT 78626	A CHAIN ID MASTER SHUTTER RELAY
K21	ALTECH 5669	SOCKET SCHRACK RT 78626	A CHAIN ID MASTER SHUTTER RELAY
K23	ALTECH 5669	SOCKET SCHRACK RT 78626	A CHAIN ID MASTER SHUTTER RELAY
K25	ALTECH 5669	SOCKET SCHRACK RT 78626	A CHAIN ID MASTER SHUTTER RELAY
K2	ELESTA SRG282Z	SOCKET SCHRACK RT 78626	B CHAIN HII BEAM IMMINENT SIREN PERMIT
K4	ELESTA SRG282Z	SOCKET SCHRACK RT 78626	B CHAIN HII BEAM IMMINENT BEACON PERMIT
K6	ELESTA SRG282Z	SOCKET SCHRACK RT 78626	B CHAIN AREA SAFE SIGN PERMIT
K10	ELESTA SRG282Z	SOCKET SCHRACK RT 78626	B CHAIN DOOR LOCK PERMIT
K12	ELESTA SRG282Z	SOCKET SCHRACK RT 78626	B CHAIN HII BEAM IMMINENT SIREN PERMIT
K14	ELESTA SRG282Z	SOCKET SCHRACK RT 78626	B CHAIN HII BEAM IMMINENT SIREN PERMIT

TB4	END CLAMP 5	4-2 COVER LARGE 3	1>10 1	4-2 COVER SMALL 4	11 2
TB6	4-2 COVER LARGE 3	1>3 1	4-2 COVER SMALL 4	4 2	
TB8	4-2 COVER LARGE 3	1>3 1	4-2 COVER SMALL 4	4 2	
TB12	4-2 COVER LARGE 3	1>9 1	4-2 COVER SMALL 4	10 2	END CLAMP 5

1	3044636
2	3044092
3	3047293
4	3047303
5	1201413
6	EPDDFL4U
7	3044542
8	DDFL-4U
9	3044076
10	3047028
11	3047170

LT-EL-SR-EI-PPS-0228-90

LT-EL-SR-EI DRAWING DIRECTORY	LT-EL-SR-EI-PPS-0228-90 DRAWING NUMBER	K REV
COMPUTER REPRODUCIBLE	SCALE: N/A	SHEET 61 OF 63

REV	DESCRIPTION	BY	DATE	CHK	APP
	SEE SHEET 1				

PPS I/O BOX TERMINAL LAYOUT TYPE 1

ROW 5					
B CHAIN I/O					
I/O COMMON GROUP B					
SLOT	MODULE	SOCKET (QTY)			
0	1734-AENTR		24V DC ETHERNET ADAPTER		AB
1	1734-IB8S	1734-TOP3 (2)	AB INPUT F 8 SAFETY IN		AB
2	1734-IB8	1734-TB	AB INPUT STABDARD 8 STANDARD IN		AB
3	1734-OB8	1734-TB	8 CHANNEL STANDARD OUT		AB
4	1734-OW4	1734-TB	RELAY MODULE 4 OUTPUT		AB
5	1734-OB8S	1734-TOP3 (2)	AB INPUT F 8 SAFETY OUT		AB
I/O GATE/LABYRINTH GROUP B					
6	1734-IB8S	1734-TOP3 (2)	AB INPUT F 8 SAFETY IN		AB
7	1734-IB8S	1734-TB	AB INPUT STABDARD 8 STANDARD IN		AB
8	1734-IB8	1734-TB	RELAY MODULE OUT		AB
9	1734-OW4	1734-TOP3 (2)	AB INPUT F 8 SAFETY IN		AB
I/O ID BEAMLINE GROUP B					
SLOT	MODULE	SOCKET			
0	1734-AENTR		24V DC ETHERNET ADAPTER		AB
1	1734-IB8S	1734-TOP3 (2)	AB INPUT F 8 SAFETY IN		AB
2	1734-IB8S	1734-TOP3 (2)	AB INPUT F 8 SAFETY IN		AB
	1734-EP24DC		24V DC BUSS EXT MOD.		AB
3	1734-OB8	1734-TB	AB INPUT STABDARD 8 STANDARD IN		AB
	1734-EP24DC		24V DC BUSS EXT MOD.		AB
4	1734-IB8S	1734-TOP3 (2)	8 SAFETY OUT		AB
5	1734-OB8	1734-TB	8 CHANNEL STANDARD OUT		AB
6	1734-IB8S	1734-TOP3 (2)	AB INPUT F 8 SAFETY IN		AB
7	1734-IB8S	1734-TB	AB INPUT STABDARD 8 STANDARD IN		AB
8	1734-OB8S	1734-TOP3 (2)	AB INPUT F 8 SAFETY OUT		AB
I/O BM BEAMLINE GROUP B					
SLOT	MODULE	SOCKET			
0	1734-AENTR		24V DC ETHERNET ADAPTER		AB
1	1734-IB8S	1734-TOP3 (2)	AB INPUT F 8 SAFETY IN		AB
2	1734-IB8S	1734-TOP3 (2)	AB INPUT F 8 SAFETY IN		AB
	1734-EP24DC		24V DC BUSS EXT MOD.		AB
3	1734-IB8S	1734-TB	AB INPUT STABDARD 8 STANDARD IN		AB
	1734-EP24DC		24V DC BUSS EXT MOD.		AB
4	1734-IB8S	1734-TOP3 (2)	8 SAFETY OUT		AB
5	1734-OB8	1734-TB	8 CHANNEL STANDARD OUT		AB
TB28	4-2 COVER LARGE 3	1>2 1	4-2 COVER SMALL 4		
TB30	4-2 COVER LARGE 3	1>2 1	4-2 COVER SMALL 4	END CLAMP 5	

1	3044636
2	3044092
3	3047293
4	3047303
5	1201413
6	EPDDFL4U
7	3044542
8	DDFL-4U
9	3044076
10	3047028
11	3047170

LT-EL-SR-EI-PPS-0228-90

LT-EL-SR-EI (DRAWING DIRECTORY)	LT-EL-SR-EI-PPS-0228-90 (DRAWING NUMBER)	K (REV)
COMPUTER REPRODUCIBLE	SCALE: N/A	SHEET 62 OF 63

REV	DESCRIPTION	BY	DATE	CHK	APP
	SEE SHEET 1				

PPS I/O BOX TERMINAL LAYOUT TYPE 1

ROW 6					
TB16	END CLAMP 5	4-2 COVER LARGE 3	1>20 1	4-2 COVER SMALL 4	21 2
TB20	4-2 COVER LARGE 3	1>20 1	4-2 COVER SMALL 4	21 2	
TB22	4-2 COVER LARGE 3	1>20 1	4-2 COVER SMALL 4	21 2	
TB24	4-2 COVER LARGE 3	1>20 1	4-2 COVER SMALL 4	21 2	
TB26	4-2 COVER LARGE 3	1>5 1 / 6 7 / 7>15 1	4-2 COVER SMALL 4	21 2	
			USE BUSS JUMPER STRIPS 1>12 & 13>21		
SPACE FOR AUXILLARY DEVICE 1,A CHAIN		1.125"			
TB18	END CLAMP 5	4-2 COVER LARGE 3	1>6 1	4-2 COVER SMALL 4	END CLAMP 5
ROW 7 NOT INSTALLED					
TERMINALS					
FUSE 8	DDFL-4U	ALTECH			
FUSE PLATE 6	EPDDFL4U				
		PHOENIX CONTACT			
4 BUSSED 7	3044542	UT 2.5 QUATTRO	4 BUSSED		
4 BUSSED COVER 12	3047170				
1>15 1	3044636	UTTB 2.5	4 TERM 2 CONN		
	3047293				
4	3047303				
SINGLE 9	3044076		SINGLE		
SINGLE COVER 10	3047028				
GROUND 2	3044092				
END CLAMP 5	1201413				

1	3044636
2	3044092
3	3047293
4	3047303
5	1201413
6	EPDDFL4U
7	3044542
8	DDFL-4U
9	3044076
10	3047028
11	3047170

LT-EL-SR-EI-PPS-0228-90

LT-EL-SR-EI DRAWING DIRECTORY	LT-EL-SR-EI-PPS-0228-90 DRAWING NUMBER	K REV
COMPUTER REPRODUCIBLE	SCALE: N/A	SHEET 63 OF 63

The only official copy of this document is the one online in the NSLS-II SharePoint Document Center. Before using a printed copy, verify that it is current by checking the printed document's revision history with that of the online version.

Doc No: NSLSII-ESH-PRC-001

NSLS-II PROCEDURE: BEAMLINE RADIOLOGICAL INTERLOCK TEST

October 10, 2016

Rev. 1

T. McDonald

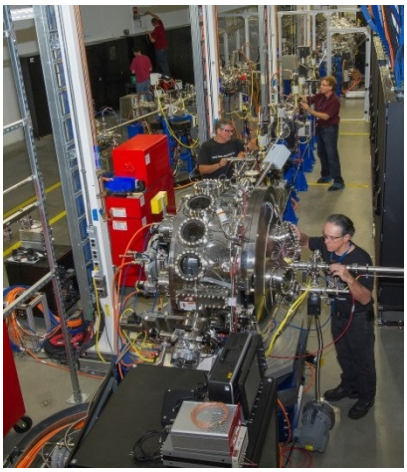

Think Safety. Act Safely.

The only official copy of this document is the one online in the NSLS-II SharePoint Document Center. Before using a printed copy, verify that it is current by checking the printed document's revision history with that of the online version.

National Synchrotron Light Source II, Brookhaven National Laboratory			
Doc No. **NSLSII-ESH-PRC-001**	Author: T. McDonald	Review Frequency: **3 yrs**	Rev. **1**
Title: **Beamline Radiological Interlock Test**			Effective Date: **10Oct2016**

ESH Review:

10/10/2016

X Robert Chmiel

Robert Chmiel
NSLS II Safety Officer
Signed by: Chmiel, Robert

By signing this Procedure I acknowledge that it complies with all ESH requirements and if performed correctly, will not present a significant hazard to personnel or equipment.

Authorization Basis Review:

10/11/2016

X

Steve Moss
Authorization Basis Manager
Signed by: Moss, Steven H

By signing this Procedure I acknowledge that a USI Screening/Evaluation has been performed and this Procedure does not adversely impact the NSLS-II Authorization Basis Documents.

Approved:

10/11/2016

X

Robert Lee
ESH Manager
Signed by: Lee, Robert J

By approving this Procedure I agree that the appropriate personnel have reviewed this document and I authorize this work to commence as written.

REVISION HISTORY

REVISION	SECTION(S)	PAGE #	DATE	List of Reviewers	DESCRIPTION
1	All	All	10Oct2016	J. Aloi. S. Buda, M. Benmerrouche, B. Lein, E. Orr, C. Porretto, F. Willeke, P. Zschack	First Issue. Procedure created to replace multiple procedures originally developed for each specific NSLS-II beamline. Beamline Radiological test checklists, formerly captured as "Attachment A" in individual test procedures, will now be saved as "Templates" in NSLS-II SharePoint Key Safety Records.

ACRONYMS

ABM	Authorization Basis Manager
ARM	Area Radiation Monitor
ASE	Accelerator Safety Envelope
BNL	Brookhaven National Laboratory
ESH	Environment, Safety and Health
FOE	First Optical Enclosure
HVPS	High Voltage Power Supply
LOTO	Lockout/Tagout
NSLS-II	National Synchrotron Light Source II
PPS	Personnel Protection System
PS	Power Supply
RF	Radio Frequency
SAF	Safety Approval Form
SBMS	Standards-Based Management System
SR	Storage Ring

1 PURPOSE AND SCOPE

The purpose of this procedure is to provide instructions for testing and certifying the radiological interlock system for all BNL NSLS-II Beamlines. Each beamline PPS system will be re-tested every six months, in accordance with SBMS Program Description: *Radiological Control Manual* and SBMS Subject Area, *Interlock Safety for High Risk Hazards*. Certification shall be completed sometime during, but no later than, the last day of the calendar month in which it is due. Any beamline PPS system going beyond the last day of the month in which it is due will be disabled by EHS Staff using Centrally Controlled LOTO until certification is complete. Testing will also be required after a change in wiring, components, or programming in accordance with PS-ESH-PRM-3.4.1, *Procedure for Safety System Work Permits* and the guidelines for certification specified in PS-C-ASD-SPC-SR-PPS-001, *Storage Ring Personnel Protection System (SPPS) Design Description, and* PS-C-XFD-SPC-PPS-001, *Beamline Personnel Protection System, (BLPPS) and Front End Personnel Protection System Design Description*. Changes to the system shall be performed in accordance with PS-C-ASD-PRC-057*, NSLS-II PPS Configuration Management*.

2 PREREQUISITES

2.1 At least one Tester shall be ESH Staff.

2.2 Assistants shall be designated by the Testers.

2.3 An NSLS-II Engineering Review has been completed for all hutch door switches to ensure proper positioning.

3 HAZARDS, CONTROLS AND LIMITS

3.1 All steps in this procedure that require LOTO of systems/equipment for servicing and maintenance activities shall be performed in accordance with SBMS Subject Area, *Lockout/Tagout (LOTO) for Installation, Demolition, or Service and Maintenance*.

3.2 All steps in this procedure that require LOTO for any purpose other than servicing and maintenance shall be performed in accordance with PS-C-ASD-PRC-005, *Centrally Controlled Lockout/Tagout (LOTO) Procedure*.

3.3 Mufflers shall be used to reduce noise during testing by placing them on the sounders.

3.4 The radiological interlock system for the beamline is a credited control in accordance with the ASE. Any deviation or discrepancy from an expected test result may be a violation of the ASE and shall be reported to the ABM as soon as practical.

3.5 All steps in the test checklist that require a beamline search shall be performed in accordance with PS-C-XFD-PRC-010, *Beamline Enclosure Search and Secure and Breaking Security Procedure.*

3.6 All configuration control checklists, commissioning approval forms, and SAFs for beamline's requiring venting vacuum shall be voided prior to the start of certification testing.

3.7 All steps in the test checklist requiring venting beamline vacuum shall be performed in accordance with PS-C-XFD-PRC-001, *Beamline Vacuum System Venting Procedure.*

3.8 All steps in the test checklist requiring testing of beamline FOE ARMs shall be performed in accordance with PS-C-ASD-PRC-008, *NSLS-II Area Radiation Monitor PPS Test*

4 PROCEDURE

4.1 Test and Certify Radiological Interlocks

Note: Two Testers are required to test and certify beamline radiological interlocks.

4.1.1 Testers notify the Lead Operator and Lead Beamline Scientist that a test of the Beamline radiological interlocks will be performed.

4.1.2 Testers obtain the Beamline enable key and Beamline PPS reset key from the Control Room.

Note: LOTO may be applied to other pieces of equipment such as: injection shutters, bending magnet power supplies, linac PPS enable switch, booster PPS enable switch or SR PPS enable switches that offer an equivalent amount of protection. Live testing will require the LOTO listed in 4.1.3 and 4.1.4.

4.1.3 Primary Authorized Employee applies LOTO to the following:

- Three linac modulator power supply line cords OR Booster Dipole F Power Supply in accordance with SBMS Subject Area, *Lockout/Tagout (LOTO) for Installation, Demolition, or Service and Maintenance*
- Booster RF HVPS OR Booster low level RF drive termination in accordance with PS-C-ASD-PRC-047, *NSLS-II Booster Ring Radio Frequency System High Voltage Power Supply (BR-HVPS) Lockout/Tagout (LOTO)*
- SR System "C" low level RF drive termination OR SR System "C" RF output connection to cavity in accordance with SBMS Subject Area, *Lockout/Tagout (LOTO) for Installation, Demolition, or Service and Maintenance*
- SR System "D" low level RF drive termination OR SR System "D" RF output connection to cavity in accordance with SBMS Subject Area, *Lockout/Tagout (LOTO) for Installation, Demolition, or Service and Maintenance*

4.1.4 Tester applies LOTO to each of the following in accordance with PS-C-ASD-PRC-005, *Centrally Controlled Lockout/Tagout (LOTO) Procedure*:

- Gun HVPS Enable switch
- Three linac modulator power supply line cords OR Booster Dipole F Power Supply
- Booster RF HVPS OR Booster low level RF drive termination
- SR System "C" low level RF drive termination OR SR System "C" RF output connection to cavity
- SR System "D" low level RF drive termination OR SR System "D" RF output connection to cavity

Note: With the exception of LOTO checklist items, checklist items (i.e., tests) specified in the specific *NSLS-II Beamline Radiological Interlock Test Checklists* may be performed without all of the specified checklist items (i.e., partial radiological interlock test).

Note: The most current version of the specific Beamline Radiological Interlock Checklists are maintained in the Key Safety Records section of the NSLS-II SharePoint Document Center, under the heading "PPS" (https://ps.bnl.gov/docs/Reference/Forms/KSRPPS.aspx).

4.1.5 Testers use the specific *NSLS-II Beamline Radiological Interlock Test Checklist* (example in Attachment A) AND certify the radiological interlocks.

a. IF the correct corresponding observation has been made, THEN make a checkmark (✓) for each step.

b. IF any step results in an undesired event or outcome, THEN contact the Accelerator Safety Systems Engineer and/or Technician.

c. IF the undesired outcome or event requires a change to wiring, components, or programming, THEN make a checkmark (✓) in the Test Result "Failed" box at the top of the checklist.

d. IF the checklist is fully completed with desirable outcomes, THEN make a checkmark (✓) in the Test Result "Passed" box at the top of the checklist.

4.1.6 Testers notify the Lead Operator that the test of the NSLS-II Beamline radiological interlocks is completed and the resulting outcome (i.e., Passed or Failed).

4.1.7 Testers remove LOTO from each of the following in accordance with PS-C-ASD-PRC-005, *Centrally Controlled Lockout/Tagout (LOTO) Procedure*:

- Gun HVPS Enable switch
- Three linac modulator power supply line cords OR Booster Dipole F Power Supply
- Booster RF HVPS OR Booster low level RF drive termination
- SR System "C" low level RF drive termination OR SR System "C" RF output connection to cavity
- SR System "D" low level RF drive termination OR SR System "D" RF output connection to cavity

4.1.8 Testers ensure all Beamline PPS cabinets are secure and locked.

4.1.9 Testers return the Beamline enable key and the Beamline PPS reset key to the Control Room.

4.1.10 Testers notify Primary Authorized Employees for each of the following systems that radiological interlock testing is complete AND removal of LOTO may be performed:

- Three linac modulator power supply line cords OR Booster Dipole F Power Supply
- Booster RF HVPS OR Booster low level RF drive termination
- SR System "C" low level RF drive termination OR SR System "C" RF output connection to cavity
- SR System "D" low level RF drive termination OR SR System "D" RF output connection to cavity

4.1.11 Testers provide the completed test checklist to the Configuration Management Specialist for posting on the NSLS-II SharePoint Document Center.

5 REFERENCES

5.1 PS-C-ASD-PRC-005, *Centrally Controlled Lockout/Tagout (LOTO) Procedure*

5.2 PS-C-ASD-PRC-008, *NSLS-II Area Radiation Monitor PPS Test*

5.3 PS-C-ASD-PRC-047, *NSLS-II Booster Ring Radio Frequency System High Voltage Power Supply (BR-HVPS) Lockout/Tagout (LOTO)*

5.4 PS-C-ASD-PRC-057*, NSLS-II PPS Configuration Management*

5.5 PS-ESH-PRM-3.4.1, *Procedure for Safety System Work Permits*

5.6 PS-C-XFD-PRC-010, *Beamline Enclosure Search and Secure and Breaking Security Procedure*

5.7 SBMS Program Description: *Radiological Control Manual*

5.8 SBMS Subject Area, *Interlock Safety for High Risk Hazards*

5.9 SBMS Subject Area, *Lockout/Tagout (LOTO) for Installation, Demolition, or Service and Maintenance*

5.10 PS-C-CMD-PRC-002, *Records Management Procedure*

5.11 PS-C-ASD-SPC-SR-PPS-001, *Storage Ring Personnel Protection System (SPPS) Design Description*

5.12 PS-C-XFD-PRC-001, *Beamline Vacuum System Venting Procedure*

5.13 PS-C-XFD-SPC-PPS-001, *Beamline Personnel Protection System, (BLPPS) and Front End Personnel Protection System Design Description*

6 ATTACHMENTS

Attachment A, *Example NSLS-II Beamline Radiological Interlock Test Checklist*

7 DOCUMENTATION

The following record is generated as a result of this procedure, and shall be maintained in accordance with PS-C-CMD-PRC-002, *Records Management Procedure*:

- Completed NSLS-II Beamline Radiological Interlock Test Checklists

8 DEFINITIONS

None.

If you have any questions or feedback regarding this document, please click this link.

The only official copy of this document is the one online in the NSLS-II SharePoint Document Center. Before using a printed copy, verify that it is current by checking the printed document's revision history with that of the online version.

Attachment A

EXAMPLE NSLS-II Beamline Radiological Interlock Test Checklist

Test Reason:	Test Result: ☐ Passed ☐ Failed		
	Test Type: ☐Pre-Certification	☐Certification	☐ Partial
Test Date:	Start Time:	Finish Time:	
Tester 1:	Assistant 1:		
Tester 2:	Assistant 2:		
Tester 1 Signature:	Tester 2 Signature:		
*Reviewer 1:	Reviewer 1 sig.:		
Reviewer 2:	Reviewer 2 sig.:		
** Safety Signature 17-BM (Beamline HMI) A Chain: B Chain:	Previous 17-BM SS# Date: / / A Chain: B Chain:		
** Safety Signature Pentant 5 Beamline (SR HMI) A Chain: B Chain:	Previous Pentant 5 SS# Date: / / A Chain: B Chain:		

* A review by an Accelerator Safety Systems Engineer and a designated specialist (Reviewer 2) is only required upon a Test failure.
**If Current Safety Signature number (found in top left corner on HMI) is different from previous number, contact the Accelerator Safety Systems Cognizant Engineer.

PREPARATION:

I. All hutch door switches have been evaluated by NSLS-II Engineering for proper positioning	
II. Inform Control Room Lead Operator that testing will be done	
III. Obtain Beamline enable and PPS reset keys from Control Room	
IV. Verify that beamline vacuum and water interlocks are satisfied	
V. Place muffler on beam imminent sounder	
VI. Request Lead Operator enable Master shutters	

A1 ***Verify System Lockouts***

Gun HVPS output cable connector ____

Linac modulator line cords (3) OR Booster Dipole F PS 480 V ____

Booster RF HVPS 480 V OR Booster low level RF drive termination ____

SR System C low level RF drive termination OR SR System C RF output connection to cavity ____

SR System D low level RF drive termination OR SR System D RF output connection to cavity ____

A2 ***Verify Search and Time Beam Imminent Alarm***

Verify that search path is free from obstacles and line of sight is clear in search mirrors in accordance with PS-C-XFD-PRC-010, *Beamline Enclosure Search and Secure and Breaking Security Procedure* ____

	A
Close the Right door	____
"Entry Permitted" sign is ON	____
Using the keypad, lock the closed doors	____
Press SB1	____
SB1 illuminates	____
Search sounder sounds	____
Search yellow beacon flashing	____
Press SB2	____
SB2 illuminates	____
Exit hutch and close main door	____
*Press SBE and **begin timing***	____
Beam imminent alarm sounds for 30 seconds	____
After warning, (FOE Interlocked A and B ON (**green**), HMI	____
"Interlocked" sign is ON	____
Maglock A and B ON, HMI	____
Press the SBE/Access Button	____
Interlocked sign OFF, "Entry Permitted" sign is ON	____
FOE Interlocked A and B OFF, HMI	____
Maglock A OFF (may require opening Maglock on key pad)	____
Open door	____
Door opens, Maglock B OFF door	____

A3 ***Out of Sequence Search in the FOE (A hutch)***

	A
Press SB2	____
SB2 does not illuminate	____
Press SB1	____

SB1 illuminates ____

Close hutch door and press SBE ____

Hutch does NOT secure ____

A4 ***Search timeout***

	A
Press first search button and ***begin timing***	____
Complete search ***without pressing Final Search button***	____
Search sounders off in 2 minutes	____
Press Final Search button	____
Search does not complete	____

A5 ***Shutter enable***

Place actuators on FOE door switches and attach Maglock devices		____
	Beamline Online A and B OFF	____
Enable beamline with key and perform a reset	Beamline Online A and B ON (**green**)	____
Search the FOE	FE Shutter Permits A and B ON ***after*** Beam Imminent Warning	____
Open FE shutters	FE Shutters A and B indicate open (**green**)	____
	"Beam On" sign is ON	____
Close FE shutters	FE Shutters A and B indicate closed (**red**)	____

A6 ***Emergency Stops (ES) FOE (A hutch)***

For each ES search hutch	**ES1**	**ES2**	**ES3**
Open FE Shutters from keypad	____	____	____
FE Shutters A and B open (**green**)	____	____	____
FOE Interlocked A and B ON (**green**)	____	____	____
FE Shutter Permit A and B ON (**green**)	____	____	____
FE Critical Device Permits A and B ON	____	____	____
Right Maglock A ON (**green**)	____	____	____
Left Maglock A ON (**green**)	____	____	____
Press ES	____	____	____
FE Shutters A and B closed (**red**)	____	____	____
FOE Interlocked A and B OFF	____	____	____

FE Shutter Permit A and B OFF	____	____	____
FE Critical Device Permits A and B OFF	____	____	____
Right Maglock A OFF	____	____	____
Left Maglock A OFF	____	____	____
Pull out ES	____	____	____
ES Sum Latch OFF	____	____	____
Reset fault	____	____	____
ES Sum Latch ON (**green**)	____	____	____

A7 ***FOE Labyrinth 1 Switches and Latches***

Place actuators on the labyrinth switches/latches and downstream left door switches and Maglock. ____

Check the corresponding Permits for each switch tested (e.g., A Permit for switch A1).

	A	**B**	**Latch**
Search hutch	____	____	____
Open FE Shutters from keypad	____	____	____
FE Shutters A and B open (**green**)	____	____	____
FOE Interlocked A and B ON (**green**)	____	____	____
FE Shutter Permit A and B ON (**green**)	____	____	____
Cable Lab 1 Switches/Latch ON (**green**)	____	____	____
FE Critical Device Permits A and B ON	____	____	____
Remove one switch actuator	____	____	____
FE Shutters A and B closed (**red**)	____	____	____
FOE Interlocked OFF	____	____	____
FE Shutter Permit OFF	____	____	____
Cable Lab 1 Switch/Latch Permit OFF	____	____	____
FE Critical Device Permits A and B OFF	____	____	____
Replace switch actuator and reset fault	____	____	____
Remove labyrinth actuators and close labyrinth door			____

A8 ***FOE Right Door Switches***

Place actuators on the door switches and Maglock. ____

Check the corresponding Permits for each switch tested (e.g., A Permit for switch A1).

	A	B	Reed
Search hutch	____	____	____
Open FE Shutters from keypad	____	____	____
FE Shutters A and B open (**green**)	____	____	____
FOE Interlocked A and B ON (**green**)	____	____	____
FE Shutter Permit A and B ON (**green**)	____	____	____
FOE Door Switch Sum A and B ON (**green**)	____	____	____
FE Critical Device Permits A and B ON	____	____	____
Remove one switch actuator	____	____	____
FE Shutters A and B closed (**red**)	____	____	____
FOE Interlocked OFF	____	____	____
FE Shutter Permit OFF	____	____	____
FOE Door Switch Sum OFF	____	____	____
FE Critical Device Permits A and B OFF	____	____	____
Replace switch actuator and reset fault	____	____	____
Remove actuators and close door			____

A9 ***FOE Left Door Switches***

Place actuators on the door switches and Maglock. ____

Check the corresponding Permits for each switch tested (e.g., A Permit for switch A1).

	A	B	Reed
Search hutch	____	____	____
Open FE Shutters from keypad	____	____	____
FE Shutters A and B open (**green**)	____	____	____
FOE Interlocked A and B ON (**green**)	____	____	____
FE Shutter Permit A and B ON (**green**)	____	____	____
FOE Door Switch Sum A and B ON (**green**)	____	____	____
FE Critical Device Permits A and B ON	____	____	____
Remove one switch actuator	____	____	____

FE Shutters A and B closed (**red**) ____ ____ ____

FOE Interlocked OFF ____ ____ ____

FE Shutter Permit OFF ____ ____ ____

FOE Door Switch Sum OFF ____ ____ ____

FE Critical Device Permits A and B OFF ____ ____ ____

Replace switch actuator and reset fault ____ ____ ____

Remove actuators and close door ____

A10 ***Magnetic Lock Test (FOE)***

Connect the FOE test box (Attachment B Figure B4) to the PPS cabinet (Attachment B Figure B7). Use the box to turn ON the Maglocks (set switches to "Normal"). ____

Repeat steps for each door: Right (R), Left (L)

	R	**L**
Search hutch	____	____
FOE Interlocked A and B ON (**green**)	____	____
FE Shutter Permit A and B ON (**green**)	____	____
Door Maglock A and B ON (**green**)	____	____
Open FE Shutters	____	____
FE Shutters open (**green**)	____	____
Using FOE test box, turn OFF Maglock	____	____
Door Maglock A OFF	____	____
FE Shutters closed (**red**)	____	____
FOE Interlocked A OFF	____	____
FE Shutter Permit A OFF	____	____
Turn On Maglock and reset fault	____	____
Search hutch	____	____
Using FE Shutter test fixture, Open FE Shutters	____	____
FE Crtical Device Permits A and B ON	____	____
Using FOE test box, turn OFF Maglock	____	____
Within 3 seconds: FE Critical Devices Permits A Chain OFF	____	____

Disconnect the FOE test box and reset fault ____

A11 ***Observe FE Safety Shutter(s) Operation***

With Maintenance Door open, connect FE Shutter test fixture (Attachment B Figure B5). ____

		Shutters are in the closed (down) position	____
		FE Shutter Closed A and B (**red**), HMI	____
	Turn the "Air" switch ON		____
	Open FE Photon Shutter and SSs A and B	Shutters open freely without hesitation	____
		Shutters are in the open (up) position	____
		FE Shutter Open A and B (**green**), HMI	____
	Actuate Shutters closed	FE Shutter Closed A and B (**red**), HMI	____
A12	***FE Safety Shutters can only be Closed if FE Photon Shutter is Closed***		
	Search hutch	FOE Interlocked A and B ON (**green**), HMI	____
		FE Critical Devices Permits A and B ON (**green**), HMI	____
	Open FE SSA	SSA Open	____
	Open FE Photon Shutter	FE Critical Devices Permits A and B OFF, HMI	____
	Close Shutters		____
	Reset fault	FE Critical Devices Permits A and B ON (**green**), HMI	____
	Open FE SSB	SSB Open	____
	Open FE Photon Shutter	FE Critical Devices Permits A and B OFF, HMI	____
	Close Shutters		____
	Reset fault	FE Critical Devices Permits A and B ON (**green**), HMI	____
A13	***Beamline Enable Key (Opening shutter without key trips SR RF and Dipole PS)***		
	Remove beamline enable key	Beamline Online A and B OFF	____
	Search FOE	FOE Interlocked A and B ON (**green**), HMI	____
		FE Critical Devices Permits A and B ON (**green**), HMI	____
	Using FE Shutter test fixture, Open FE Shutters	FE Critical Devices Permits A and B OFF	____
	Replace beamline enable key and reset faults	Beamline Online A and B ON (**green**)	____
	Live Testing		
A14	***Reach Back FOE Door Switches***		
	Secure P1 through P5	SR Secure, A and B chain, SR HMI	____

Place actuators on FOE hutch downstream left door switches and Maglock		____
Search hutch	FOE Interlocked A and B ON (**green**), HMI	____
	FE Critical Devices Permits A and B ON (**green**), HMI	____
Check Control Room SR HMI (MCR beamline 1)	FE Critical Device Permit A and B ON (**green**), SR HMI	____
Check I/O Box 17 Beamline Enable Panel	FE Critical Devices Permits A and B LEDs ON	____
Check I/O Box 28 Beamline Enable Panel	FE Critical Device Permit Sum A and B LEDs ON	____
	FE Shutters Closed A and B LEDs ON	____
Check Dipole PS (positive) Beamline Interface	A and B Permits ON, Dipole PS Pos. Interface	____
Check Dipole PS (negative) Beamline Interface	A and B Permits ON, Dipole PS Neg. Interface	____
Check SR RF System C HVPS Beamline Interface	A and B Permits ON, SR RF System C HVPS Interface	____
Check SR RF System D HVPS Beamline Interface	A and B Permits ON, SR RF System D HVPS Interface	____
Operator enables SR Dipole PS	SR Dipole PS is ON	____
Operator enables SR RF System C HVPS	SR RF System C HVPS is ON	____
Operator enables SR RF System D HVPS	SR RF System D HVPS is ON	____
Using FE Shutter test fixture, open the FE Shutters (SSA, SSB and Photon)		____
	FE Shutters Open	____
*Remove an "**A chain**" door switch actuator from beamline hutch door*		____
	FOE Interlocked OFF A, HMI	____
	FE Critical Devices Permits A chain OFF, HMI	____
Check I/O Box 17 Beamline Enable Panel	FE Critical Devices Permit A LED OFF	____
Check I/O Box 28 Beamline Enable Panel	FE Critical Device Permit Sum A LED OFF	____
Check Control Room SR HMI (MCR beamline 1)	FE Critical Device Permit A (**red**), SR HMI	____
Check SR RF System C HVPS Beamline Interface	A Permits OFF, SR RF System C HVPS Interface	____
Check SR RF System D HVPS Beamline Interface	A Permits OFF, SR RF System D HVPS Interface	____
Check Dipole PS (positive) Beamline Interface	A Permits OFF, Dipole PS Pos. Interface	____
Check Dipole PS (negative) Beamline Interface	A Permits OFF, Dipole PS Neg. Interface	____
	SR RF System C HVPS is OFF	____
	SR RF System D HVPS is OFF	____
	SR Dipole PS is OFF	____
Close Shutters	Shutters closed	____

Replace A chain door switch holder and reset fault(s)		____
Search hutch		____
	FOE Interlocked A and B ON (**green**), HMI	____
	FE Critical Devices Permits A and B ON (**green**), HMI	____
Check Control Room SR HMI (MCR beamline 1)	FE Critical Device Permit A and B ON (**green**), SR HMI	____
Check I/O Box 17 Beamline Enable Panel	FE Critical Device Permit Sum A and B LEDs ON	____
Check I/O Box 28 Beamline Enable Panel	FE Shutters Closed A and B LEDs ON	____
Check Dipole PS (positive) Beamline Interface	A and B Permits ON, Dipole PS Pos. Interface	____
Check Dipole PS (negative) Beamline Interface	A and B Permits ON, Dipole PS Neg. Interface	____
Check SR RF System C HVPS Beamline Interface	A and B Permits ON, SR RF System C HVPS Interface	____
Check SR RF System D HVPS Beamline Interface	A and B Permits ON, SR RF System D HVPS Interface	____
Operator enables SR Dipole PS	SR Dipole PS is ON	____
Operator enables SR RF System C HVPS	SR RF System C HVPS is ON	____
Operator enables SR RF System D HVPS	SR RF System D HVPS is ON	____
Using FE Shutter test fixture, open the FE Shutters (SSA, SSB and Photon)		____
	FE Shutters Open	____
Remove "**B chain**" switch actuator	FOE Interlocked B OFF, HMI	____
	FE Critical Devices Permits B OFF, HMI	____
Check I/O Box 17 Beamline Enable Panel	FE Critical Devices Permit B LED OFF	____
Check Control Room SR HMI (MCR beamline 1)	FE Critical Device Permits B OFF (**red**), SR HMI	____
Check I/O Box 28 Beamline Enable Panel	FE Critical Device Permit Sum B LED OFF	____
Check SR RF System C HVPS Beamline Interface	B Permits OFF, SR RF System C HVPS Interface	____
Check SR RF System D HVPS Beamline Interface	B Permits OFF, SR RF System D HVPS Interface	____
Check Dipole PS (positive) Beamline Interface	B Permits OFF, Dipole PS Pos. Interface	____
Check Dipole PS (negative) Beamline Interface	B Permits OFF, Dipole PS Neg. Interface	____
	SR Dipole is OFF	____
	SR RF System C HVPS is OFF	____
	SR RF System D HVPS is OFF	____
Close FE Shutters with test fixture		

Remove hutch switch holders and Maglock actuator ____

A15 ***Observe All Shutters Closed Sum***

Check I/O Box 28 Beamline Enable Panel FE Shutters closed A chain light ON ____

FE Shutters closed B chain light ON ____

Using FE Shutter test fixture open both FE SSs and then Photon Shutter ____

FE Shutters open (**green**), HMI ____

Check I/O Box 28 Beamline Enable Panel FE Shutters closed A chain light OFF ____

FE Shutters closed B chain light OFF ____

Close Shutters and remove test device ____

A16 ***Test Completion***

Inspect all hutch doors and labyrinths to ensure all PPS switch and Maglock actuators have been removed ____

Return Beamline enable key and Beamline PPS reset key to the Control Room ____

Remove muffler from beam imminent sounder ____

Ensure PPS cabinets are secure and locked; challenge locks ____

Remove all LOTO ____

Inform Lead Operator that testing is complete ____

- END -

The only official copy of this document is the one online in the NSLS-II Document and Records Center. Before using a printed copy, verify that it is current by checking the printed document's revision history log with that of the online version.

NSLS-II Beamline 28-ID Radiological Interlock Test Checklist

Test Reason: Addition of 'B' hutch	Test Result: ☑ Passed ☐ Failed Test Type: ☐ Pre-Certification ☑ Certification ☐ Partial
Test Date: 1/6/2018	Start Time: Finish Time:
Tester 1: Thomas McDonald; Brian Hanewald	Assistant 1: Accelerator Operations Staff
Tester 2: Robert Chmiel; Gabrielle Stone	Assistant 2:
Tester 1 Signature: Thomas O. McDonald	Tester 2 Signature: R Chmiel
*Reviewer 1:	Reviewer 1 Signature:
Reviewer 2:	Reviewer 2 Signature:
** Safety Signature 28-ID (Beamline HMI) A Chain: AE66241C B Chain: 5E6E2AFA	Previous 28-ID SS# Date: 1/3/2017 A Chain: 2C62 7C0F B Chain: 94F3 1E98
** Safety Signature Pentant 1 Beamline (SR HMI) A Chain: FC81 FD92 B Chain: 2F26 A0F3	Previous Pentant 1 SS# Date: 1/3/2017 A Chain: FC81 FD92 B Chain: 2F26 A0F8

* A review by an Accelerator Safety Systems Engineer and a designated specialist (Reviewer 2) is only required upon a Test failure.
**If Current Safety Signature number (found in top left corner on HMI) is different from previous number, contact the Accelerator Safety Systems Cognizant Engineer.

PREPARATION:

I. All hutch door switches have been evaluated by NSLS-II Engineering for proper positioning	✓
II. Inform Control Room Lead Operator that testing will be done	✓
III. Obtain Beamline enable and PPS reset keys from Control Room	✓
IV. Verify that beamline vacuum and water interlocks are satisfied	✓
V. Place muffler on beam imminent sounder	✓
VI. Request Lead Operator enable Master Shutters	✓

A1 ***Verify System Lockouts***

Gun HVPS Enable Switch ✓

Linac modulator line cords (3) OR Booster Dipole F PS 480 V ✓

Booster RF HVPS 480 V OR Booster low level RF drive termination ✓

SR System C low level RF drive termination OR SR System C RF output connection to cavity ✓

SR System D low level RF drive termination OR SR System D RF output connection to cavity ✓

A2 ***Verify Search and Time Beam Imminent Alarm***

Verify that search path is free from obstacles and line of sight is clear in search mirrors in accordance with PS-C-XFD-PRC-010, *Beamline Enclosure Search and Secure and Breaking Security Procedure* ✓

Repeat steps for each 28-ID hutch.	A	B	C	D
Close all hutch secondary doors	✓	✓	✓	✓
"Entry Permitted" signs are ON (A, C and D have 2 signs, B has 1)	✓	✓	✓	✓
Using the keypad, lock the closed doors	✓	✓	✓	✓
Press SB1	✓	✓	✓	✓
SB1 illuminates	✓	✓	✓	✓
Search sounder sounds	✓	✓	✓	✓
Search yellow beacon flashing	✓	✓	✓	✓
Press SB2	✓	✓	✓	✓
SB2 illuminates	✓	✓	✓	✓
For the "A" hutch, press SB3	✓			
SB3 illuminates	✓			
Exit hutch and close downstream left door (right front door for the D hutch)	✓	✓	✓	✓
Press SBE and ***begin timing***	✓	✓	✓	✓
Beam imminent alarm sounds for 30 seconds	✓	✓	✓	✓
After warning, (FOE, B, C, D) Interlocked A and B ON (**green**), HMI	✓	✓	✓	✓
"Interlocked" signs are ON (A-2, B-1, C-2, D-2)	✓	✓	✓	✓
Maglock A and B ON (**green**), all doors, HMI	✓	✓	✓	✓
Press the SBE/Access Button	✓	✓	✓	✓
"Interlocked" signs are OFF (A-2, B-1, C-2 , D-2), "Entry Permitted" signs are ON (A-2, B-1, C-2, D-2)	✓	✓	✓	✓
FOE, B, C, D Interlocked A and B OFF, HMI	✓	✓	✓	✓
Maglock A OFF (may require opening Maglock on keypad)	✓	✓	✓	✓
Open door	✓	✓	✓	✓
Door opens, Maglock B OFF	✓	✓	✓	✓

A3 ***Out of Sequence Search***

Repeat steps for each 28-ID hutch.	A	B	C	D
Press SB2	✓	✓	✓	✓
SB2 does not illuminate	✓	✓	✓	✓

On hutch A Press SB3	✓			
SB3 does not illuminate	✓			
Press SB1	✓	✓	✓	✓
SB1 illuminates	✓	✓	✓	✓
Close hutch door and press SBE	✓	✓	✓	✓
Hutch does NOT secure	✓	✓	✓	✓

A4 ***Search Timeout***

Repeat steps for each 28-ID hutch.	A	B	C	D
Press SB1 and ***begin timing***	✓	✓	✓	✓
Complete search ***without pressing SBE***	✓	✓	✓	✓
Search sounders off in 2 minutes	✓	✓	✓	✓
Press SBE	✓	✓	✓	✓
Search does not complete	✓	✓	✓	✓

A5 ***Shutter Enable***

Place actuators on FOE door switches and attach Maglock devices.		✓
	Beamline Online A and B OFF	✓
Enable beamline with key and perform a reset	Beamline Online A and B ON (**green**)	✓
Search the FOE	FE Shutter Permits A and B ON ***after*** Beam	✓
	Imminent Warning	✓
Open FE Shutters	FE Shutters A and B indicate open (**green**)	✓
	2 "Beam On" signs are ON	✓
Close FE Shutters	FE Shutters A and B indicate closed (**red**)	✓
	2 "Beam On" signs are OFF	✓
Search the B and C hutches with Guillotine shutter closed. Beamline branch keys not in place		✓
	B Interlocked A and B ON (**green**)	✓
	C Interlocked A and B ON (**green**)	✓
	L1S1 Shutter Permit A and B OFF	✓
Attempt to Open L1S1 from keypad	L1S1 Shutter A and B closed (**red**)	✓
Cycle Line 1 Beamline key in place	L1S1 Shutter Permit A and B ON (**green**)	✓
Open L1S1 Shutter from keypad	L1S1 Shutter A and B open (**green**)	✓

Cycle Line 1 Beamline key out of place	L1S1 Shutter A and B closed (**red**)	✓
	L1S1 Shutter Permit A and B OFF	✓
	L2S2 Shutter Permit A and B OFF	✓
Attempt to Open L2S2 Shutter from keypad	L2S2 Shutter A and B closed (**red**)	✓
Cycle Line 2 Beamline key in place	L2S2 Shutter Permit A and B ON (**green**)	✓
Open L2S2 Shutter from keypad	L2S2 Shutter A and B open (**green**)	✓
Cycle Line 2 Beamline key out of place	L2S2 Shutter A and B closed (**red**)	✓
	L2S2 Shutter Permit A and B OFF	✓
Rotate keys in place to enable both lines	L1S1 and L2S2 Shutter Permits A and B ON (**green**)	✓

A6 ***Emergency Stops (ES) FOE (A Hutch)***

For each ES search hutch.	ES1	ES2	ES3	ES4
Open FE Shutters from keypad	✓	✓	✓	✓
FE Shutters A and B open (**green**)	✓	✓	✓	✓
FOE Interlocked A and B ON (**green**)	✓	✓	✓	✓
FE Shutter Permit A and B ON (**green**)	✓	✓	✓	✓
FE Critical Device Permits A and B ON	✓	✓	✓	✓
Upstream Right Maglock A and B ON	✓	✓	✓	✓
Upstream Left Maglock A and B ON	✓	✓	✓	✓
Downstream Right Maglock A and B ON	✓	✓	✓	✓
Downstream Left Maglock A and B ON	✓	✓	✓	✓
Press ES	✓	✓	✓	✓
FE Shutters A and B closed (**red**)	✓	✓	✓	✓
FOE Interlocked A and B OFF	✓	✓	✓	✓
FE Shutter Permit A and B OFF	✓	✓	✓	✓
FE Critical Device Permits A and B OFF	✓	✓	✓	✓
Upstream Right Maglock A OFF	✓	✓	✓	✓
Upstream Left Maglock A OFF	✓	✓	✓	✓
Downstream Right Maglock A OFF	✓	✓	✓	✓
Downstream Left Maglock A OFF	✓	✓	✓	✓
Pull out ES	✓	✓	✓	✓
ES Sum Latch OFF	✓	✓	✓	✓
Reset fault	✓	✓	✓	✓
ES Sum Latch ON (**green**)	✓	✓	✓	✓

A7 ***Emergency Stops (ES) B Hutch***

For each ES search hutch.	ES1	ES2	ES3
Open FE Shutters and L1S1 Shutter from keypad	✓	✓	✓
FE and L1S1 Shutters A and B open (**green**)	✓	✓	✓
B Interlocked A and B ON (**green**)	✓	✓	✓
L1S1 Shutter Permit A and B ON (**green**)	✓	✓	✓
FE Critical Device Permits A and B ON	✓	✓	✓
Front Right Maglock A and B ON (**green**)	✓	✓	✓
Press ES	✓	✓	✓
L1S1 Shutter A and B closed (**red**)	✓	✓	✓
B Interlocked A and B OFF	✓	✓	✓
L1S1 Shutter Permit A and B OFF	✓	✓	✓
FE Critical Device Permits A and B OFF	✓	✓	✓
Front Right Maglock A OFF	✓	✓	✓
Pull out ES	✓	✓	✓
ES Sum Latch OFF	✓	✓	✓
Reset fault	✓	✓	✓
ES Sum Latch ON (**green**)	✓	✓	✓

A8 ***Emergency Stops (ES) C Hutch***

For each ES search hutch.	ES1	ES2	ES3	ES4
Open FE Shutters and L2S2 Shutter from keypad	✓	✓	✓	✓
FE and L2S2 Shutters A and B open (**green**)	✓	✓	✓	✓
C Interlocked A and B ON (**green**)	✓	✓	✓	✓
L2S2 Shutter Permit A and B ON (**green**)	✓	✓	✓	✓
FE Critical Device Permits A and B ON	✓	✓	✓	✓
Front Right Maglock A and B ON (**green**)	✓	✓	✓	✓
Front Left Maglock A and B ON (**green**)	✓	✓	✓	✓
Rear Maglock A and B ON (**green**)	✓	✓	✓	✓
Press ES	✓	✓	✓	✓
L2S2 Shutter A and B closed (**red**)	✓	✓	✓	✓
C Interlocked A and B OFF	✓	✓	✓	✓

The only official copy of this document is the one online in the NSLS-II Document and Records Center. Before using a printed copy, verify that it is current by checking the printed document's revision history log with that of the online version.

L2S2 Shutter Permit A and B OFF	✓	✓	✓	✓
FE Critical Device Permits A and B OFF	✓	✓	✓	✓
Front Right Maglock A OFF	✓	✓	✓	✓
Front Left Maglock A OFF	✓	✓	✓	✓
Rear Maglock A OFF	✓	✓	✓	✓
Pull out ES	✓	✓	✓	✓
ES Sum Latch OFF	✓	✓	✓	✓
Reset fault	✓	✓	✓	✓
ES Sum Latch ON (**green**)	✓	✓	✓	✓

A9 ***Emergency Stops (ES) D Hutch***

Manually open the Guillotine Shutter in the C hutch.

For each ES search hutch.	**ES1**	**ES2**	**ES3**	**ES4**
Open FE Shutters and L2S2 Shutter from keypad	✓	✓	✓	✓
FE and L2S2 Shutters A and B open (**green**)	✓	✓	✓	✓
D Interlocked A and B ON (**green**)	✓	✓	✓	✓
L2S2 Shutter Permit A and B ON (**green**)	✓	✓	✓	✓
FE Critical Device Permits A and B ON	✓	✓	✓	✓
Front Right Maglock A and B ON (**green**)	✓	✓	✓	✓
Front Left Maglock A and B ON (**green**)	✓	✓	✓	✓
Rear Right Maglock A and B ON (**green**)	✓	✓	✓	✓
Rear Left Maglock A and B ON (**green**)	✓	✓	✓	✓
Press ES	✓	✓	✓	✓
L2S2 Shutter A and B closed (**red**)	✓	✓	✓	✓
D Interlocked A and B OFF	✓	✓	✓	✓
L2S2 Shutter Permit A and B OFF	✓	✓	✓	✓
FE Critical Device Permits A and B OFF	✓	✓	✓	✓
Front Right Maglock A OFF	✓	✓	✓	✓
Front Left Maglock A OFF	✓	✓	✓	✓
Rear Right Maglock A OFF	✓	✓	✓	✓
Rear Left Maglock A OFF	✓	✓	✓	✓

Pull out ES	✓	✓	✓	✓
ES Sum Latch OFF	✓	✓	✓	✓
Reset fault	✓	✓	✓	✓
ES Sum Latch ON (**green**)	✓	✓	✓	✓

A10 ***FOE Labyrinth 2 Switches and Latch***

Place actuators on the labyrinth switches/latches and downstream left door switches and Maglock. ✓

Check the corresponding Permits for each switch tested (e.g., A Permit for switch A1). Latch trips on both A and B Permits. **Note**: B chain reed and push button switches must be cycled together for reset.

	A1	A2	B1	B2	Latch
Search hutch	✓	✓	✓	✓	✓
Open FE Shutters from keypad	✓	✓	✓	✓	✓
FE Shutters A and B open (**green**)	✓	✓	✓	✓	✓
FOE Interlocked A and B ON (**green**)	✓	✓	✓	✓	✓
FE Shutter Permit A and B ON (**green**)	✓	✓	✓	✓	✓
Cable Lab 2 Switches/Latch A and B ON (**green**)	✓	✓	✓	✓	✓
FE Critical Device Permits A and B ON	✓	✓	✓	✓	✓
Remove one switch actuator	✓	✓	✓	✓	✓
Cable Lab 2 Switch/Latch Permit OFF	✓	✓	✓	✓	✓
FOE Interlocked OFF	✓	✓	✓	✓	✓
FE Shutter Permit OFF	✓	✓	✓	✓	✓
FE Shutters A and B closed (**red**)	✓	✓	✓	✓	✓
FE Critical Device Permits A and B OFF	✓	✓	✓	✓	✓
Replace switch actuator and reset fault	✓	✓	✓	✓	✓
Remove labyrinth actuators and close labyrinth door					✓

A11 ***Hutch B Labyrinth 1 Switches and Latch***

Place actuators on the labyrinth switches/latches and downstream left door switches and Maglock. ✓

Check the corresponding Permits for each switch tested (e.g., A Permit for switch A1). Latch trips on both A and B Permits. **Note**: B chain reed and push button switches must be cycled together for reset.

	A1	A2	B1	B2	Latch
Search hutch	✓	✓	✓	✓	✓

Open FE Shutters and L1S1 Shutter from keypad	✓	✓	✓	✓	✓
FE and LIS1 Shutters A and B open (**green**)	✓	✓	✓	✓	✓
B Interlocked A and B ON (**green**)	✓	✓	✓	✓	✓
L1S1 Shutter Permit A and B ON (**green**)	✓	✓	✓	✓	✓
Cable Lab 1 Switches/Latch A and B ON (**green**)	✓	✓	✓	✓	✓
FE Critical Device Permits A and B ON	✓	✓	✓	✓	✓
Remove one switch actuator	✓	✓	✓	✓	✓
Cable Lab 1 Switch/Latch Permit OFF	✓	✓	✓	✓	✓
B Interlocked OFF	✓	✓	✓	✓	✓
L1S1 Shutter Permit OFF	✓	✓	✓	✓	✓
L1S1 Shutter A and B closed (**red**)	✓	✓	✓	✓	✓
FE Critical Device Permits A and B OFF	✓	✓	✓	✓	✓
Replace switch actuator and reset fault	✓	✓	✓	✓	✓
Remove labyrinth actuators and close labyrinth door					✓

A12 ***Hutch C Labyrinth 1 Switches and Latch***

Place actuators on the labyrinth switches/latches and downstream left door switches and Maglock. ✓

Check the corresponding Permits for each switch tested (e.g., A Permit for switch A1). Latch trips on both A and B Permits. **Note**: B chain reed and push button switches must be cycled together for reset.

	A1	A2	B1	B2	Latch
Search hutch	✓	✓	✓	✓	✓
Open FE Shutters and L2S2 Shutter from keypad	✓	✓	✓	✓	✓
FE and L2S2 Shutters A and B open (**green**)	✓	✓	✓	✓	✓
C Interlocked A and B ON (**green**)	✓	✓	✓	✓	✓
L2S2 Shutter Permit A and B ON (**green**)	✓	✓	✓	✓	✓
Cable Lab 1 Switches/Latch A and B ON (**green**)	✓	✓	✓	✓	✓
FE Critical Device Permits A and B ON	✓	✓	✓	✓	✓
Remove one switch actuator	✓	✓	✓	✓	✓
Cable Lab 1 Switch/Latch Permit OFF	✓	✓	✓	✓	✓
C Interlocked OFF	✓	✓	✓	✓	✓
L2S2 Shutter Permit OFF	✓	✓	✓	✓	✓
L2S2 Shutter A and B closed (**red**)	✓	✓	✓	✓	✓
FE Critical Device Permits A and B OFF	✓	✓	✓	✓	✓

Replace switch actuator and reset fault	✓	✓	✓	✓	✓
Remove labyrinth actuators and close labyrinth door					✓

A13 ***Hutch C Labyrinth 2 Switches and Latch*** ✓

Place actuators on the labyrinth switches/latches and downstream left door switches and Maglock.

Check the corresponding Permits for each switch tested (e.g., A Permit for switch A1). Latch trips on both A and B Permits. **Note**: B chain reed and push button switches must be cycled together for reset.

	A1	A2	B1	B2	Latch
Search hutch	✓	✓	✓	✓	✓
Open FE Shutters and L2S2 Shutter from keypad	✓	✓	✓	✓	✓
FE and L2S2 Shutters A and B open (**green**)	✓	✓	✓	✓	✓
C Interlocked A and B ON (**green**)	✓	✓	✓	✓	✓
L2S2 Shutter Permit A and B ON (**green**)	✓	✓	✓	✓	✓
Cable Lab 2 Switches/Latch A and B ON (**green**)	✓	✓	✓	✓	✓
FE Critical Device Permits A and B ON	✓	✓	✓	✓	✓
Remove one switch actuator	✓	✓	✓	✓	✓
Cable Lab 2 Switch/Latch Permit OFF	✓	✓	✓	✓	✓
C Interlocked OFF	✓	✓	✓	✓	✓
L2S2 Shutter Permit OFF	✓	✓	✓	✓	✓
L2S2 Shutter A and B closed (**red**)	✓	✓	✓	✓	✓
FE Critical Device Permits A and B OFF	✓	✓	✓	✓	✓
Replace switch actuator and reset fault	✓	✓	✓	✓	✓
Remove labyrinth actuators and close labyrinth door					✓

A14 ***Guillotine Shutter Switches and Latch*** ✓

Place actuators on the Guillotine Shutter switches/latch and downstream left door switches and Maglock.

Check the corresponding Permits for each switch tested (e.g., A Permit for switch A1). Latch trips on both A and B Permits. **Note**: B chain reed and push button switches must be cycled together for reset.

	A1	A2	B1	B2	Latch
Search hutch	✓	✓	✓	✓	✓
Open FE Shutters and L2S2 Shutter from keypad	✓	✓	✓	✓	✓
FE and L2S2 Shutters A and B open (**green**)	✓	✓	✓	✓	✓

The only official copy of this document is the one online in the NSLS-II Document and Records Center. Before using a printed copy, verify that it is current by checking the printed document's revision history log with that of the online version.

L2S2 Shutter Permit A and B ON (**green**)	✓	✓	✓	✓	✓
Guillotine Switches/Latch A and B closed (**red**)	✓	✓	✓	✓	✓
FE Critical Device Permits A and B ON	✓	✓	✓	✓	✓
Remove one switch actuator	✓	✓	✓	✓	✓
Guillotine Switch/Latch open (not red)	✓	✓	✓	✓	✓
L2S2 Shutter Permit OFF	✓	✓	✓	✓	✓
L2S2 Shutter A and B closed (**red**)	✓	✓	✓	✓	✓
FE Critical Device Permits A and B OFF	✓	✓	✓	✓	✓
Replace switch actuator and reset fault	✓	✓	✓	✓	✓
Remove Guillotine Shutter actuators and close labyrinth door					✓

A15 ***Hutch D Labyrinth 1 Switches and Latch***

Place actuators on the labyrinth switches/latch and downstream left door switches and Maglock. ✓

Open Guillotine Shutter. ✓

Check the corresponding Permits for each switch tested (e.g., A Permit for switch A1). Latch trips on both A and B Permits. **Note**: B chain reed and push button switches must be cycled together for reset.

	A1	**A2**	**B1**	**B2**	**Latch**
Search hutch	✓	✓	✓	✓	✓
Open FE Shutters and L2S2 Shutter from keypad	✓	✓	✓	✓	✓
FE and L2S2 Shutters A and B open (**green**)	✓	✓	✓	✓	✓
D Interlocked A and B ON (**green**)	✓	✓	✓	✓	✓
L2S2 Shutter Permit A and B ON (**green**)	✓	✓	✓	✓	✓
Cable Lab 1 Switches/Latch A and B ON (**green**)	✓	✓	✓	✓	✓
FE Critical Device Permits A and B ON	✓	✓	✓	✓	✓
Remove one switch actuator	✓	✓	✓	✓	✓
Cable Lab 1 Switch/Latch Permit OFF	✓	✓	✓	✓	✓
D Interlocked OFF	✓	✓	✓	✓	✓
L2S2 Shutter Permit OFF	✓	✓	✓	✓	✓
L2S2 Shutter A and B closed (**red**)	✓	✓	✓	✓	✓
FE Critical Device Permits A and B OFF	✓	✓	✓	✓	✓
Replace switch actuator and reset fault	✓	✓	✓	✓	✓
Remove labyrinth actuators and close labyrinth door					✓

A16 ***Hutch D Labyrinth 2 Switches and Latch***

Place actuators on the labyrinth switches/latches and downstream left door switches and Maglock. ✓

Open Guillotine Shutter. ✓

Check the corresponding Permits for each switch tested (e.g., A Permit for switch A1). Latch trips on both A and B Permits. **Note**: B chain reed and push button switches must be cycled together for reset.

	A1	A2	B1	B2	Latch
Search hutch	✓	✓	✓	✓	✓
Open FE Shutters and L2S2 Shutter from keypad	✓	✓	✓	✓	✓
FE and L2S2 Shutters A and B open (**green**)	✓	✓	✓	✓	✓
D Interlocked A and B ON (**green**)	✓	✓	✓	✓	✓
L2S2 Shutter Permit A and B ON (**green**)	✓	✓	✓	✓	✓
Cable Lab 2 Switches/Latch A and B ON (**green**)	✓	✓	✓	✓	✓
FE Critical Device Permits A and B ON	✓	✓	✓	✓	✓
Remove one switch actuator	✓	✓	✓	✓	✓
Cable Lab 2 Switch/Latch Permit OFF	✓	✓	✓	✓	✓
D Interlocked OFF	✓	✓	✓	✓	✓
L2S2 Shutter Permit OFF	✓	✓	✓	✓	✓
L2S2 Shutter A and B closed (**red**)	✓	✓	✓	✓	✓
FE Critical Device Permits A and B OFF	✓	✓	✓	✓	✓
Replace switch actuator and reset fault	✓	✓	✓	✓	✓
Remove labyrinth actuators and close labyrinth door					✓

A17 ***FOE Upstream Right Door Switches***

Place actuators on the door switches and Maglock. ✓

Check the corresponding Permits for each switch tested (e.g., A Permit for switch A1).

	A1	A2	B1	B2	Reed
Open FE Shutters from keypad	✓	✓	✓	✓	✓
FE Shutters A and B open (**green**)	✓	✓	✓	✓	✓
FOE Interlocked A and B ON (**green**)	✓	✓	✓	✓	✓
FE Shutter Permit A and B ON (**green**)	✓	✓	✓	✓	✓
FOE Door Switch Sum A and B ON (**green**)	✓	✓	✓	✓	✓
FE Critical Device Permits A and B ON	✓	✓	✓	✓	✓

Remove one switch actuator	✓	✓	✓	✓	✓
FE Shutters A and B closed (**red**)	✓	✓	✓	✓	✓
FOE Interlocked OFF	✓	✓	✓	✓	✓
FE Shutter Permit OFF	✓	✓	✓	✓	✓
FOE Door Switch Sum OFF	✓	✓	✓	✓	✓
FE Critical Device Permits A and B OFF	✓	✓	✓	✓	✓
Replace switch actuator and reset fault	✓	✓	✓	✓	✓
Remove actuators and close door					✓

A18 ***FOE Upstream Left Door Switches***

Place actuators on the door switches and Maglock. ✓

Check the corresponding Permits for each switch tested (e.g., A Permit for switch A1).

	A1	A2	B1	B2	Reed
Open FE Shutters from keypad	✓	✓	✓	✓	✓
FE Shutters A and B open (**green**)	✓	✓	✓	✓	✓
FOE Interlocked A and B ON (**green**)	✓	✓	✓	✓	✓
FE Shutter Permit A and B ON (**green**)	✓	✓	✓	✓	✓
FOE Door Switch Sum A and B ON (**green**)	✓	✓	✓	✓	✓
FE Critical Device Permits A and B ON	✓	✓	✓	✓	✓
Remove one switch actuator	✓	✓	✓	✓	✓
FE Shutters A and B closed (**red**)	✓	✓	✓	✓	✓
FOE Interlocked OFF	✓	✓	✓	✓	✓
FE Shutter Permit OFF	✓	✓	✓	✓	✓
FOE Door Switch Sum OFF	✓	✓	✓	✓	✓
FE Critical Device Permits A and B OFF	✓	✓	✓	✓	✓
Replace switch actuator and reset fault	✓	✓	✓	✓	✓
Remove actuators and close door					✓

A19 ***FOE Downstream Right Door Switches***

Place actuators on the door switches and Maglock. ✓

Check the corresponding Permits for each switch tested (e.g., A Permit for switch A1).

	A1	A2	B1	B2	Reed
Open FE Shutters from keypad	✓	✓	✓	✓	✓
FE Shutters A and B open (**green**)	✓	✓	✓	✓	✓
FOE Interlocked A and B ON (**green**)	✓	✓	✓	✓	✓
FE Shutter Permit A and B ON (**green**)	✓	✓	✓	✓	✓
FOE Door Switch Sum A and B ON (**green**)	✓	✓	✓	✓	✓
FE Critical Device Permits A and B ON	✓	✓	✓	✓	✓
Remove one switch actuator	✓	✓	✓	✓	✓
FE Shutters A and B closed (**red**)	✓	✓	✓	✓	✓
FOE Interlocked OFF	✓	✓	✓	✓	✓
FE Shutter Permit OFF	✓	✓	✓	✓	✓
FOE Door Switch Sum OFF	✓	✓	✓	✓	✓
FE Critical Device Permits A and B OFF	✓	✓	✓	✓	✓
Replace switch actuator and reset fault	✓	✓	✓	✓	✓
Remove actuators and close door					✓

A20 ***FOE Downstream Left Door Switches*** ✓

Place actuators on the door switches and Maglock.

Check the corresponding Permits for each switch tested (e.g., A Permit for switch A1).

	A1	A2	B1	B2	Reed
Open FE Shutters from keypad	✓	✓	✓	✓	✓
FE Shutters A and B open (**green**)	✓	✓	✓	✓	✓
FOE Interlocked A and B ON (**green**)	✓	✓	✓	✓	✓
FE Shutter Permit A and B ON (**green**)	✓	✓	✓	✓	✓
FOE Door Switch Sum A and B ON (**green**)	✓	✓	✓	✓	✓
FE Critical Device Permits A and B ON	✓	✓	✓	✓	✓
Remove one switch actuator	✓	✓	✓	✓	✓
FE Shutters A and B closed (**red**)	✓	✓	✓	✓	✓
FOE Interlocked OFF	✓	✓	✓	✓	✓
FE Shutter Permit OFF	✓	✓	✓	✓	✓
FOE Door Switch Sum OFF	✓	✓	✓	✓	✓
FE Critical Device Permits A and B OFF	✓	✓	✓	✓	✓

Replace switch actuator and reset fault	✓	✓	✓	✓	✓
Remove actuators and close door					✓

A21 ***B Hutch Front Door Switches*** ✓

Place actuators on the door switches and Maglock.

Check the corresponding Permits for each switch tested (e.g., A Permit for switch A1).

	A1	A2	B1	B2	Reed
Open FE Shutters and L1S1 Shutter from keypad	✓	✓	✓	✓	✓
FE and L1S1 Shutters A and B open (green)	✓	✓	✓	✓	✓
B Interlocked A and B ON (green)	✓	✓	✓	✓	✓
L1S1 Shutter Permit A and B ON (green)	✓	✓	✓	✓	✓
B Door Switch Sum A and B ON (green)	✓	✓	✓	✓	✓
FE Critical Device Permits A and B ON	✓	✓	✓	✓	✓
Remove one switch actuator	✓	✓	✓	✓	✓
L1S1 Shutter A and B closed (red)	✓	✓	✓	✓	✓
B Interlocked OFF	✓	✓	✓	✓	✓
L1S1 Shutter Permit OFF	✓	✓	✓	✓	✓
B Door Switch Sum OFF	✓	✓	✓	✓	✓
FE Critical Device Permits A and B OFF	✓	✓	✓	✓	✓
Replace switch actuator and reset fault	✓	✓	✓	✓	✓
Remove actuators and close door					✓

A22 ***C Hutch Front Right Door Switches*** ✓

Place actuators on the door switches and Maglock.

Check the corresponding Permits for each switch tested (e.g., A Permit for switch A1).

	A1	A2	B1	B2	Reed
Open FE Shutters and L2S2 Shutter from keypad	✓	✓	✓	✓	✓
FE and L2S2 Shutters A and B open (green)	✓	✓	✓	✓	✓
C Interlocked A and B ON (green)	✓	✓	✓	✓	✓
L2S2 Shutter Permit A and B ON (green)	✓	✓	✓	✓	✓
C Door Switch Sum A and B ON (green)	✓	✓	✓	✓	✓
FE Critical Device Permits A and B ON	✓	✓	✓	✓	✓

Remove one switch actuator	✓	✓	✓	✓	✓
L2S2 Shutter A and B closed (**red**)	✓	✓	✓	✓	✓
C Interlocked OFF	✓	✓	✓	✓	✓
L2S2 Shutter Permit OFF	✓	✓	✓	✓	✓
C Door Switch Sum OFF	✓	✓	✓	✓	✓
FE Critical Device Permits A and B OFF	✓	✓	✓	✓	✓
Replace switch actuator and reset fault	✓	✓	✓	✓	✓
Remove actuators and close door					✓

A23 ***C Hutch Front Left Door Switches*** ✓

Place actuators on the door switches and Maglock.

Check the corresponding Permits for each switch tested (e.g., A Permit for switch A1).

	A1	A2	B1	B2	Reed
Open FE Shutters and L2S2 Shutter from keypad	✓	✓	✓	✓	✓
FE and L2S2 Shutters A and B open (**green**)	✓	✓	✓	✓	✓
C Interlocked A and B ON (**green**)	✓	✓	✓	✓	✓
L2S2 Shutter Permit A and B ON (**green**)	✓	✓	✓	✓	✓
C Door Switch Sum A and B ON (**green**)	✓	✓	✓	✓	✓
FE Critical Device Permits A and B ON	✓	✓	✓	✓	✓
Remove one switch actuator	✓	✓	✓	✓	✓
L2S2 Shutter A and B closed (**red**)	✓	✓	✓	✓	✓
C Interlocked OFF	✓	✓	✓	✓	✓
L2S2 Shutter Permit OFF	✓	✓	✓	✓	✓
C Door Switch Sum OFF	✓	✓	✓	✓	✓
FE Critical Device Permits A and B OFF	✓	✓	✓	✓	✓
Replace switch actuator and reset fault	✓	✓	✓	✓	✓
Remove actuators and close door					✓

A24 ***C Hutch Rear Left Door Switches*** ✓

Place actuators on the door switches and Maglock.

Check the corresponding Permits for each switch tested (e.g., A Permit for switch A1).

	A1	A2	B1	B2	Reed
Open FE Shutters and L2S2 Shutter from keypad	✓	✓	✓	✓	✓
FE and L2S2 Shutters A and B open (**green**)	✓	✓	✓	✓	✓
C Interlocked A and B ON (**green**)	✓	✓	✓	✓	✓
L2S2 Shutter Permit A and B ON (**green**)	✓	✓	✓	✓	✓
C Door Switch Sum A and B ON (**green**)	✓	✓	✓	✓	✓
FE Critical Device Permits A and B ON	✓	✓	✓	✓	✓
Remove one switch actuator	✓	✓	✓	✓	✓
L2S2 Shutter A and B closed (**red**)	✓	✓	✓	✓	✓
C Interlocked OFF	✓	✓	✓	✓	✓
L2S2 Shutter Permit OFF	✓	✓	✓	✓	✓
C Door Switch Sum OFF	✓	✓	✓	✓	✓
FE Critical Device Permits A and B OFF	✓	✓	✓	✓	✓
Replace switch actuator and reset fault	✓	✓	✓	✓	✓
Remove actuators and close door					✓

A25 ***D Hutch Front Right Door Switches***

Place actuators on the door switches and Maglock. ✓

Open Guillotine Shutter. ✓

Check the corresponding Permits for each switch tested (e.g., A Permit for switch A1).

	A1	A2	B1	B2	Reed
Open FE Shutters and L2S2 Shutter from keypad	✓	✓	✓	✓	✓
FE and L2S2 Shutters A and B open (**green**)	✓	✓	✓	✓	✓
D Interlocked A and B ON (**green**)	✓	✓	✓	✓	✓
L2S2 Shutter Permit A and B ON (**green**)	✓	✓	✓	✓	✓
D Door Switch Sum A and B ON (**green**)	✓	✓	✓	✓	✓
FE Critical Device Permits A and B ON	✓	✓	✓	✓	✓
Remove one switch actuator	✓	✓	✓	✓	✓
L2S2 Shutter A and B closed (**red**)	✓	✓	✓	✓	✓
D Interlocked OFF	✓	✓	✓	✓	✓
L2S2 Shutter Permit OFF	✓	✓	✓	✓	✓
D Door Switch Sum OFF	✓	✓	✓	✓	✓

FE Critical Device Permits A and B OFF	✓	✓	✓	✓	✓
Replace switch actuator and reset fault	✓	✓	✓	✓	✓
Remove actuators and close door					✓

A26 ***D Hutch Front Left Door Switches***

Place actuators on the door switches and Maglock. ✓

Open Guillotine Shutter. ✓

Check the corresponding Permits for each switch tested (e.g., A Permit for switch A1).

	A1	A2	B1	B2	Reed
Open FE Shutters and L2S2 Shutter from keypad	✓	✓	✓	✓	✓
FE and L2S2 Shutters A and B open (**green**)	✓	✓	✓	✓	✓
D Interlocked A and B ON (**green**)	✓	✓	✓	✓	✓
L2S2 Shutter Permit A and B ON (**green**)	✓	✓	✓	✓	✓
D Door Switch Sum A and B ON (**green**)	✓	✓	✓	✓	✓
FE Critical Device Permits A and B ON	✓	✓	✓	✓	✓
Remove one switch actuator	✓	✓	✓	✓	✓
L2S2 Shutter A and B closed (**red**)	✓	✓	✓	✓	✓
D Interlocked OFF	✓	✓	✓	✓	✓
L2S2 Shutter Permit OFF	✓	✓	✓	✓	✓
D Door Switch Sum OFF	✓	✓	✓	✓	✓
FE Critical Device Permits A and B OFF	✓	✓	✓	✓	✓
Replace switch actuator and reset fault	✓	✓	✓	✓	✓
Remove actuators and close door					✓

A27 ***D Hutch Rear Left Door Switches***

Place actuators on the door switches and Maglock. ✓

Open Guillotine Shutter. ✓

Check the corresponding Permits for each switch tested (e.g., A Permit for switch A1).

	A1	A2	B1	B2	Reed
Open FE Shutters and L2S2 Shutter from keypad	✓	✓	✓	✓	✓
FE and L2S2 Shutters A and B open (**green**)	✓	✓	✓	✓	✓
D Interlocked A and B ON (**green**)	✓	✓	✓	✓	✓

The only official copy of this document is the one online in the NSLS-II Document and Records Center. Before using a printed copy, verify that it is current by checking the printed document's revision history log with that of the online version.

L2S2 Shutter Permit A and B ON (**green**)	✓	✓	✓	✓	✓
D Door Switch Sum A and B ON (**green**)	✓	✓	✓	✓	✓
FE Critical Device Permits A and B ON	✓	✓	✓	✓	✓
Remove one switch actuator	✓	✓	✓	✓	✓
L2S2 Shutter A and B closed (**red**)	✓	✓	✓	✓	✓
D Interlocked OFF	✓	✓	✓	✓	✓
L2S2 Shutter Permit OFF	✓	✓	✓	✓	✓
D Door Switch Sum OFF	✓	✓	✓	✓	✓
FE Critical Device Permits A and B OFF	✓	✓	✓	✓	✓
Replace switch actuator and reset fault	✓	✓	✓	✓	✓
Remove actuators and close door					✓

A28 ***D Hutch Rear Right Door Switches***

Place actuators on the door switches and Maglock. ✓

Open Guillotine Shutter. ✓

Check the corresponding Permits for each switch tested (e.g., A Permit for switch A1).

	A1	A2	B1	B2	Reed
Open FE Shutters and L2S2 Shutter from keypad	✓	✓	✓	✓	✓
FE and L2S2 Shutters A and B open (**green**)	✓	✓	✓	✓	✓
D Interlocked A and B ON (**green**)	✓	✓	✓	✓	✓
L2S2 Shutter Permit A and B ON (**green**)	✓	✓	✓	✓	✓
D Door Switch Sum A and B ON (**green**)	✓	✓	✓	✓	✓
FE Critical Device Permits A and B ON	✓	✓	✓	✓	✓
Remove one switch actuator	✓	✓	✓	✓	✓
L2S2 Shutter A and B closed (**red**)	✓	✓	✓	✓	✓
D Interlocked OFF	✓	✓	✓	✓	✓
L2S2 Shutter Permit OFF	✓	✓	✓	✓	✓
D Door Switch Sum OFF	✓	✓	✓	✓	✓
FE Critical Device Permits A and B OFF	✓	✓	✓	✓	✓
Replace switch actuator and reset fault	✓	✓	✓	✓	✓
Remove actuators and close door					✓

A29 ***Magnetic Lock Test (FOE)***

Connect the FOE test box to the PPS cabinet. Use the box to turn ON the Maglocks (set switches to "Normal"). ✓

Repeat steps for each door: Upstream Right (USR), Upstream Left (USL), Downstream Right (DSR) and Downstream Left (DSL)

	USR	USL	DSR	DSL
Search hutch	✓	✓	✓	✓
FOE Interlocked A and B ON (**green**)	✓	✓	✓	✓
FE Shutter Permit A and B ON (**green**)	✓	✓	✓	✓
Door Maglock A and B ON (**green**)	✓	✓	✓	✓
Open FE Shutters	✓	✓	✓	✓
FE Shutters open (**green**)	✓	✓	✓	✓
Using FOE test box, turn OFF Maglock	✓	✓	✓	✓
Door Maglock A OFF	✓	✓	✓	✓
FOE Shutters closed (**red**)	✓	✓	✓	✓
FOE Interlocked A OFF	✓	✓	✓	✓
FE Shutter Permit A OFF	✓	✓	✓	✓
Turn On Maglock and reset fault	✓	✓	✓	✓
Search hutch	✓	✓	✓	✓
Using FE Shutter test fixture, Open FE Shutters	✓	✓	✓	✓
FE Critical Device Permits A and B ON	✓	✓	✓	✓
Using FOE test box, turn OFF Maglock	✓	✓	✓	✓
Within 3 seconds: FE Critical Device Permit A Chain OFF	✓	✓	✓	✓
Close FE Shutters and reset fault	✓	✓	✓	✓
Disconnect FOE test box				✓

A30 ***Magnetic Lock Test (B Hutch)***

Connect the FOE test box to the PPS cabinet. Use the box to turn ON the Maglocks (set switches to "Normal"). ✓

	FR
Search hutch	✓
B Interlocked A and B ON (**green**)	✓
L1S1 Shutter Permit A and B ON (**green**)	✓
Door Maglock A and B ON (**green**)	✓

Open FE Shutters and L1S1 Shutter ✓

FE and L1S1 Shutters A and B open (**green**) ✓

Using FOE test box, turn OFF Maglock ✓

Door Maglock A OFF ✓

Shutters closed (**red**) ✓

B Interlocked A OFF ✓

L1S1 Shutter Permit A OFF ✓

Turn On Maglock and reset fault ✓

Search hutch ✓

Using FE Shutter test fixture, Open FE Shutters ✓

Using FOE test box, Open L1S1 Shutter ✓

FE Critical Device Permits A and B ON ✓

Using FOE test box, turn OFF Maglock ✓

Within 3 seconds: FE Critical Device Permit A Chain OFF ✓

Close all Shutters and reset fault ✓

Disconnect FOE test box ✓

A31 ***Magnetic Lock Test (C Hutch)***

Connect the FOE test box to the PPS cabinet. Use the box to turn ON the Maglocks (set switches to "Normal"). ✓

Repeat steps for each door: Front Right (FR), Front Left (FL) and Rear (R)

	FR	FL	R
Search hutch	✓	✓	✓
C Interlocked A and B ON (**green**)	✓	✓	✓
L2S2 Shutter Permit A and B ON (**green**)	✓	✓	✓
Door Maglock A and B ON (**green**)	✓	✓	✓
Open FE Shutters and L2S2 Shutter	✓	✓	✓
FE and L2S2 Shutters A and B open (**green**)	✓	✓	✓
Using FOE test box, turn OFF Maglock	✓	✓	✓
Door Maglock A OFF	✓	✓	✓
Shutters closed (**red**)	✓	✓	✓
C Interlocked A OFF	✓	✓	✓
L2S2 Shutter Permit A OFF	✓	✓	✓

Turn On Maglock and reset fault	✓	✓	✓
Search hutch	✓	✓	✓
Using FE Shutter test fixture, Open FE Shutters	✓	✓	✓
Using FOE test box, Open L2S2 Shutter	✓	✓	✓
FE Critical Device Permits A and B ON	✓	✓	✓
Using FOE test box, turn OFF Maglock	✓	✓	✓
Within 3 seconds: FE Critical Device Permit A Chain OFF	✓	✓	✓
Close all Shutters and reset fault	✓	✓	✓
Disconnect FOE test box			✓

A32 ***Magnetic Lock Test (D Hutch)***

Connect the FOE test box to the PPS cabinet. Use the box to turn ON the Maglocks (set switches to "Normal"). ✓

Repeat steps for each door: Front Right (FR), Front Left (FL), Rear Right (RR) and Rear Left (RL)

	FR	FL	RR	RL
Search hutch	✓	✓	✓	✓
D Interlocked A and B ON (**green**)	✓	✓	✓	✓
L2S2 Shutter Permit A and B ON (**green**)	✓	✓	✓	✓
Door Maglock A and B ON (**green**)	✓	✓	✓	✓
Open FE Shutters and L2S2 Shutter	✓	✓	✓	✓
FE and L2S2 Shutters A and B open (**green**)	✓	✓	✓	✓
Using FOE test box, turn OFF Maglock	✓	✓	✓	✓
Door Maglock A OFF	✓	✓	✓	✓
Shutters closed (**red**)	✓	✓	✓	✓
D Interlocked A OFF	✓	✓	✓	✓
L2S2 Shutter Permit A OFF	✓	✓	✓	✓
Turn On Maglock and reset fault	✓	✓	✓	✓
Search hutch	✓	✓	✓	✓
Using FE Shutter test fixture, Open FE Shutters	✓	✓	✓	✓
Using FOE test box, Open L2S2 Shutter	✓	✓	✓	✓
FE Critical Device Permits A and B ON	✓	✓	✓	✓
Using FOE test box, turn OFF Maglock	✓	✓	✓	✓

Within 3 seconds: FE Critical Device Permit A Chain OFF ✓ ✓ ✓ ✓

Close all Shutters and reset fault ✓ ✓ ✓ ✓

Disconnect FOE test box ✓

A33 ***Water Interlock***

Water flow meters are located on top of the hutch (Figure 1).

Figure 1: Water Flow Meter PPS 1 (A1 and B1) **Figure 2:** Water Flow Meter PPS 2 (A13 and B13)

The PPS Water Safety Test Amplifiers (STA) are located in the cabinet to the upper right of the meters on top of the hutch (Figure 3).

Figure 3: PPS Water STAs

Record the pretest water flows for the 4 PPS meters in GPM. Valve numbers are in parentheses:

Meter Reading	Meter Reading	Current STA A	Current STA B
A1(1)= 2.56	B1= 2.49	A STA1= 2.56	B STA1= 2.49
A2(13)= 2.97	B2= 2.92	A STA2= 2.97	B STA2= 2.92

The current programmed trip settings for the amplifiers are in column 1. The STA readouts for each tested A and B chain STAs will be recorded in columns 3 and 4. These recordings should be within 15% of the programmed trip point (column 2).

Trip Points	Trip Points (- 15 %)	Recorded A Trip	Recorded B Trip
PPS 1: 2.1 GPM	1.79 GPM	A STA1= 2.1	B STA1= 2.0
PPS 2: 2.0 GPM	1.7 GPM	A STA2= 2.0	B STA2= 2.0

Repeat each step for all water flow meters.	PPS1	PPS2
Open FE Shutters	✓	✓
FE Shutters A and B open (**green**)	✓	✓
Water Permits A and B ON (**green**), HMI	✓	✓
FE Shutter Permits A and B ON (**green**), HMI	✓	✓
Using the valve, lower water flow to trip point	✓	✓
FE Shutters A and B closed (**red**)	✓	✓
In 5 seconds: FE Shutter Permits A and B OFF, HMI	✓	✓
Water Permits A and B OFF, HMI	✓	✓
Recorded STA A and B levels above; within 15%	✓	✓
Return water flow to pretest values	✓	✓
Water Permits A and B remain OFF, HMI	✓	✓
Reset fault at PPS cabinet	✓	✓
Water Permits A and B ON (**green**), HMI	✓	✓
FE Shutter Permits A and B ON (**green**), HMI	✓	✓

A34 ***Water Safety Test Amplifier Faults***

Repeat each step for all water flow meters.

	PPS1	PPS2
Open FE Shutters with keypad	✓	✓
FE Shutters A and B open (**green**)	✓	✓
Water Permits A and B ON (**green**), HMI	✓	✓
FE Shutter Permits A and B ON (**green**), HMI	✓	✓
Press A chain fault/reset button	✓	✓
FE Shutters A and B closed (**red**)	✓	✓
Water Permit A OFF, HMI	✓	✓
In 5 seconds: FE Shutter Permit A OFF, HMI	✓	✓

Reset fault	✓	✓
Open FE Shutters with keypad	✓	✓
FE Shutters A and B open (**green**)	✓	✓
Water Permits A and B ON (**green**), HMI	✓	✓
FE Shutter Permits A and B ON (**green**), HMI	✓	✓
Press B chain fault/reset button	✓	✓
FE Shutters A and B closed (**red**)	✓	✓
Water Permit B OFF, HMI	✓	✓
In 5 seconds: FE Shutter Permit B OFF, HMI	✓	✓
Reset fault	✓	✓

A35 ***Observe Beamline Photon Shutter Operation***

	L1S1	L2S2
Close Beamline Photon Shutter	✓	✓
Shutter indicates closed A and B (**red**), HMI	✓	✓
Open Beamline Photon Shutter	✓	✓
Shutter opens smoothly without hesitation	✓	✓
Shutter indicates open A and B (**green**), HMI	✓	✓
Close Beamline Photon Shutter	✓	✓
Shutter indicates closed A and B (red), HMI	✓	✓

A36 ***Observe FE Safety Shutter(s) Operation***

With Maintenance Door open, connect FE Shutter test fixture.		✓
	Shutters are in the closed (down) position	✓
	FE Shutters A and B closed (**red**), HMI	✓
Turn the "Air" switch ON		✓
Open FE Photon Shutter and SSs A and B	Shutters open freely without hesitation	✓
	Shutters are in the open (up) position	✓
	FE Shutters A and B open (**green**), HMI	✓
Actuate Shutters closed	FE Shutters A and B closed (**red**), HMI	✓

A37 ***FE Safety Shutters Can Only be Closed if FE Photon Shutter is Closed***

Search Hutch	FOE Interlocked A and B ON (**green**), HMI	✓
	FE Critical Device Permits A and B ON (**green**), HMI	✓
Open FE SSA	SSA Open	✓
Open FE Photon Shutter	FE Critical Device Permits A and B OFF, HMI	✓
Close Shutters		✓
Reset fault	FE Critical Device Permits A and B ON (**green**), HMI	✓
Open FE SSB	SSB Open	✓
Open FE Photon Shutter	FE Critical Device Permits A and B OFF, HMI	✓
Close Shutters		✓
Reset fault	FE Critical Device Permits A and B ON (**green**), HMI	✓

A38 ***Beamline Enable Key (Opening Shutter Without Key Trips SR RF and Dipole PS)***

Remove beamline enable key	Beamline Online A and B OFF	✓
Search FOE	FOE Interlocked A and B ON (**green**), HMI	✓
	FE Critical Device Permits A and B ON (**green**), HMI	✓
Using FE Shutter test fixture, Open FE Shutters	FE Critical Devices Permits A and B OFF	✓
Using FE Shutter test fixture, Close FE Shutters		✓
Replace beamline enable key and reset faults	Beamline Online A and B ON (**green**)	✓
	FE Critical Device Permits A and B ON (**green**), HMI	✓

Live Testing

A39 ***Reach Back FOE Door Switches***

Secure P1 through P5	SR Secure, A and B chain, SR HMI	✓
Place actuators on FOE hutch door switches and Maglock		✓
Search hutch	FOE Interlocked A and B ON (**green**), HMI	✓
	FE Critical Device Permits A and B ON (**green**), HMI	✓
Check Control Room SR HMI (MCR beamline 1)	FE Critical Device Permit A and B ON (**green**), SR HMI	✓
Check I/O Box 28 Beamline Enable Panel	FE Critical Device Permits A and B LEDs ON	✓
	FE Critical Device Permit Sum A and B LEDs ON	✓

Check Dipole PS (positive) Beamline Interface	A and B Permits ON, Dipole PS Pos. Interface	✓
Check Dipole PS (negative) Beamline Interface	A and B Permits ON, Dipole PS Neg. Interface	✓
Check SR RF System C HVPS Beamline Interface	A and B Permits ON, SR RF System C HVPS Interface	✓
Check SR RF System D HVPS Beamline Interface	A and B Permits ON, SR RF System D HVPS Interface	✓
Operator enables SR Dipole PS	SR Dipole PS is ON	✓
Operator enables SR RF System C HVPS	SR RF System C HVPS is ON	✓
Operator enables SR RF System D HVPS	SR RF System D HVPS is ON	✓
Using FE Shutter test fixture, open the FE Shutters (SSA, SSB and Photon)		✓
	FE Shutters open	✓
*Remove an "**A chain**" door switch actuator from beamline hutch door*		✓
	FOE Interlocked A OFF, HMI	✓
	FE Critical Device Permit A chain OFF, HMI	✓
Check I/O Box 28 Beamline Enable Panel	FE Critical Device Permit A LED OFF	✓
	FE Critical Device Permit Sum A LED OFF	✓
Check Control Room SR HMI (MCR beamline 1)	FE Critical Device Permit A OFF (**red**), SR HMI	✓
Check SR RF System C HVPS Beamline Interface	A Permit OFF, SR RF System C HVPS Interface	✓
Check SR RF System D HVPS Beamline Interface	A Permit OFF, SR RF System D HVPS Interface	✓
Check Dipole PS (positive) Beamline Interface	A Permit OFF, Dipole PS Pos. Interface	✓
Check Dipole PS (negative) Beamline Interface	A Permit OFF, Dipole PS Neg. Interface	✓
	SR RF System C HVPS is OFF	✓
	SR RF System D HVPS is OFF	✓
	SR Dipole PS is OFF	✓
Close FE Shutters with FE Shutter test fixture	FE Shutters closed	✓
Replace "***A chain***" door switch actuator and rest fault(s)		✓
Search hutch		✓
	FOE Interlocked A and B ON (**green**), HMI	✓
	FE Critical Device Permits A and B ON (**green**), HMI	✓
Check Control Room SR HMI (MCR beamline 1)	FE Critical Device Permit A and B ON (**green**), SR HMI	✓
Check I/O Box 28 Beamline Enable Panel	FE Critical Device Permits A and B LEDs ON	✓
	FE Critical Device Permit Sum A and B LEDs ON	✓

Check Dipole PS (positive) Beamline Interface	A and B Permits ON, Dipole PS Pos. Interface	✓
Check Dipole PS (negative) Beamline Interface	A and B Permits ON, Dipole PS Neg. Interface	✓
Check SR RF System C HVPS Beamline Interface	A and B Permits ON, SR RF System C HVPS Interface	✓
Check SR RF System D HVPS Beamline Interface	A and B Permits ON, SR RF System D HVPS Interface	✓
Operator enables SR Dipole PS	SR Dipole PS is ON	✓
Operator enables SR RF System C HVPS	Operator enables SR RF System C HVPS	✓
Operator enables SR RF System D HVPS	Operator enables SR RF System D HVPS	✓
Using FE Shutter test fixture, open the FE Shutters (SSA, SSB and Photon)		✓
	FE Shutters open	✓
Remove "***B chain***" switch actuator	FOE Interlocked B OFF, HMI	✓
	FE Critical Device Permit B OFF, HMI	✓
Check I/O Box 28 Beamline Enable Panel	FE Critical Device Permit B LED OFF	✓
	FE Critical Device Permit Sum B LED OFF	✓
Check Control Room SR HMI (MCR beamline 1)	FE Critical Device Permit B OFF (**red**), SR HMI	✓
Check SR RF System C HVPS Beamline Interface	B Permit OFF, SR RF System C HVPS Interface	✓
Check SR RF System D HVPS Beamline Interface	B Permit OFF, SR RF System D HVPS Interface	✓
Check Dipole PS (positive) Beamline Interface	B Permit OFF, Dipole PS Pos. Interface	✓
Check Dipole PS (negative) Beamline Interface	B Permit OFF, Dipole PS Neg. Interface	✓
	SR Dipole PS is OFF	✓
	SR RF System C HVPS is OFF	✓
	SR RF System D HVPS is OFF	✓
Close FE Shutters with FE Shutter test fixture	FE Shutters closed	✓
Remove beamline hutch switch actuators and Maglock actuator		✓

A40 ***Water Interlock (Live)***

Search FOE	FOE Interlocked A and B ON (**green**), HMI	✓
	FE Shutter Permits A and B ON (**green**), HMI	✓
	FE Critical Device Permits A and B ON (**green**), HMI	✓
Check I/O Box 28 Beamline Enable Panel	FE Critical Device Permits A and B LEDs ON	✓
	FE Critical Device Permit Sum A and B LEDs ON	✓

Check Control Room SR HMI (MCR beamline 1)	FE Critical Device Permit A and B ON (**green**), SR HMI	✓
Check Dipole PS (positive) Beamline Interface	A and B Permits ON, Dipole PS Pos. Interface	✓
Check Dipole PS (negative) Beamline Interface	A and B Permits ON, Dipole PS Neg. Interface	✓
Check SR RF System C HVPS Beamline Interface	A and B Permits ON, SR RF System C HVPS Interface	✓
Check SR RF System D HVPS Beamline Interface	A and B Permits ON, SR RF System D HVPS Interface	✓
Operator enables SR Dipole PS	SR Dipole PS is ON	✓
Operator enables SR RF System C HVPS	SR RF System C HVPS is ON	✓
Operator enables SR RF System D HVPS	SR RF System D HVPS is ON	✓
Using FE Shutter test fixture, turn on air and open Photon then SSs		✓
	FE Shutters indicate open (**green**), HMI	✓
Using water trip points in Step A33, lower flow to one meter		✓
	Water Permits A and B OFF, HMI	✓
	FE Shutter Permits A and B OFF, HMI	✓
Within 5 seconds	FE Critical Device Permits A and B OFF, HMI	✓
Check I/O Box 28 Beamline Enable Panel	FE Critical Device Permits A and B OFF	✓
	FE Critical Device Permit Sum A and B LEDs OFF	✓
Check Control Room SR HMI (MCR beamline 1)	FE Critical Device Permits A and B OFF, SR HMI	✓
Check SR RF System C HVPS Beamline Interface	A and B Permits OFF, SR RF System C HVPS Interface	✓
Check SR RF System D HVPS Beamline Interface	A and B Permits OFF, SR RF System D HVPS Interface	✓
Check Dipole PS (positive) Beamline Interface	A and B Permits OFF, Dipole PS Pos. Interface	✓
Check Dipole PS (negative) Beamline Interface	A and B Permits OFF, Dipole PS Neg. Interface	✓
	SR RF System C HVPS is OFF	✓
	SR RF System D HVPS is OFF	✓
	SR Dipole PS is OFF	✓
Close FE Shutters with FE Shutter test fixture	FE Shutters closed	✓
Return water flow to recorded level		✓
Reset fault(s)		✓

A41 ***Observe All Shutters Closed Sum***

Check I/O Box 28 Beamline Enable Panel	FE Shutters closed A chain light ON	✓
	FE Shutters closed B chain light ON	✓

Using FE Shutter test fixture, open both FE SSs and then Photon Shutter ✓

FE Shutters open (**green**), HMI ✓

Check I/O Box 28 Beamline Enable Panel FE Shutters closed A chain light OFF ✓

FE Shutters closed B chain light OFF ✓

Close FE Shutters and remove FE Shutter test fixture ✓

A42 ***FOE Area Radiation Monitor***

Refer to PS-C-ASD-PRC-008, *NSLS-II Area Radiation Monitor PPS Test* and complete Attachment D, *NSLS-II Beamline (FOE) Area Radiation Monitor Checklist.*

FRM 28-ID Test Checklist Completed ✓

A43 ***Test Completion***

Inspect all hutch doors and labyrinths to ensure all PPS switch and Maglock actuators have been removed ✓

Return Beamline enable key and Beamline PPS reset keys to the Control Room ✓

Remove muffler from beam imminent sounder ✓

Ensure PPS cabinets are secure and locked; challenge locks ✓

Remove all LOTO ✓

Inform Lead Operator that testing is complete ✓

- END -

Reviewed by:

1/25/2018

X Scott W Buda

Scott Buda
Accelerator Safety Systems Group Leader
Signed by: Buda, Scott

1/12/2018

X Robert Chmiel

Robert Chmiel
NSLS-II Safety Officer
Signed by: Chmiel, Robert

Approved by:

1/16/2018

X

Robert Lee
NSLS-II ESH Manager
Signed by: Lee, Robert J

Revision History

Revision	Description	Date
1	First Issue.	23DEC2016
2	Revised with the addition of the "B" hutch PPS	21DEC2017
3	Removed ES4 from step A7.	10JAN2018

Attachment D
NSLS-II Beamline (FOE) Area Radiation Monitor Checklist

Note: Signatures below indicate that the test has been completed. DET# IN07414

Monitor # FRM ID28	**ID #** IN07408	**Beamline:** 28ID
Test Reason: ☑ **Beamline Certification**	☐ **Replacement/Repair**	
Test Date: 1/3/18	**Test Result** ☑ **Passed**	☐ **Failed**
Tester : Thomas P. McDonald	**RCD:** J. Dobrick	
Tester Signature: Thomas P. McDonald	**RCD Signature:** [illegible]	

Fail Alarm: Place checkmark (✓) in checkbox (☐) for each correct response.

	Local Expected Observation	HMI/CR Expected Observation	Linac HMI	CR HMI
Operator turns on Gun	Gun HVPS is ON ☑	Gun Contactor ON A Chain	☑	☑
RCD Disables Monitor		Alarm sounds in Control Room		☑
	Fail alarm ON HMI (yellow border around ARM icon)		☑	☑
Silence CR Alarm		Alarm silences		☑
Gun turns OFF	Gun HVPS is OFF ☑	Gun Contactor OFF A Chain	☑	☑
Return monitor to normal	Gun HVPS remains OFF ☑	Fail alarm remains ON HMI	☑	☑
Reset fault in Control Room		Monitor normal HMI	☑	☑
RCD ensures ARM is locked	ARM is locked ☑			

Low Alarm: Place checkmark (✓) in checkbox (☐) for each correct response.

	Local Expected Observation	HMI/CR Expected Observation	Beamline HMI	CR HMI/EPICS
Opens FE shutter (w/keypad)	FE Shutters open ☑		☑	☑
Apply source until low alarm	Yellow light on Monitor ☑	Radiation level increases on EPICS		☑
	FE Shutters Closed ☑	Alarm sounds in Control Room		☑
		Low level alarm ON, HMI	☑	☑
Return monitor to normal		Monitor normal, HMI	☑	☑
	FE Critical Device Permit A chain ON		☑	☑
Apply source until low alarm	Yellow light on Monitor ☑			☑
	FE Critical Device Permit A chain OFF		☑	☑
Return monitor to normal		Monitor normal, HMI	☑	☑

High Alarm: Place checkmark (✓) in checkbox (☐) for each correct response.

	Local Expected Observation	HMI/CR Expected Observation	Linac HMI	CR HMI/EPICS
Operator turns on Gun	Gun HVPS is ON ☑	Gun Contactor ON A Chain	☑	☑
Apply source until high alarm	Red light on Monitor ☑	Radiation level increases on EPICS		☑
	Monitor alarm sounds	Alarm sounds in Control Room		☑
		High level alarm ON, HMI	☑	☑
Silence Alarm		Alarm silences		☑
Gun turns OFF	Gun HVPS is OFF ☑	Gun Contactor OFF A Chain	☑	☑
Return monitor to normal	Gun HVPS remains OFF ☑	High level alarm remains ON, HMI	☑	☑
Reset fault in Control Room		Monitor normal, HMI	☑	☑

Description of Test Failures (if any):_____

ID's → 11 / 28

BROOKHAVEN NATIONAL LABORATORY

Inspection/Test Record

Photon Sciences Directorate
National Synchrotron Light Source II

Document Title: Hutch Door PPS Mechanical Inspection

Beamline: B- Hutch, 28 ID

Door Location: B Hutch

Type: Left / Right *(circle one)*

Reference Names / Nomenclature

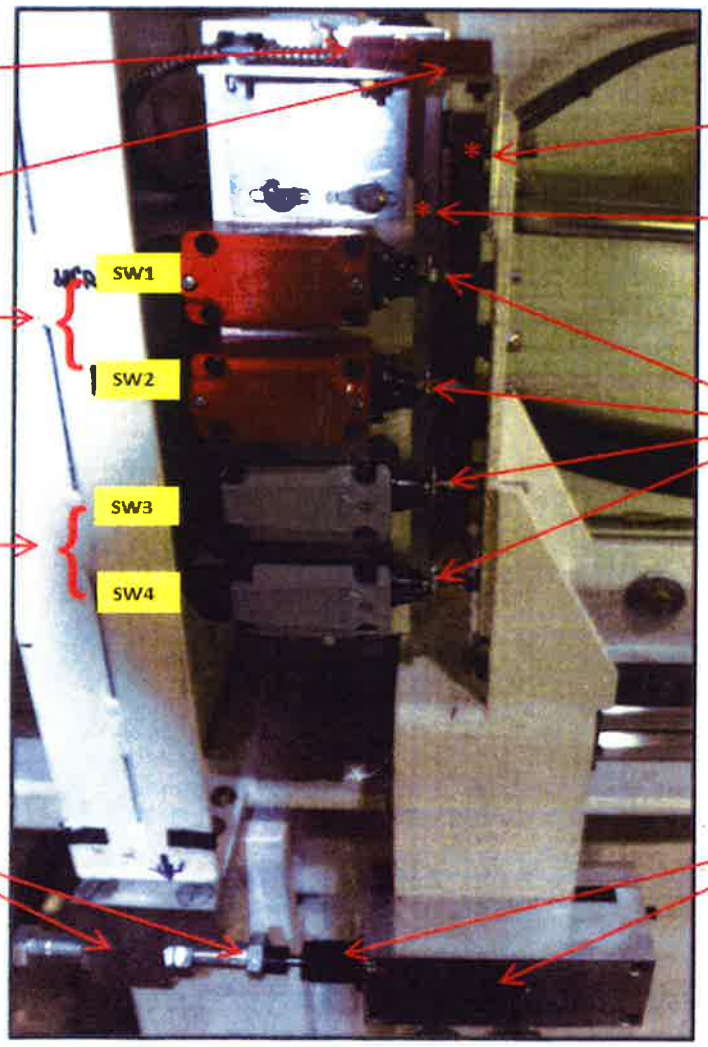

(Right-hand door shown above)

(left-hand is mirror image)

Op #

1) Allen Bradley Switch Projection (Inspect while the door is open)

ID	Inspection Description	Switch Designation	Specification	Measured Value	Pass/Fail	DR #	Name/Life #	Date
1a	**Allen Bradley Plunger Projection** (Plunger fully Open)	SW1	.40" (+/- .02")	.38	PASS		TW 25596	1/11/18
		SW2	.40" (+/- .02")	.38	PASS			
1b	**Allen Bradley Plunger Projection** (Plunger fully compressed)	SW1	.08" (+/- .02")	.08	PASS			
		SW2	.08" (+/- .02")	.08	PASS			

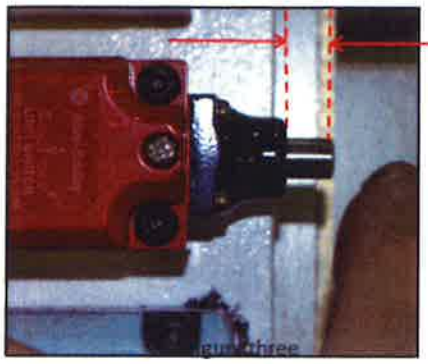

Projection from switch body (fully open)

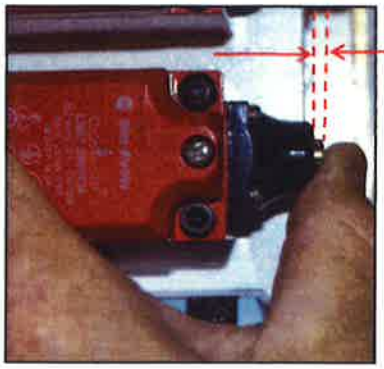

Projection from switch body (fully closed)

2) Siemens Switch Projection (Inspect while the door is open)

ID	Inspection Description	Switch Designation	Specification	Measured Value	Pass/Fail	DR #	Name/Life #	Date
2a	**Siemens Plunger Projection** (Plunger fully Open)	SW3	.40" (+/- .02")	.40	PASS		TW 25596	1/11/18
		SW4	.40" (+/- .02")	.40	PASS			
2b	**Siemens Plunger Projection** (Plunger fully compressed)	SW3	Flush	Flush	PASS			
		SW4	Flush	Flush	PASS			

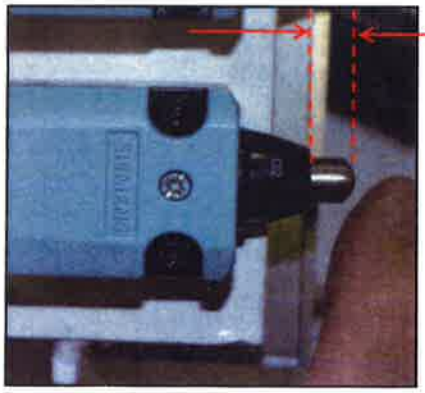

Projection from switch body (fully open)

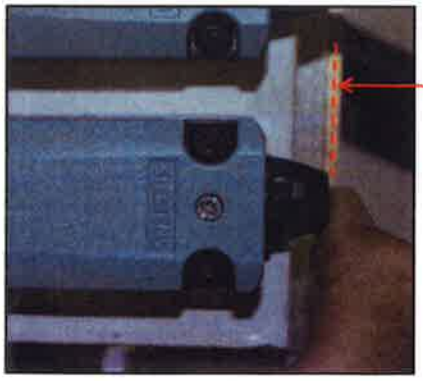

Flush with switch body (fully closed)

3) Switch Mechanical Operation (Inspect while the door is open)

ID	Inspection Description	Switch Designation	Does Switch Operate Freely (Yes)	Does Switch Operate Freely (No)	Pass/Fail	DR #	Name/ Life #	Date
3a	**Allen Bradley Plunger Operation** (using your finger, fully depress the Plunger 3-5 times)	SW1	Yes		PASS		TW 25596	1/11/18
		SW2	Yes		PASS			
3b	**Siemens Plunger Operation** (using your finger, fully depress the Plunger 3-5 times)	SW3	Yes		PASS			
		SW4	Yes		PASS			

4) **Allen Bradley Plunger Projection Upon Door Closure (Inspect while the door is fully closed)**

ID	Inspection Description	Switch Designation	Specification	Measured Value	Pass/Fail	DR #	Name/ Life #	Date
4a	**Measure Allen Bradley struck Plunger Projection** (distance between "switch-body" and Striker (Elevator Bolt) when the door is closed)	SW1	.18" (+/- .05)	.14	Pass		TD 28596	1/11/18
		SW2	.18" (+/- .05)	.14	Pass			

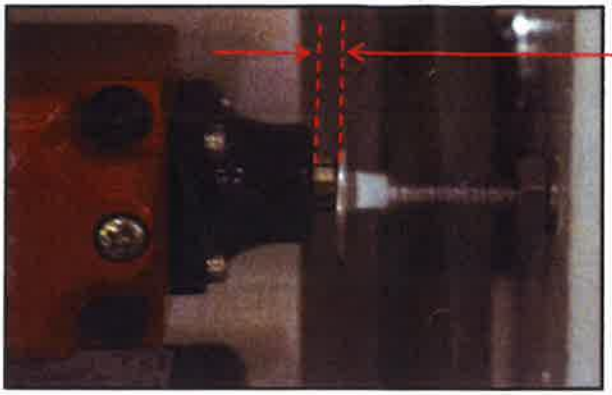

.18" +/-.050
(Clearance at closure)

5) **Siemens Plunger Projection Upon Door Closure (Inspect while the door is fully closed)**

ID	Inspection Description	Switch Designation	Specification	Measured Value	Pass/Fail	DR #	Name/ Life #	Date
5a	**Measure Siemens struck Plunger Projection** (distance between "switch-body" and Striker (hex bolt) when the door is closed)	SW3	.15" (+/- .05)	.17	Pass		TD 28596	1/11/18
		SW4	.15" (+/- .05)	.17	Pass			

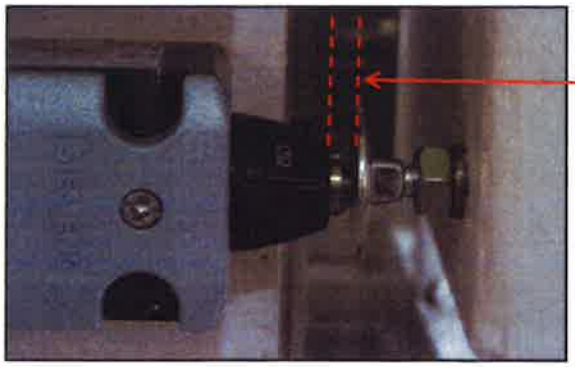

.15" +/-.050
(Clearance at closure)

6) **Clearance Between Reed Switch Sensor and Actuator (Inspect while the door is fully closed)**

ID	Inspection Description	Specification	Measured Value	Pass/Fail	DR #	Name/ Life #	Date
6a	**Measure clearance between the Reed Switch Sensor and Actuator**	**1/8" (max)**	1/16"	Pass		TD 28596	1/11/18

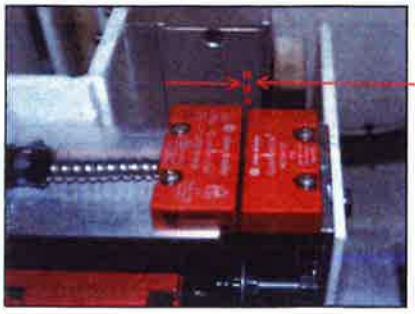

1/8" max clearance
(between Sensor & Actuator)

Op #

7) Verify Contact Between the Mag-Lock and Armature (Inspect while the door is fully closed)

ID	Inspection Description	Specification	Pass/Fail	DR #	Name/ Life #	Date
7a	Verify full contact between the Mag-Lock and Armature. (measure when door is fully closed)	No visible Gaps	PASS		25596	1/11/18

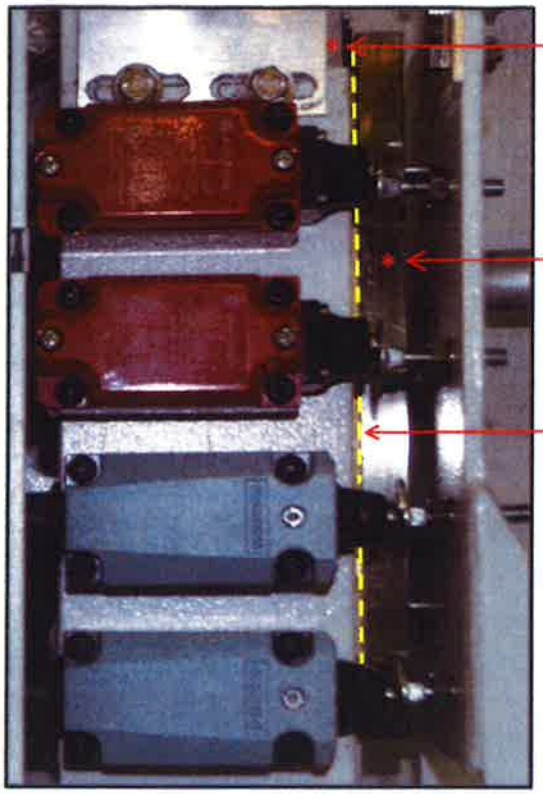

Op #

8) Verify Proper Location of Damber Assembly

ID	Inspection Description	Pass/Fail	DR #	Name/ Life #	Date
8a	Verify that all four socket cap bolts are tight and the backing plate is well secured.	PASS		25596	1/11/18
8b	Verify that both set-screws are fully advanced against the "Door Support".	PASS		25596	1/11/18
8c	Verify that no gap exists between the Damper Mounting Block and the "Door Support" (see below).	PASS		25596	1/11/18
8d	Verify that the Damper Jam-Nut is tight againsts the Damper Mounting Block.	PASS		25596	1/11/18

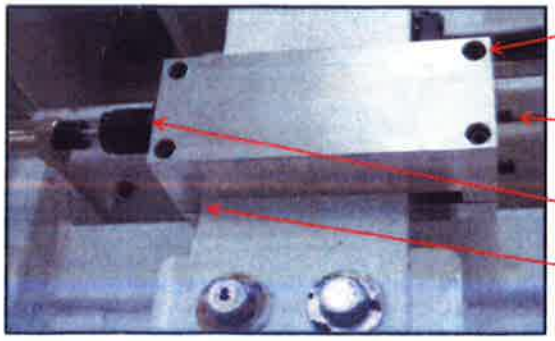

Op #

9) Verify Hard Stop Position (Damper)

ID	Inspection Description	Measured Projection	Pass/Fail	DR #	Name/ Life #	Date
9a	**Measure plunger projection while the Damper is full compressed by hand (see image on left below)** (measurement should be obtained by compressing the plunger by hand while the door is open)	.185	N/A		25596	1/11/18
9b	**Measure plunger projection when the door is fully closed (see image on right below)** (Measurement should be obtained while the Mag-lock is engaged and the door is fully closed)	.200	N/A			
9c	**Verify measurement obtained in step 9a is equal to the measurement obtained in step 9b** (measurement should be obtained while the Mag-lock is engaged and the door is fully closed)	N/A	PASS			

Measure while door is open (see step 9a)

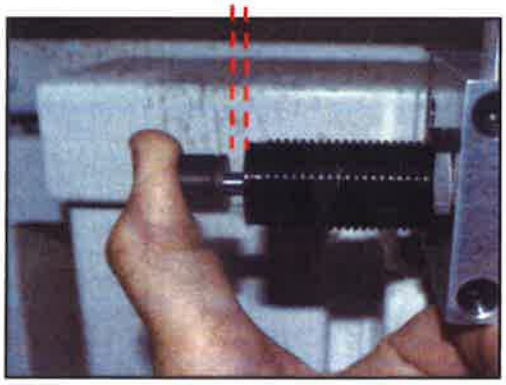

Measure while door is closed (see step 9b)

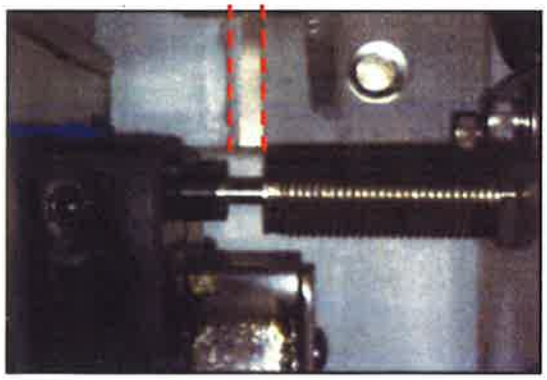

10) Verify Integrity of Mechanical Installation (Inspect while the door is open)

ID	Inspection Description	Component	Pass/Fail	DR #	Name/ Life #	Date
10a	**Proper mounting of Switches** (Verify that all four limit switches are properly secured and all mounting hardware is in place)	SW1	PASS		25596	1/11/18
		SW2	PASS			
		SW3	PASS			
		SW4	PASS			
10b	**Switch cover installation** (Verify that each switch cover is installed and the mounting screws are in place)	SW1	PASS		25596	1/11/18
		SW2	PASS			
		SW3	PASS			
		SW4	PASS			

ID	Inspection Description	Component	Pass/Fail	DR #	Name/ Life #	Date
10c	**Proper mounting of Reed Switch** (Verify that both "Reed Switch" components are properly secured and all mounting hardware is in place)	Sensor	PASS		TO 25596	1/11/18
		Actuator	PASS			
10d	**Proper mounting of Mag-Lock Assembly.** (Verify Mag-Lock components are properly secured and all mounting hardware is in place)	Mag-Lock	PASS		TO 25596	1/11/18
		Armature	PASS			
10e	**Proper installation of the Striker (Elevator Bolt)** {Verify that each of the four Strikers have been secured in place with a "jam-nut" that has been tightened)	Striker	PASS		TO 25596	1/11/18

Notable Observations (if any)

Submitted By: [illegible] — *Print Name*

Tim Oldham 1/11/18 — *Signature / Date*

Approvals (ready for certification)

Cognizant Engineer: CHRISTOPHER ENG — *Approved By (Print Name)*

Christopher Eng 2/12/18 — *Signature / Date*

REV	DESCRIPTION	DATE	BY	CHECKED	APP
C	REVISED PER ECN LT-ECN-018-1885	02/09/2018	SEJ	JM	SB
A	INITIAL RELEASE	10/20/2014	AS/SEJ	JM	SB
B	REVISED PER ECN LT-ECN-017-1827	8/11/2017	SEJ	JM	SB

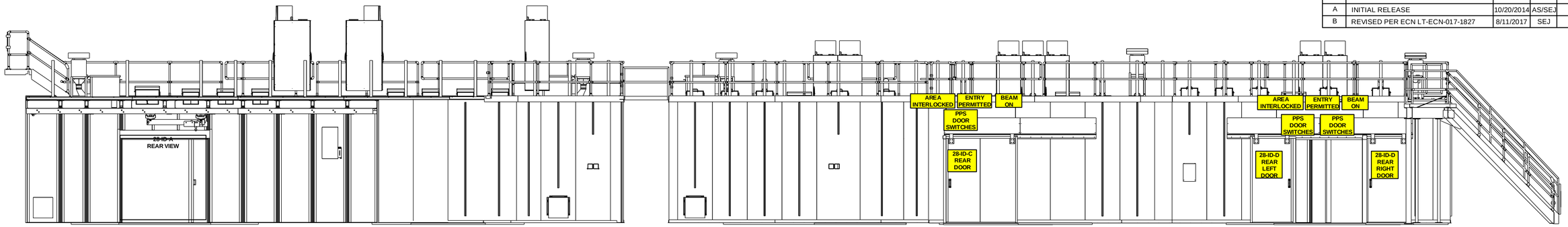

VIEW B-B

ROTATED 180 DEGREES

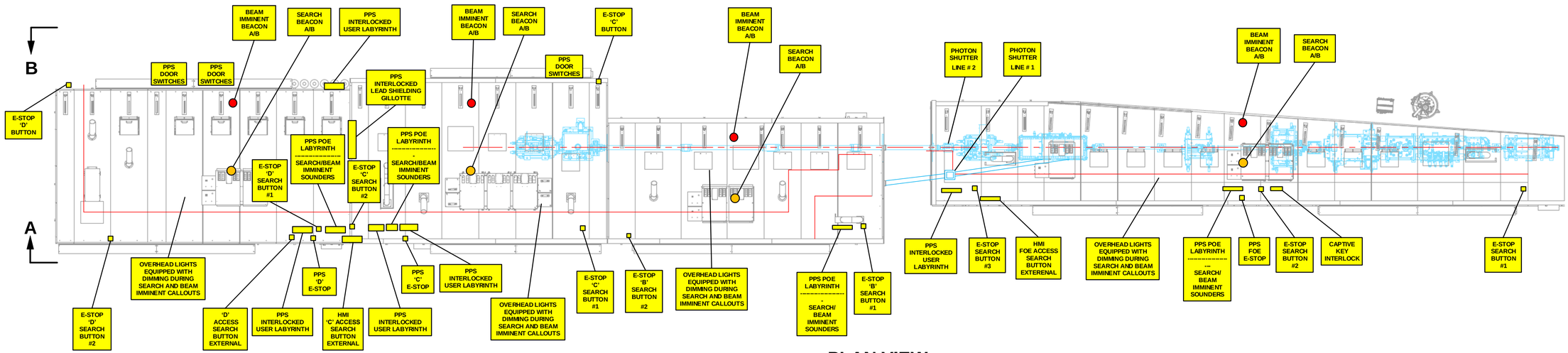

PLAN VIEW

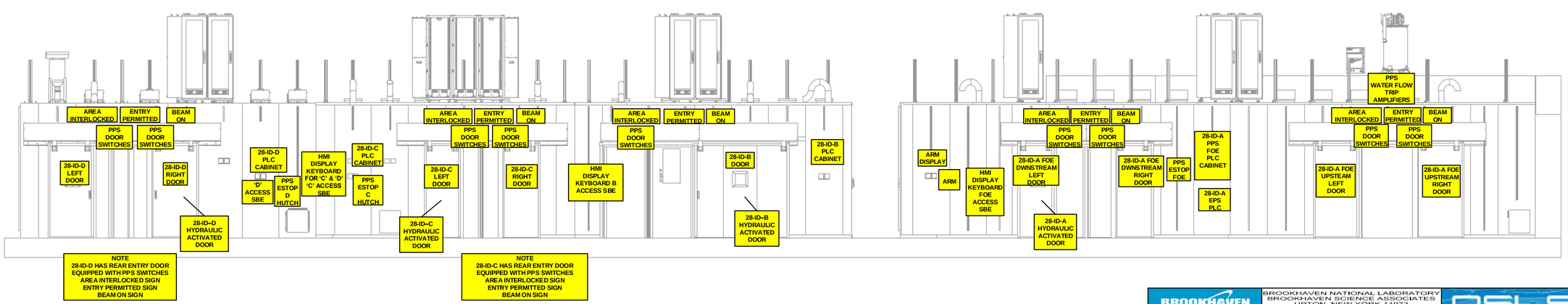

VIEW A-A

SB#- PPS SEARCH BUTTON AND EMERGENCY STOP
FOE – FORWARD OPTICAL ENCLOSURE
ARM – AREA RADATION MONITOR
PPS LIGHT – AREA INTERLOCKED (RED) ENTRY PERMITTED (GREEN) BEAM ON (RED)

JOB NUMBER	USED ON DWG. NO.

BROOKHAVEN NATIONAL LABORATORY

BROOKHAVEN NATIONAL LABORATORY
BROOKHAVEN SCIENCE ASSOCIATES
UPTON, NEW YORK 11973
Exploring Life's Mysteries, Protecting its Future

NSLS II NATIONAL SYNCHROTRON LIGHT SOURCE II

UNLESS OTHERWISE SPECIFIED
INTEGER TOLERANCES ± .06
DECIMAL TOLERANCES
.X ± .030
.XX ± .015
.XXX ± .010
ANGULAR TOLERANCE ± 0.5°
UNSPECIFIED RADII .02 MAX
125 BREAK SHARP CORNERS AND EDGES
FINISH MAX .03 MIN .005

UNLESS OTHERWISE SPECIFIED DIMENSIONS ARE IN INCHES DIMENSIONS IN [ ] ARE MILLIMETERS EQUIV. FOR REF. ONLY

ESH&Q RISK LEVEL A-2

INTERPRET DRAWING AS PER ANSI Y14.5 OR Y32.2

		DATE
DRWN BY	S. JARZABKOWSKI	10/20/2014
CHK BY	J. MALLEY	10/21/2014
ENG APP	S. BUDA	10/20/2014
SUPV APP	G. GANETIS	10/23/2014
QA APP	E. CHESWICK	10/21/2014
ESH APP	B. LEE	10/22/2014

OUTSTANDING ECN'S

EQUIPMENT LAYOUT DRAWING, FOR 28-ID HUTCH (XPD)

LT-EL-BL-EI
DRAWING DIRECTORY

LT-EL-BL-EI-HCH-1280
DRAWING NUMBER

REV C

COMPUTER REPRODUCABLE

SCALE: N/A

SHEET 1 OF 1

LT-EL-BL-EI-HCH-1280

Refer to PSD procedure "Preparing and Revising Drawings and Specifications" in the Photon Sciences Document Center for complete details and requirements for completing an ECR/ECN form. Contact the Quality Assurance Group for further guidance.

PHOTON SCIENCES DIRECTORATE
BROOKHAVEN NATIONAL LABORATORY

ENGINEERING CHANGE REQUEST/NOTICE

ECR/ECN NO. (Obtain from Quality Group): LT-ECR-018-1915

ESH&Q Risk Level: A1

SHEET 1 OF 9

DWG/SPEC NO. LT-EL-BL-EI-PPS-1280-70

REVISION FROM J TO K

DWG/SPEC TITLE PROGRAMMABLE LOGIC NSLS II A CHAIN BEAMLINE PPS PLC PROGRAM (28ID)

NEXT ASSEMBLY (USED ON) NO.

REASON FOR CHANGE:

1. 28ID_B Interlock signal from PPS to robot interface should have been wired to a safety output.

Small change date 2/27/18

Safety Signature Before AE66241C

Safety Signature After C99709A8

DESCRIPTION OF CHANGE:

1. Re-assign signal wired to standard output(Q132.6) to safety output(Q150.1)after field wring is updated.
2. Move this section of NW4 in OB1 to FB30.

(Continue on next page)

DRAWINGS AFFECTED

NOTE: EACH AFFECTED DRAWING TO BE DETAILED ON A SEPARATE ECR/ECN CONTINUATION SHEET (FORM QF-010A) BY THE DESIGN GROUP.

NUMBER	REVISION FROM	REVISION TO	NUMBER	REVISION FROM	REVISION TO
LT-EL-BL-EI-PPS-1280-95	A	B			

APPROVAL

REQUESTOR	(Print Name) E. Orr	/(Signature)	DATE: 2/22/18
CE/CS	(Print Name) S. Buda	/(Signature)	DATE: 2/22/18
GROUP LEADER	(Print Name) G. Ganetis	/(Signature)	DATE: 2/27/18
AUTHORIZ. BASIS MGR.	(Print Name) S. Moss	/(Signature)	DATE: 2-27-18
TECH. AUTHORITY (A-1)	(Print Name) S. Buda	/(Signature)	DATE: 2/22/18
ES&H COORDINATOR	(Print Name) B. Lee	/(Signature)	DATE: 2-27-18
QUALITY REP.	(Print Name) E. Cheswick	/(Signature)	DATE: 2/27/18
DIVISION DIRECTOR	(Print Name) T. Shaftan	/(Signature)	DATE: 2/28/18

DESCRIPTION OF CHANGE (CONT'D):	ECR/ECN NO. LT-ECR-018-1915 SHEET 2 OF 9

IMPACT: (DEFINE ANY IMPACT ON COST, SCHEDULE OR ESH&Q RISK LEVEL)

Partial certification scheduled for 2/27/2018

EFFECTIVITY POINT:

2/27/2018

DISPOSITION OF MATERIALS

DESCRIPTION	RECORD CHANGE	PARTS COMPLY	USE-AS-IS	REWORK	SCRAP	REPAIR	
PROCUREMENT CYCLE	☐	☐	☐	☐	☐	☐	☐
IN PROGRESS AT BNL	☐	☐	☐	☐	☐	☐	☐
COMPLETED ITEMS	☐	☐	☐	☐	☐	☐	☐
INSTALLED ITEMS	☐	☐	☐	☒	☐	☐	☐
	☐	☐	☐	☐	☐	☐	☐
	☐	☐	☐	☐	☐	☐	☐

ECR CONCURRENCE	AGREE	DISAGREE	APPROVED DOCUMENT DISTRIBUTION LIST
	T.M 2/27		

REJECTION

REJECTED BY	DATE
REASON	
APPEALED BY	DATE
REVIEW DECISION	

ECN INCORPORATED BY	DATE 3/1/18
CHECKED BY	DATE 3/1/18

Please forward completed original to the Quality Assurance Group

Sheet 3 OF 9 ECN# LT-ECR-018-1915

FIRMWARE/SOFTWARE/PROGRAMMING LOGIC

DESCRIPTION:

28-ID A CHAIN BEAMLINE PPS PLC PROGRAM

PROGRAM	SIEMENS TIA PORTAL	
VERSION	VERSION 13 + SP1	
DEVICE	SIEMENS IM151F-8-F CPU	
OPERATING SYSTEM	WINDOWS	
PROGRAMMING METHOD	LADDER LOGIC	
FILE	NSLS II Beamline_ID28 Rev J	
SAFETY SIGNATURE	AE66241C C997 09A8	

REV	DESCRIPTION	BY	DATE	CHK	APP
A	INITIAL RELEASE	SB	10/21/14	MP	SB
B	REVISED PER ECN# 015-1115	MP	02/09/15	JM	SB
C	REVISED PER ECN# 015-1131	MP	02/13/15	JM	SB
D	REVISED PER ECN# 015-1158	MP	09/10/15	JM	SB
E	REVISED PER ECN# 015-1251	MP	09/12/15	JM	SB
F	REVISED PER ECN# 016-1344	MP	04/13/16	JM	SB
G	REVISED PER ECN# 016-1462	MP	05/16/16	JM	SB
H	REVISED PER ECN# 017-1716	MP	01/06/17	JM	SB
J	REVISED PER ECN# 018-1871	MP	01/16/18	JM	SB
K	Revised per ECN # 018-1915				

LT-EL-BL-EI-PPS-1280-70

BROOKHAVEN NATIONAL LABORATORY

BROOKHAVEN NATIONAL LABORATORY
BROOKHAVEN SCIENCE ASSOCIATES
UPTON, NEW YORK 11973
Exploring Life's Mysteries, Protecting its Future

NSLSII NATIONAL SYNCHROTRON LIGHT SOURCE II

UNLESS OTHERWISE SPECIFIED
INTEGER TOLERANCES ± .06
DECIMAL TOLERANCES
.X ± .030
.XX ± .015
.XXX ± .010
ANGULAR TOLERANCE ± 0.5°
UNSPECIFIED RADII .02 MAX
125 BREAK SHARP CORNERS AND EDGES
FINISH MAX .03 MIN .005

UNLESS OTHERWISE SPECIFIED DIMENSIONS ARE IN INCHES DIMENSIONS IN [* **] ARE MILLIMETERS EQUIV. FOR REF. ONLY

ESH&Q RISK LEVEL A-1

INTERPRET DRAWING AS PER ANSI Y14.5 OR Y32.2

OUTSTANDING ECN'S

		DATE
DRWN BY	S.BUDA	10/21/14
CHK BY	M.PFEFFER	10/21/14
ENG APP	S.BUDA	10/21/14
SUPV APP	G.GANETIS	10/23/14
QA APP	E.CHESWICK	10/22/14
ESH APP	B.LEE	10/22/14

PROGRAMMABLE LOGIC
NSLS-II A CHAIN BEAMLINE PPS
PLC PROGRAM (28-ID)

LT-EL-BL-EI (DRAWING DIRECTORY) | LT-EL-BL-EI-PPS-1280-70 (DRAWING NUMBER) | J (REV)

COMPUTER REPRODUCIBLE | SCALE: N/A | SHEET 1 OF 1

JOB NUMBER | USED ON DWG NO

Sheet 4 OF 9

ECN # LT-ECR -018-1915

NSLS II Beamline_ID28 Rev J_V13_SP1 ▸ ID28 PPS PLC [IM151-8 F-CPU] ▸ Program blocks ▸ 28ID MAIN STANDARD [OB1]

Block interface

Network 4: 28ID_C SIGNALS SENT TO C CHAIN (EPS)

Comment

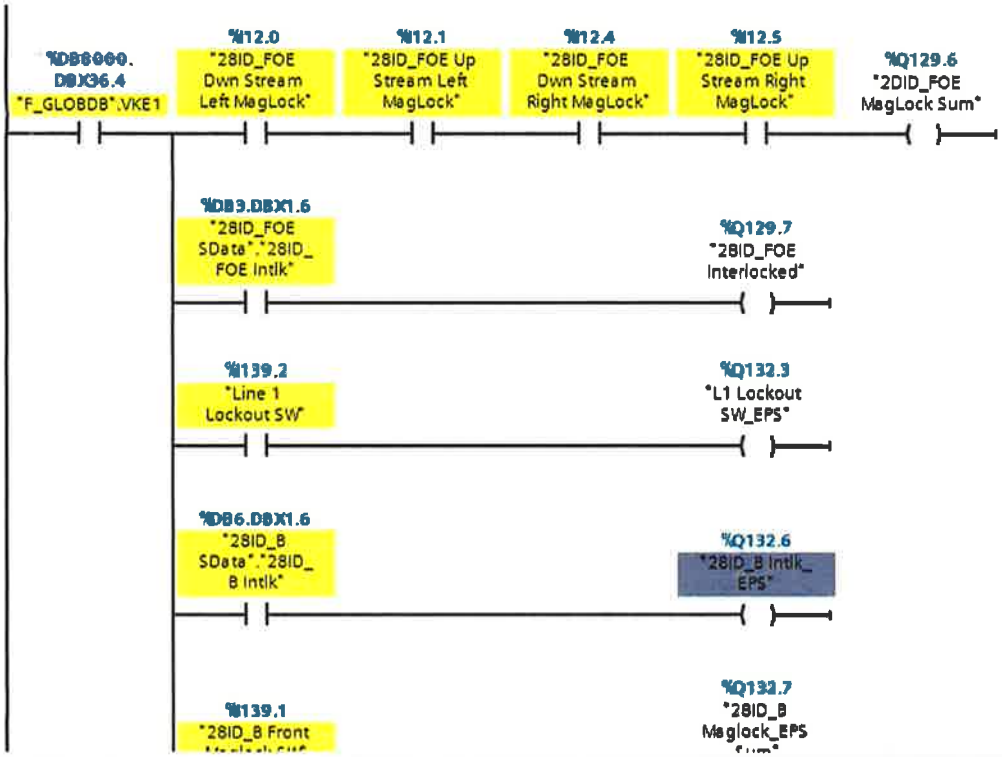

100%

LI-ECR-018-1915

NSLS II Beamline_ID28 Rev J_V13_SP1 ▸ ID28 PPS PLC [IM151-8 F CPU] ▸ Program blocks ▸ 28ID_B Safety Main [FB30]

28ID_B Safety Main

	Name	Data type	Offset	Default value	Visible in ...	Setpoint	Comment
1	Input						
2	<Add new>						
3	Output						

Block title: 28ID SAFETY MAIN

Comment

Network 1: 28ID_B MAGNETIC LOCK DELAY TO OFF

Network 2: 28ID_B MAGNETIC LOCK RELAY

Network 3: 28ID_B DOOR INHIBIT RELAY

Network 4: 28ID_B INTERLOCKED

Network 5: 28ID_B INTERLOCKED SIGN

Network 6: 28ID_B BEAM ON & ENTRY PERMITTED

Network 7: 28ID_B ACCESS

100%

Sheet 6 OF 9 AFTER

ECN # LT-ECR-018-1915

Block Interface

Network 4: 28ID_C SIGNALS SENT TO C CHAIN (EPS)

Comment

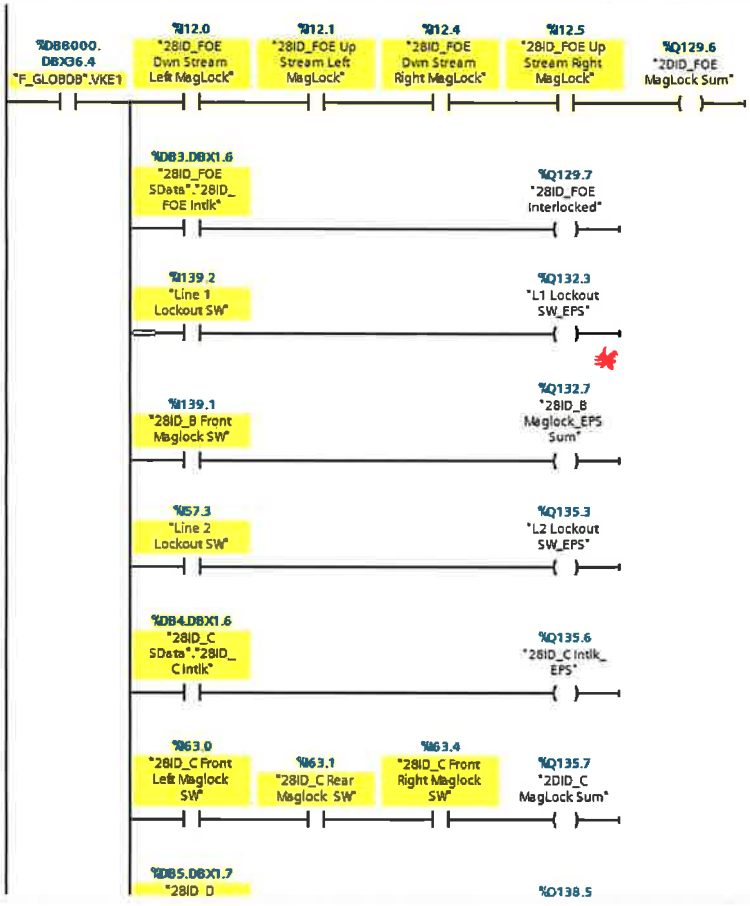

G. Ganetis witnessed this change [signature] 2/27/14

28ID_B Safety Main

	Name	Data type	Offset	Default value	Visible in ...	Setpoint	Comment
1	Input						
2	<Add new>						
3	Output						

Block title: 28ID SAFETY MAIN

Comment

Network 1: 28ID_B MAGNETIC LOCK DELAY TO OFF

Network 2: 28ID_B MAGNETIC LOCK RELAY

Network 3: 28ID_B DOOR INHIBIT RELAY

Network 4: 28ID C Secure satus to EPS

Comment

G. Garetis witnessed this change 2/27/18

Network 5: 28ID_B INTERLOCKED

Network 6: 28ID_B INTERLOCKED SIGN

Network 7: 28ID_B BEAM ON & ENTRY PERMITTED

Network 8: 28ID_B ACCESS

Sheet 7 OF 9 After

ECN # LT-ECR-018-1915

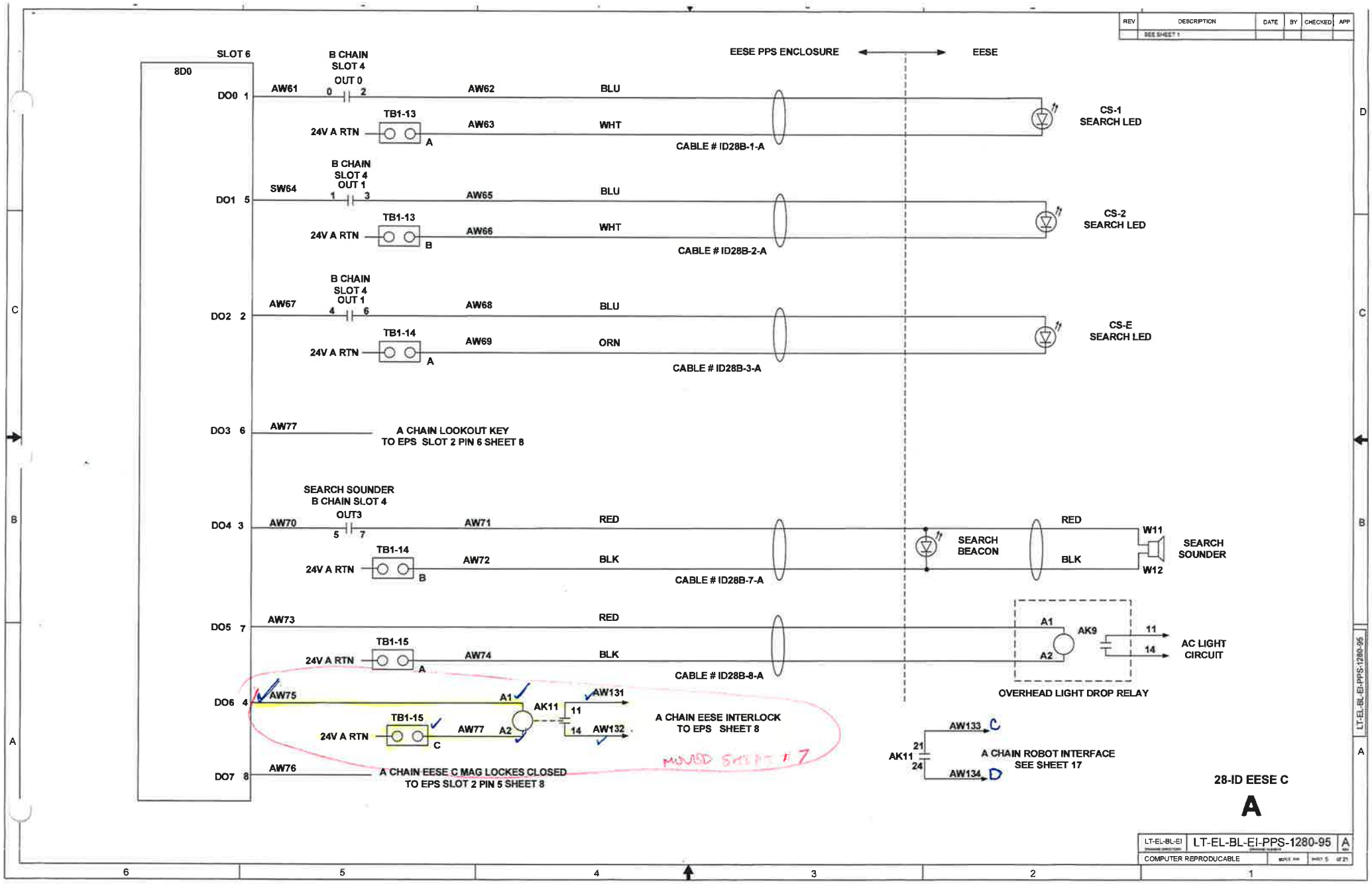

Sheet 8 OF 9

ECN # LT-ECR-018-1915

REV	DESCRIPTION	DATE	BY	CHECKED	APP
	SEE SHEET 1				

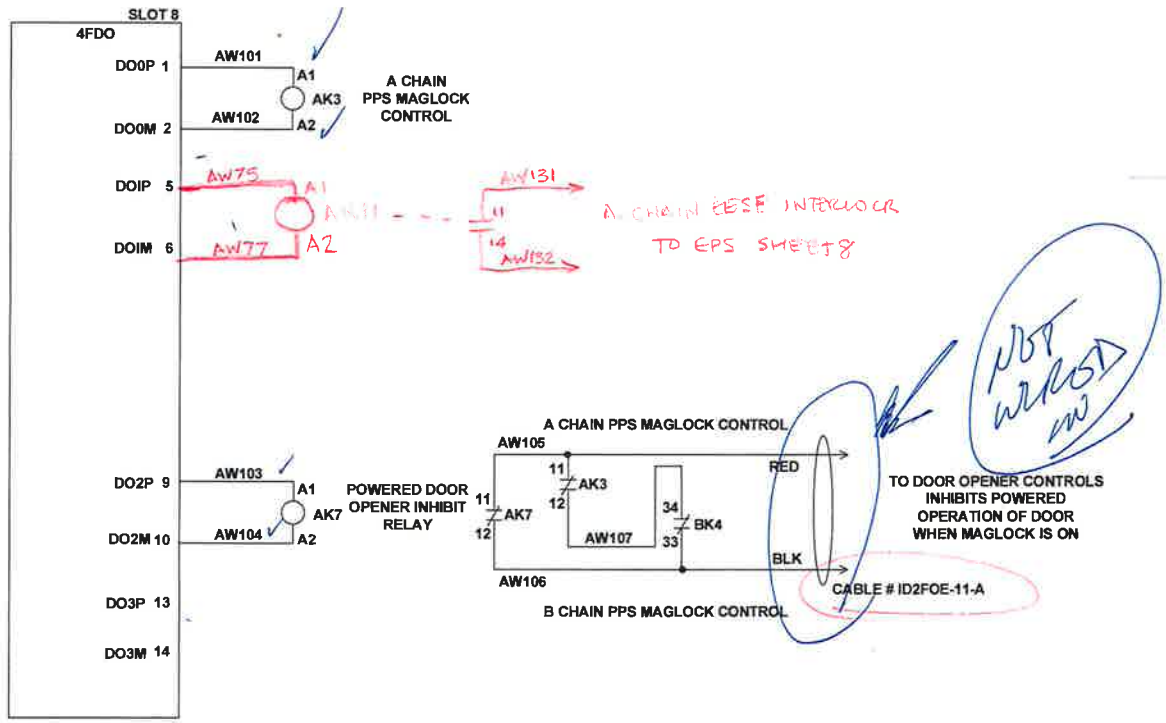

A

LT-EL-BL-EI	LT-EL-BL-EI-PPS-1280-95	A
COMPUTER REPRODUCABLE	SCALE N/A	SHEET 7 of 21

LT-EL-BL-EI-PPS-1280-95

Sheet 9 OF 9

ECN # LT-CR-018-1915

FIRMWARE/SOFTWARE/PROGRAMMING LOGIC

DESCRIPTION:

FRONT END PPS MAIN CPU PROGRAM PENTANT 1 A CHAIN

PROGRAM	**SIEMANS STEP 7**	
VERSION	**VERSION 5.5 + SP4**	
DEVICE	**SIEMENS CPU319F-3-PN/DP**	
OPERATING SYSTEM	**WINDOWS**	
PROGRAMMING METHOD	**LADDER LANGUAGE**	
FILE		

REV	DESCRIPTION	BY	DATE	CHK	APP
A	INITIAL RELEASE	MP	12/15/14	JM	SB
B	REVISED PER ECN# 015-1111	MP	02/09/15	JM	SB
C	REVISED PER ECN# 015-1289	MP	10/09/15	JM	SB
D	REVISED PER ECN# 018-1869	MP	12/18/18	JM	SB

LT-EL-BL-EI-PPS-0101-70

BROOKHAVEN NATIONAL LABORATORY

BROOKHAVEN NATIONAL LABORATORY
BROOKHAVEN SCIENCE ASSOCIATES
UPTON, NEW YORK 11973
Exploring Life's Mysteries, Protecting its Future

NSLS II
NATIONAL SYNCHROTRON LIGHT SOURCE II

UNLESS OTHERWISE SPECIFIED
INTEGER TOLERANCES
± .06
DECIMAL TOLERANCES
.X ± .030
.XX ± .015
.XXX ± .010
ANGULAR TOLERANCE ± 0.5°
UNSPECIFIED RADII .02 MAX
125 BREAK SHARP CORNERS AND EDGES
FINISH MAX .03 MIN .005

UNLESS OTHERWISE SPECIFIED
DIMENSIONS ARE IN INCHES
DIMENSIONS IN [.**] ARE
MILLIMETERS EQUIV. FOR REF. ONLY

INTERPRET DRAWING AS PER
ANSI Y14.5 OR Y32.2

ESH&Q RISK LEVEL A-1

OUTSTANDING ECN'S

		DATE
DRWN BY	S.BUDA	12/15/14
CHK BY	M.PFEFFER	12/15/14
ENG APP	S.BUDA	12/15/14
SUPV APP	G.GANETIS	01/07/15
QA APP	E.CHESWICK	12/15/14
ESH APP	B.LEE	12/16/14

PROGRAMMABLE LOGIC

NSLS-II-PENTANT 1 FRONT END PPS CPU A CHAIN

LT-EL-BR-IN — DRAWING DIRECTORY
LT-EL-BL-EI-PPS-0101-70 — DRAWING NUMBER
D — REV

COMPUTER REPRODUCIBLE
SCALE: N/A
SHEET 1 OF 1

JOB NUMBER
USED ON DWG. NO.

FIRMWARE/SOFTWARE/PROGRAMMING LOGIC

DESCRIPTION:

FRONT END PPS MAIN CPU PROGRAM PENTANT 1 B CHAIN

PROGRAM	**RS LOGIX 5000**	
VERSION	**20.03**	
DEVICE	**ALLEN BRADLEY 1768-L43S**	
OPERATING SYSTEM	**WINDOWS**	
PROGRAMMING METHOD	**ETHERNET**	
FILE	**LT-EL-BL-EI-PPS-0101-80-E.ACD**	

REV	DESCRIPTION	BY	DATE	CHK	APP
A	INITIAL RELEASE	SB	10/23/14	MP	SB
B	REVISED PER ECN# 015-1108	SB	02/05/15	MP	SB
C	REVISED PER ECN# 015-1211	SB	06/30/15	MP	SB
D	REVISED PER ECN# 015-1302	SB	10/09/15	MP	SB
E	REVISED PER ECN# 018-1879	SB	12/20/17	MP	SB

LT-EL-BL-EI-PPS-0101-80

BROOKHAVEN NATIONAL LABORATORY

BROOKHAVEN NATIONAL LABORATORY
BROOKHAVEN SCIENCE ASSOCIATES
UPTON, NEW YORK 11973
Exploring Life's Mysteries, Protecting its Future

NSLS II
NATIONAL SYNCHROTRON LIGHT SOURCE II

UNLESS OTHERWISE SPECIFIED
INTEGER TOLERANCES
± .06
DECIMAL TOLERANCES
.X ± .030
.XX ± .015
.XXX ± .010
ANGULAR TOLERANCE ± 0.5°
UNSPECIFIED RADII .02 MAX
125 BREAK SHARP CORNERS AND EDGES
FINISH MAX .03 MIN .005

UNLESS OTHERWISE SPECIFIED DIMENSIONS ARE IN INCHES DIMENSIONS IN [*.**] ARE MILLIMETERS EQUIV. FOR REF. ONLY

ESH&Q RISK LEVEL A-1

INTERPRET DRAWING AS PER ANSI Y14.5 OR Y32.2

		DATE	OUTSTANDING ECN'S
DRWN BY	S.BUDA	10/23/14	
CHK BY	M.PFEFFER	11-17-14	
ENG APP	S.BUDA	11-17-14	
SUPV APP	G.GANETIS	12-01-14	
QA APP	E.CHESWICK	11-19-14	
ESH APP	B.LEE	11-20-14	

PROGRAMMABLE LOGIC

NSLS-II-FRONT END PPS MAIN CPU PROGRAM PENTANT 1 B CHAIN

LT-EL-BL-IN	LT-EL-BL-EI-PPS-0101-80	E
DRAWING DIRECTORY	DRAWING NUMBER	REV

COMPUTER REPRODUCIBLE | SCALE: N/A | SHEET 1 OF 1

JOB NUMBER	USED ON DWG. NO.

FIRMWARE/SOFTWARE/PROGRAMMING LOGIC

DESCRIPTION:

28-ID A CHAIN BEAMLINE PPS PLC PROGRAM

PROGRAM	**SIEMENS TIA PORTAL**	
VERSION	**VERSION 13 + SP1**	
DEVICE	**SIEMENS IM151F-8-F CPU**	
OPERATING SYSTEM	**WINDOWS**	
PROGRAMMING METHOD	**LADDER LOGIC**	
FILE	**NSLS II Beamline_ID28 Rev J**	
SAFETY SIGNATURE	**C99709A8**	

REV	DESCRIPTION	BY	DATE	CHK	APP
A	INITIAL RELEASE	SB	10/21/14	MP	SB
B	REVISED PER ECN# 015-1115	MP	02/09/15	JM	SB
C	REVISED PER ECN# 015-1131	MP	02/13/15	JM	SB
D	REVISED PER ECN# 015-1158	MP	09/10/15	JM	SB
E	REVISED PER ECN# 015-1251	MP	09/12/15	JM	SB
F	REVISED PER ECN# 016-1344	MP	04/13/16	JM	SB
G	REVISED PER ECN# 016-1462	MP	05/16/16	JM	SB
H	REVISED PER ECN# 017-1716	MP	01/06/17	JM	SB
J	REVISED PER ECN# 018-1871	MP	01/16/18	JM	SB
K	REVISED PER ECN# 018-1915	MP	03/01/2018	JM	SB

LT-EL-BL-EI-PPS-1280-70

BROOKHAVEN NATIONAL LABORATORY

BROOKHAVEN NATIONAL LABORATORY
BROOKHAVEN SCIENCE ASSOCIATES
UPTON, NEW YORK 11973
Exploring Life's Mysteries, Protecting its Future

NSLS II
NATIONAL SYNCHROTRON LIGHT SOURCE II

UNLESS OTHERWISE SPECIFIED
INTEGER TOLERANCES
± .06
DECIMAL TOLERANCES
.X ± .030
.XX ± .015
.XXX ± .010
ANGULAR TOLERANCE ± 0.5°
UNSPECIFIED RADII .02 MAX
125 BREAK SHARP CORNERS AND EDGES
FINISH MAX .03 MIN .005

UNLESS OTHERWISE SPECIFIED DIMENSIONS ARE IN INCHES DIMENSIONS IN [*.**] ARE MILLIMETERS EQUIV. FOR REF. ONLY

ESH&Q RISK LEVEL A-1

INTERPRET DRAWING AS PER ANSI Y14.5 OR Y32.2

		DATE
DRWN BY	S.BUDA	10/21/14
CHK BY	M.PFEFFER	10/21/14
ENG APP	S.BUDA	10/21/14
SUPV APP	G.GANETIS	10/23/14
QA APP	E.CHESWICK	10/22/14
ESH APP	B.LEE	10/22/14

OUTSTANDING ECNS -

PROGRAMMABLE LOGIC
NSLS-II A CHAIN BEAMLINE PPS PLC PROGRAM (28-ID)

LT-EL-BL-EI — DRAWING DIRECTORY
LT-EL-BL-EI-PPS-1280-70 — DRAWING NUMBER
K — REV

COMPUTER REPRODUCIBLE
SCALE: N/A
SHEET 1 OF 1

JOB NUMBER
USED ON DWG. NO.

FIRMWARE/SOFTWARE/PROGRAMMING LOGIC

DESCRIPTION:

28-ID B CHAIN BEAMLINE PPS PLC PROGRAM

PROGRAM	**RSLOGIX**	
VERSION	**20.03**	
DEVICE	**ALLEN BRADLEY 1768-L43S**	
OPERATING SYSTEM	**WINDOWS**	
PROGRAMMING METHOD	**ETHERNET**	
FILE	**LT-EL-BL-EI-PPS-0228-71-F.ACD**	

REV	DESCRIPTION	BY	DATE	CHK	APP
A	INITIAL RELEASE	SB	10/21/14	MP	SB
B	REVISED PER ECN # 015-1106	SB	10/21/14	MP	SB
C	REVISED PER ECN # 015-1155	SB	09/14/15	MP	SB
D	REVISED PER ECN # 015-1159	SB	10/19/15	MP	SB
E	REVISED PER ECN # 015-1270	SB	10/19/15	MP	SB
F	REVISED PER ECN # 018-1844	SB	01/16/18	MP	SB

LT-EL-BR-EI-PPS-1280-71

BROOKHAVEN NATIONAL LABORATORY

BROOKHAVEN NATIONAL LABORATORY
BROOKHAVEN SCIENCE ASSOCIATES
UPTON, NEW YORK 11973
Exploring Life's Mysteries, Protecting its Future

NSLS II
NATIONAL SYNCHROTRON LIGHT SOURCE II

UNLESS OTHERWISE SPECIFIED
INTEGER TOLERANCES ± .06
DECIMAL TOLERANCES
.X ± .030
.XX ± .015
.XXX ± .010
ANGULAR TOLERANCE ± 0.5°
UNSPECIFIED RADII .02 MAX
125 BREAK SHARP CORNERS AND EDGES
FINISH MAX .03 MIN .005

UNLESS OTHERWISE SPECIFIED DIMENSIONS ARE IN INCHES DIMENSIONS IN [*.**] ARE MILLIMETERS EQUIV. FOR REF. ONLY

ESH&Q RISK LEVEL A-1

INTERPRET DRAWING AS PER ANSI Y14.5 OR Y32.2

		DATE	OUTSTANDING ECN'S
DRWN BY	S.BUDA	10/21/14	
CHK BY	M.PFEFFER	10/21/14	
ENG APP	S.BUDA	10/21/14	
SUPV APP	G.GANETIS	10/23/14	
QA APP	E.CHESWICK	10/22/14	
ESH APP	B.LEE	10/22/14	

PROGRAMMABLE LOGIC
NSLS-II B CHAIN BEAMLINE PPS
PLC PROGRAM (28-ID)

LT-EL-BL-EI	LT-EL-BL-EI-PPS-1280-71	F
DRAWING DIRECTORY	DRAWING NUMBER	REV

COMPUTER REPRODUCIBLE | SCALE: N/A | SHEET 1 OF 1

JOB NUMBER	USED ON DWG. NO.