REVISION HISTORY					
REV	DESCRIPTION	DATE	DESIGNER	CHECKED BY	ENGINEER
A	INITIAL RELEASE PER ECO-000259	08/22/2011	A.DESANTIS	J.FABIJANIC	S.GHOSE
B	REVISION PER ECO-002097	08/2014	A.DESANTIS	J.FABIJANIC	H.WANG
C	REVISION PER ECO-002975	03/2015	C. STELMACH	C. AMARITO	H.WANG
D	REVISION PER ECO-003084	04/2015	C. STELMACH	C. AMARITO	H.WANG
E	REVISION PER ECO-004851	02/2017	C. STELMACH	J.FABAJANIC	E.HAAS

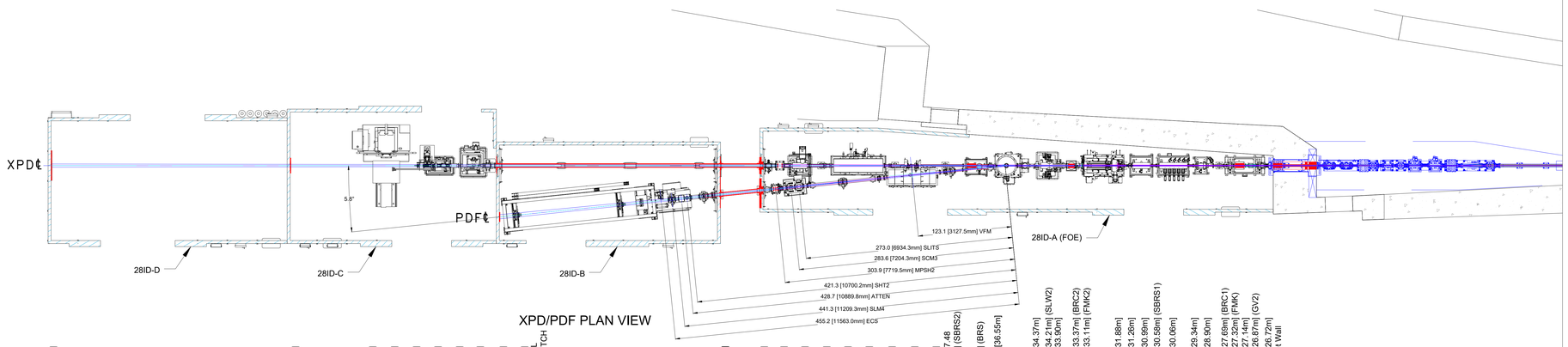

XPD/PDF PLAN VIEW

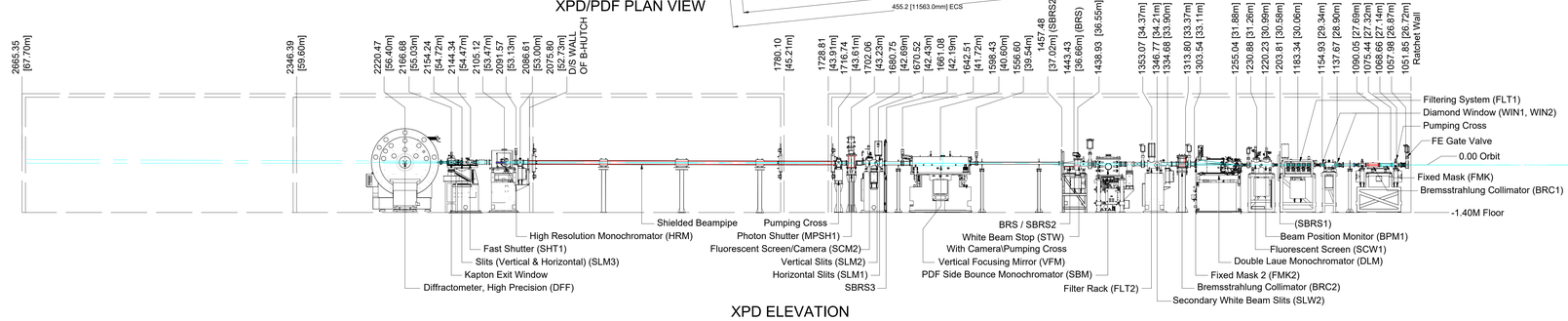

XPD ELEVATION

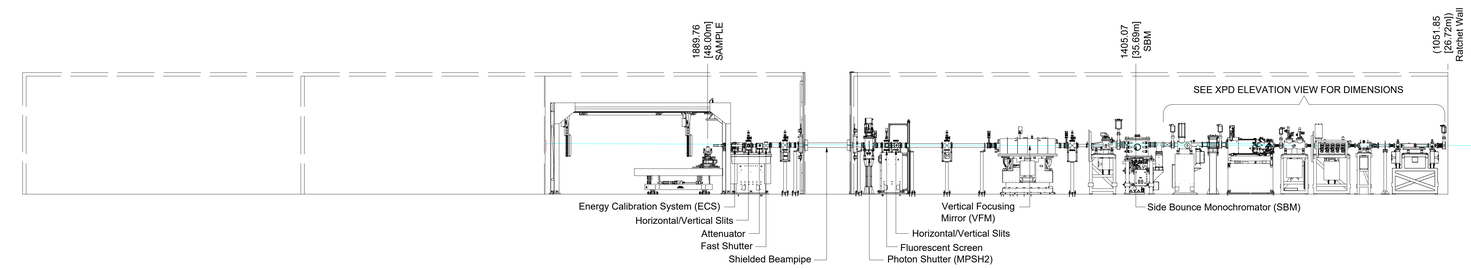

PDF ELEVATION

NOTE:
1. THE CENTER OF STRAIGHT IS THE ORIGIN FOR ALL DIMENSIONS UNLESS OTHERWISE NOTED.
2. BENDING MAGNET FAN NOT SHOWN, LAYOUT TO BE SUPPLIED BY VACUUM GROUP.
3. ALL SECONDARY BREMSSTRAHLUNG SHIELDS ARE DIMENSIONED ON THE BREMSSTRAHLUNG SHEETS.

XPD SPECIFICATIONS		SPEC REFERENCE
Project	"Project Beamline	LT-C-XFD-RSI-1.04.06
Beam Line Name	X-Ray Powder Diffraction	LT-C-XFD-RSI-1.04.06
Abbreviation	XPD	LT-C-XFD-RSI-1.04.06
Source	Damping Wiggler (DW)	LT-C-XFD-RSI-1.04.06
Period of insertion device	100	LT-C-XFD-RSI-1.04.06
Long / Short Straight	LONG	LT-CXFD-RSI-1.04.06
Canting Angle	NONE	LT-C-XFD-RSI-1.04.06
Length of Source	2X 3500 mm	LT-C-XFD-RSI-1.04.06
Location of Center of Source 1 (From Center of Straight)	-1890.5	SR-ID-DW-1001
Location of Center of Source 2 (From Center of Straight)	1890.5	SR-ID-DW-1001
Nominal Radiation Fan (Horizontal)	6.47 mrad	LT-C-XFD-RSI-1.04.06
Nominal Radiation Fan (Vertical)	0.87 mrad	LT-C-XFD-RSI-1.04.06
Fixed Aperture Mask, Outboard Downstream, Aperture (Horizontal)	1.1 mrad	LT-C-XFD-RSI-1.04.06
Fixed Aperture Mask, Outboard Downstream, Aperture (Vertical)	0.15 mrad	LT-C-XFD-RSI-1.04.06
Ray Tracing Procedure		PS-C-XFD-PRC-008 (VERISION 2)
Front End Ray Tracing Drawing		SR-FE-DWN0-1201 (REV. D)

PDF SPECIFICATIONS		SPEC REFERENCE
Project	BDN BEAMLINE	LT-C-XFD-RSI-1.04.06
Beam Line Name	Pair Distribution Function	LT-C-XFD-RSI-1.04.06
Abbreviation	PDF	LT-C-XFD-RSI-1.04.06
Source	Damping Wiggler (DW)	LT-C-XFD-RSI-1.04.06
Period of insertion device	100	LT-C-XFD-RSI-1.04.06
Long / Short Straight	LONG	LT-CXFD-RSI-1.04.06
Canting Angle	NONE	LT-C-XFD-RSI-1.04.06
Length of Source	2X 3500 mm	LT-C-XFD-RSI-1.04.06
Location of Center of Source 1 (From Center of Straight)	-1890.5	SR-ID-DW-1001
Location of Center of Source 2 (From Center of Straight)	1890.5	SR-ID-DW-1001
Nominal Radiation Fan (Horizontal)	6.47 mrad	LT-C-XFD-RSI-1.04.06
Nominal Radiation Fan (Vertical)	0.87 mrad	LT-C-XFD-RSI-1.04.06
Fixed Aperture Mask, Outboard Downstream, Aperture (Horizontal)	1.1 mrad	LT-C-XFD-RSI-1.04.06
Fixed Aperture Mask, Outboard Downstream, Aperture (Vertical)	0.15 mrad	LT-C-XFD-RSI-1.04.06
Ray Tracing Procedure		PS-C-XFD-PRC-008 (VERISION 2)
Front End Ray Tracing Drawing		SR-FE-DWN0-1201 (REV. D)

ABBREVIATIONS:

ATTEN - ATTENUATOR
BRC - BREMSSTRAHLUNG COLLIMATOR
BRS - BREMSSTRAHLUNG STOP
DIFF - DIFFRACTOMETER
DS - DOWNSTREAM
ECS - ENERGY CALIBRATION SYSTEM
FE - FRONT END
FLT - FILTER
FMK - FIXED MASK
GV - GATE VALVE
HRM - HIGH RESOLUTION MONOCHROMATOR
MPSH - MONOCHROMATIC PHOTON SHUTTER
SBM - SIDE BOUNCE MONOCHROMATOR
SBRS - SECONDARY BREMSSTRAHLUNG STOP
SCM - MONOCHROMATIC FLUORESCENT SCREEN
SCW - WHITE BEAM FLFLUORESCENT SCREEN
SHT - FAST SHUTTER
SLM - MONOCHROMATIC SLITS
SLW - WHITE BEAM SLITS
STW - WHITE BEAM STOP
US - UPSTREAM
VFM - VERTICAL FOCUSING MIRROR

XPD/PDF BEAMLINES, 28-ID
SCALE: 1:50

UNLESS OTHERWISE SPECIFIED ALL MATERIALS TO BE WHOLE DIMENSIONS ARE FINISHED VALUES (NO STOCK PRESENT) ARE MILLIMETERS AND ARE FOR REFERENCE ONLY INTERPRET DRAWING AS PER ANSI Y14.5-1994 OR Y32.3-1975

DIMENSIONAL TOLERANCING: X ± 0.080, X ± 0.030, XX ± 0.015, XXX ± 0.005; ANGULAR TOLERANCE ± 0°; FINISH 125√; BREAK EDGES & SHARP CORNERS 0.005 MIN. TO 0.030 MAX.

NEXT ASSY:
PROJECT: 71656
THIRD ANGLE PROJECTION
SCALE: AS NOTED
WBS# 1.04.05.06.01

BROOKHAVEN NATIONAL LABORATORY
BROOKHAVEN SCIENCE ASSOCIATES
UPTON, NEW YORK 11973
Exploring Life's Frontiers
Protecting the Future

DRAWN BY	A.DESANTIS	08.22.11
CHECKED BY	J.FABIJANIC	09.11
SECTION HEAD APPROVAL	E.DOORYHEE	09.11
ENGINEER APPROVAL	S. GHOSE	09.11
ESH APPROVAL	A.BROADBENT	09.11
ESH&Q APPROVAL	J.DANA	09.11
RADIATION SAFETY	F.X. JOB	09.11

NSLS II NATIONAL SYNCHROTRON LIGHT SOURCE II
PHOTON DIVISION
28ID, XPD/PDF BEAMLINES
RAYTRACE LAYOUT
SHEET SIZE: E
DRAWING/PART NUMBER: PD-XPD-RAYT-0001
REVISION: E
ESH&Q RISK LEVEL: A1
SHEET 1 OF 12

RELEASED – EFFECTIVE

TABLE OF TOLERANCED DIMENSIONS (mm)										
LINE	DESCRIPTION	NOMINAL	±	FABRICATION	±	POSITION	±	CLEARANCE	=	TOTAL
1	FMK U/S APERTURE	45.00	-	0.10	-	0.10		2.17	=	44.80 MIN
2	FMK BEAM DEFINING APERTURE	30.35	+	0.36	+	0.44		-	=	31.15 MAX
3	BRC1 BEAM TUBE ID	33.47	+	0.50	+	0.10		0.26	=	34.07 MAX
4	FMK2 U/S APERTURE	54.51	-	0.10	-	0.10		.598 IB/.656 OB	=	54.31 MIN
5	FMK2 BEAM DEFINING APERTURE	37.95	+	0.10	+	0.10		-	=	38.15 MAX
6	BRC2 (W)	41.92	-	0.36	-	0.28		.816 IB/.776 OB	=	41.28 MIN
7	PHOTON SHUTTER APERTURE	40.00	+	0.36	+	0.44		-	=	40.80 MAX

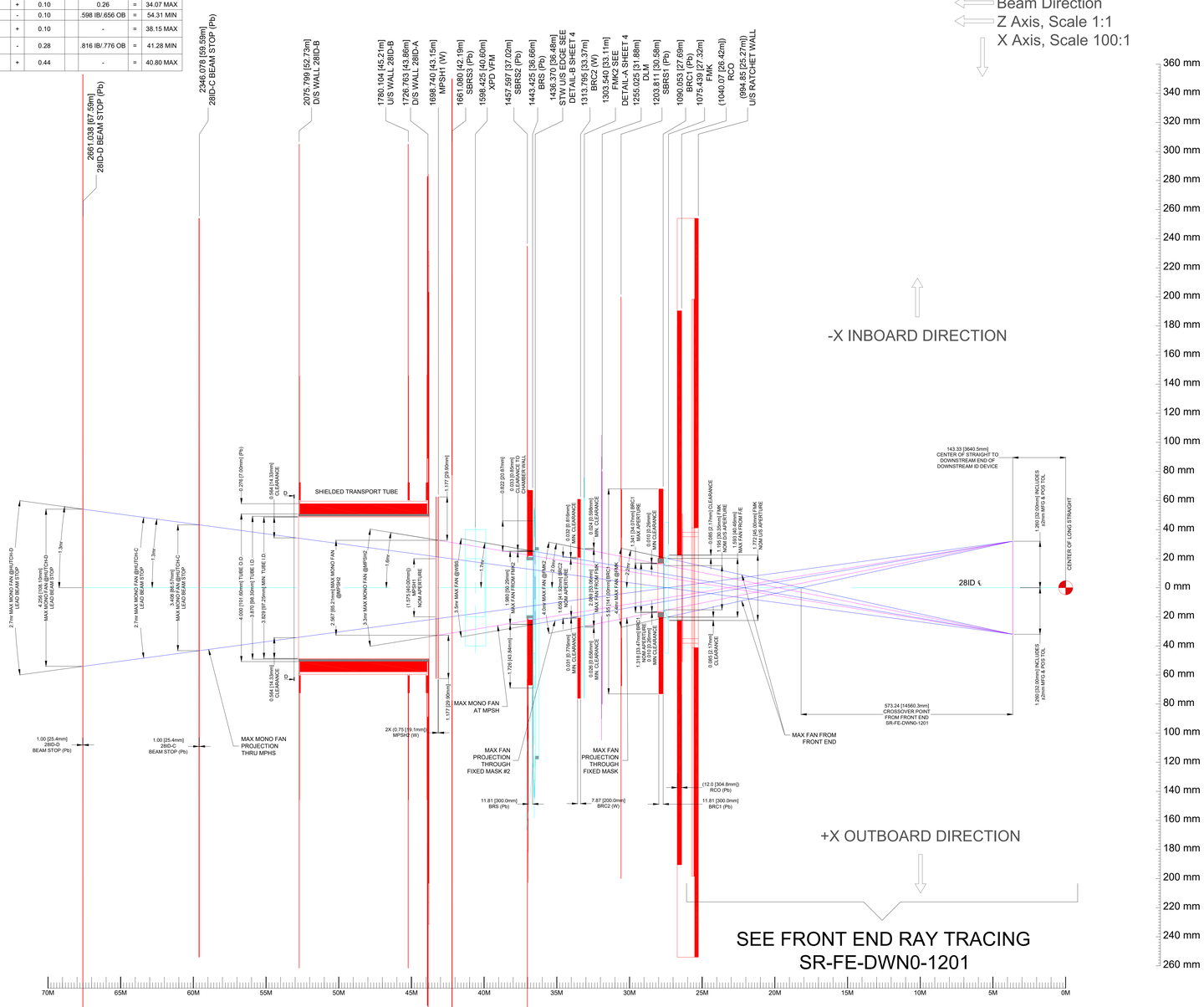

MAX SYNCHROTRON HORIZONTAL
XPD BEAMLINE
SCALE: = 1:100

E	PD-XPD-RAYT-0001	E
SHEET SIZE	DRAWING/PART NUMBER	REVISION
ESH&Q RISK LEVEL A1		SHEET 2 OF 12

RELEASED – EFFECTIVE

TABLE OF TOLERANCED DIMENSIONS (mm)										
LINE	DESCRIPTION	NOMINAL	±	FABRICATION	±	POSITION	±	CLEARANCE	=	TOTAL
1	FMK U/S APERTURE	16.07	-	0.10	-	0.10		2.75 +Y/2.39 -Y	=	15.87 MIN
2	FMK BEAM DEFINING APERTURE	2.94	+	0.36	+	0.28		-	=	3.58 MAX
3	BRC1 BEAM TUBE ID	5.77	+	0.50	+	0.10		.83	=	6.37 MAX
4	FMK2 APERTURE	10.00	-	0.10	-	0.10		.793	=	9.80 MIN
5	BRC2 (W)	10.28	-	0.36	-	0.28		.525 +Y/.545-Y	=	9.64 MIN
6	PHOTON SHUTTER APERTURE	25.00	+	0.36	+	0.44		-	=	25.80 MAX

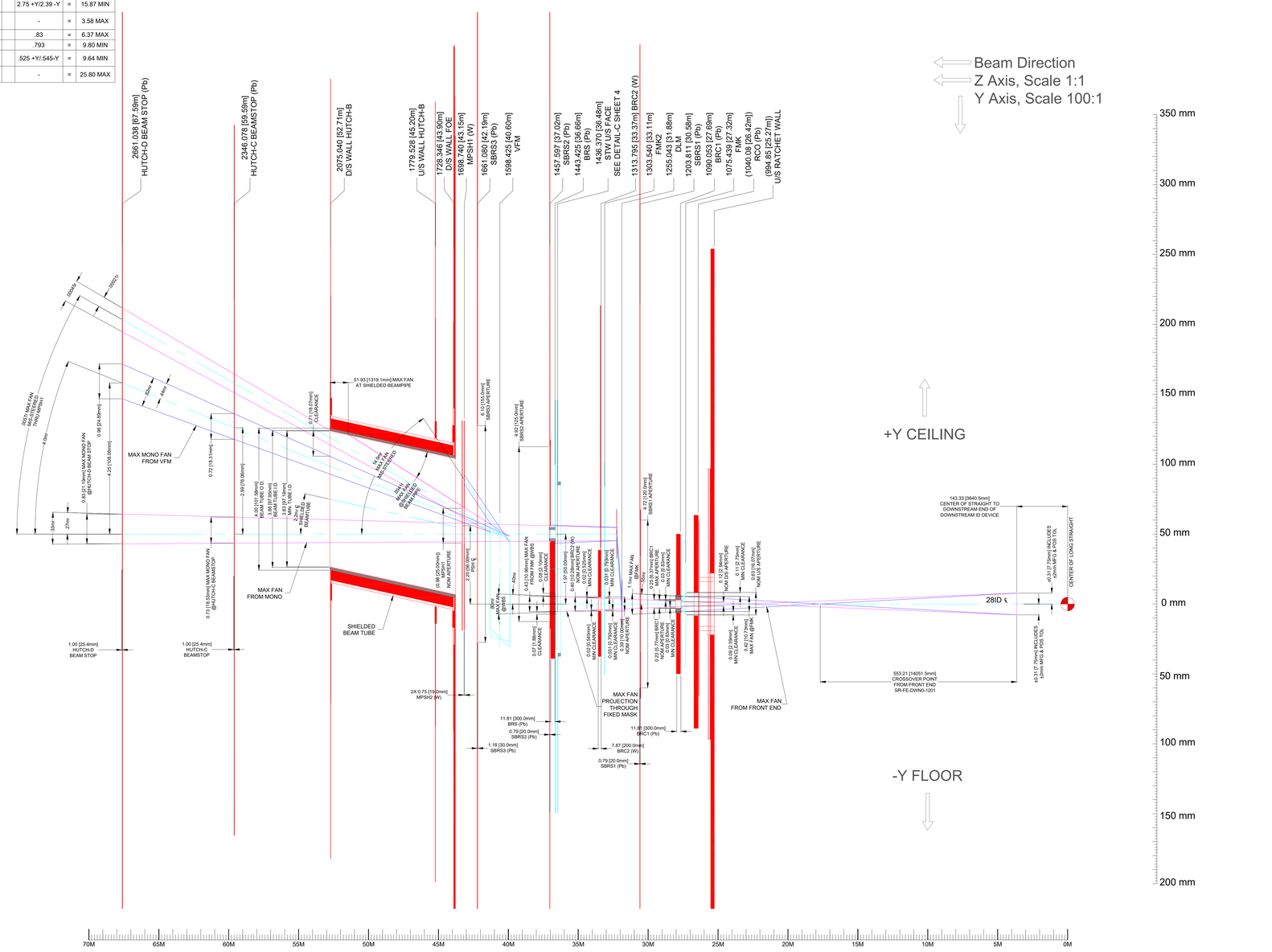

MAX SYNCHROTRON VERTICAL
XPD BEAMLINE
SCALE: = 1:100

SEE FRONT END RAY TRACING
SR-FE-DWN0-1201

E	PD-XPD-RAYT-0001	E
SHEET SIZE	DRAWING/PART NUMBER	REVISION
ESH&Q RISK LEVEL A1	SHEET 3 OF 12	

RELEASED – EFFECTIVE

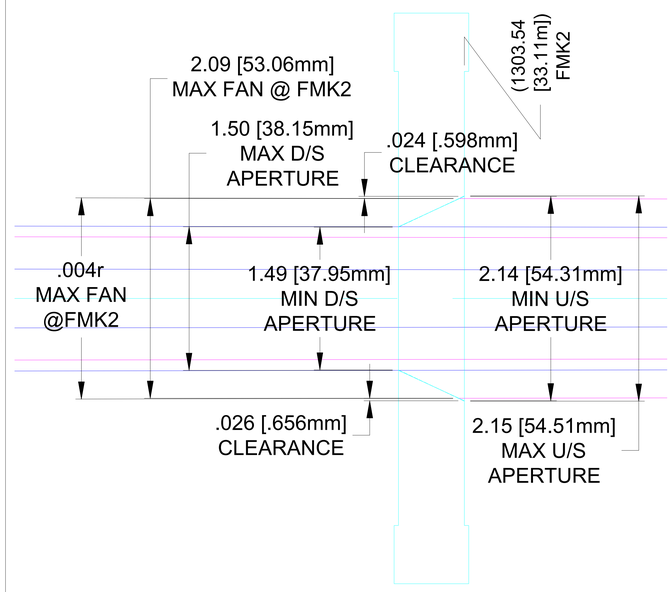

DETAIL-A
XPD FMK2 HORIZONTAL
SCALE 2:1

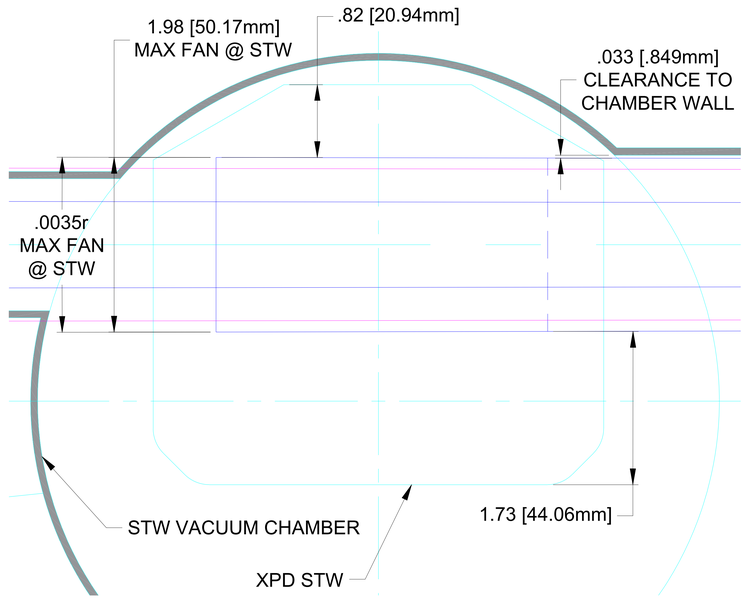

DETAIL-B
XPD STW HORIZONTAL
SCALE 2:1

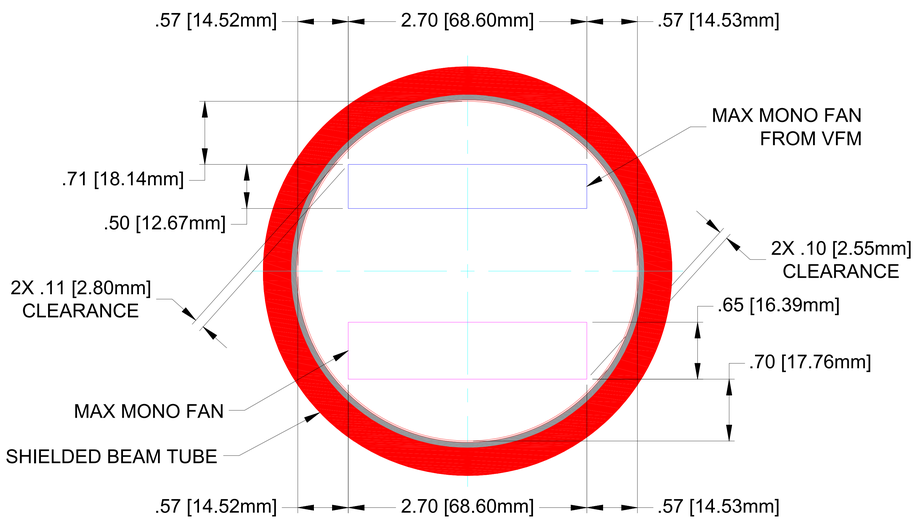

SECTION D-D
XPD SHIELDED BEAM TUBE
LOOKING U/S
SCALE 2:1

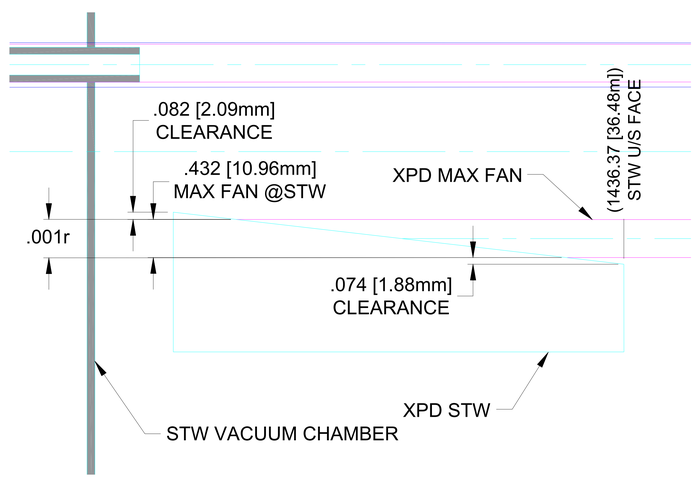

DETAIL-C
XPD STW VERTICAL
SCALE 2:1

XPD SYNCHROTRON DETAILS

E	PD-XPD-RAYT-0001	E
SHEET SIZE	DRAWING/PART NUMBER	REVISION
ESH&Q RISK LEVEL A1	SHEET 4 OF 12	

RELEASED – EFFECTIVE

TABLE OF TOLERANCED DIMENSIONS (mm)										
LINE	DESCRIPTION	NOMINAL	±	FABRICATION	±	POSITION	±	CLEARANCE	=	TOTAL
1	FMK U/S APERTURE	45.00	-	0.10	-	0.10		2.17	=	44.80 MIN
2	FMK BEAM DEFINING APERTURE	30.35	+	0.36	+	0.28		-	=	31.15 MAX
3	BRC1 BEAM TUBE ID	33.47	+	0.50	+	0.10		0.26	=	34.07 MAX
4	FMK2 U/S APERTURE	55.51	-	0.10	-	0.10		.598 IB/.656 OB	=	56.44 MIN
5	FMK2 BEAM DEFINING APERTURE	37.95	+	0.10	+	0.10		-	=	38.15 MAX
6	BRC2 (W)	41.92	-	0.36	-	0.28		.816 IB/.776 OB	=	41.28 MIN
7	PHOTON SHUTTER APERTURE	40.00	+	0.36	+	0.44		-	=	40.80 MAX

TABLE SHOWN FOR REFERENCE ONLY

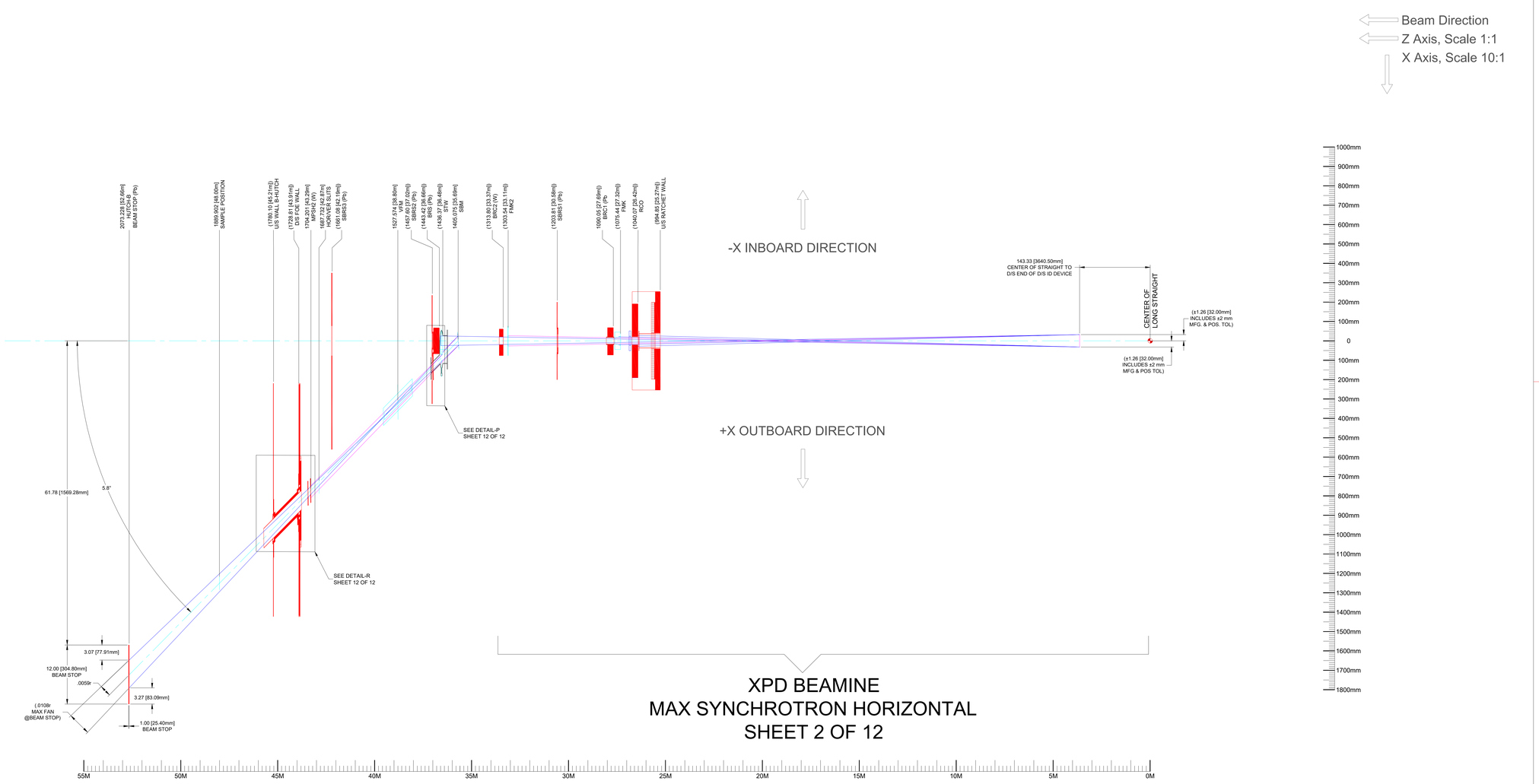

MAX SYNCHROTRON HORIZONTAL
PDF BEAMLINE
SCALE: = 1:75

E (SHEET SIZE)	PD-XPD-RAYT-0001 (DRAWING/PART NUMBER)	E (REVISION)
ESH&Q RISK LEVEL A-1	SHEET 8 OF 12	

RELEASED – EFFECTIVE

TABLE OF TOLERANCED DIMENSIONS (mm)										
LINE	DESCRIPTION	NOMINAL	±	FABRICATION	±	POSITION	±	CLEARANCE	=	TOTAL
1	FMK U/S APERTURE	16.07	-	0.10	-	0.10		2.75 +Y/2.39 -Y	=	15.87 MIN
2	FMK BEAM DEFINING APERTURE	2.94	+	0.36	+	0.28		-	=	3.58 MAX
3	BRC1 BEAM TUBE ID	5.77	+	0.50	+	0.10		.83	=	6.37 MAX
4	FMK2 APERTURE	10.00	-	0.10	-	0.10		.793	=	9.80 MIN
5	BRC2 (W)	10.28	-	0.36	-	0.28		.525 +Y/.545-Y	=	9.64 MIN
6	PHOTON SHUTTER APERTURE	25.00	+	0.36	+	0.44		-	=	25.80 MAX

TABLE SHOWN FOR REFERENCE ONLY

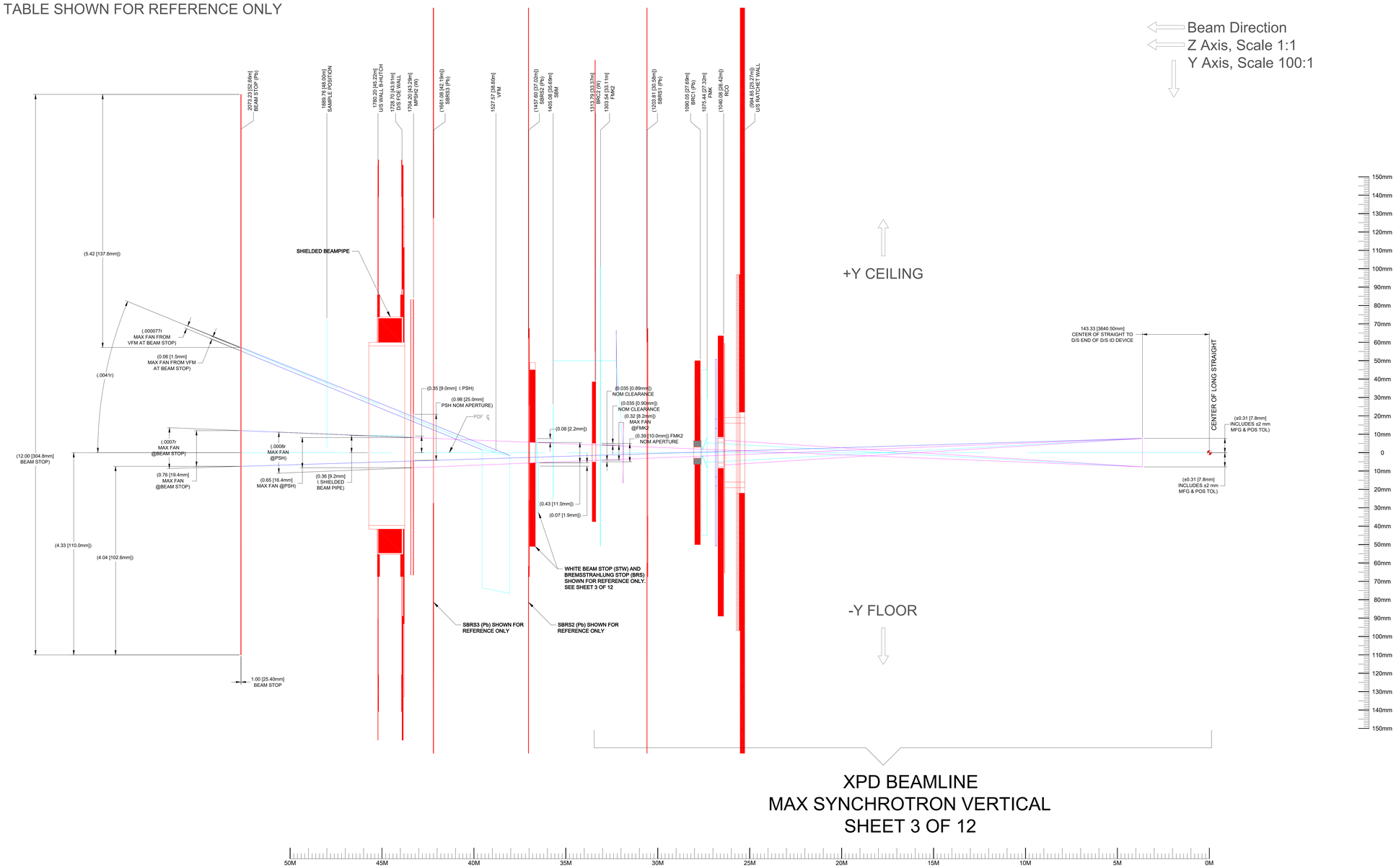

XPD BEAMLINE
MAX SYNCHROTRON VERTICAL
SHEET 3 OF 12

MAX SYNCHROTRON VERTICAL
PDF BEAMLINE
SCALE: = 1:75

E	PD-XPD-RAYT-0001	E
SHEET SIZE	DRAWING/PART NUMBER	REVISION
ESH&Q RISK LEVEL A-1	SHEET 9	OF 12

RELEASED – EFFECTIVE

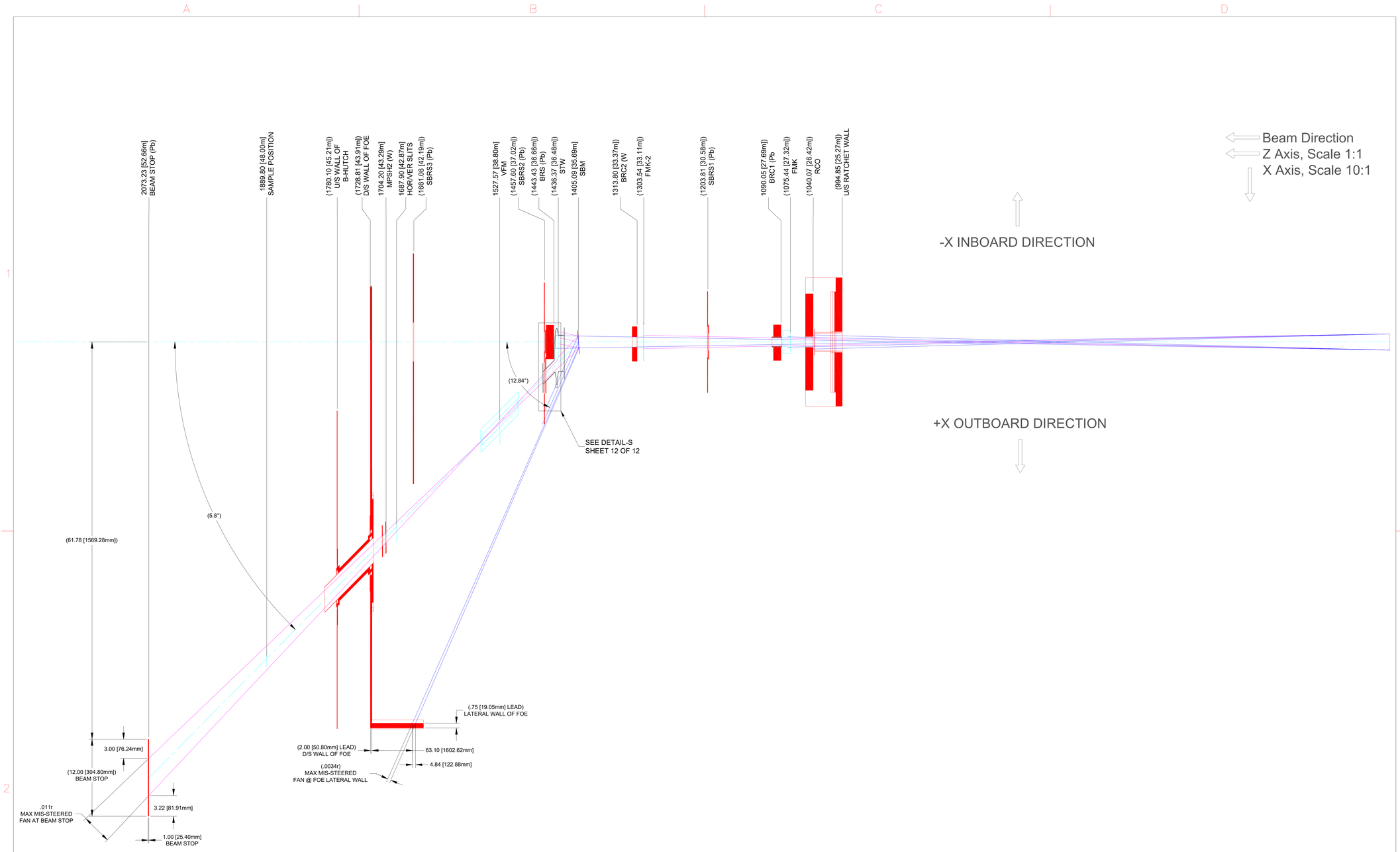

MAX SYNCHROTRON HORIZONTAL
PDF BEAMLINE MIS-STEERING
SCALE: = 1:50

E	PD-XPD-RAYT-0001	E
SHEET SIZE	DRAWING/PART NUMBER	REVISION
ESH&Q RISK LEVEL A-1	SHEET 10 OF 12	

RELEASED – EFFECTIVE

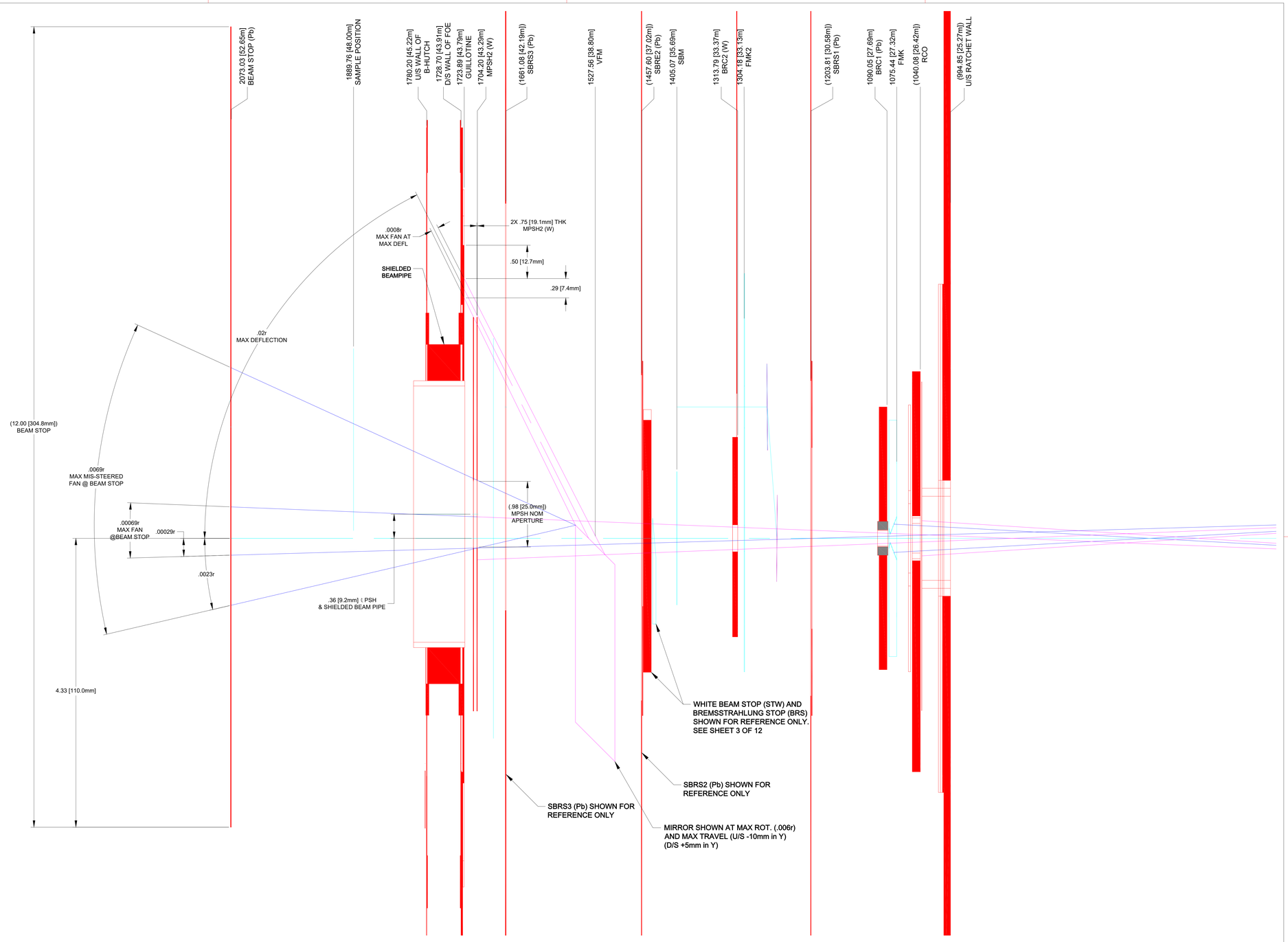

MAX SYNCHROTRON VERTICAL
PDF BEAMLINE MIS-STEERING
SCALE: = 1:50

E SHEET SIZE	PD-XPD-RAYT-0001 DRAWING/PART NUMBER	E REVISION
ESH&Q RISK LEVEL A-1		SHEET 11 OF 12

RELEASED – EFFECTIVE

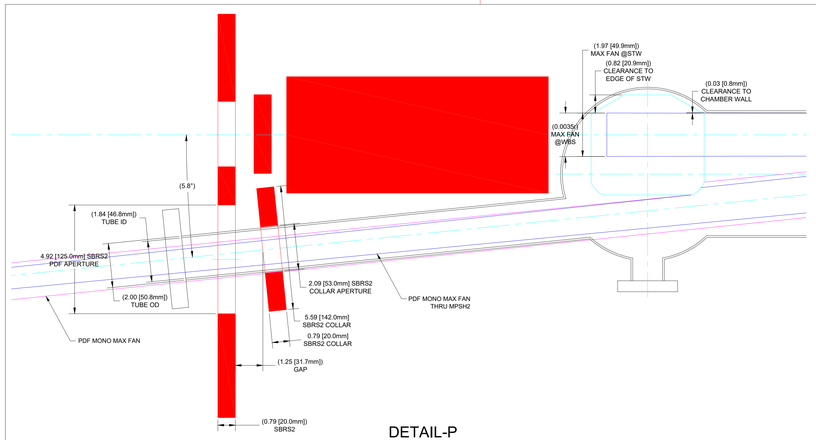

DETAIL-P
PDF SBRS2
SCALE 1:2

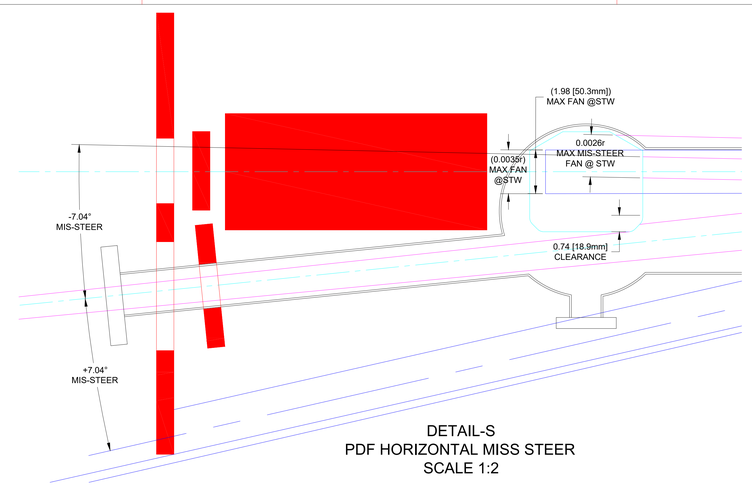

DETAIL-S
PDF HORIZONTAL MISS STEER
SCALE 1:2

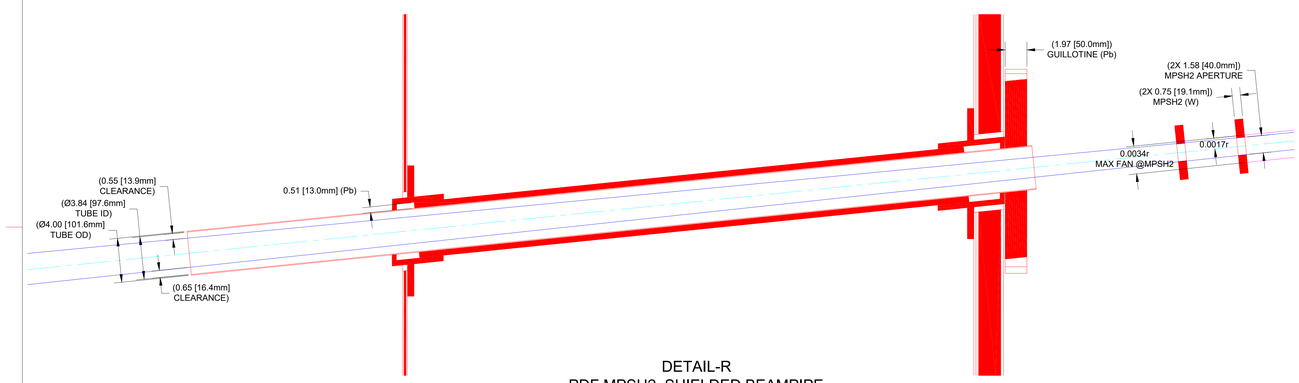

DETAIL-R
PDF MPSH2, SHIELDED BEAMPIPE
SCALE 1:4

PDF SYNCHROTRON DETAILS

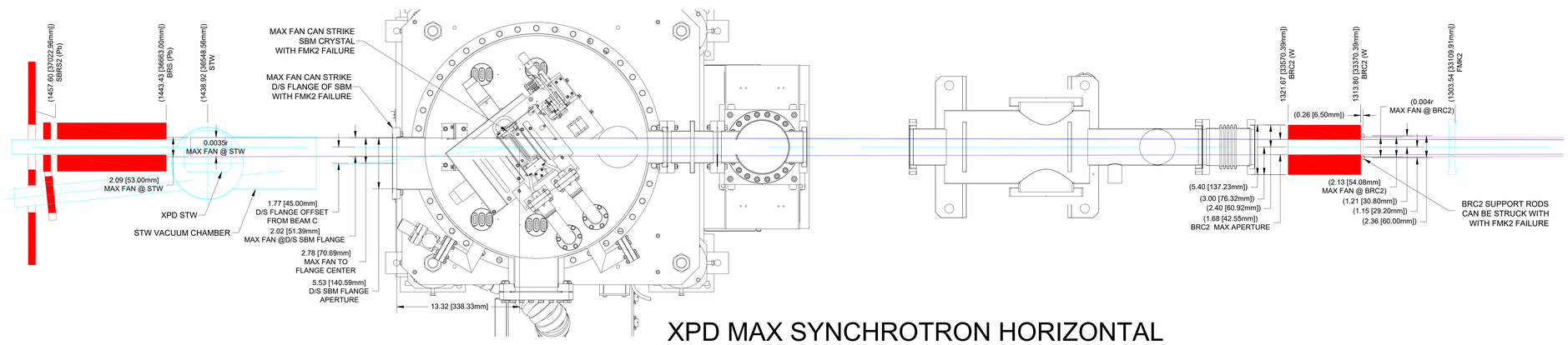

XPD MAX SYNCHROTRON HORIZONTAL FMK2 FAILURE DETAIL

E SHEET SIZE	PD-XPD-RAYT-0001 DRAWING/PART NUMBER	E REVISION
ESH&Q RISK LEVEL A1		SHEET 12 OF 12

RELEASED – EFFECTIVE