Pair Distribution Function Beamline, PDF (28-ID-1)

IRR Functional Description

Contents

1 INTRODUCTION 3
1.1 Primary Research Capabilities 3
1.2 Beamline Staff 4

2 BEAMLINE PERFORMANCE GOALS 5

3 BEAMLINE DESIGN AND COMPONENTS 5
3.1 Source Description 5
3.2 Beamline Layout 6
3.3 Primary Shielding 8
3.4 Synchrotron Beam Management 9
3.5 Primary Bremsstrahlung Radiation Management 9
3.6 Secondary Bremsstrahlung Radiation Management 9

4 BEAMLINE SAFETY CREDITED CONTROLS 10
4.1 Shieldings 10
4.2 Area Radiation Monitors (ARMs) 10
4.3 Oxygen Sensors 10
4.4 Personnel Protection System (PPS) 11
4.5 Equipment Protection System (EPS) 11
4.6 End-station Detector Bridge (EPS) 11

1 INTRODUCTION

1.1 Primary Research Capabilities

The 28-ID-1 beamline is the dedicated Pair Distribution Function (PDF) beamline at the NSLS-II. The PDF is a relatively new and powerful technique to study local structural fluctuations in complex materials that are very often responsible for tuning their interesting properties. Quantum dots and nanoparticles composed of few thousand atoms that show unique optical, electronic, magnetic, and/or, chemical properties fall into another realm that is quite challenging for conventional powder diffraction methods like the Rietveld Refinement, a technique used to characterize chrystalline materials. The PDF technique has also proven to be of great value for studying nanoparticle systems. The PDF method provides quantitative structural information regarding these systems on different length-scales shedding light on their structure-property relationships. Such knowledge enables successful manipulation of these materials to modify and obtain desired properties.

The primary focus of the PDF beamline is high throughput in-situ, and/or time resolved PDF studies of complex materials in different sample environments and in their real-life applications. The experimental setup at the PDF beamline can also provide complementary Wide Angle X-ray Scattering (WAXS) and Small Angle X-ray Scattering (SAXS) data thus opening the door for complex modeling approaches.

The PDF end-station is designed to facilitate a variety of sample environments including a (5-500) K liquid-He cryostat, a (80-500) K liquid-N_2 cryostream, a (0-5) T superconducting magnet, a Diffuse Reflectance Infrared Fourier Transform (DRIFT) Spectrometer, a gas flow-cell heater, etc. The PDF beamline also facilitates combining sample environments: for example, temperature and magnetic field studies can be undertaken simultaneously. The PDF beamline is equipped with a Gas Handling System (GHS) that can supply a variety of gases and gas mixtures to one or more sample chambers located at the experimental end station. The PDF user science program includes, but is not limited to strongly correlated materials, thin films, batteries and fuel cells, catalysts, and energy-related novel nanomaterials.

1.2 Beamline Staff

Milinda Abeykoon	Lead Beamline Scientist	LBS	
Eric Dooryhee	XPD Lead Beamline Scientist and Diffraction and In-Situ Scattering program manager	ABS	
Ed Haas	Mechanical Engineer	ABS	
Oksana Ivashkevych	Control Engineer	ABS	
John Trunk	Technician	ABS	

2 BEAMLINE PERFORMANCE GOALS

Table 1 summarizes the designed performance of the PDF beamline. These performance parameters are based on performance calculations and ray-tracing simulations of the optical design of the PDF beamline.

Table 1. Designed performance of the PDF beamline

Parameter	Specification/Description
Wiggler	WD100 (7 m long damping wiggler)
Operating Energies	39.1 keV, 63.8 keV, 74.8 keV, and 117.2 keV
Energy Bandwidth after SBM (ΔE/E)	0.007 with a horizontal fan of 0.3 mrad on the SBM
Beam size at the sample	(0.5 X 0.5) mm – (1 X 1) mm
Flux at the sample with 500 mA storage ring current	~ 10^{13} photons/sec/0.1% BW

3 BEAMLINE DESIGN AND COMPONENTS

3.1 Source Description

The X-ray Powder Diffraction (XPD) and PDF beamlines use the same source, a 7 m long damping wiggler designed to obtain the highest possible flux in the energy range of 30-75 keV. The damping wiggler parameters are listed below in table 2 and a photograph of the 28-ID damping wiggler with the power spectrum showing sequential filtering of the beam before reaching the XPD DLM and PDF SBM is included in figure 1. For more details see BSA document, "X-Ray Powder Diffraction (XPD) Beamline IRR Functional Description"[1]).

Table 2. Parameters of the 28-ID DW100 damping wiggler.

Device type	Damping Wiggler
Length of magnet array (uncanted) (m)	7
Number of full periods	68
Max field strength (T)	1.85
Maximum deflection parameter K_{ef}	6.95
Critical energy (keV)	11.1
Maximum total power (kW)	61
Horizontal power density (kW/mrad)	14.4
On-axis power density [kW/mrad^2]	56

[1] https://ps.bnl.gov/phot/BeamlineSupportDocs/XPD/PDF%20IRR%20Documents/Reference%20Documents/XPD%20IRR%20Functional%20Description%20v1-2.pdf

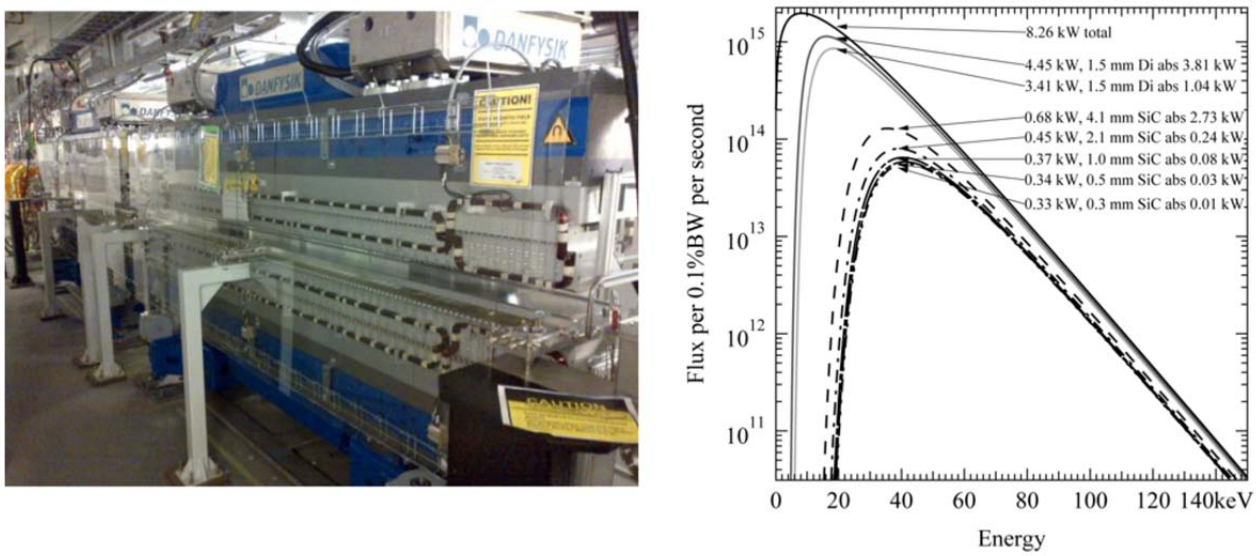

Figure 1. Photograph (left), and power spectrum (right) of the 28-ID wiggler, DW100.

3.2 Beamline Layout

A schematic layout of the 28-ID beamline is shown in figure 2. The front-end of the beamline serves branch lines, 28-ID-1 (PDF) and 28-ID-2 (XPD) (see the BSA document, "X-ray Powder Diffraction (XPD) Beamline IRR Functional Description" for information regarding the 28-ID front end and the XPD branch line). The PDF beamline starts from the Side Bounce Monochromator (SBM) located in the First Optical Enclosure (FOE) of the beamline. Movable filters and white-beam slits located just before the SBM (Figure 2) also serve the PDF beamline.

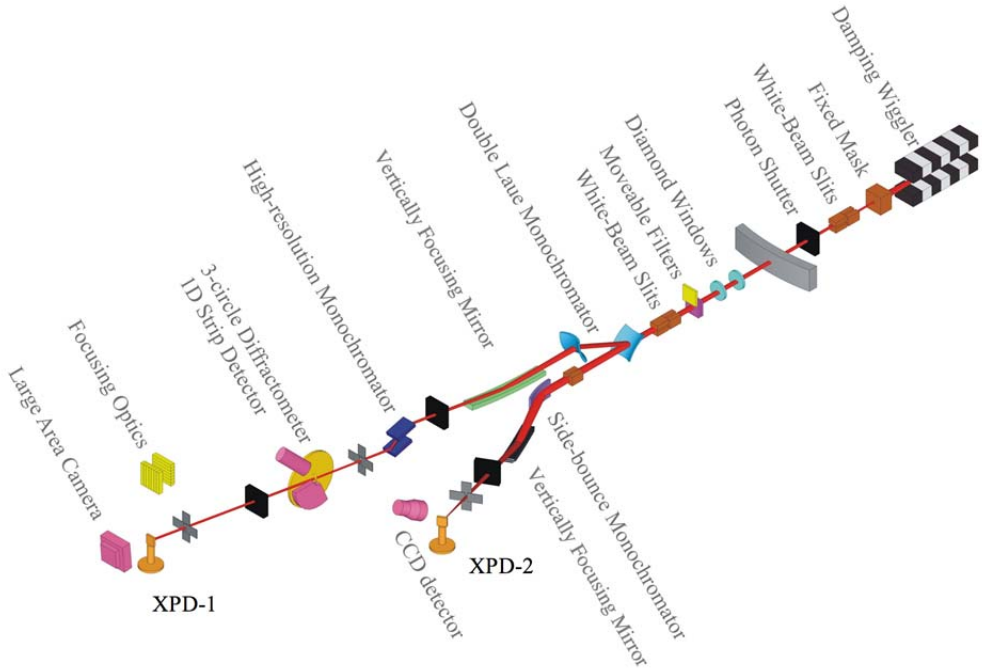

Figure 2. Conceptual schematic layout of the 28-ID beamline.

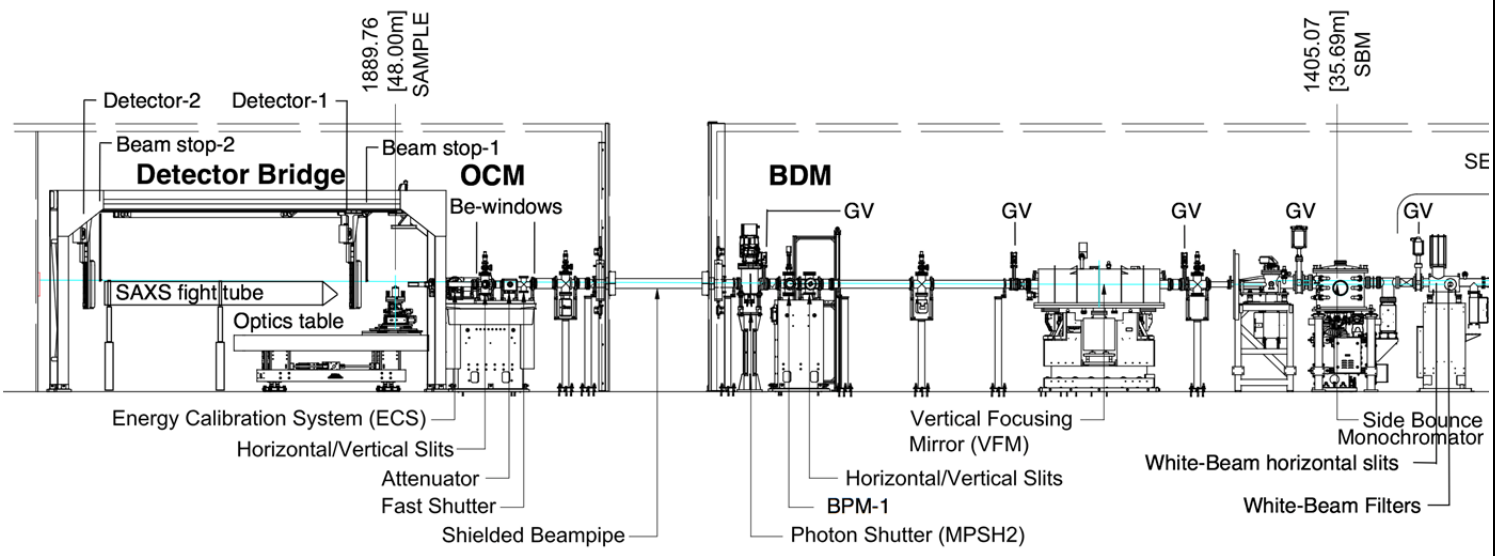

Figure 3. 2-D Schematic layout of the PDF (28-ID-1) beamline.

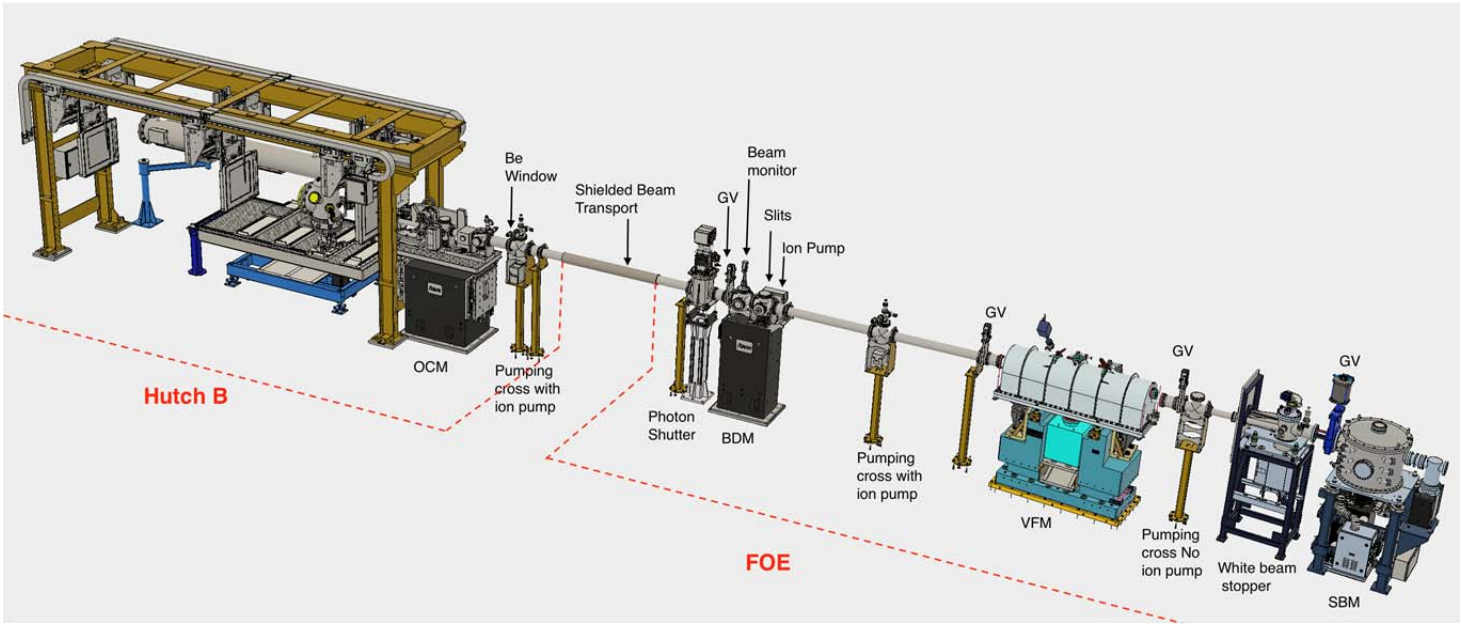

Figure 4. 3-D Schematic layout of the PDF beamline.

The first optical component of the PDF beamline, the Side Bounce Monochromator (SBM), receives the part of white beam that is transmitted through the first crystal of the XPD beamline Double Laue Monochromator (DLM, see Figure 1). The SBM is used to select the X-ray photon energy of the PDF beamline and to focus the monochromatic X-ray beam in the horizontal plane. The second optical component of the PDF beamline, the Vertically-Focusing Mirror (VFM) is used to focus the X-ray beam in the vertical plane. The Beam Diagnostic Module (BDM), located downstream of the VFM, contains beam-defining slits and a beam monitor. The Monochromatic Photon Shutter (MPSH2) is the last component of the PDF beamline located in

the FOE. The PDF monochromatic beam travels between the FOE and experimental hutch B inside a shielded beam transport.

The Optics Conditioning Module (OCM), located in hutch B, consists of two Be vacuum windows, a fast photon shutter, a set of attenuators, horizontal and vertical slits, a beam alignment system using a LASER pointer, a telescopic beam guide, and a movable 2-circle Diffractometer for energy calibration. A large gantry system (Detector Bridge) that facilitates the translation of two area detectors in 3-D space is located downstream of the OCM. A heavy-duty optics table that supports sample environments and a Small Angle X-ray Scattering (SAXS) flight tube is located underneath the Detector Bridge. Figures 3 and 4 shows the beamline component layout. Figure 5 shows a 3-D view of the PDF endstation.

The beamline GHS is not part of the IRR. There will be a separate instrument readiness review for the GHS at a later date.

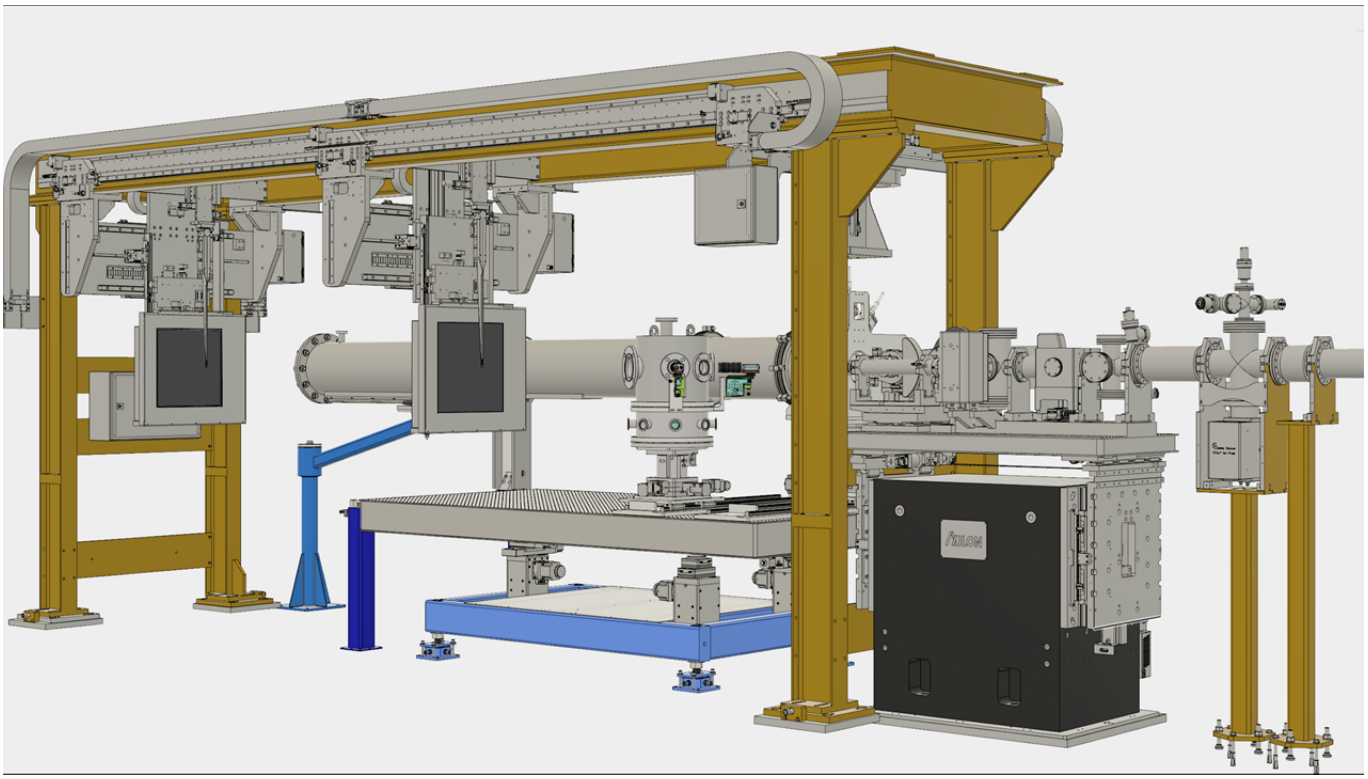

Figure 5. 3-D Schematic layout of the PDF beamline end-station.

3.3 Primary Shielding

3.3.1 Primary shielding of scattered radiation is implemented by hutches. The shielding wall thicknesses follow released shielding guidelines:[1]

Hutch A (FOE, white beam hutch):

- Side wall: 19 mm lead (Pb)
- Downstream wall: 50.8 mm lead
- Roof: 10 mm lead

[1] P.K. Job, *Revised Guidelines for the NSLS-II Beamline Shielding Design*, (LT-C-ESH-STD-001).

Hutch B (monochromatic beam hutch):

- Side walls: 4 mm thick lead
- Upstream wall 4 mm thick lead
- Downstream wall: 4 mm thick lead
- Roof: 3 mm thick lead

3.3.2 Shielded Beam Transport

- Diameter 4 inch
- Lead wrap thickness 13 mm

Figure 6. From left to right FOE, hutch B and the shielded beam transport that transports the PDF X-ray beam from FOE to Hutch B.

3.3.3 Monochromatic Photon Shutter:

Location	At the downstream wall of FOE – 43.29 m to source
Design	2 x 19 mm W thickness in beam direction. Aperture is 40 mm x 25 mm

3.3.4 A monochromatic beam stop is permanently installed on the downstream wall of hutch B centered on the beam axis with the dimension: 305 mm (H) × 305 mm (V) × 25 mm (t).

3.4 Synchrotron Beam Management

See the BSA document, "X-Ray Powder Diffraction (XPD) Beamline IRR Functional Description"[1]

3.5 Primary Bremsstrahlung Radiation Management

See the BSA document, "X-Ray Powder Diffraction (XPD) Beamline IRR Functional Description"[1]

3.6 Secondary Bremsstrahlung Radiation Management

See the BSA document, "X-Ray Powder Diffraction (XPD) Beamline IRR Functional Description"[1]

[1] https://ps.bnl.gov/phot/BeamlineSupportDocs/XPD/PDF%20IRR%20Documents/Reference%20Documents/XPD%20IRR%20Functional%20Description%20v1-2.pdf

4 BEAMLINE SAFETY CREDITED CONTROLS

4.1 Shieldings

The design of all radiation shieldings (hutches and radiation safety components) for the PDF beamline follows strict guidelines to reduce radiation levels external to the beamline enclosures during normal operation to < 0.05 mrem/hr and as low as reasonably achievable. Shielding controls for the PDF beamline include all hutches, shielded beam pipes, stops, and all monochromatic beam shutters as detailed in Section 3. Additional shielding for the XPD beamline is used by is not included in this document.

4.2 Area Radiation Monitors (ARMs)

Radiation level in the area is actively monitored through an area radiation monitor (ARM) installed on the outboard wall at the downstream end of the FOE (Figure 14). The monitor has been certified in accordance with the procedure PS-C-ASD-PRC-008, *NSLS-II Area Radiation Monitor PPS Test.*

Figure 7. Area Radiation Monitor (ARM) installed on the beamline

4.3 Oxygen Sensors

The XPD double crystal monochromator uses liquid nitrogen (LN2) for cooling. The PDF end-station uses LN_2 for the cryostream, Liquid He for the cryostat, and the gases supplied by the beamline GHS for sample environments. The use of LN_2, Liquid He, and other gases can create potential oxygen deficiency hazard (ODH). This is mitigated by the installation of oxygen sensors inside the FOE and B hutch. These systems have been certified in accordance with procedure PS-C-XFD-PRC-005, *Beamline Enclosures ODH Monitoring and Alarm System Certification and Inspection.*

Figure 8. Oxygen sensor installed in the FOE to monitor potential oxygen deficiency hazard associated with the use of LN2 for cooling the DCM. A similar Oxygen sensor is installed in the B hutch.

4.4 Personnel Protection System (PPS)

The Personnel Protection System (PPS) controls access to the hutches through interlock system and search and secure procedure to ensure personnel safety during normal operation of the beamline. It also monitors critical DI water flow to the white beam stop (and to the first XPD mask) to ensure the safe operation of the radiation shielding components. In the event that water flow is lost, the PPS system will close the photon shutter to shut off the synchrotron beam.

4.5 Equipment Protection System (EPS)

The Equipment Protection System (EPS) monitors and interlocks the vacuum and thermal status of various components of the beamline to ensure the safe operation of the equipment. One key aspect for monitoring the vacuum is to ensure the safe windowless operation of the beamline.

4.6 End-station Detector Bridge (EPS)

End-station detector bridge supports the translation of two large area detectors and a sample grid in X,Y, & Z directions. To assure personnel safety, the 28-ID Equipment Protection System (EPS) prevents bridge components from being operated with the 28-ID-B hutch door open (the default operational mode). The PPS interlock can be bypassed by qualified personal with permission from the PDF Lead Scientist, for technical commissioning of the end-station setup. The authorized, qualified personal must follow the guidelines in the BSA document, “PDF Detector Bridge Safe Operation, E-stop and Interlock Test” for interlock bypassed operation. The detector bridge is also equipped with two emergency stop buttons located on the upstream and downstream outboard legs of the bridge.