The only official copy of this document is the one online in the NSLS-II SharePoint Document Center. Before using a printed copy, verify that it is current by checking the printed document's revision history with that of the online version.

Brookhaven National Laboratory National Synchrotron Light Source II Work Instruction	Doc No. NSLSII-28ID1-WIN-003 Effective Date: 27FEB2018 Review Frequency: 5 yrs Rev. No. 1
Title: PDF Beamline Monochromator Crystal Changeout	

Prepared By:	Reviewed By:	Approved By:
2/27/2018	2/27/2018	2/27/2018
X Milinda Abeykoon	X Edwin Haas	X
Milinda Abeykoon PDF Lead Beamline Scientist Signed by: Abeykoon, Milinda	Ed Haas PDF Beamline Engineer Signed by: Haas, Edwin	Eric Dooryhee Program Manager - Diffraction & In-situ Scattering Signed by: Dooryhee, Eric

1 WORK SCOPE

This work instruction provides the directions for swapping out the crystal in the Sidebounce Laue Monochromator at the PDF beamline. The following sections are included:

- Venting the system and opening the vessel
- Removing and cleaning the crystal
- Replacing the crystal and Galinstan
- Closing the vessel and pumping down the vacuum

2 PRECAUTIONS/WARNINGS

2.1 Galinstan is corrosive to most metals and can cause mild skin irritation. To avoid personal injury:

- Wear rubber gloves and goggles
- Avoid any spillage
- Avoid any unnecessary contact with chemicals

2.2 Use care when unpacking or handling Galinstan to prevent impairment to the quality and degree of purity of the fluid.

2.3 To avoid contamination of the surface of the mirror optic, it shall only by unpacked and installed in a clean, particle free environment. Gloves, laboratory apron and hat shall be worn at all times.

3 INSTRUCTIONS

Note: See Attachment A for figures.

3.1 Venting the System and Opening the Vessel

a. Close the upstream AND the downstream gate valves.

b. Close the gate valve below the SBM vacuum vessel AND confirm full closure of all three gate valves before proceeding to the next step.

c. Switch off the ion pump.

d. Switch off the turbo pump by setting the parameter P:023 to 0 at the TMP controller.

e. Switch off the backing pump at the local on/off switch.

f. Vent the SBM vacuum vessel using the right-angle gate valve and clean, dry GN_2 (unless otherwise authorized by PDF Lead Beamline Scientist).

g. ONCE air pressure has been achieved within the vessel, THEN unclamp the corrugated hose ends from the KF flanges on the vessel lid.

h. Unbolt the vessel lid from the top of the vessel AND remove it.

3.2 Removing and Cleaning the Crystal

Caution: To avoid contamination of the surface of the crystal, it shall be unpacked and installed only in a clean, particle free environment. Gloves, laboratory apron, and hat (or hair covering) shall be worn at all times.

a. Verify that the bender actuators are in the neutral position.

b. Remove the crystal transport cover AND the syringe from the crystal storage box.

c. Replace the lid on the crystal storage box.

Note: the design of the crystal transport cover allows it to be attached in only one orientation.

d. Place the crystal transport cover over the crystal AND screw it into place.

Note: Slots are provided in the crystal bender plate to locate any screws etc. that are disconnected during the operation.

e. Unscrew the leaf spring from the cantilever end of the crystal assembly AND the crystal holding bracket from the bender plate.

f. Remove the crystal assembly from the cooling bath.

Caution: When swabbing the crystal, do NOT apply any force as this will only spread the Galinstan.

g. Using a cotton swab dipped in alcohol, gently swab the Galinstan from the bottom of the crystal until all excess Galinstan has been removed.

    g.1 Use a new cotton swab as needed for each surface.

h. ONCE the Galinstan has been removed, THEN any remaining alcohol smear shall be removed.

    h.1 Lightly swab the surface with a cotton swab dipped in acetone to remove the remaining alcohol.

i. Using a syringe, remove the Galinstan from the copper cooling bath.

    i.1 If required, the Galinstan may be cleaned from the cooling bath using a lint-free cloth or cotton swab.

j. Return the crystal assembly to the crystal storage box.

k. Screw the assembly into place.

3.3 Replacing the Crystal and Galinstan

a. Remove the required crystal assembly from the crystal storage box AND transport it to the bender.

b. Verify that the crystal transport cover is properly attached (in accordance with the etched crystal cut and beam direction).

c. Using a lint free cloth or swab, wet the cooling bath and bottom of the crystal with Galinstan.

d. Locate the crystal within the cooling bath.

Note: The submersion depth of the crystal into the Galinstan will affect the cooling performance. A minimum fill depth of 4 mm is required.

e. Using a syringe, slowly fill the copper cooling bath with Galinstan to a minimum of 4 mm.

Warning: Each crystal has been pre-aligned within its clamps to provide a gap between the bottom of the crystal and the base of the cooling bath assembly. Never remove the clamps from the crystal.

e.1 While filling, keep the crystal at an angle and gently tap it to ensure that the Galinstan has no air bubbles.

f. Position the crystal holding bracket against the precision dowels on the bender plate AND screw into place.

g. Remove the crystal transport cover from the crystal assembly.

h. Verify that the bender actuators are in the neutral position AND screw the leaf spring into place under the fixing plate on the cantilever end of the crystal assembly.

i. Return the crystal transport cover and syringe to the crystal storage box.

j. Close the crystal storage box.

3.4 Closing the Vessel and Pumping Down the Vacuum

a. Place the vessel lid on top of the vessel AND bolt the lid in to position.

Note: The KF flanges should sit in line with the beamline in order for the corrugated hose to reach both.

b. Attach the corrugated hose ends to the KF flanges Attach the corrugated hose ends to the KF flanges AND clamp them into place.

c. Set the backing pump manual valve so both the turbo pump and vessel lid will be pumped.

d. Set the turbo pump manual valve so only the turbo pump will be pumped.

e. Open the turbo pump gate valve.

f. Switch on the backing pump at the local on/off switch.

g. Switch on the turbo pump by setting the parameter P:023 to 1 at the TMP 350 controller.

h. Wait 10-15 minutes.

i. Set the backing pump manual valve so that only the turbo pump will be pumped.

j. Leave the system pumping down for ~ 2 hours, until the vacuum pressure reaches ~2×10^{-7}.

k. ONCE the vacuum pressure reads ~2×10^{-7}, THEN close the turbo pump gate valve AND immediately set the turbo pump manual valve so that only the turbo pump gate valve will be pumped.

l. Switch on the ion pump AND pump until vacuum pressure reaches ~2×10^{-8} torr.

m. ONCE the vacuum pressure reads ~2×10^{-8}, THEN open the upstream and downstream gate valves.

4 ATTACHMENTS

4.1 Attachment A, *Figures*

The only official copy of this document is the one online in the NSLS-II SharePoint Document Center. Before using a printed copy, verify that it is current by checking the printed document's revision history with that of the online version.

REVISION HISTORY

REVISION	SECTION(S)	PAGE #	DATE	List of Reviewers	DESCRIPTION
1	All	All	27FEB2018	A. Ackerman R. Lee	First Issue.

If you have any questions or feedback regarding this document, please click this link.

Attachment A - Figures

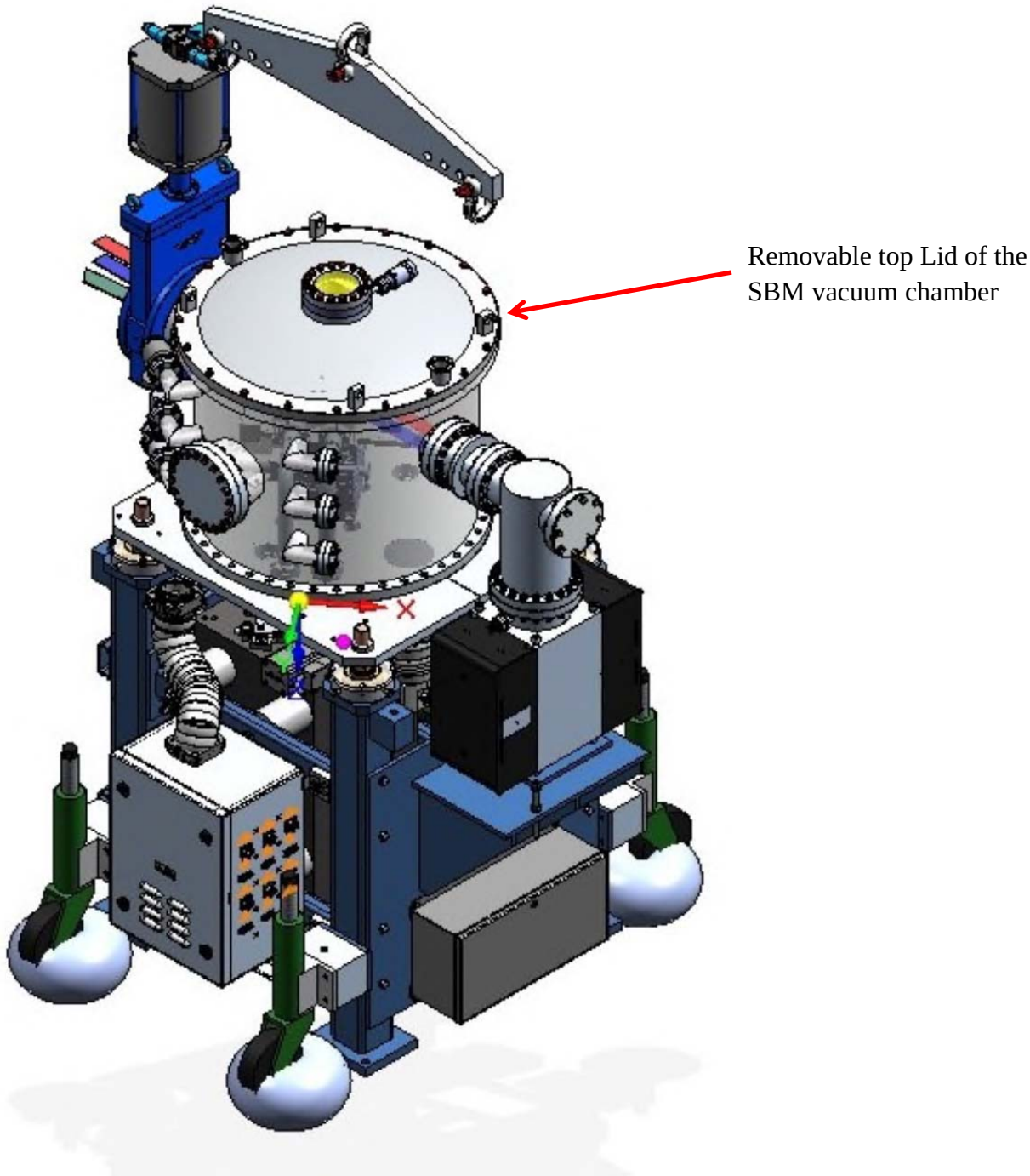

Figure A-1: Side Bounce Laue Monochromator

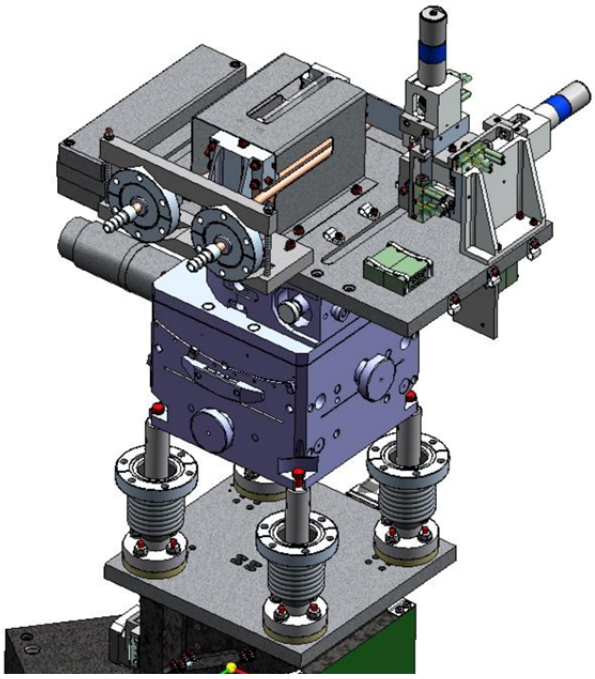

Figure A-2: Crystal Bender with the Crystal Assembly and Protective Cover Attached

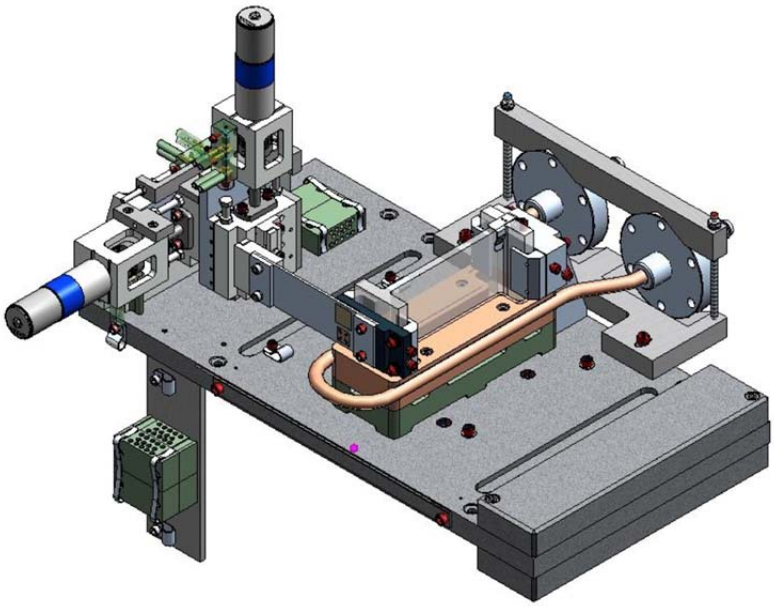

Figure A-3: Crystal Bender with Crystal Assembly Attached

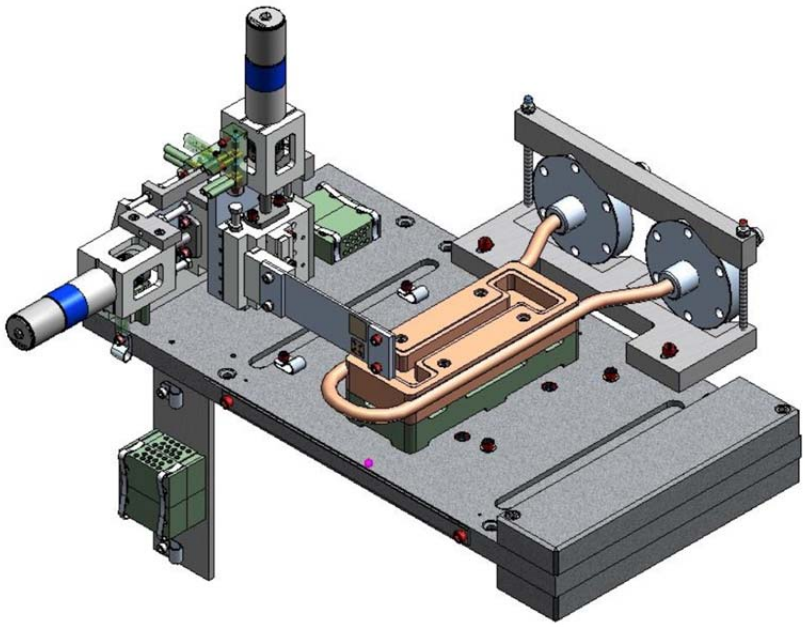

Figure A-4: Crystal Bender with Crystal Assembly Removed

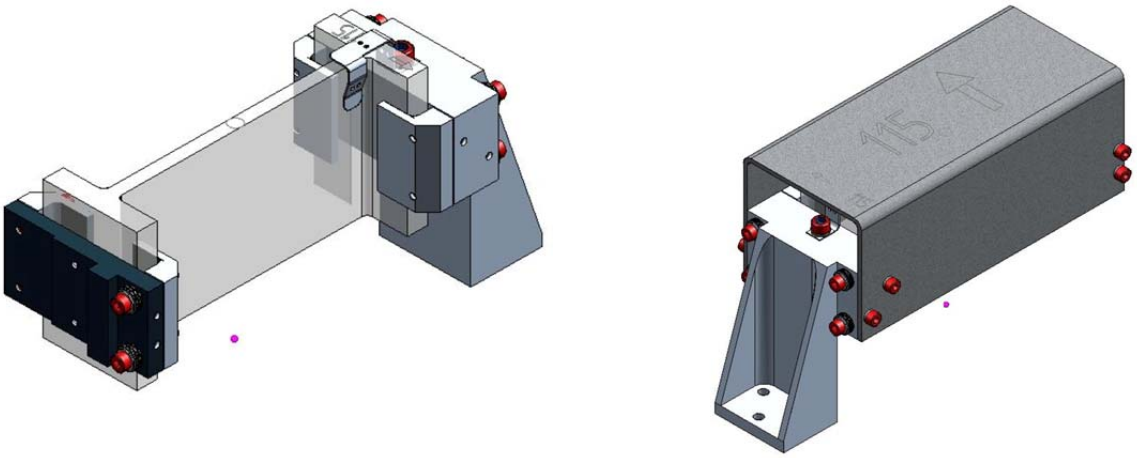

Figure A-5: Crystal Assembly without (left) and with (right) Crystal Transport Cover