REVISION HISTORY					
REV	DESCRIPTION	DATE	DESIGNER	CHECKED BY	ENGINEER
4	RELEASE PER ECO-005480	04/2018	A.DESANTIS	RG/ML	M.LUCAS

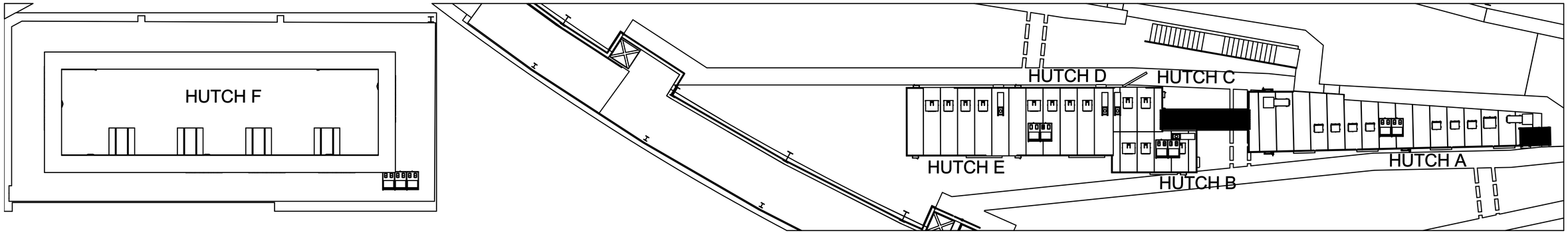

DI WATER SYSTEM						
SYSTEM	Hutch A	Hutch B	Hutch C	Hutch D	Hutch E	Hutch F
PPS	MASK #1	-	MASK #4	FUTURE CIRCUIT	FUTURE CIRCUIT	MASK #5
	WHITE BEAM STOP #1	-			WHITE BEAM SHUTTER	
	MASK #2					
	MASK #3					
	WHITE BEAM SHUTTER (S*)					
EPS	DIAMOND WINDOW		FUTURE CIRCUIT	FUTURE CIRCUIT	DIAGNOSTICS	FUTURE CIRCUIT
	SIDE BOUNCE MONO*					DIAGNOSTICS
	WHITE BEAM SLITS					
	IMAGING MONO					
	FOCUSING MONO*					
	VERTICAL FOCUSING MIRROR #1*					
	VERTICAL FOCUSING MIRROR #2*					

*FUTURE SCOPE
ASSUME 1.5" WATER PIPE
WATER CIRCUITS TO BE COMBINED WHERE POSSIBLE

HEX DI WATER SYSTEM

PROCUREMENT CONTROL DRAWING
INITIAL RELEASE AT REV 4 AS DWFX

INFORMAL RELEASE
FOR QUOTES OR PROTOTYPE ONLY
NOT FOR PRODUCTION

NEXT ASSY:
PROJECT:

UNLESS OTHERWISE SPECIFIED
ALL DIMENSIONS ARE IN INCHES
DIMENSIONS IN BRACKETS [xx.xx] (WHERE PRESENT) ARE MILLIMETERS AND ARE FOR REFERENCE ONLY
INTERPRET DRAWING AS PER ASME Y14.5-1994 OR Y32.2-1975

DIMENSIONAL TOLERANCES	ANGULAR TOLERANCE
X. ± 0.060	± .5°
.X ± 0.030	
.XX ± 0.015	FINISH 125
.XXX ± 0.005	

BREAK EDGES & SHARP CORNERS 0.005 MIN. TO 0.030 MAX

THIRD ANGLE PROJECTION
SCALE: SEE DWG VIEW

BROOKHAVEN NATIONAL LABORATORY
BROOKHAVEN NATIONAL LABORATORY
BROOKHAVEN SCIENCE ASSOCIATES
UPTON, NEW YORK 11973
Exploring Life's Mysteries, Protecting its Future

NSLS II NATIONAL SYNCHROTRON LIGHT SOURCE II

DRAWN BY	A.DESANTIS	4/11/2018
CHECKED BY	RG/ML	04/2018
VACUUM APPROVAL		
ENGINEER APPROVAL	M.LUCAS	04/2018
SUPERVISOR APPROVAL		
ES&H APPROVAL		
QA APPROVAL		

WBS# 7.5.04

PHOTON DIVION
HEX BEAMLINE, UTILITIES
HEX BEAMLINE UTILITIES

D SHEET SIZE | PD-HEX-UT-1000 DRAWING/PART NUMBER | 4 REVISION

ESH&Q RISK LEVEL A3 | SHEET 1 OF 5

C:\Mech-Eng\LT\PD\HEX\UT\PD-HEX-UT-1000.dw

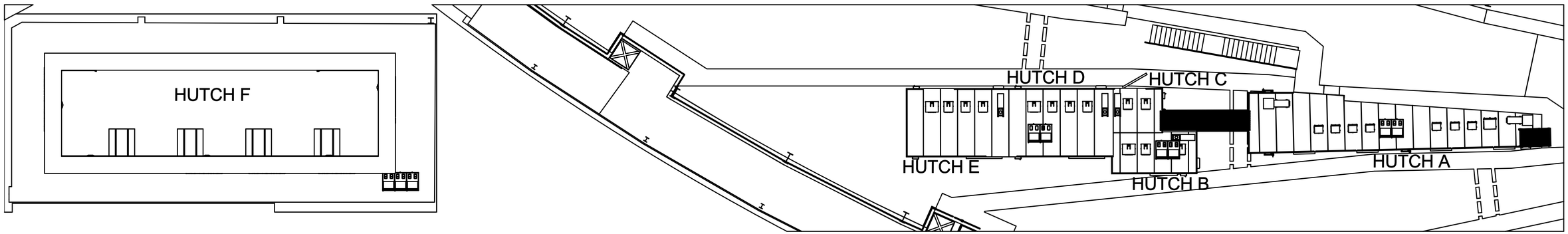

PROCESS CHILLED WATER SYSTEM						
Location	Hutch A	Hutch B	Hutch C	Hutch D	Hutch E	Hutch F
Hutch Roof	2 Racks	2 Racks	-	2 Racks	-	-
Inside	-	2 Circuits	-	2 Circuits		4 Circuits
On Floor	-	-	-			5 Racks

HEX PROCESSED CHILLED WATER SYSTEM

D SHEET SIZE	PD-HEX-UT-1000 DRAWING/PART NUMBER	4 REVISION
ESH&Q RISK LEVEL A3	SHEET 2 OF 5	

C:\Mech-Eng\LTP\PD\HEX\UT\PD-HEX-UT-1000.dw

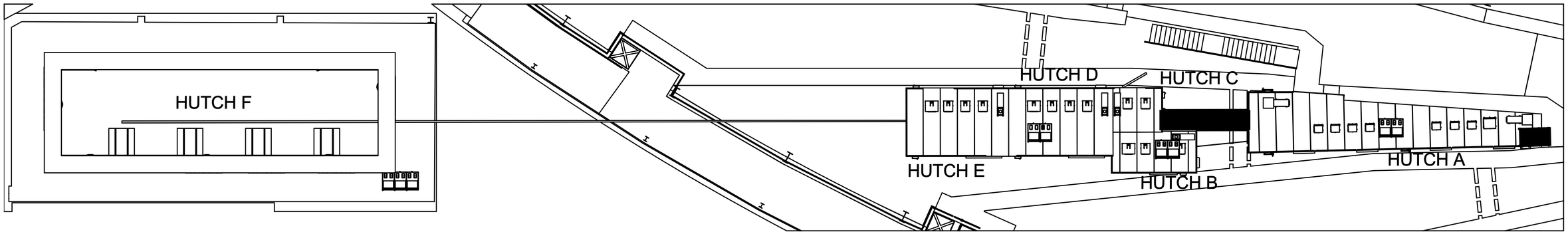

COMPRESSED AIR SYSTEM					
Hutch A	Hutch B	Hutch C	Hutch D	Hutch E	Hutch F
6 OUTLETS	3 OUTLETS	3 OUTLETS	3 OUTLETS	3 OUTLETS	6 OUTLET
2 MANIFOLDS	1 MANIFOLD	1 MANIFOLD	1 MANIFOLD	1 MANIFOLD	2 MANIFOLDS
HUTCH DOORS	HUTCH DOORS	HUTCH DOORS	HUTCH DOORS	HUTCH DOORS	HUTCH DOORS

GN2					
Hutch A	Hutch B	Hutch C	Hutch D	Hutch E	Hutch F
1 OUTLET	1 OUTLET	-	1 OUTLET	1 OUTLET	2 OUTLET

LN2					
Hutch A	Hutch B	Hutch C	Hutch D	Hutch E	Hutch F
-	1 OUTLET	-	1 OUTLET	1 OUTLET	1 OUTLET

HEX COMPRESSED AIR SYSTEM

D SHEET SIZE	PD-HEX-UT-1000 DRAWING/PART NUMBER	4 REVISION
ESH&Q RISK LEVEL A3	SHEET 3 OF 5	

C:\Mech-Eng\LTP\PD\HEX\UT\PD-HEX-UT-1000.dw

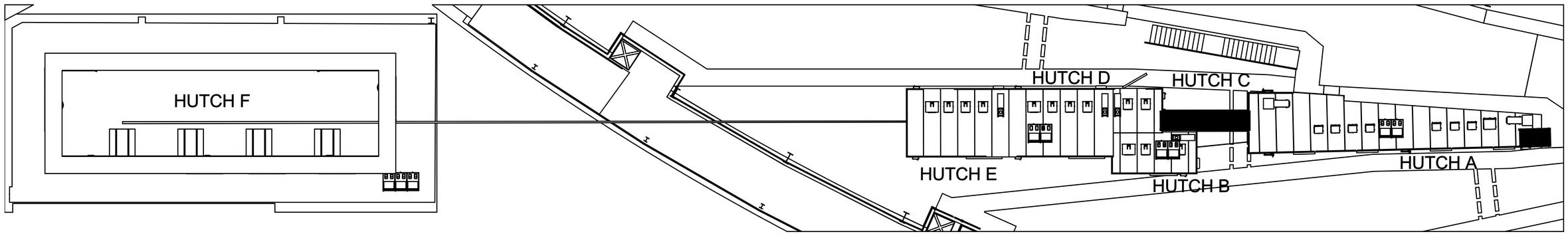

PPS SYSTEM						
ITEM	Hutch A	Hutch B	Hutch C	Hutch D	Hutch E	Hutch F
Search Buttons	2	2	1	2	2	2
Doors	2	1	1	1	1	2
HMI	Y	N	N	Y	N	N
Shutter	3**	0	2 (WC)	0	1(WC)	0
PPS Water Circuit	2	0	1	1	1	1
User Labyrinths	1	1	0	1	1	1

*No Vacuum Sensors in PPS
**Three in full scope, one in initial scope

HEX PPS SYSTEM

D	PD-HEX-UT-1000	4
SHEET SIZE	DRAWING/PART NUMBER	REVISION

ESH&Q RISK LEVEL A3 | SHEET 4 OF 5

C:\Mech-Eng\LTP\PD\HEX\UT\PD-HEX-UT-1000.dw

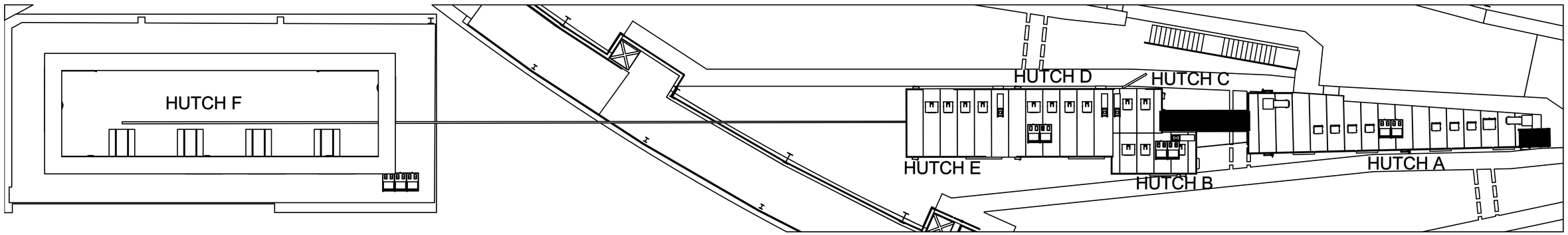

EPS SYSTEM						
ITEM	Hutch A	Hutch B	Hutch C	Hutch D	Hutch E	Hutch F
Thermocouples	40	10	5	10	10	20
Gate Valves	5	1	-	1	1	2
Water Leak Alarms	1	0	1	1	1	1
Flow Sensors	2	0	0	1	1	1

HEX EPS SYSTEM

D SHEET SIZE	PD-HEX-UT-1000 DRAWING/PART NUMBER	4 REVISION
ESH&Q RISK LEVEL A3	SHEET 5 OF 5	

C:\Mech-Eng\LTP\PD\HEX\UT\PD-HEX-UT-1000.dw