REVISION HISTORY					
REV	DESCRIPTION	DATE	DESIGNER	CHECKED BY	ENGINEER
	RELEASE PER ECO	4/10/2018	bkosciuk		

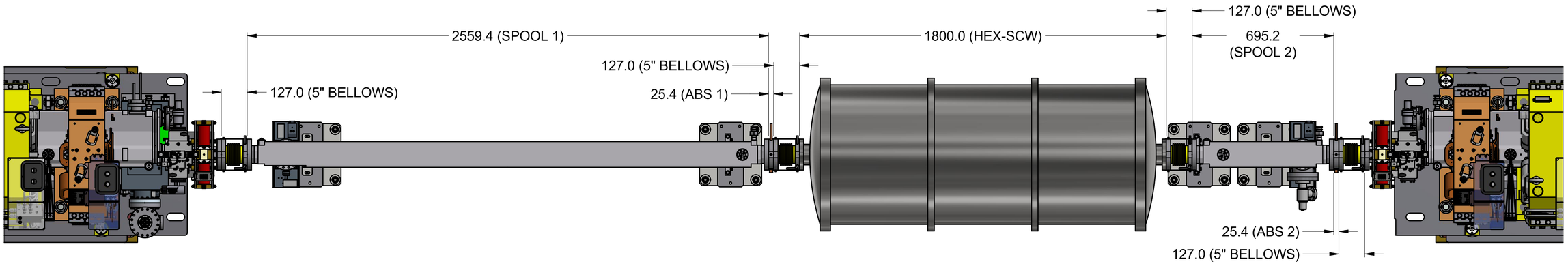

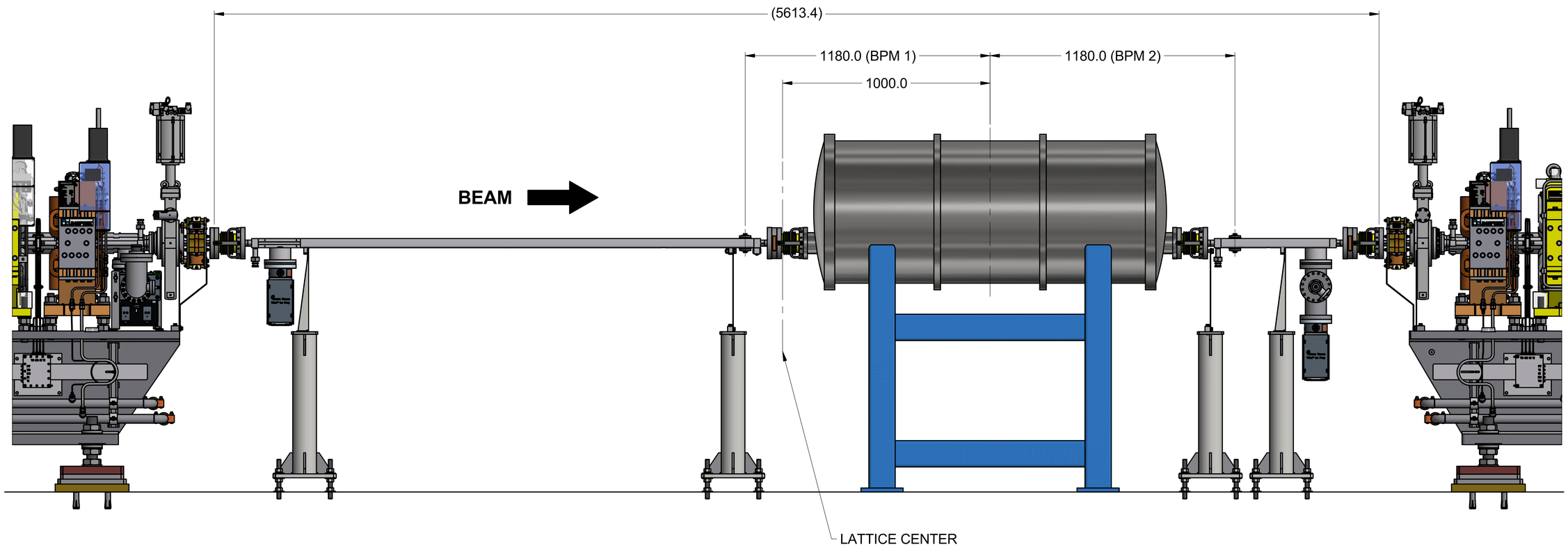

UNLESS OTHERWISE SPECIFIED
ALL DIMENSIONS ARE IN MILLIMETERS

DIMENSIONS IN BRACKETS [xx.xx] (WHERE PRESENT) ARE INCHES AND ARE FOR REFERENCE ONLY

INTERPRET DRAWING AS PER ASME Y14.5-2009

DIMENSIONAL TOLERANCES
X. ± 1.500
.X ± 0.750
.XX ± 0.400
.XXX ± 0.120

ANGULAR TOLERANCE ± .5°

FINISH 3.2

BREAK EDGES & SHARP CORNERS 0.120 MIN. TO 0.750 MAX

THIRD ANGLE PROJECTION

SCALE: SEE DWG VIEW

NEXT ASSY:

BROOKHAVEN NATIONAL LABORATORY

BROOKHAVEN NATIONAL LABORATORY
BROOKHAVEN SCIENCE ASSOCIATES
UPTON, NEW YORK 11973

Exploring Life's Mysteries, Protecting its Future

NSLS II NATIONAL SYNCHROTRON LIGHT SOURCE II

DRAWN BY	B.KOSCIUK	4/10/2018
CHECKED BY		
VACUUM APPROVAL		
ENGINEER APPROVAL		
SUPERVISOR APPROVAL		
ES&H APPROVAL		
QA APPROVAL		

WBS#

STORAGE RING
DIAGNOSTICS, LAYOUT
HEX LAYOUT, C27-S01

D — SHEET SIZE
SR-DG-LAY-3027 — DRAWING/PART NUMBER
REVISION

ESH&Q RISK LEVEL A3

SHEET 1 OF 1

C:\Mech-Eng\LT\SR\DG\LAY\SR-DG-LAY-3027.idw