Jumpstart Processing and Liquid Scattering(JPLS) CONCEPTUAL DESIGN REVIEW

04 October 2017

Mechanical Engineer: D.M. Bacescu

JPLS Concept Design - Outline

1. JPLS Layout @ SMI BL 12-ID, Hutch B
   - Conceptual Design Plan A
   - Conceptual Design Plan B
2. Crystal deflector assembly
   - Linear/Rotation motion assemblies
   - Incident flight tube
3. Sample stage assembly
   - Linear/Rotation motion assemblies
   - Detector flight tube
4. Detector stage assembly
   - Linear/Rotation motion assemblies

LAYOUT OVERVIEW – Conceptual Plan A

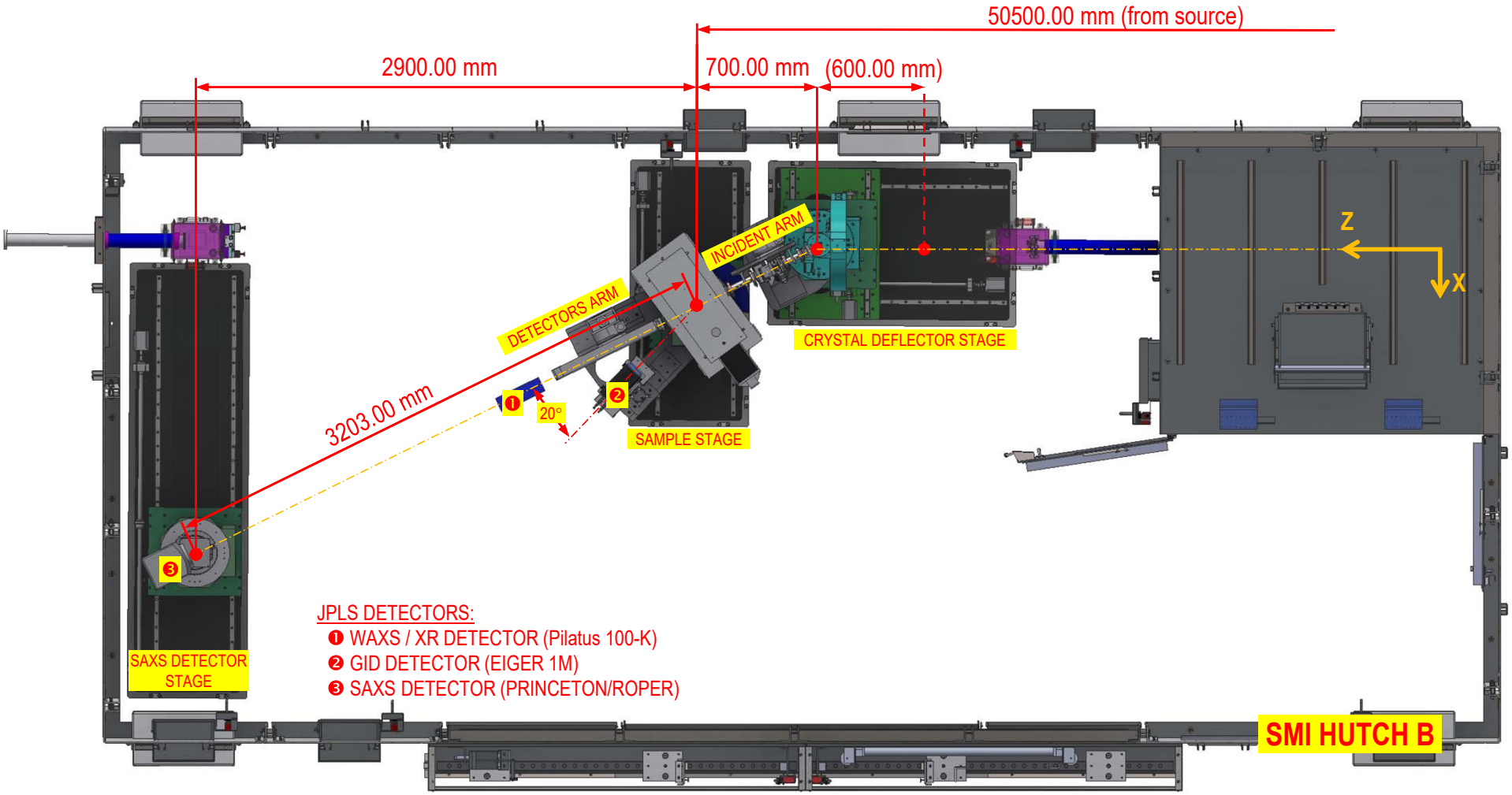

LAYOUT OVERVIEW – Conceptual Plan B

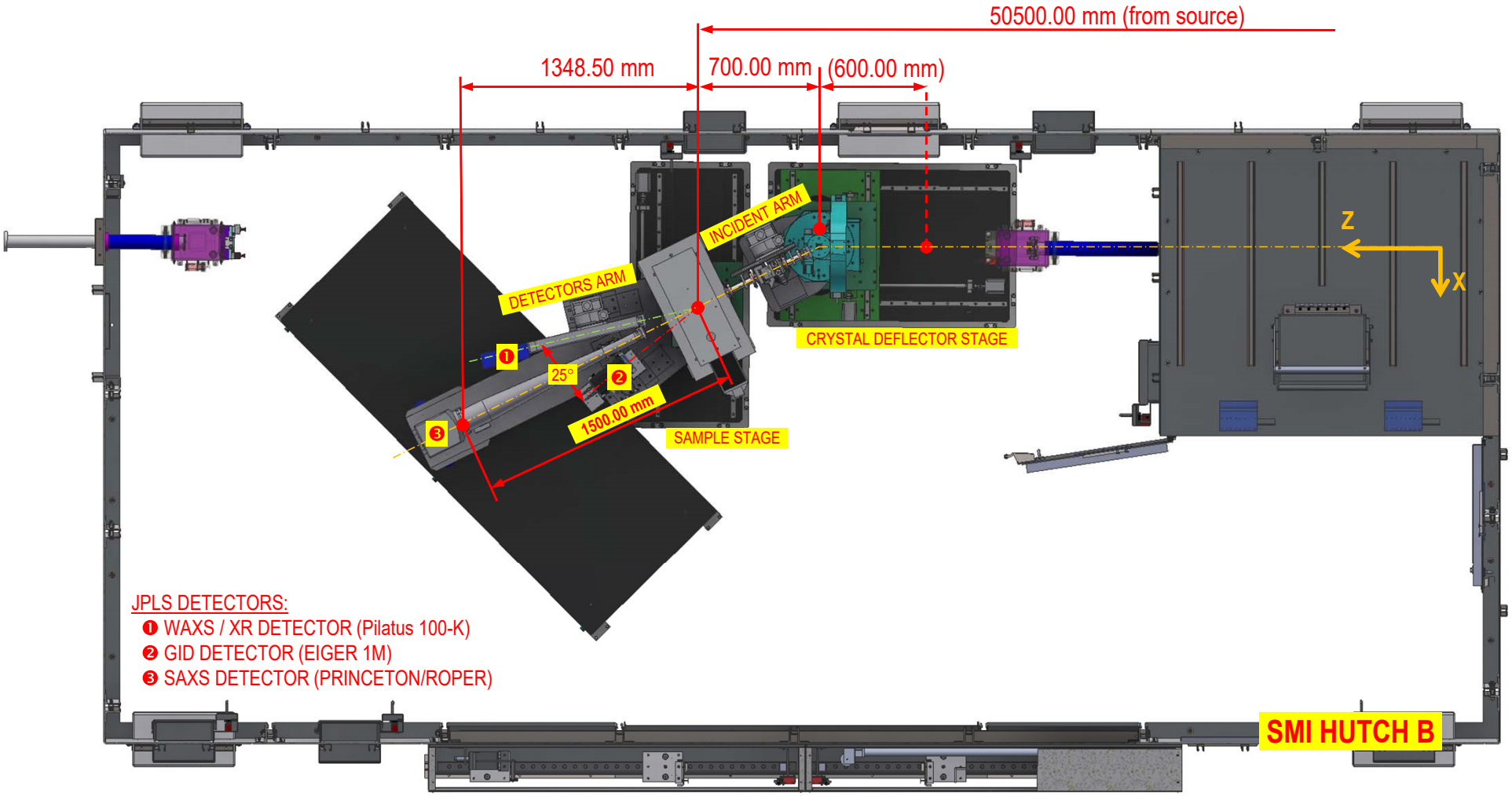

CRYSTAL DEFLECTOR ASSEMBLY

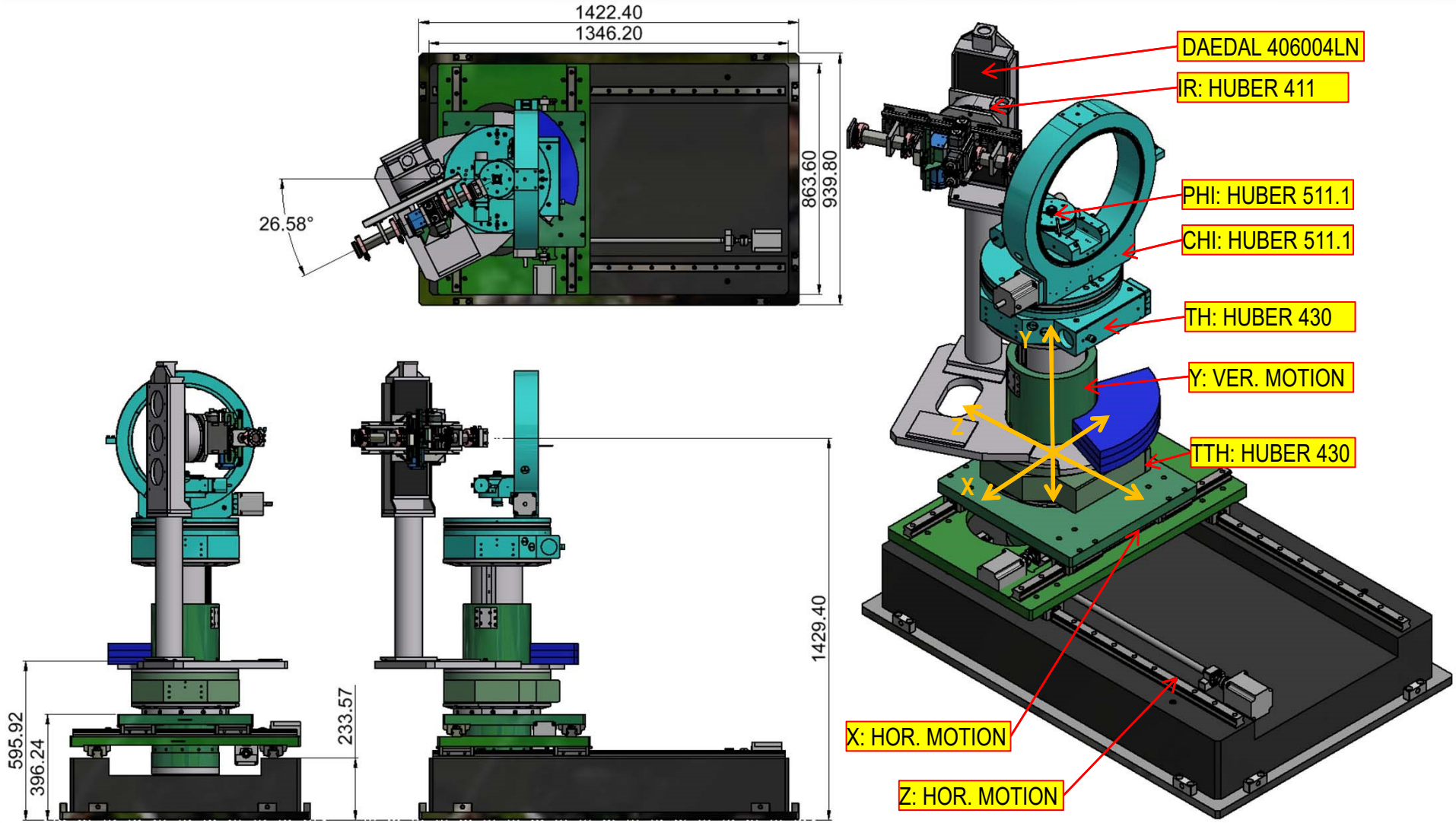

CRYSTAL DEFLECTOR STAGE

X-Y-Z Linear Motion Assembly

CRYSTAL DEFLECTOR LINEAR MOTIONS DETAILS

- X Motion: THK HSR35LA (or equivalent) & Ball Screw & Stepper Motor
  - Stroke: ± 50.0 mm
  - Resolution: 1.0 μm
  - Accuracy: 2.0 μm
- Y Motion: AccuMax CM35AABP/RM35PL650 & Jack Screw & Stepper Motor
  - Stroke: ± 150.0 mm
  - Resolution: 0.5 μm
  - Accuracy: 1.0 μm
- Z Motion: THK HSR35LA (or equivalent) & Ball Screw & Stepper Motor
  - Stroke: ± 350.0 mm
  - Resolution: 10.0 μm
  - Accuracy: 10.0 μm

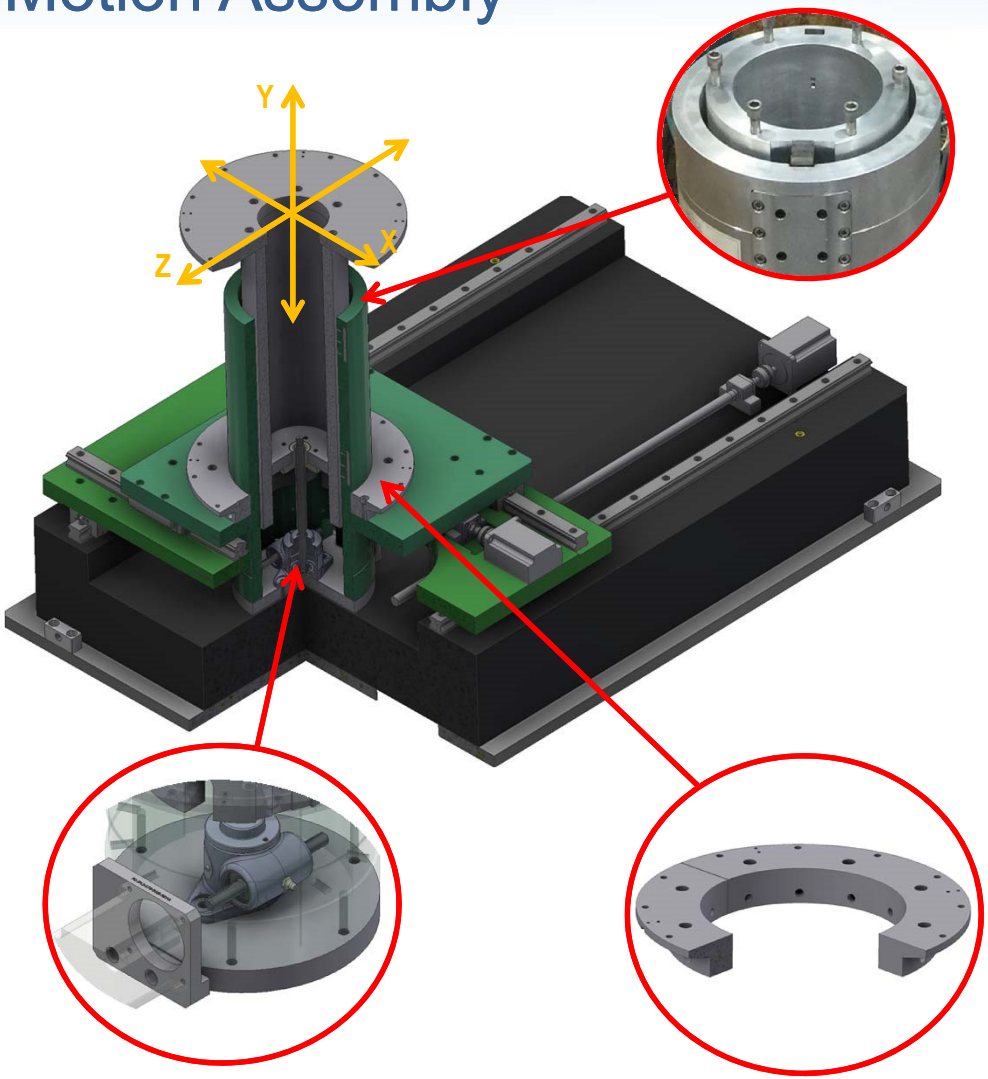

CRYSTAL DEFLECTOR STAGE

HUBER Goniometers (Rotation Stages)

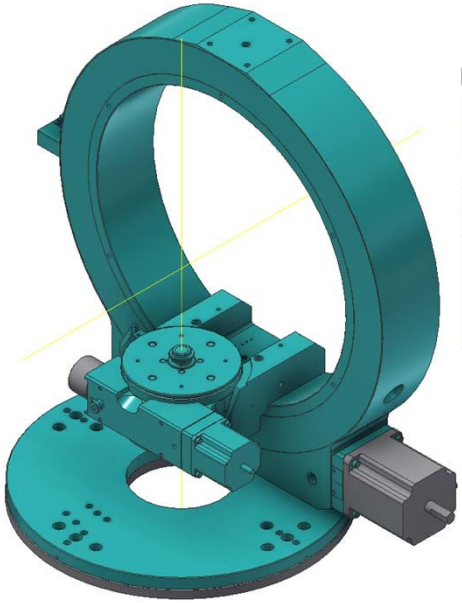

HUBER GONIOMETER 511.1

Specifications:		
Sphere of confusion [mm]:	0.02***	
Parallelity (Chi-plane to Phi-axis) ["]:	+/- 20***	
Weight [kg]:	18	
	Phi-Circle	Chi-Circle
Travel range [°]:	360	360
Gear ratio:	360:1 / 180:1**	360:1
Accuracy ["]:	30	30
Repeatability (unidir.) ["]:	<= 2	<= 2
Reversal error ["]:	<= 10	<= 15
Resolution [°]:	0.001* / 0.002* **	0.001*
Min. drive torque [Nm]:	0.1 / 0.13**	0.8
Flange size [mm]:	56	56

RESOLUTION & ACCURACY SHOULD BE VALIDATED BEFORE PDR.

ALL HUBER STAGES ARE ~20 YEAR OLD!

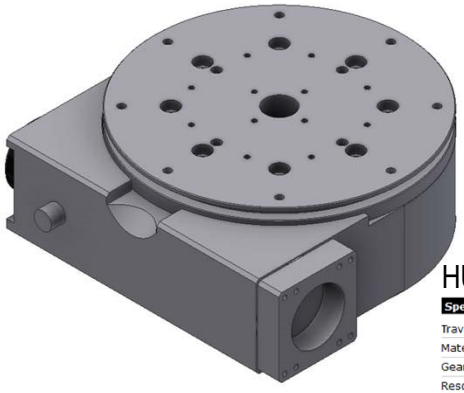

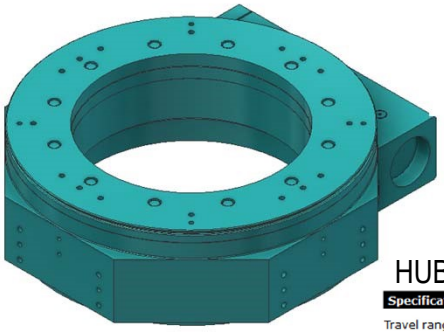

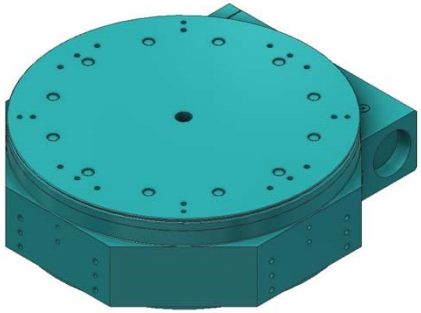

HUBER GONIOMETER 411

Specifications:	
Travel range [°]:	360
Material (housing/worm gear):	Aluminium/Bronze
Gear ratio:	360:1 / 180:1*
Resolution [°]:	0.001 / 0.002* **
	0.0005 / 0.0001 minimum (with gear box 20:1)
Min. drive torque [Nm]:	0.40 / 0.45*
Max. output torque [Nm]:	15 / 18*
Stiffness [µrad/Nm]:	1
Weight [kg]:	6
Flange size [mm]:	56
Transm. aperture [mm]:	20 (standard) - 101

HUBER GONIOMETER 430

Specifications:	
Travel range [°]:	360
Material (housing/worm gear):	Aluminium/Bronze
Gear ratio:	360:1
Resolution [°]:	0.001*
	0.00005 minimum
Min. drive torque [Nm]:	1.5
Max. output torque [Nm]:	100
Stiffness [µrad/Nm]:	0.1
Weight [kg]:	55
Flange size [mm]:	82
Transm. aperture [mm]:	260 (standard)

* step motor, 1000 steps/revolution

CRYSTAL DEFLECTOR STAGE

Incident Flight Path Concept

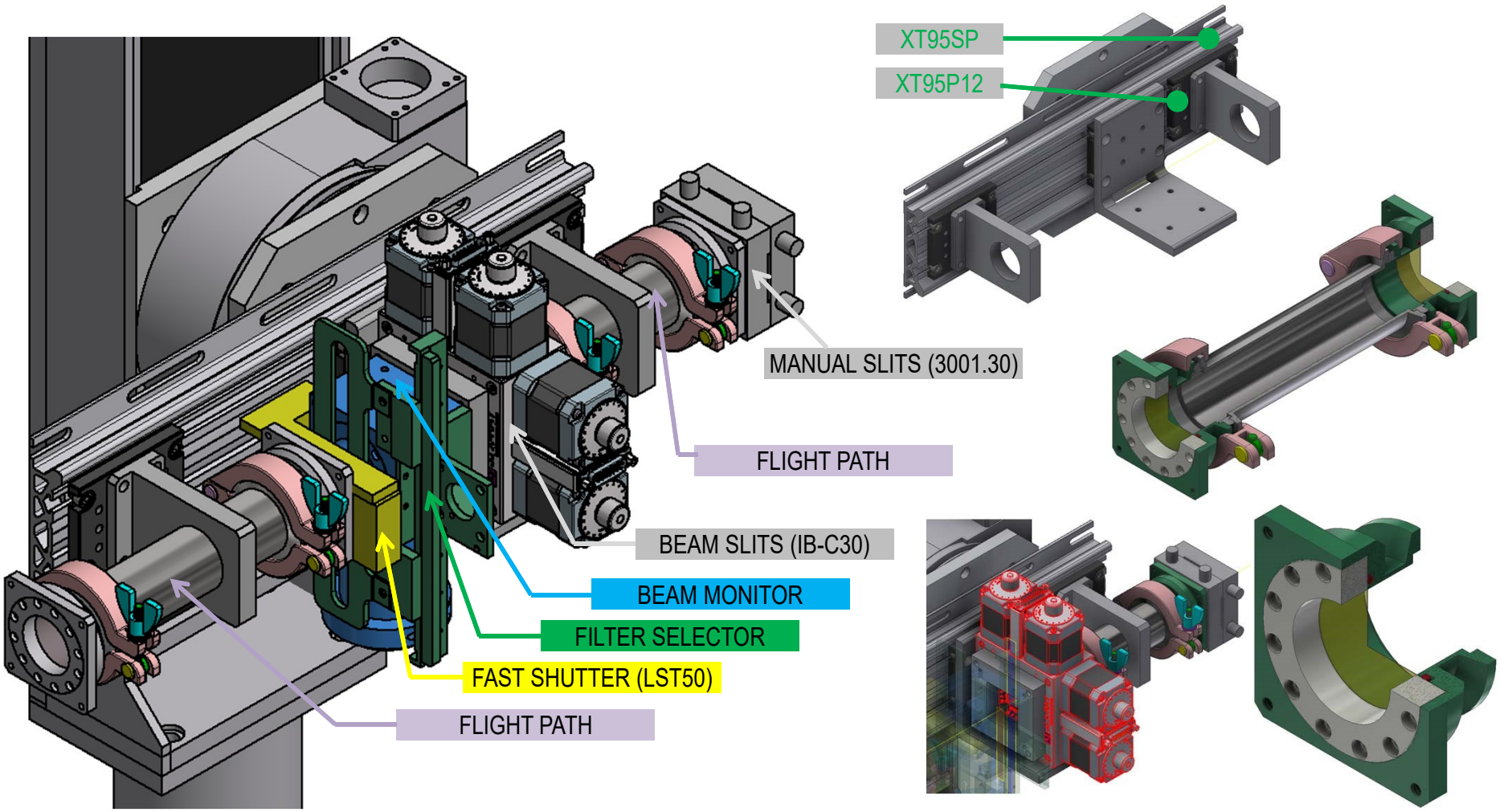

SAMPLE STAGE ASSEMBLY – Conceptual Plan A

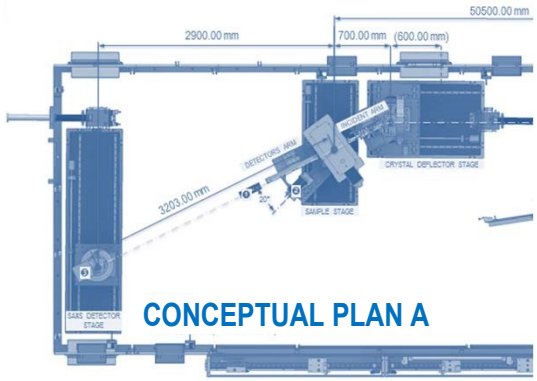

JPLS DETECTORS (Conceptual Plan A):

❶ WAXS / XR DETECTOR (Pilatus 100-K)

❷ GID DETECTOR (EIGER 1M)

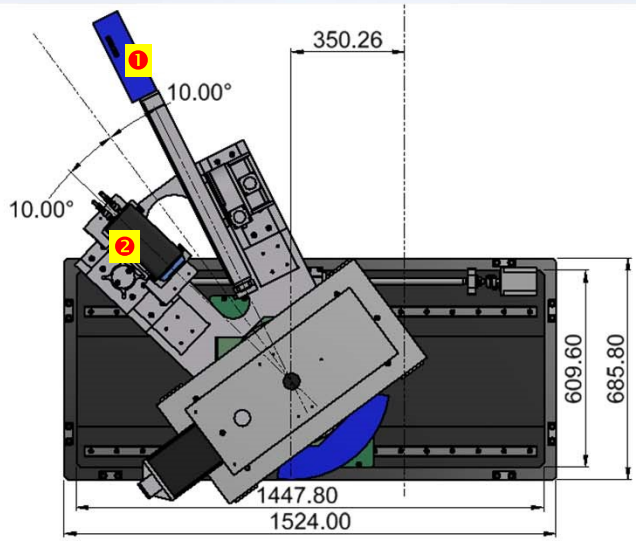

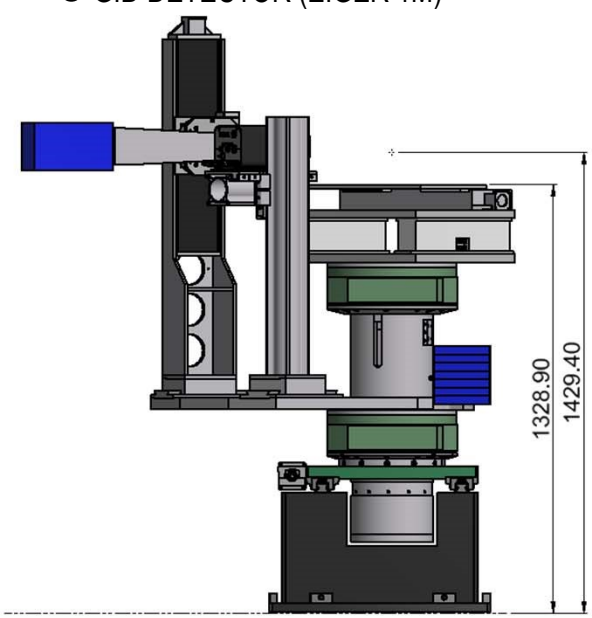

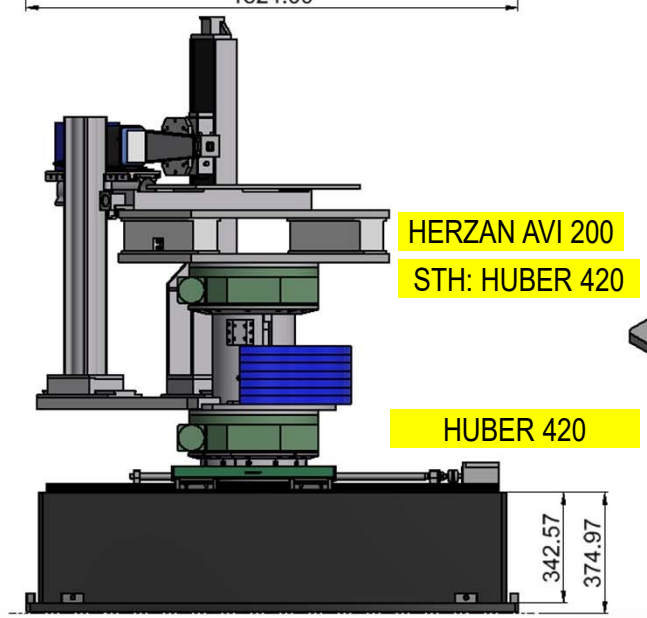

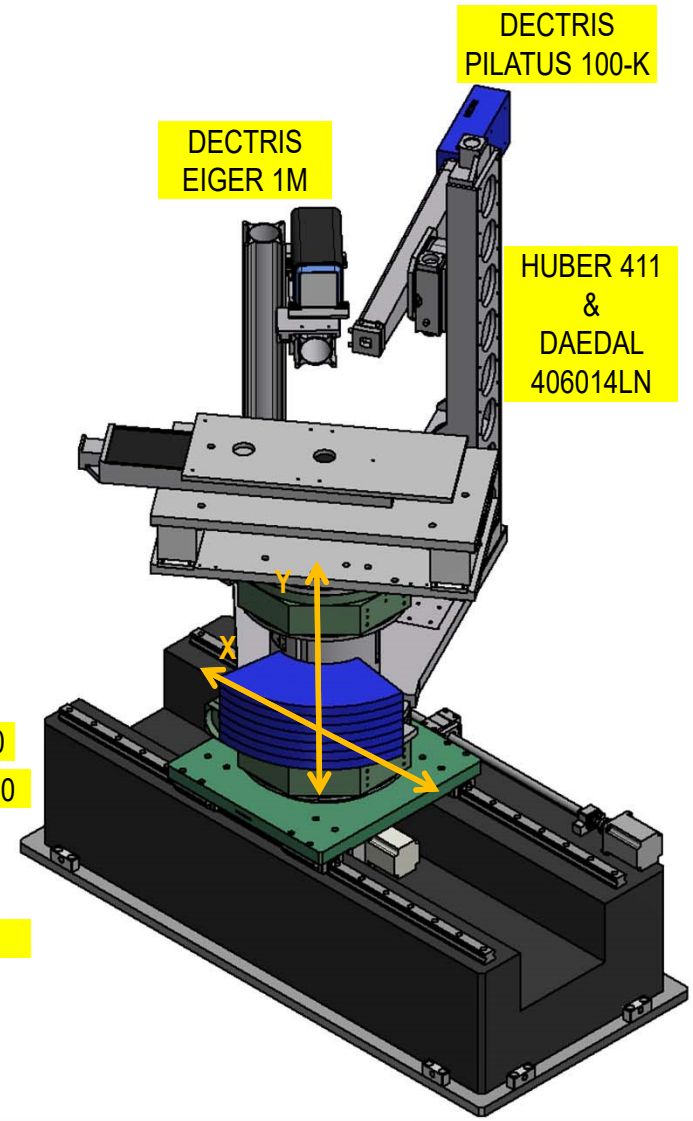

SAMPLE STAGE

X-Y Linear Motion Assembly

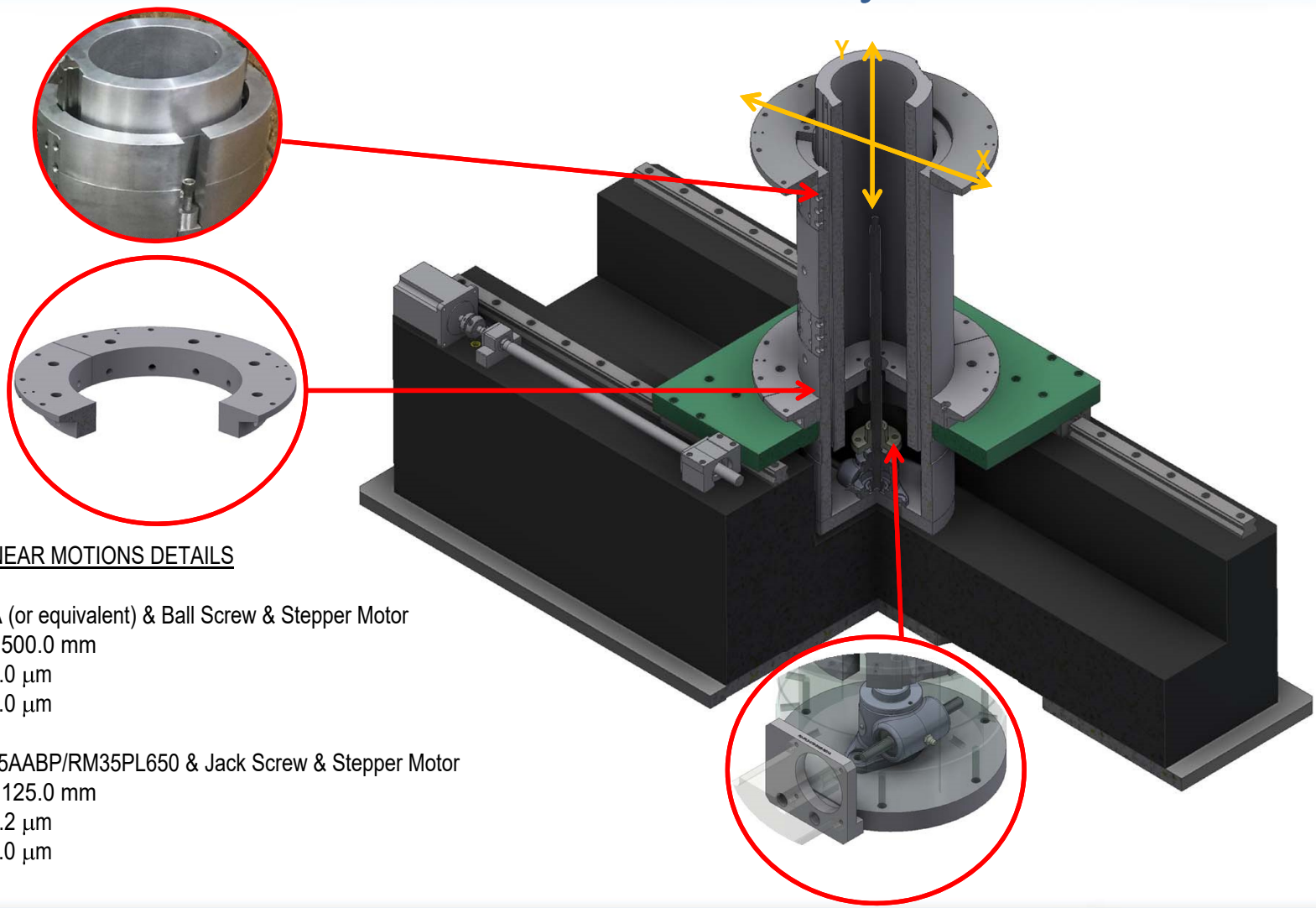

CRYSTAL DEFLECTOR LINEAR MOTIONS DETAILS

- X Motion: THK HSR35LA (or equivalent) & Ball Screw & Stepper Motor
  - Stroke: ± 500.0 mm
  - Resolution: 1.0 μm
  - Accuracy: 2.0 μm
- Y Motion: AccuMax CM35AABP/RM35PL650 & Jack Screw & Stepper Motor
  - Stroke: ± 125.0 mm
  - Resolution: 0.2 μm
  - Accuracy: 1.0 μm

SAMPLE STAGE

Detector Flight Path Conceptual Plan A

Note:
The detector and flight path could be mounted vertical or horizontal.
(Support solution not shown)

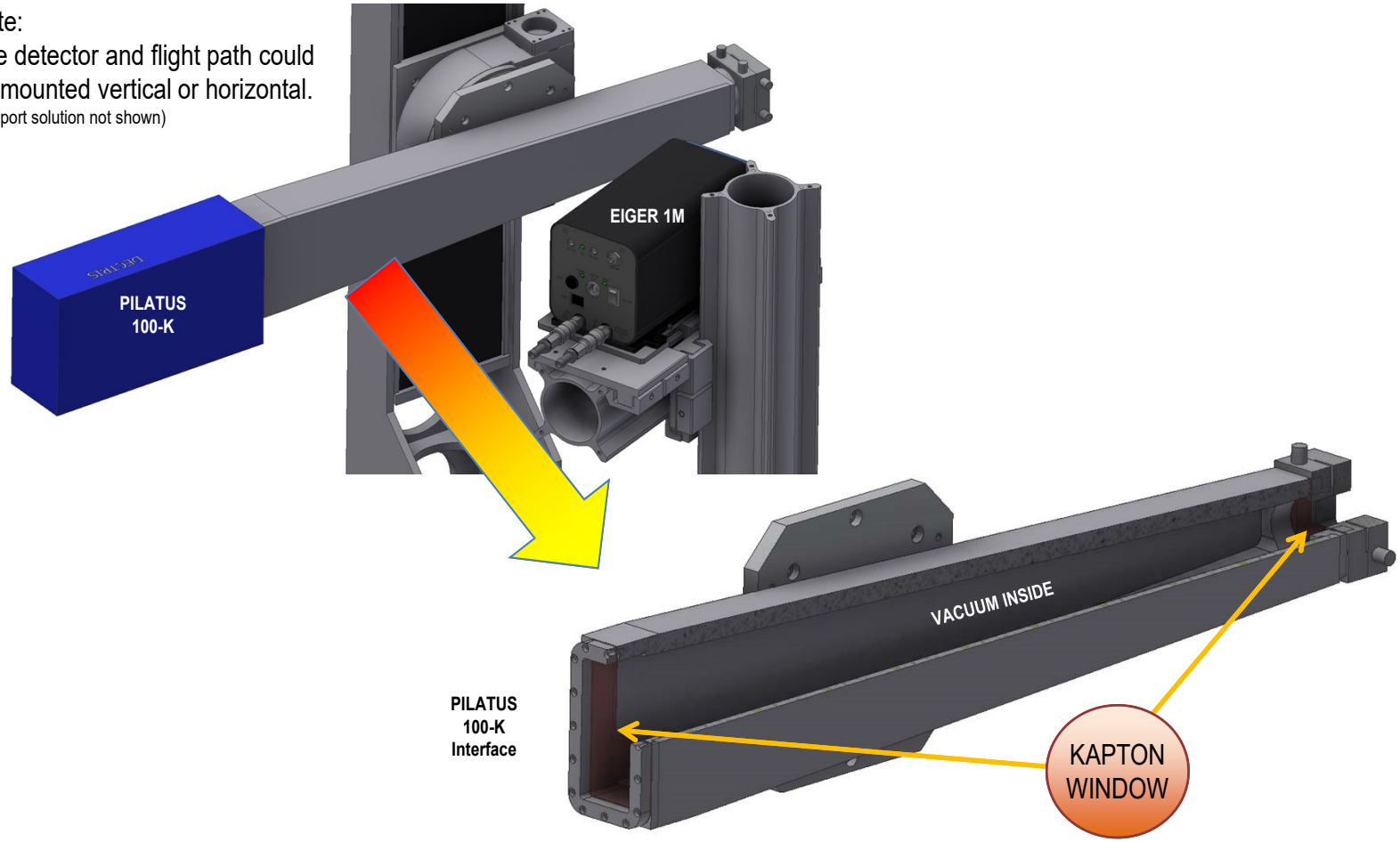

SAXS DETECTOR ASSEMBLY – Conceptual Plan A

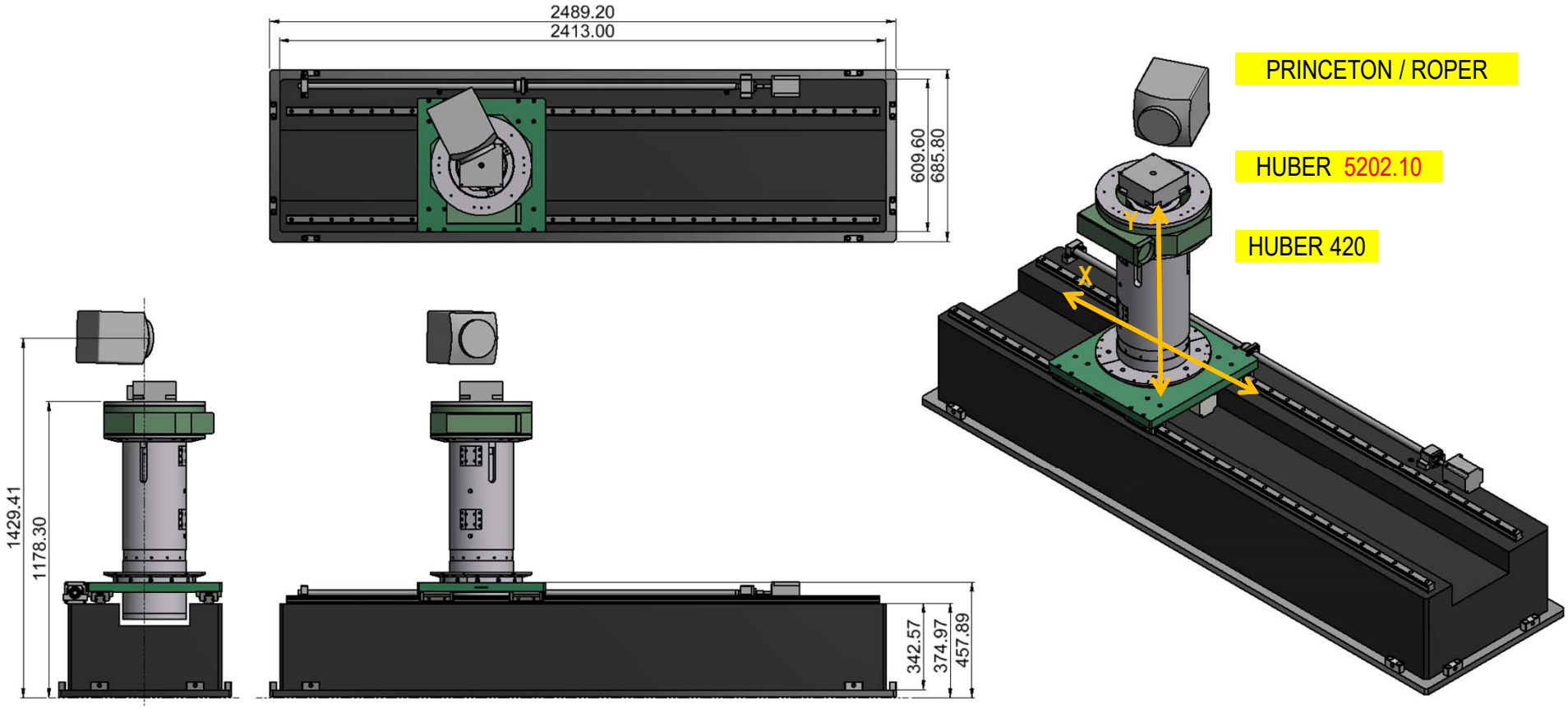

SAXS DETECTOR STAGE

X-Y Linear Motion Assembly

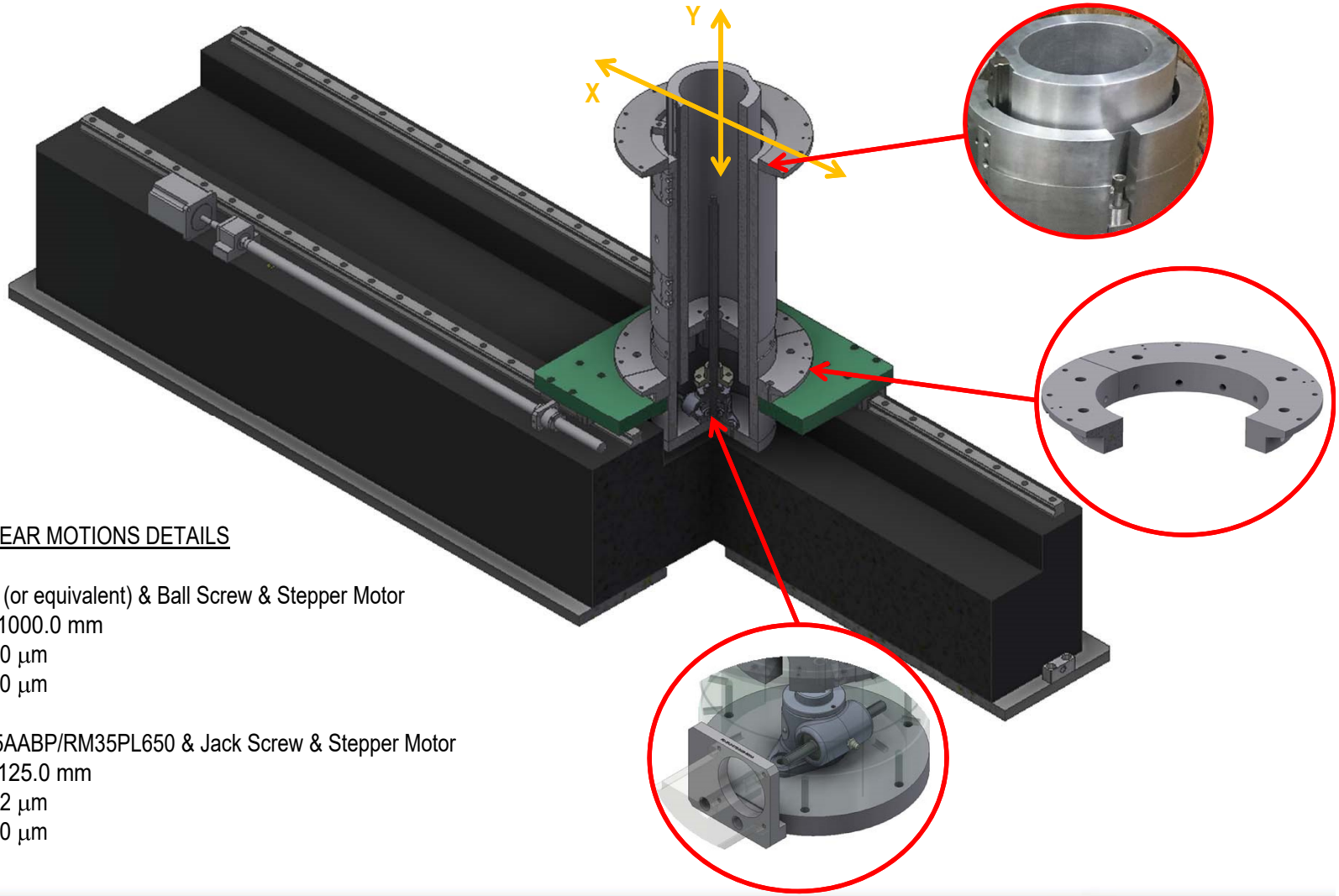

CRYSTAL DEFLECTOR LINEAR MOTIONS DETAILS

- X Motion: THK HSR35LA (or equivalent) & Ball Screw & Stepper Motor
  - Stroke: ± 1000.0 mm
  - Resolution: 1.0 μm
  - Accuracy: 2.0 μm
- Y Motion: AccuMax CM35AABP/RM35PL650 & Jack Screw & Stepper Motor
  - Stroke: ± 125.0 mm
  - Resolution: 0.2 μm
  - Accuracy: 1.0 μm

SAMPLE STAGE ASSEMBLY – Conceptual Plan B

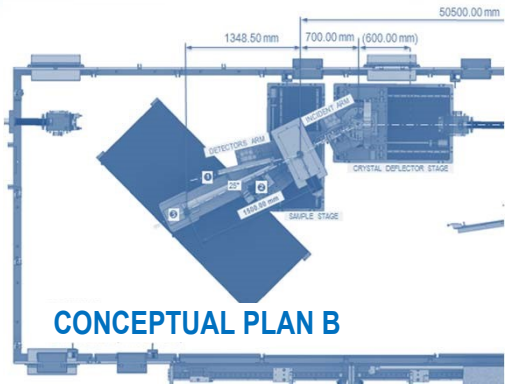

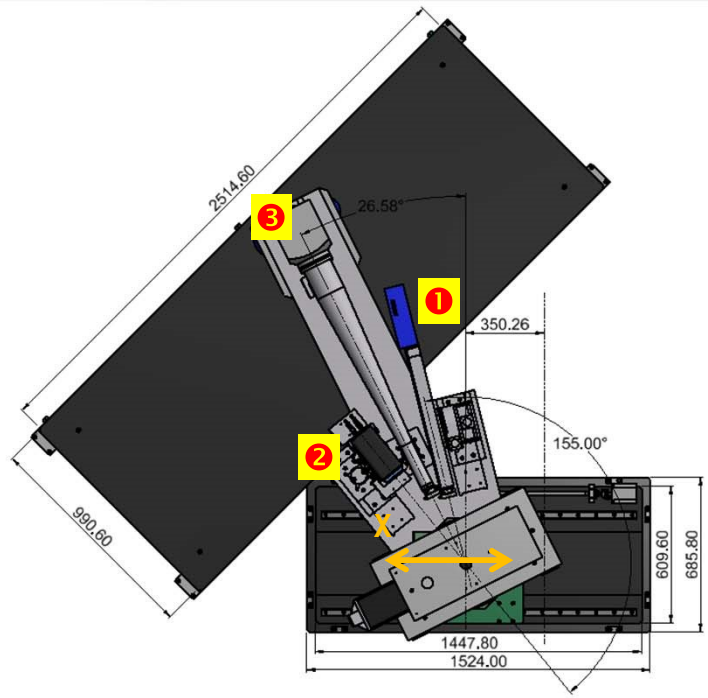

JPLS DETECTORS (Concept Plan B):

❶ WAXS / XR DETECTOR (Pilatus 100-K)

❷ GID DETECTOR (EIGER 1M)

❸ SAXS DETECTOR (PRINCETON/ROPER)

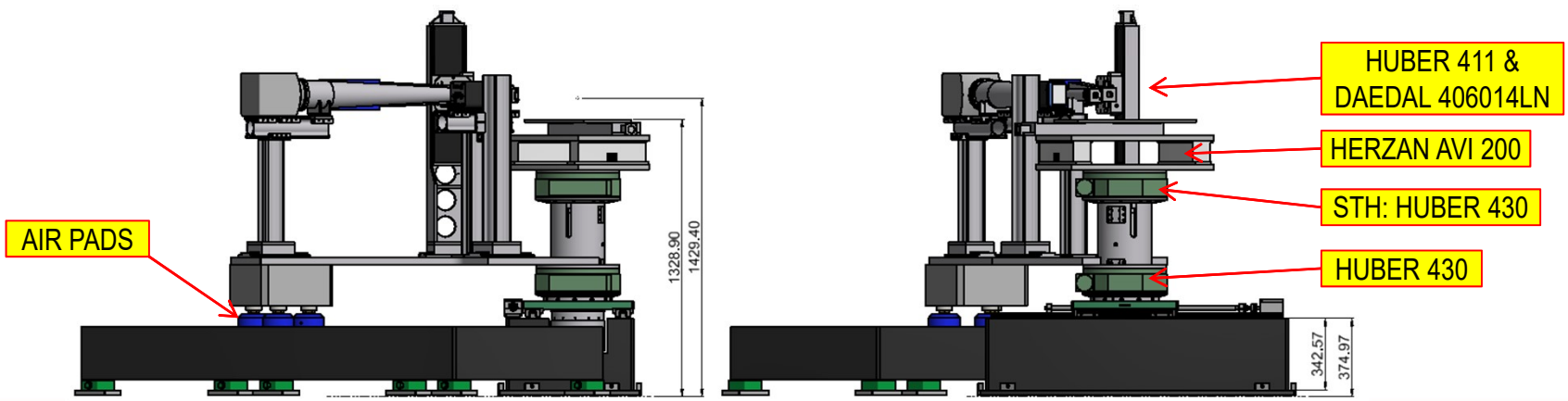

SAMPLE STAGE

Detector Flight Path Conceptual Plan B

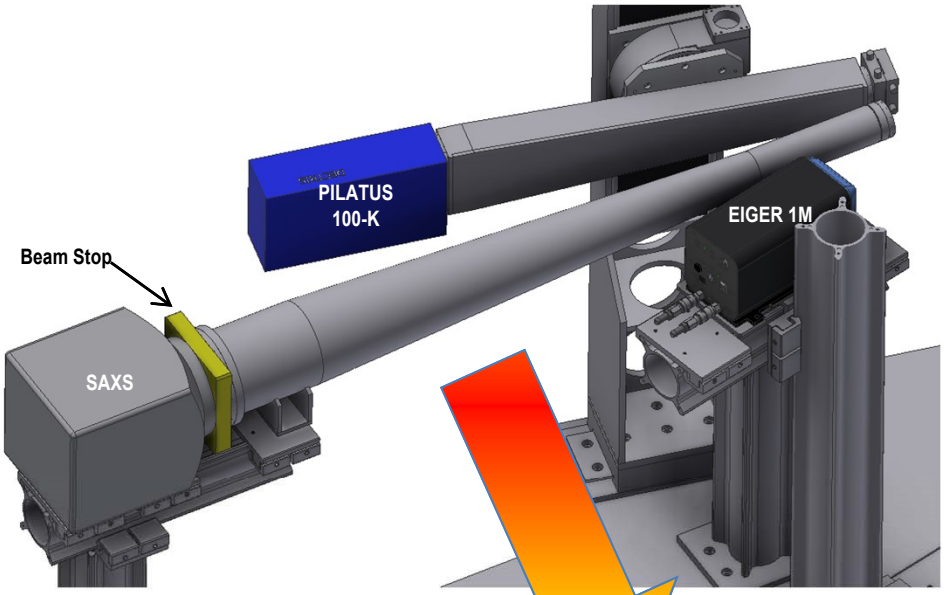

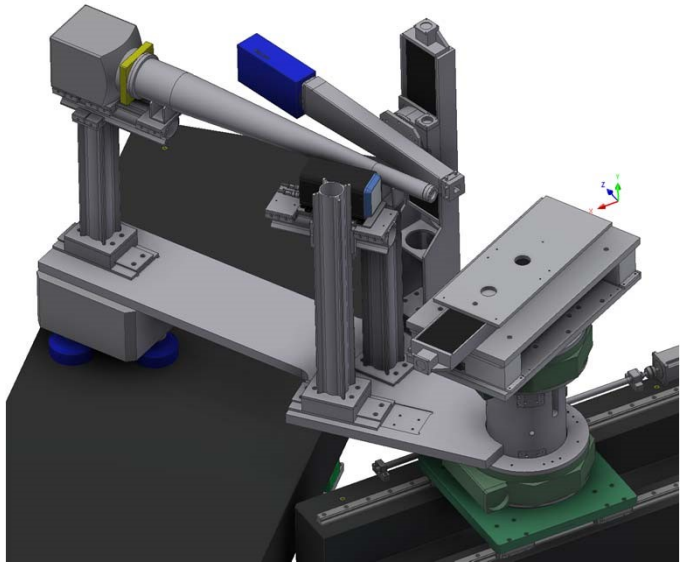

THANK YOU!