# NSLS-II 12-ID JPLS Instrument PDR

**Meeting Date: February 12, 2018**

Introduction

The objectives for this review are to assess the preliminary design of the JPLS instrument, as well as the proposed schedule and cost estimates for its completion. The feedback from the review panel will be used to evaluate the readiness to proceed with the acquisition of the major components of this instrument and development of the final design. It should be noted that some of the components that will be used in this instrument are being repurposed from earlier instruments used at the APS and NSLS.

## JPLS Instrument Preliminary Design Review Panel Charge Questions

### (1) Does the preliminary design support the JPLS scientific objectives?

Yes - The review team agrees that the preliminary design supports the scientific objectives. However, the review team has concerns about possible beam damage to samples. The current design has features that could address these concerns, however the review team recommends continuing to explore options to mitigate sample damage. See report below for further discussions and recommendations.

### (2) Is the preliminary design mature enough to proceed to the final stage of engineering design development?

Yes – based on the review material the team feels that the design is ready for final engineering design. Recommendations below need to be reviewed and incorporated into the final design.

### (3) Has readiness to proceed with the acquisition of the major mechanical components been demonstrated?

Yes – The JPLS team needs to resolve the number of baseplate wedges based on the recommendations below and any other recommendations that may affect the design prior to procurement.

### (4)Have the costs and schedule been developed with sufficient detail to establish the project baseline?

Yes- Refinement of estimates have added sufficient detail to the planning. However, schedule should include sufficient details for evaluating and testing existing components.

### (5) Does the design present technical risks? Does the design present scientific risks?

Scientific risks include damage to samples and accessible length scales (see charge item #1). Greatest technical risks includes the refurbishment of existing equipment, specifically to address the accuracy and wobble of the chi stage and the load capability of the sample stage.

**(6) Are there safety concerns related to the installation and operations of JPLS?**

Safety concerns of the review team are noted in the safety section below. The main concern is protecting personnel from moving equipment and space constraints within the hutch.

**(7) Does the design offer affordances for future upgrade paths such as (1) secondary focusing with CRLS, (2) a double crystal deflector, and (3) a canted undulator and new photon delivery system?**

Yes-

7-1 See recommendation below. Ensure adequate space is preserved for possible focusing solutions.

7-2 Yes- The team has considered this issue and there is the possibility of adding a DCD to the current design with concerns raised in the body of the report.

7-3 The review team notes that if the detector/sample stage granite needs to be moved for the canted beamline configuration that motor cables should be terminated such that the granite can be slid over (eg. leave extra length), and that there is sufficient clearance between the granite and hutch wall.

**Meeting Notes:**

Background/Overview

The JPLS, short for 'jump starting' the Processing Liquid Scattering beamline, instrument involves repurposing components from NSLS beamline X22B and a liquid spectrometer from APS to build an endstation that will be capable of liquid scattering techniques. JPLS will share beam time with SMI via a removable beampipe in the B hutch until funding becomes available for build-out of a canted insertion device beamline at 12-ID. The project is anticipated to be completed in July 2019, pending funding availability, with a current estimated cost of $1.9M.

The design of the JPLS instrument as presented includes a single crystal deflector assembly and a sample stage assembly which includes three detectors. The detectors are for SAXS, WAXS and X-ray reflectivity.

Ron provided an overview of the Complex Scattering Program. The goal of the Complex Scattering program is to achieve a balance of fundamental and applied research. The JPLS instrument intends to do both of these. An overview of the Complex Scattering Programs suite of beamlines was presented.

Goals for JPLS:

- Open design for high versatility
- Uses existing hardware from previous APS and NSLS instruments
- Fits into existing hutch with minimal modifications
- Keeps Single Crystal Deflector design of previous instruments- *capable of upgrade to Double Crystal Deflector*
- Efficient switch-over from liquids to processing configuration
- Optimized for high energies (~20keV)

A question was raised by Dean regarding the overlap and similarities between the JPLS instrument and CMS capabilities. Ron and Ben explained that for processing it will incorporate a wider platform and higher brightness beam. Dean thinks this is not a big advantage for soft materials. See further details below in the scientific section in regards to this topic.

Scientific

The SMI beamline uses adjustable bi-morph focusing mirrors that allow the beam to be tuned and focused in essentially an infinite number of configurations. This allows the beam to be focused at the SMI or JPLS endstation sample positions with definable beam spot size. The vibration specification for SMI at the sample position is < 1um with active feedback using X-BPM's and implementation of intensity feedback on the DCM using HFM drain current measurements.

The design of the SAXS arm detector arrangement has been fixed now at a distance of 1.5m from the sample position as a result of recommendations at the CDR. This will allow easier setup of experiments.

If a longer distance is ever needed these mechanics can be removed and a temporary flight path can be fitted. The design allows for SAXS and WAXS detection simultaneously.

A concern was raised regarding the intensity and high brightness of the beam damaging soft materials. There is currently only a fast shutter at the SMI endstation downstream of where the JPLS instrument will be located. The JPLS team indicated they have incorporated sufficient controls to mitigate beam damage. The controls include 1) tunable beam dimensions (it would be better to know how large the beam could be made however), 2) a 10 ms shutter to control exposure time, and 3) a set of programmable filters & attenuators.

The review team noted all of these elements are critically important to be able to control sample damage in different ways. The ability to make the beam broader horizontally is the most important because it simultaneously recruits more of the sample volume to increase scattering signal while reducing beam damage. The attenuator is a close second because it provides a means to cut the overall beam intensity in a reproducible way.

The review panel had concerns that the current low-Q estimate of 0.001 A^-1 did not consider a beam stop appropriately sized to block the beam and particularly the beam tails. Other SAXS capabilities at NSLS-II have a larger low-q limit with a much larger sample-detector distance (e.g. CMS with 5m distance has low-q limit of ~0.003 A^-1). If the J-PLS low-q limit is substantially larger (e.g., >0.003 A^-1), it might significantly limit the science cases that could be considered for the beamline.

<u>Recommendation</u>: Perform a full calculation/simulation for the low-q limit(s) in SAXS mode. The calculation should be done at different beamstop sizes for the full range of energies and for beam dimensions possible.

The beamline plans include specific plans for sample alignment of planar solid samples or substrates (used to study coating processes) instead of liquids. While the review team finds the JPLS team's proposed solution for incident angle reproducibility and accuracy for non-liquid materials as excellent, having tilt capability on the sample allows for greater flexibility for this alignment.

<u>Recommendation</u>: Consider adding a tilt stage/goniometer option for the sample stage for non-liquid experiments and how it can be integrated with the processing equipment.

In the current design a set of filters/absorbers are located between the beam-defining slits and the sample which will inhibit SAXS.

<u>Recommendation:</u> A separate set of absorbers is needed upstream of the slits for SAXS measurements.

X-ray reflectivity small angle scattering and wide angle scattering. Current design is a 1- crystal deflector design that will be capable of upgrade to a double crystal deflector.

In the current design Soller slits will not be used –the review team notes that Soller slits are helpful to cut down background noise. Soller slits would also be useful if the x-ray reflectivity arm is used for grazing incidence diffraction/scattering measurements.

Recommendation: Consider including the capability to add Soller slits in the reflectivity arm.

Recommendation: For the future incorporation of a CRL consider alternatives to Be lenses including Kinoform and Al lenses to have space provisions for these capabilities.

If plan is to eventually add second crystal (DCD) a more robust chi stage may be preferred.

Recommendation: Consider purchasing a larger more robust chi stage to enable the use of double crystal configuration in the future and ensure the current layout enables the use of this at all energies and will not interfere with the SMI beampipe when in parked position. Engage with potential vendors to find realistic chi stage capabilities to prevent over spec'ing.

**Engineering**

Daniel provided an overview of the engineering aspects of the JPLS instrument. The major components are a crystal deflector stage and sample stage which includes three different detectors.

JPLS will share beam with SMI. Beam will be intercepted in the B hutch upstream of the SMI endstation. A section of shielded removable pipe will be removed and the crystal deflector of the JPLS instrument will be driven into position. A Be window will be attached to the existing beampipe of SMI then the flightpath to the crystal deflector will be installed. This Be window is on hand and part of the removable pipe procedure.

All X-Y-Z motions for crystal deflector and sample stage are similar motions and are motorized with 2-phase stepper motors. Z-motion will be rack and pinion with a backlash compensator. These motions are situated on dedicated granite blocks that will be purchased. Both granite blocks will be placed on 4 wedge mount blocks.

The sample stage assembly is mounted on a granite block and includes all three detectors. Granite blocks will be installed using casters.

Recommendation: Consider the installation steps of the granite blocks and check whether the casters will be removable when the granite is in its final position.

A question was raised regarding how placing the granite blocks on wedge mount blocks affects the transfer function of vibrations.

Recommendation: Perform vibration measurements of existing systems with wedge mount blocks and granite supports and analyze.

The review team noted that a 4 wedge mount configuration may result in difficulties aligning the block and present problems with stability.

Recommendation: Consider using 3 wedge mount adjustors instead of 4 to make alignment easier.

Recommendation: Holes with threaded inserts should be included for mounting a plate near the cut-out in the granite block for the sample stage.

The sample stage is capable of holding samples up to 200 kg. Consider these heavier samples and where their centers of gravity will be located when designing the plate for the samples.

Recommendation: Test the sample stage with simulated loads to verify performance.

While attenuators can be used to prevent the beam from damaging the SAXS detector, this is not a preferred solution to avoid damaging the detector during beam setup or commissioning.

Recommendation: Add beam stop paddle to SAXS detector design to prevent undesired beam damaging the detector.

Recommendation: Confirm that the Pilatus detector for WAXS includes a protective cover/lid and consider an additional horizontally sliding guillotine style cover.

Recommendation: Consider user access to sample stage and possibly add pads or ways to add protection to granite and users.

Action: If users will need to climb on to granite consult with ESH on whether a step is needed and ways to prevent someone from stepping into trough.

The review team noted that there are no beam diagnostics between the deflector and the SSA.

Recommendation: Evaluate whether beam diagnostics are required upstream of the SCD for alignment or if BPM3 is sufficient.

**Controls**

Instrument controls will be NSLS-II standard delta tau motion controls. Racks and controllers have already been installed under the NEXT project. Cables are run but need to be terminated in the hutch. Existing 5 phase stepper motors will be replaced with 2 phase steppers. New IOC server and network switch to be installed.

No vacuum instrumentation is included in current EPS; roughing vacuum only for flight paths.

Recommendation: Consider data collection for burst configuration of the Pilatus SAXS detector.

Recommendation: Implement synchronization between detector and fast shutter for preventing sample damage.

**Cost and Schedule**

Current funding scope is through finalization of the PDR report. Milestones coming up in the short term schedule include having the FDR in June and procurement of long lead components such as granite and slides in March. It was noted that there are 10 months between major milestones of FDR and installation completed. It is not clear which activity includes the refurbishment/testing of reused components.

Recommendation: Based on the importance of the refurbishment of existing components it is suggested to separate this out. Consider planning and scheduling to setup existing equipment and plan for equipment that needs to be tested, refurbished/upgraded and potentially re-tested.

Installation of equipment needs to be coordinated with SMI to ensure no conflicts.

The schedule shows that DAMA testing completed prior to receiving detectors.

Recommendation: Revise schedule to show this testing to be completed more aligned with detector receive-and-install and revisit staffing of DAMA.

The review team noted that the project calls for technician support of .5 FTE.

Recommendation: Review staffing requirements for the project and ensure these resources are available.

There is no contingency for the project. Significant technical risks identified with refurbishment of components and testing. Various smaller scale components were also identified to be required and will need to be added to the project.

Recommendation: Consider a contingency plan in the event there are issues with refurbishment and testing of reused components. Consider adding a miscellaneous budget item that will take up small budget overruns and small additions, without immediately 'breaking' the overall budget.

ESH:

Action: Consider controls for preventing SAXS collision with hutch walls and controls for pinch points and controls to prevent collisions with the SMI beam pipe during JPLS experiment setup/teardown.

Action: Ensure re-used equipment is in accordance with current NSLS-II requirements. A list of electrical components needs to be made and sent to electrical engineering for EEI.

A snorkel exhaust will be the minimum exhaust required for experiments. Airborne monitoring may show that an experimental enclosure will need to be considered.

The design needs to ensure that the JPLS equipment can be moved out of the way for the SMI beam pipe installation, and that personnel will have adequate clearance around the granite table to avoid ergonomic challenges.

Action: A plan needs to be developed for the storage/movement of the SMI beam pipe when JPLS is in use.

Action: Check whether the shielding of the hutch downstream wall is sufficient to stop the mis-steered beam or if additional shielding (like the beamstop in other hutches) is required.

QA: Included in comments above.

Review Committee members:

Steve Sherwood (Chair)
Scott Coburn (Engineering)
Dean DeLongchamp (Science)
Masa Fukuto (Science)
Oleg Konovalov (Science)
Lori Stiegler (ES&H)
Yuke Tian (Controls)
Lutz Wiegart (Science)
Misha Zhernenkov (Science)
Joseph Zipper (QA)

Attendees:

Refer to attached attendance sheet

2/23/2018

X

Stephen Sherwood
Research Operations Support Engineer
Signed by: Sherwood, Stephen

## Sherwood, Stephen

| | |
|---|---|
| **Subject:** | JPLS Preliminary Design Review |
| **Location:** | Bldg. 743 Rm 156 |
| **Start:** | Mon 2/12/2018 9:00 AM |
| **End:** | Mon 2/12/2018 2:30 PM |
| **Recurrence:** | (none) |
| **Meeting Status:** | Meeting organizer |
| **Organizer:** | Sherwood, Stephen |
| **Required Attendees:** | Sherwood, Stephen; Wiegart, Lutz; Tian, Yuke; 'schloss@uic.edu'; 'konovalo@esrf.fr'; Moss, Steven H; Pindak, Ronald; Johnson, Erik D; Hulbert, Steven; Zhernenkov, Mikhail; Coburn, David Scott; Stebbins, Christopher; Yin, Zhijian; Stiegler, Lori; Zipper, Joseph; Fukuto, Masafumi; Zschack, Paul; Berman, Lonny; Ackerman, Andrew; Bacescu, Daniel; 'dean.delongchamp@nist.gov'; Ocko, Benjamin |
| **Optional Attendees:** | Selgrad, Peter |
| **Resources:** | Bldg. 743 Rm 156 |

Dear All,

You are invited to participate in a Preliminary Design Review (PDR) for the JPLS instrument, which will be installed at 12-ID. The site for the review is being finalized and a link will be sent out next week. The agenda, formal charge and presentations for the review will be posted there.

The review team will consist of:

Steve Sherwood (Chair)
Scott Coburn (Engineering)
Dean DeLongchamp (Science)
Masa Fukuto (Science)
Oleg Konovalov (Science)
Lori Stiegler (ES&H)
Yuke Tian (Controls)
Lutz Wiegart (Science)
Misha Zhernenkov (Science)
Joseph Zipper (QA)

Thank you,
Steve

**JPLS Preliminary Design Review**

**February 12, 2018**

**Building 743 Room 156**

# Charge Questions

(1) Does the preliminary design support the JPLS scientific objectives?

(2) Is the preliminary design mature enough to proceed to the final stage of engineering design development?

(3) Has readiness to proceed with the acquisition of the major mechanical components been demonstrated?

(4) Have the costs and schedule been developed with sufficient detail to establish the project baseline?

(5) Does the design present technical risks? Does the design present scientific risks?

(6) Are there safety concerns related to the installation and operations of JPLS?

(7) Does the design offer affordances for future upgrade paths such as (1) secondary focusing with CRLS, (2) a double crystal deflector, and (3) a canted undulator and new photon delivery system?

# JPLS Preliminary Design Review
# February 12, 2018
# Building 743, Room 156

## Agenda

| Time | Description | Presenter |
|---|---|---|
| 8:30 – 9:00 | Panel Executive Session | Review Panel |
| 9:00 – 10:15 | Complex Scattering Program/JPLS Overview | Ron Pindak |
| | SMI Beamline Performance and Status | Mikhail Zhernenkov |
| | Scientific Overview and Strategy/ES&H | Ben Ocko |
| 10:15 – 10:30 | Break | All |
| 10:30 – 11:15 | Engineering & Design | Daniel Bacescu |
| 11:15 – 11:30 | Controls & EPS | Zhijian Yin (ZY) |
| 11:30 – 11:45 | Cost & Schedule | Chris Stebbins |
| 11:45 – 12:15 | Beamline Tour | All |
| 12:15 – 13:00 | Lunch and Q&A | Reviewers & Presenters |
| 13:00 – 14:00 | Panel Discussion | Panel |
| 14:00 – 14:30 | Close out | All |

**12-ID JPLS Instrument Preliminary Design Review**
**Attendance Sheet**

Date: February 12, 2018

| Name | Title | Department/Division or Company |
|---|---|---|
| Yuke Tian | Acc. Control group leader | Photon Science, BNL |
| Dean DeLongchamp | Group Leader | NIST |
| Lori Stiegler | ESH | NSLS-II |
| Misha Zhernenkov | Scientist | NSLS-II |
| Oleg Konovalov | | |
| Masa Fukento | | NSLS-II |
| STEVE SHERWOOD | ROS ENGINEER | NSLS-II |
| Lutz Wiegart | | NSLS-II |
| JOE ZIPPOR | QA ENG. | NSLS II |
| Ron Pindak | Prog Manager | NSLS-II |
| ERIK JOHNSON | Dep. Comp. | NSLS-II |
| Chris Stebbins | Project Engineer | NSLS-II |
| Ben Ocko | scientist | NSLS-II |
| Andrew Ackerman | ESH | S+(S) |
| Steve MOSS | NSLS-II ABM | NSLS-II / RCD |
| Steve Hulbert | NSLS-II | Interim Beamline Engineering GL |
| Daniel Bacescu | NSLS-II | Photon Division - Engineering |
| Zhijian Yin | NSLS-II | Controls |
| Lonny Berman | Construction/PM Group | NSLS-II |
| | | |
| | | |
| | | |
| | | |
| | | |
| | | |
| | | |
| | | |
| | | |

# NSLS II J-PLS
## (Jumpstart-Processing and Liquids Scattering)
# Preliminary Design Review

Executive Session

Erik Johnson – Deputy for Construction

February 12, 2018

70 YEARS OF DISCOVERY
A CENTURY OF SERVICE

U.S. DEPARTMENT OF ENERGY
BROOKHAVEN NATIONAL LABORATORY

# J-PLS PDR Notes -

- Formality of the review - Not DOE 413.3 *but .. We take it seriously*…
- J-PLS Baseline Approval Document outlines parameters
- The objectives for this review are to assess
  - the preliminary design of the J-PLS instrument, as well as
  - the proposed schedule and cost estimates for its completion.
  - The feedback from the review panel will be used to evaluate the readiness to proceed with the acquisition of the major components of this instrument and development of the final design.
- It should be noted that some of the components that will be used in this instrument are being repurposed from earlier instruments used at the APS and NSLS.
  - I would welcome the thoughts of the committee with respect to the feasibility of this approach as it relates to the charge elements.
- Please provide your final report by February 26th, 2018.

# J-PLS PDR Charge -

- Does the preliminary design support the J-PLS scientific objectives?
- Is the preliminary design mature enough to proceed to the final stage of engineering design development?
- Has readiness to proceed with the acquisition of the major mechanical components been demonstrated?
- Have the costs and schedule been developed with sufficient detail to establish the project baseline?
- Does the design present technical risks? Does the design present scientific risks?
- Are there safety concerns related to the installation and operations of J-PLS?
- Does the design offer affordances for future upgrade paths such as (1) secondary focusing with CRLs, (2) a double crystal deflector, and (3) a canted undulator and new photon delivery system?

# Agenda -

| | | |
|---|---|---|
| 8:30 – 9:00 | Panel Executive Session Review | Panel |
| 9:00 – 10:15 | Introduction | |
| | Complex Scattering Program/JPLS Overview | Ron Pindak |
| | SMI Beamline Performance and Status | Mikhail Zhernenkov |
| | Scientific Overview and Strategy/ES&H | Ben Ocko |
| 10:15 – 10:30 | Break | All |
| 10:30 – 11:15 | Engineering & Design | Daniel Bacescu |
| 11:15 – 11:30 | Controls & EPS | Zhijian Yin (ZY) |
| 11:30 – 11:45 | Cost & Schedule | Chris Stebbins |
| 11:45 – 12:15 | Beamline Tour | All |
| 12:15 – 13:00 | Lunch and Q&A | Reviewers & Presenters |
| 13:00 – 14:00 | Panel Discussion | Panel |
| 14:00 – 14:30 | Close out | All |

# Thank You !

# Complex Scattering Program

*Ron Pindak, Brookhaven National Laboratory, NSLS-II*

*JPLS PDR Review, February 12, 2018*

# Complex Scattering Program

Comprised of 4 operational beamlines providing X-ray small and wide angle, resonant, coherent, and inelastic scattering. The beamlines were selected to advance our understanding of structure and dynamics of soft/bio/hard-material architectures with enhanced or emergent properties that drive transformative technologies and impact problems of national importance in **energy, security, health**.

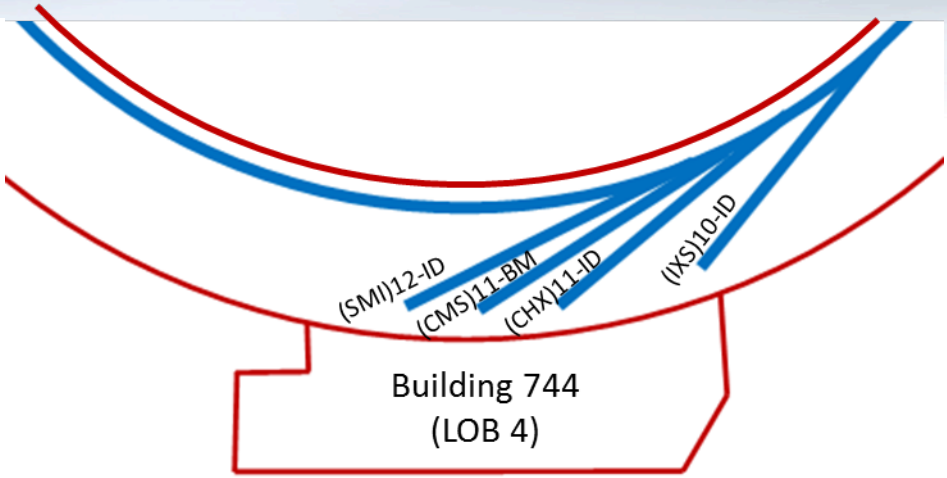


J-PLS project → SMI beamline → CS Program

## Outline

- Pindak: Scientific vision of the CS Program, introduce the existing CS program beamline capabilities (including the SMI SAXS/WAXS endstation), and our long and short-term objectives to support processing and liquids research
- Zhernenkov: SMI beamline optics
- Ocko: J-PLS project

# Complex Scattering Program

## Our goal is to achieve a balance of fundamental and applied research

**Fundamental Research**

- Buried interface structures (CMS, SMI)
- Spatially resolved fluctuation dynamics (CHX)
- Non-equilibrium kinetics during processing or in driven systems (CHX, SMI)
- Smart exploration of engineered composites (CMS)
- THz phonon dispersion (IXS)

**Applied Research**

- Materials under extreme conditions
- Responsive materials (electric, optical, chemical, or environmental changes)
- Flexible electronics processed roll-to-roll
- Energy (battery, fuel cells, photovoltaics) and health (water purification) applications
- 'Green' cleaning formulations
- High strength/weight materials – automotive and aeronautical
- Hybrid architectures 3d printed using functional nanocomposite inks: conductive (circuits) or biocompatible (artificial skin)
- Coatings (radar invisible, immune to bio-fouling, low friction)
- Water filtration (improved reverse osmosis membrane materials)

# CHX: Coherent Hard X-Ray Scattering (11-ID)

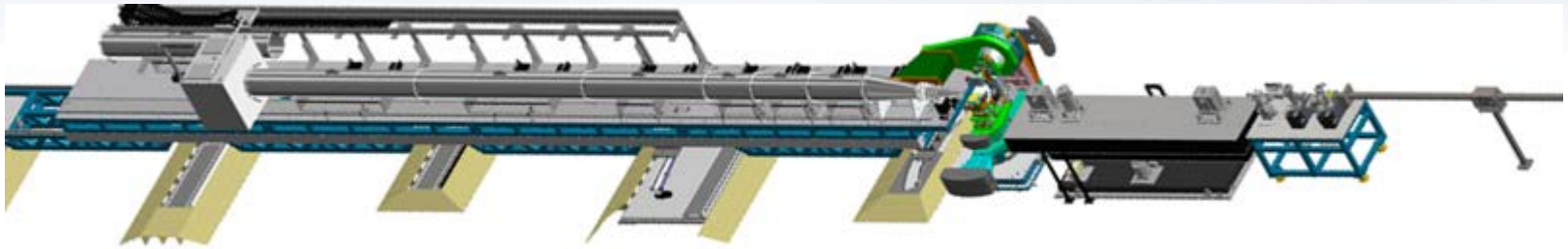

- Utilizing the high brightness of the NSLS-II source, coherent scattering techniques as XPCS can be done ~100x faster than at other facilities in the energy range of 6-16 keV.
- Large format area detectors provide few to sub-millisecond time resolution; include an Eiger 500k 9KHz (SAXS), Eiger 4M 750Hz (SAXS), Eiger 1M 3KHz (WAXS)
- Articulated optical tables and a multi-axis goniometer provide a wide q-range (Angstroms to microns) and simultaneous SAXS/WAXS
- Beam size ~10 um (SAXS) and ~1 um (WAXS)
- Features make CHX equally well suited for soft and hard matter systems.

# IXS: Inelastic X-ray Scattering Beamline (10-ID)

- Designed to achieve best-in-class performance for THz vibrational dynamics:
  - Angular dispersive crystal optics for cutting-edge resolution (**~ 2 meV**) with **sharper tails** in resolution function and high Q resolution (**~0.1 nm$^{-1}$**) and a focused beam **<10μm**.
  - Medium operation energy (**9.1 keV**) capitalizing on NSLS-II's strengths in flux and brightness

## Comparison with ESRF

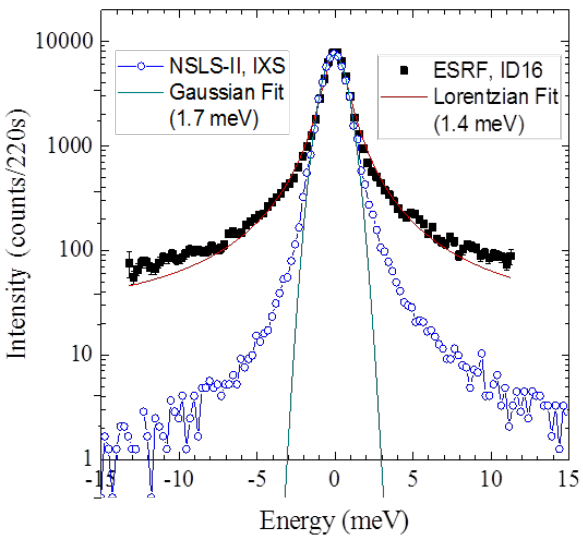


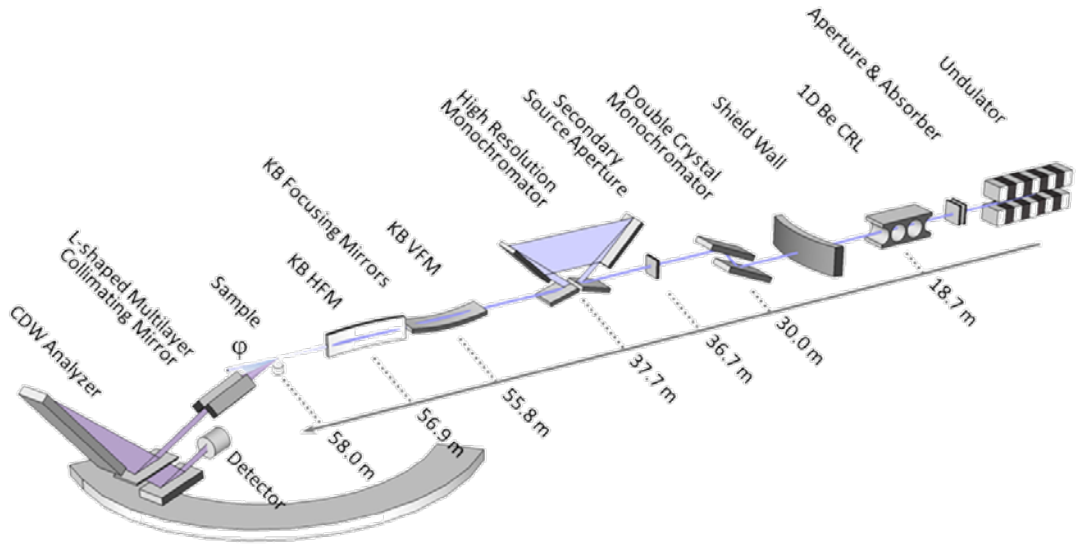


- Disordered and low-Z materials
- Phononics of nanoparticle self-assemblies, systems with engineered heterogeneities, and biomaterials
- Systems under high pressure using diamond anvil cells due to the high flux density
- Phonon localization in thin films and superlattices for thermal management

# CMS: Complex Materials Scattering (11-BM)

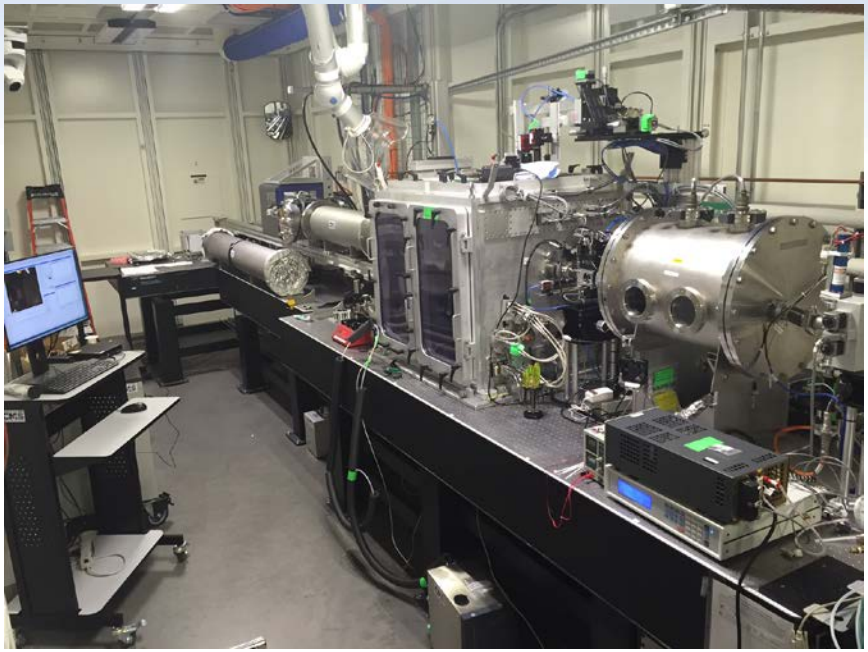

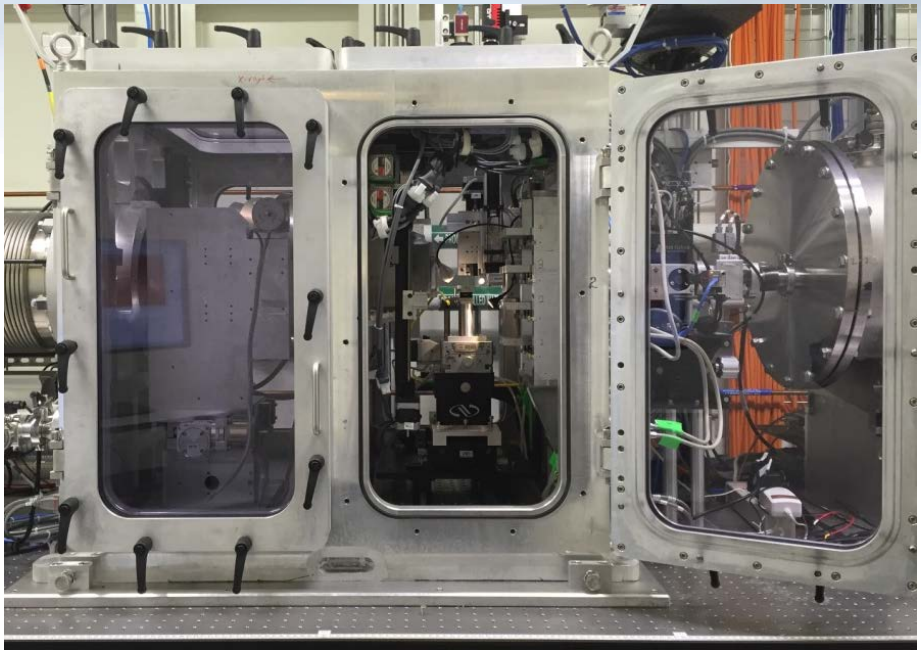

- 3 Pole Wiggler Source
- Achieves a flux of $10^{10}$ - $10^{13}$ ph/sec by using a double multilayer monochromator with a ~1% bandwidth and energy range of 10-17 KeV.
- Beam size = 200μm H x 100μm V for routine operations, tunable to 50μm H x 25μm V
- Large format area detectors include a Pilatus 2M (SAXS) and a Photon Sciences CCD (WAXS)
- CMS is being optimized for high-throughput simultaneous SAXS/WAXS for intelligent exploration of the expansive parameter spaces inherent to advanced materials

# Examples of sample setups used by users

Beamline-developed/commercial/user-developed

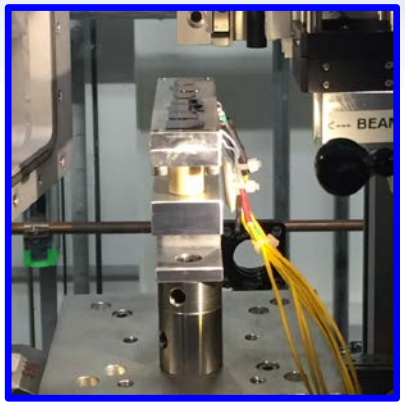

Ex-situ & in-situ T-annealing thin-film bar

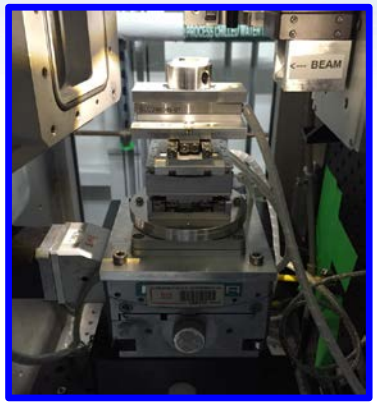

Sample rotation/mapping (CD-SAXS, GISAXS tomo)

Linkam hot stage (HFSX350) & tensile stage (TST350); Instec hot stage (HCS 402)

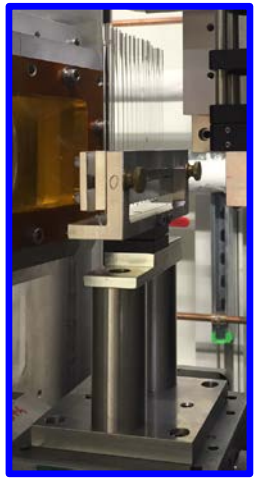
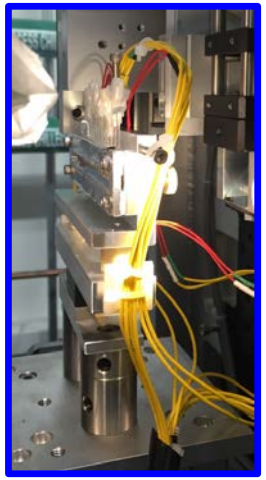

Ex-situ & in-situ T-annealing capillary holder

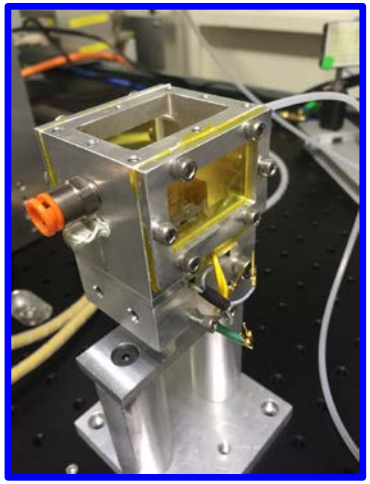

Solvent annealing cell for polymer thin films

Electro-spray deposition cell for block copolymers [Osuji group, Yale U.]

# SMI: Soft Matter Interfaces (12-ID)

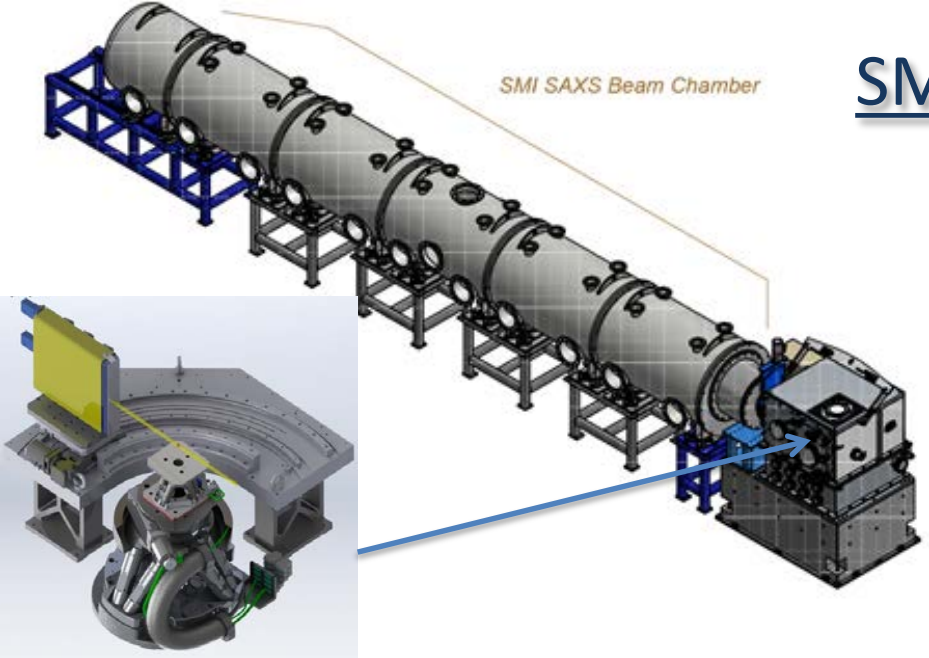


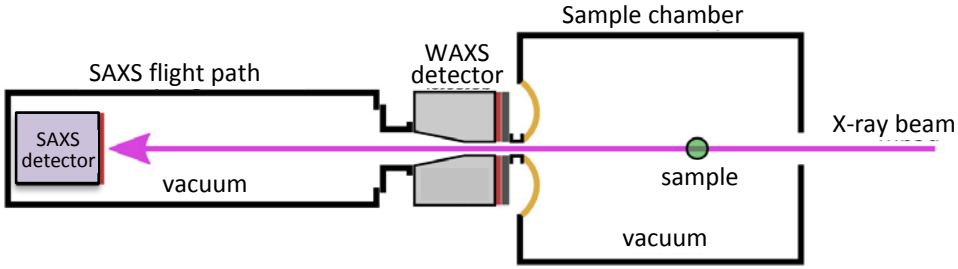


**Complements CMS with additional capabilities – user projects matched to beamline**

- **Full suite of 3 detectors** : an in-vacuum Pilatus 1M (SAXS) and an in-vacuum Pilatus 300K-W (WAXS), enable **time-resolved SAXS/WAXS/GISAXS/GIWAXS studies at 500 Hz**; an in-air CFN detector with a vacuum through-hole adds the simultaneous collection of a **360° azimuthal WAXS scattering cone.**
- Broad energy range (2.1-24 keV) enables resonant scattering at S, K, P, Cl, and Ca edges
- Provides a variable beam focus from a *low divergence beam* of 26µm V ×215µm H to a *micro-focused beam* of 2.5 µm V x 25µm H for the exploration of heterogeneous materials.
- **Bounce down mirror for liquid surface scattering in the tender x-ray range *not available elsewhere*** except the SOLEIL SIRIUS beamline.
- **Canted ready design enables the build-out of an independent beamline**

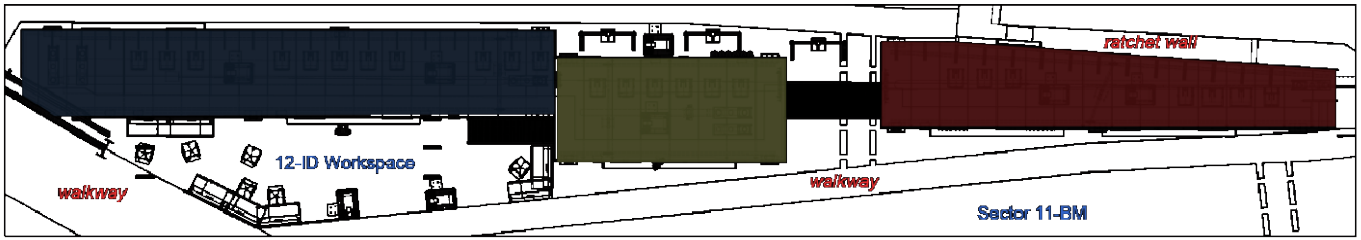

# SMI: Complementary Capabilities

## ISS open platform spectroscopy endstation (shown with ALD chamber)

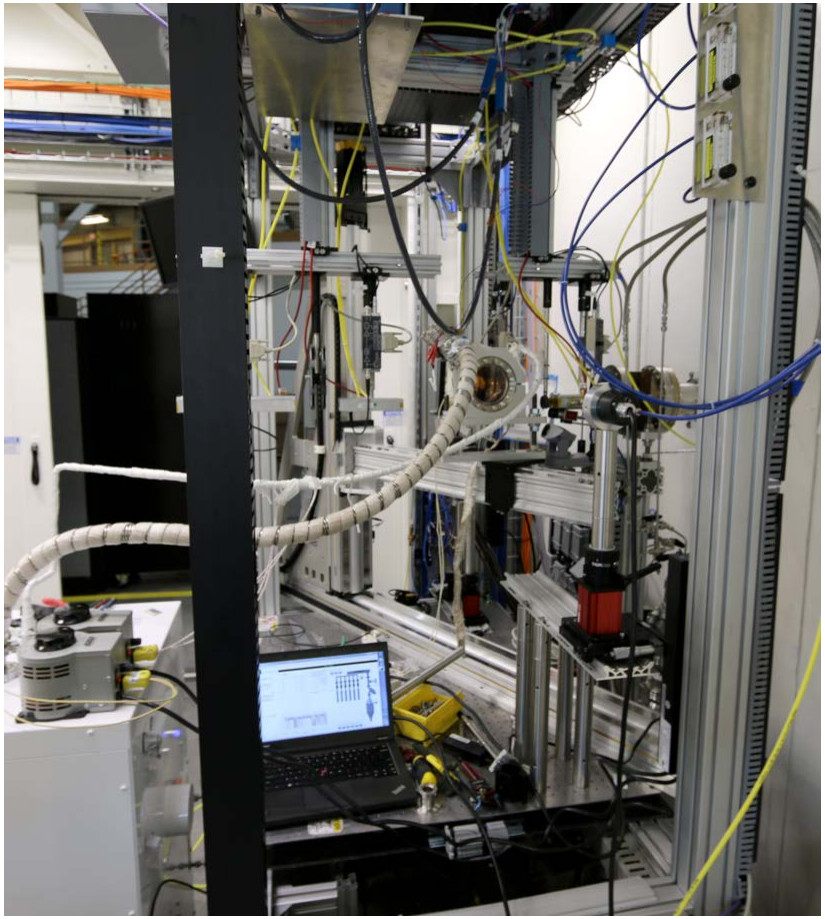

## NIST P-RSoXS capability

### Extends resonant scattering to soft X-ray edges

The scattering chamber has various elements:-

a) Sample Manipulation
b) Support for alternative sample holder
c) Load Lock
d) Beam Stops
e) Detector Supports

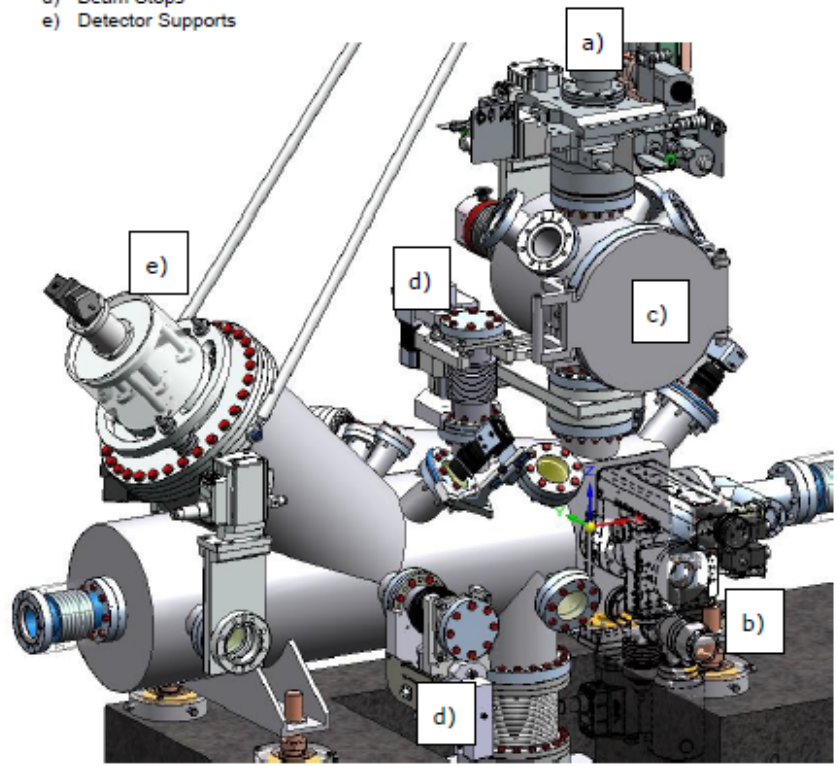


Location: NIST's NSLS-II Beamline SST-1
Source: 150 eV – 2000 eV EPU, C-N-O-F K-edges
RSoXS design led by Dr. Eliot Gann, NIST

# Objectives

**Long-Term:**

Build-out the PLS Beamline: a stand-alone canted-ID Beamline, incorporated in the design of SMI and recently expanded in concept to accommodate both the processing and liquids research communities.

**Short-Term:**

*Taking into account a constrained operations budget*, begin engaging the processing and liquids scattering communities by constructing a *jump-start* PLS endstation (J-PLS) in the existing upstream hutch at SMI. The J-PLS instrument will share beam with the downstream SMI SAXS/WAXS endstation and incorporate:

- Open design for high versatility
- Uses existing hardware from previous APS and NSLS instruments
- Fits into existing hutch with minimal modifications
- Keeps Single Crystal Deflector design of previous instruments
- *capable of upgrade to Double Crystal Deflector*
- Efficient switch-over from liquids to processing configuration
- Optimized for high energies (~20keV)

# Soft Matter Interfaces (SMI) Beamline

Mikhail Zhernenkov

# Introduction

## BEAMLINE CHARACTERISTICS

**TECHNIQUES:**

- Grazing-Incidence SAXS/WAXS
- Liquid Reflectivity and Diffraction
- Tender X-ray Scattering

**ENDSTATION DETAILS:**

- GI-SAXS/WAXS station: 2.1-24 keV, microbeam and low divergence modes, in-vacuum Pilatus detectors
- Liquids station: 25µm spot, 8-24 keV, single/double crystal deflector

**SMI at NSLS-II:**

- Structure and assembly in Soft Matter: crucial knowledge for Energy and Environment
- Variable *q* range, beam properties, and sample geometries to measure from nanoscale to mesoscale
- Resonance from P, S, K, Ca: discover new structure-function relationships

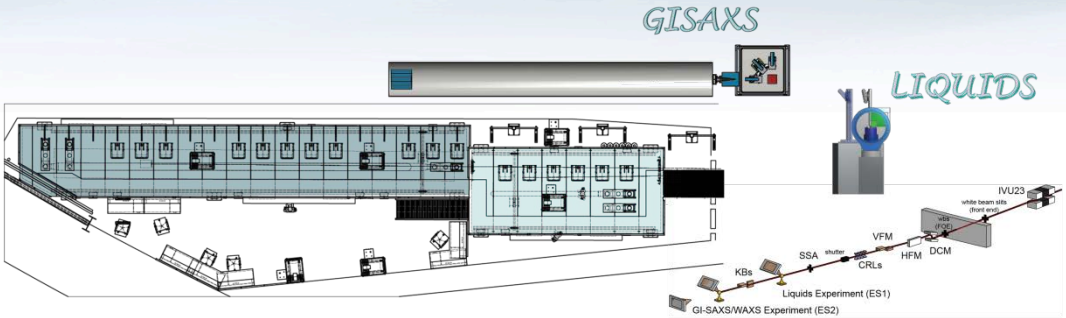


Two end-stations in-line with canted undulator beam source GISAXS/WAXS and Liquids experiments. The design enables future upgrade to fully canted build-out with two independent energy-tunable end-stations. Inboard branch shown.

## SCIENTIFIC APPLICATIONS

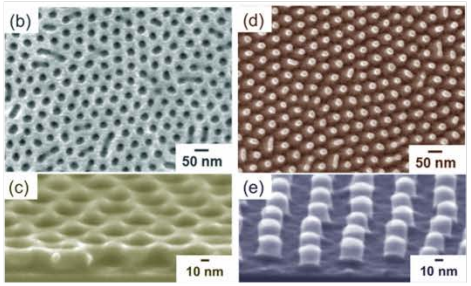


Molecular templates (above), liquids and wetting, hierarchical biomaterials

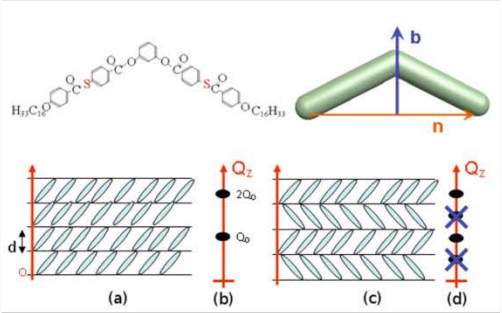


Grazing-incidence small- and wide-angle x-ray scattering: mechanical composites, biomaterials, and responsive phases (above)

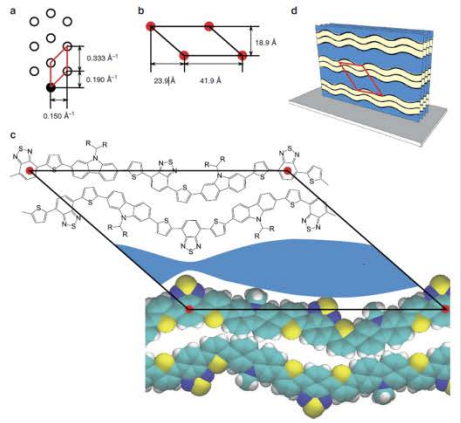

Liquid crystals, molecular electronics, and photo-responsive organic films (above)

# Undulator source and parameters

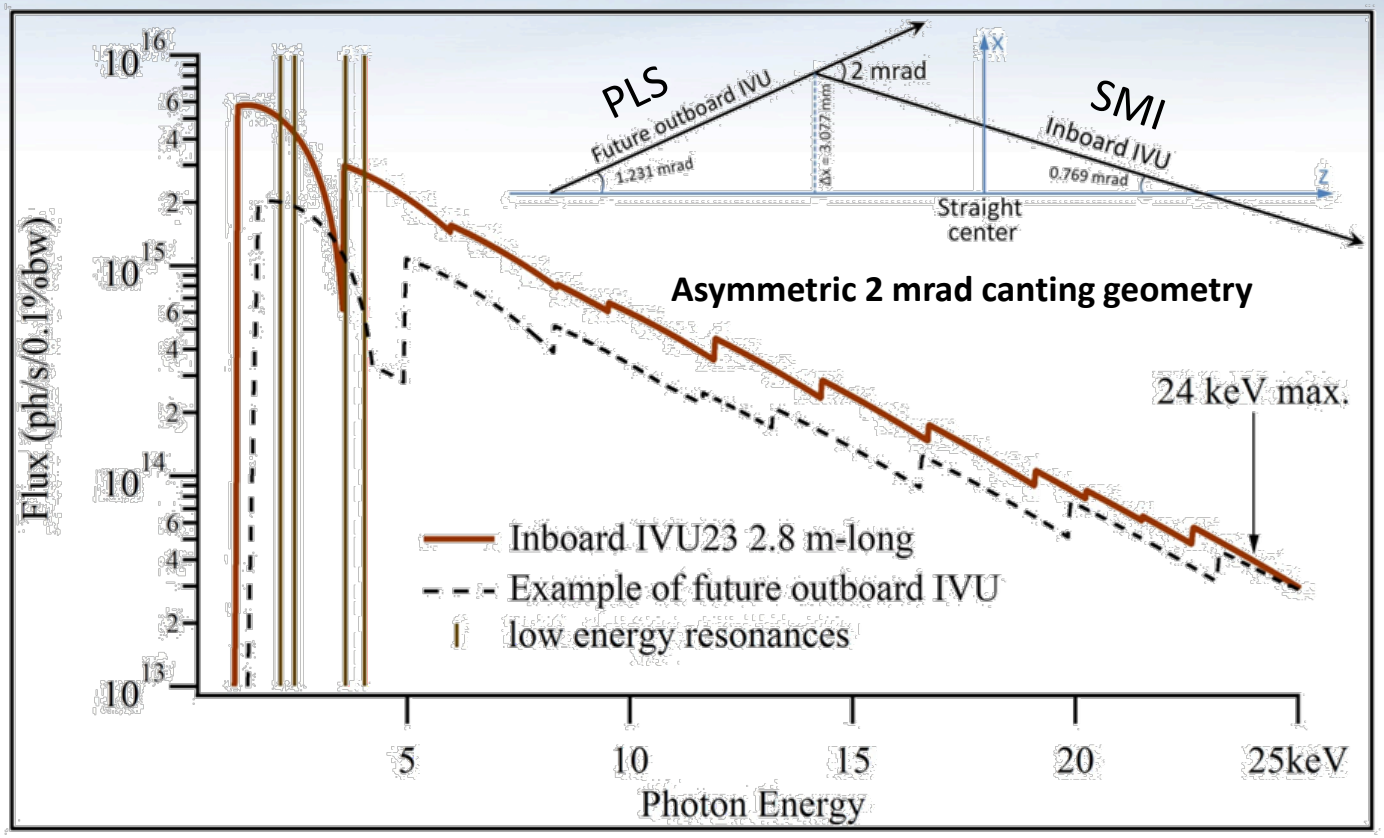


**Key Parameters of IVU23**:
2.8 m-long; 23 mm period;
$K_{max}$ = 2.05 (@0.955 T and 5.9 mm gap)
Located 0.6 m downstream of straight center

| | Effective source size, rms | | |
|---|---|---|---|
| | 2101 eV | 10778 eV | 20358 eV |
| h | 137 µm | 137 µm | 137 µm |
| v | 7.1 µm | 5.8 µm | 5.6 µm |
| h' | 12 µrad | 8 µrad | 7.4 µrad |
| v' | 10.3 µrad | 4.9 µrad | 3.7 µrad |

# SMI layout and optical scheme

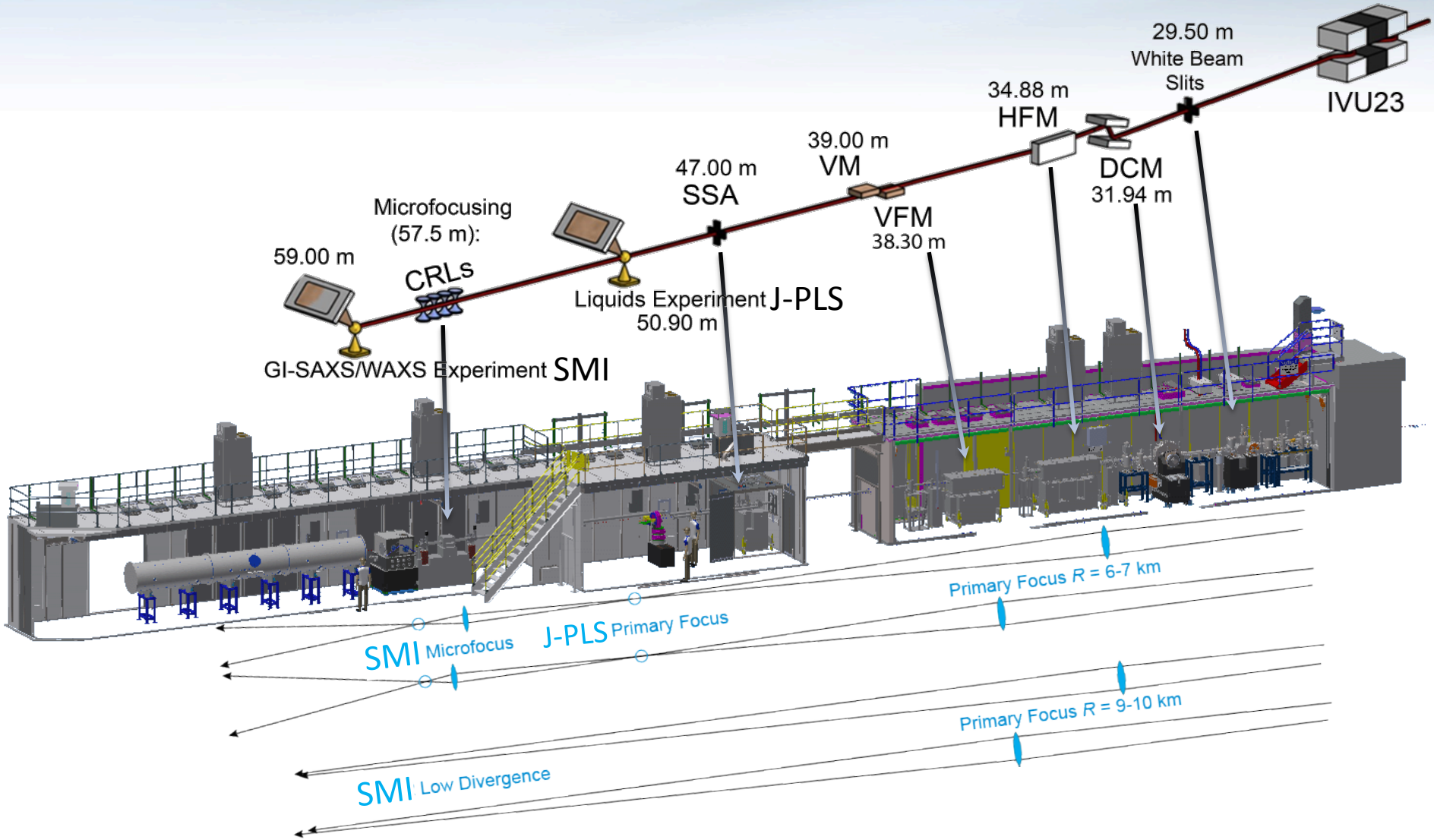

# SMI beamline modelling: SRW

- ✓ actual measured SMI mirrors' profiles
- ✓ FEA heat load on 1st DCM crystal

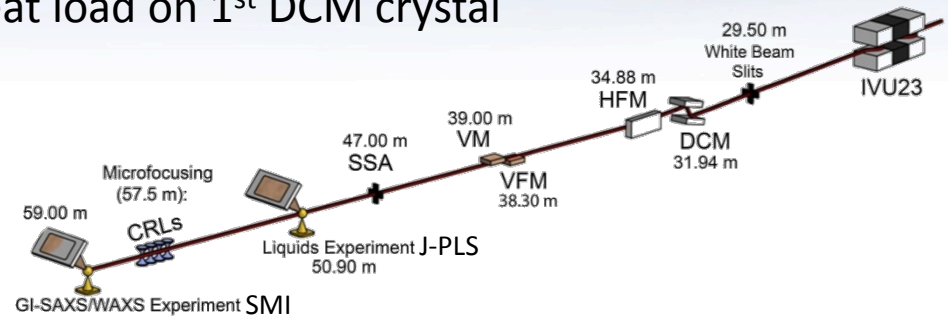


20.4 keV, 19th harmonic IVU gap = 6.2 mm
(FWHM beam size shown)

## J-PLS focus

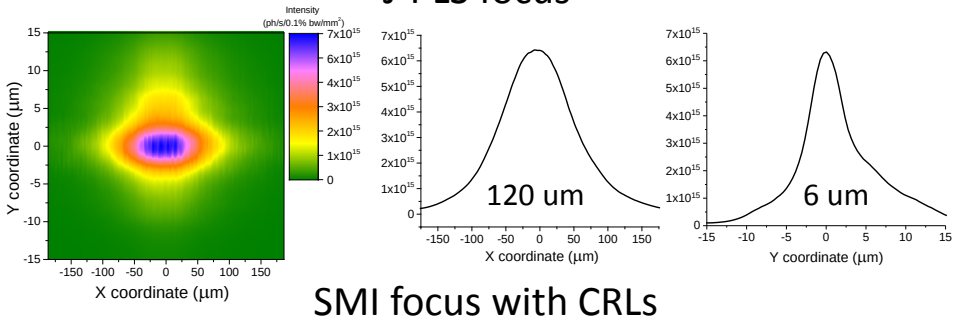


## SMI focus with CRLs

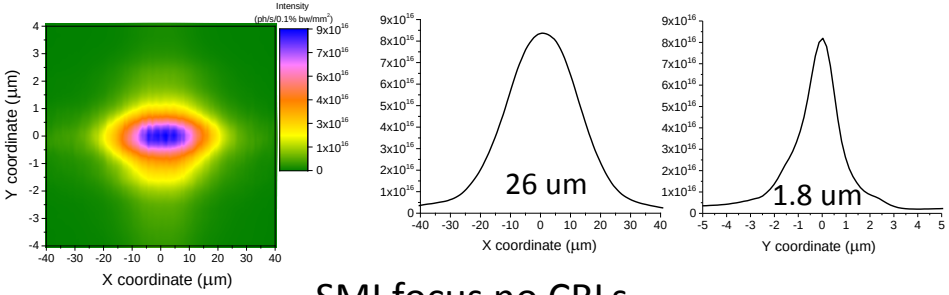


## SMI focus no CRLs

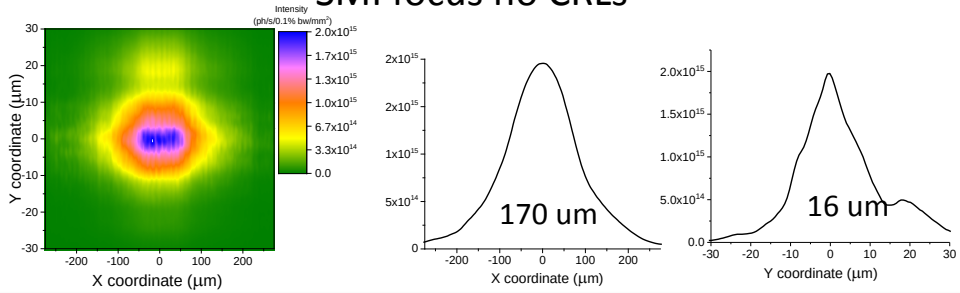


2.1 keV, IVU gap = 10 mm

## SMI focus no CRLs

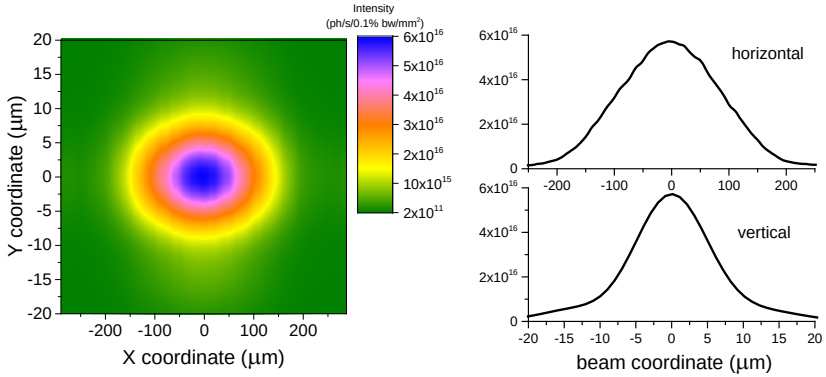

# SMI beamline performance: 16.1 keV

Low divergence SMI (at 59 m)

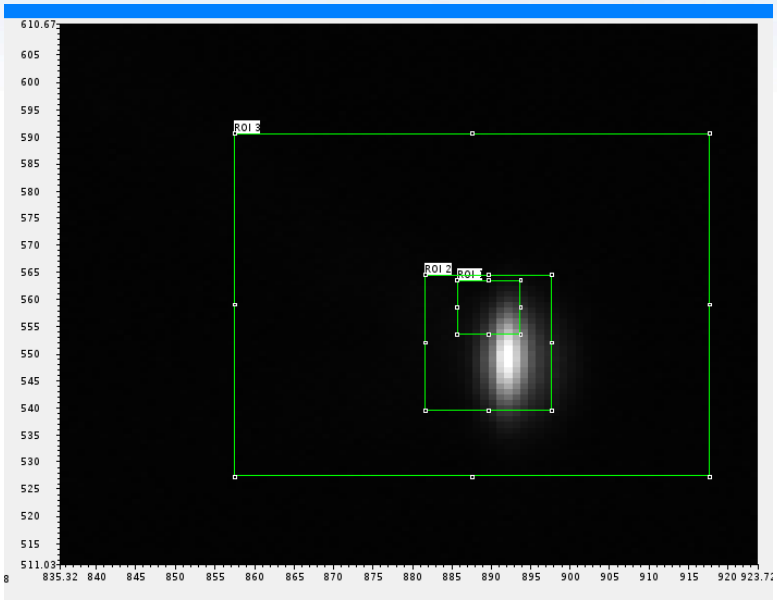


microfocusing SMI (at 59 m)

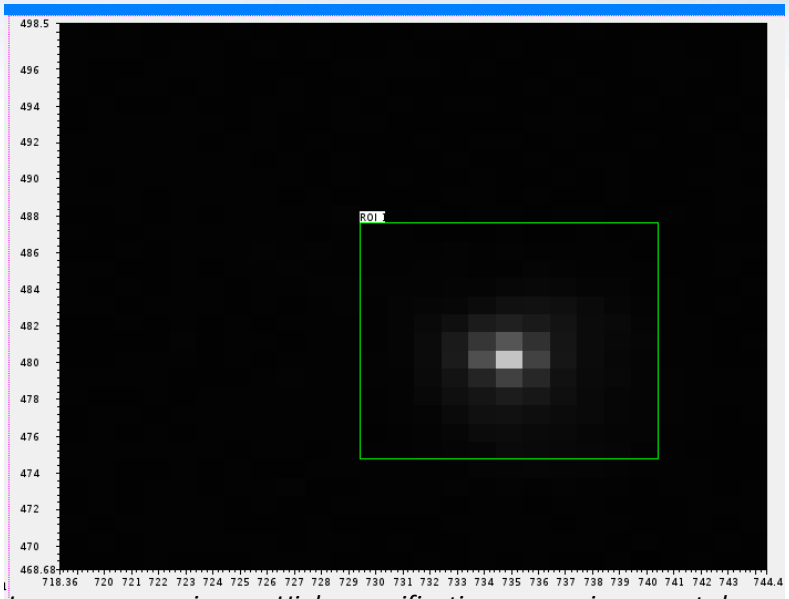


*Low res camera image. High magnification camera image not shown*

Beam sizes (HxV) at SMI:
Low divergence mode 200x30 um (without bimorph mirrors fine-tuning and feedback)
Microfocusing 25x3 um

**Intensity (at 350 mA)**:
At 16.1 keV (IVU gap = 6.21 mm, 15$^{th}$ harm): 2.34 uA current on XBPM after mirrors → 2.4e13 ph/s (confirmed with Pilatus 1s count of attenuated beam scaled by the filter absorption factor)
At 22 keV (IVU gap = 6.56 mm, 19$^{th}$ harm)→ 5.5e12 ph/s

# SMI beam stability: long term drift and vibrations

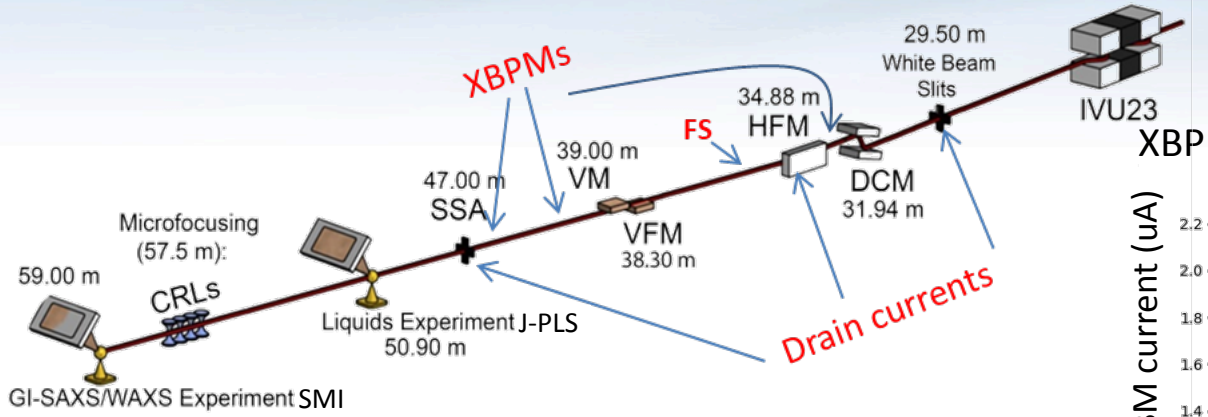


XBPM2 beam drift after shutter open

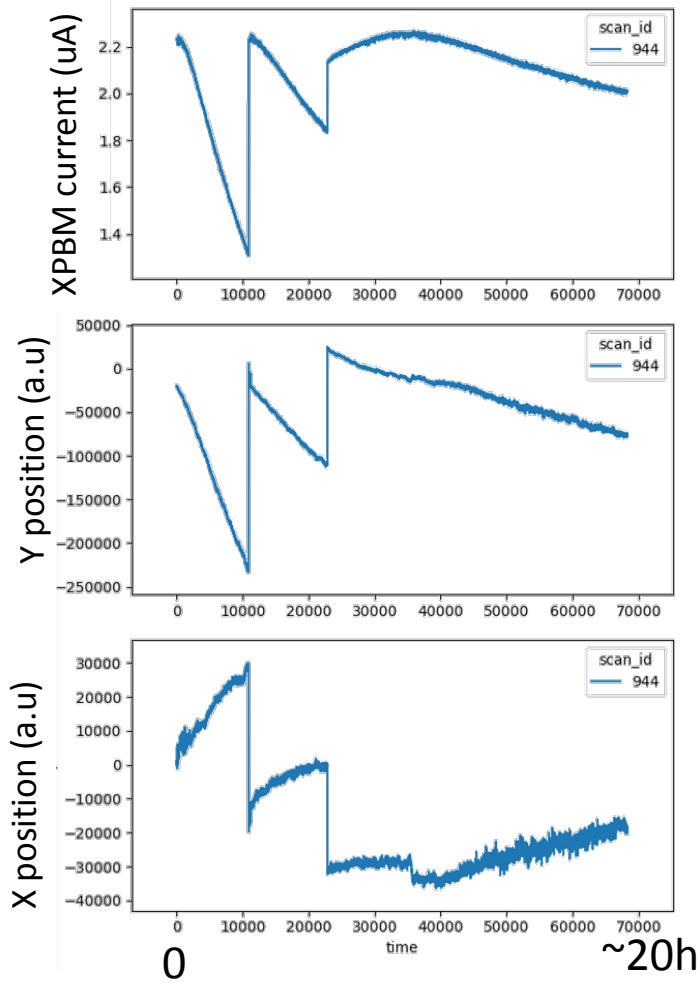


## Drift assessment without feedback @16.1 keV

Large thermal drift during first several hours after shutter is open:

- Due to the thermal equilibration of the 2nd DCM crystal
- Vertical and horizontal drifts are correlated with intensity
- H drift is small: less than ¼ of the beam size
- V drift is large and has to be compensated with a feedback

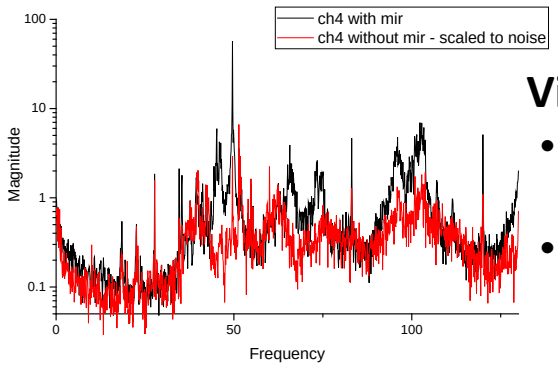


## Vibrations without feedback

- Visible vertical vibration under 33 Hz: 40 um peak-to-valley
- High frequency (<250 Hz) beam "widening": 10-20 um

# SMI outlook

**To be done during 2018-1 and 2018-2 cycles (Feb-Aug 2018):**

- Implementation of the intensity feedback on the DCM using HFM drain current
- Implementation of the vertical beam position feedback using XBPM3 and piezo drive on the Vertical Deflecting Mirror (VM)
- Fine-tuning of the bimorph mirrors for the best focusing conditions
- Full beam characterization at 24 keV (intensity, beam size) at higher (19$^{th}$) and lower (15$^{th}$) harmonic number
- IVU precise tuning to improve high harmonics intensity

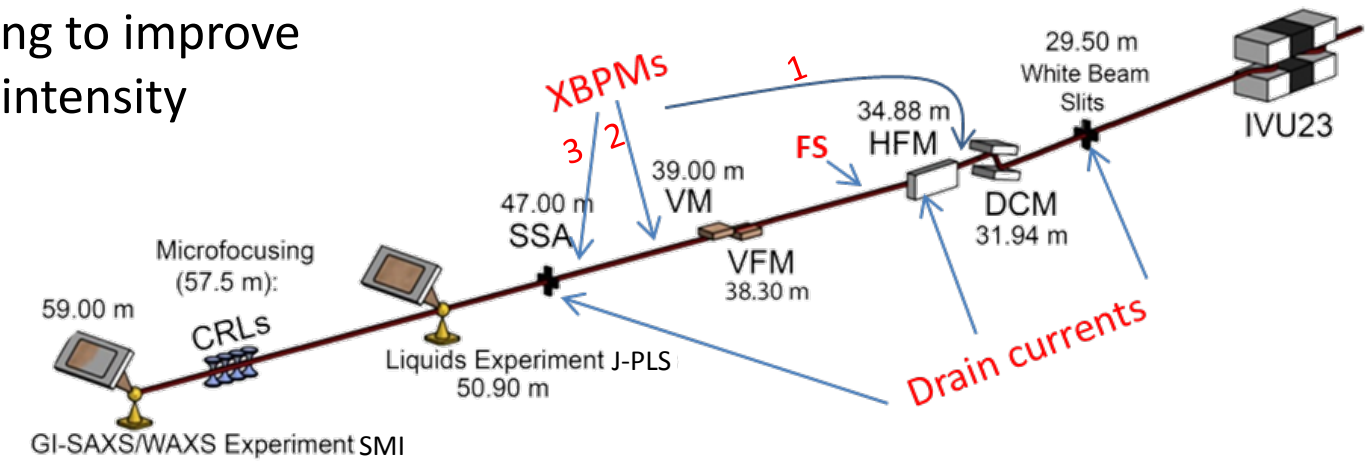

# Jumpstart Processing and Liquid Surfaces (J-PLS) Beamline

## Preliminary Design Review

*Ben Ocko, BNL*

*12 February, 2018*

# Outline

1. Background
2. Science
    1. Polymer Processing
    2. Liquid Surfaces
3. Functional Design Requirements
4. Key Findings/Responses from the Conceptual Design Report
5. Safety Considerations
6. Recycled Components

# J-PLS Team

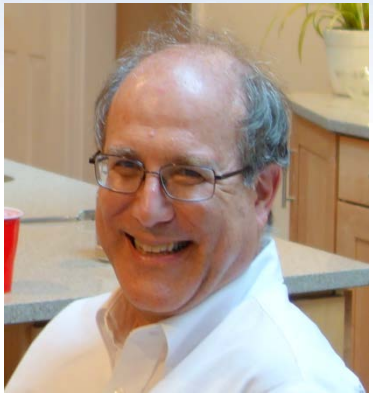

Ben Ocko
Scientist

Mark Schlossman
Scientific Consultant

Chris Stebbins

Lonny Berman
Project Management

Daniel Bacescu
Mechanical Engineer

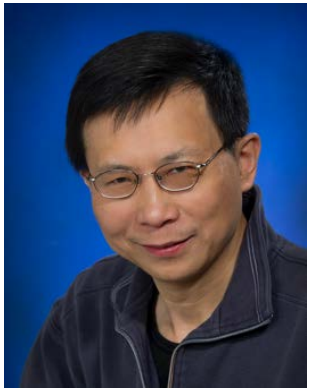

Zhijian Yin (ZY)
Controls Engineer

Steve Hulbert
Mechanical Engineering
Group Leader (interim)

Ron Pindak
Complex Scattering
Group Leader

Additional Advisors/Contributors: Masa Fukuto, Lutz Wiegart, Lin Yang, Mikhail Zhernenkov, Chris Soles, Karsten Bruening, Bridget Murphy, Ivan Kuzmenko, Mike Toney, Andrei Fluerasu, & Chinedum Osuji

# Historical

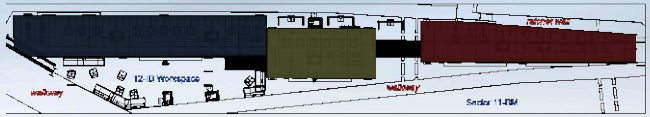

**Liquid surface science with x-rays pioneered at NSLS/X22B (30 years)**

**1. SMI Project (shared beamline): Liquid surfaces always a part of SMI vision.** SMI originally budgeted for a new Double Crystal Deflector, using much existing X22B hardware. SMI approved in 2011, liquid surface aspects curtailed in 2015 after very high DCD bid, specifications difficult to achieve. **Significant infrastructure added during Project.**

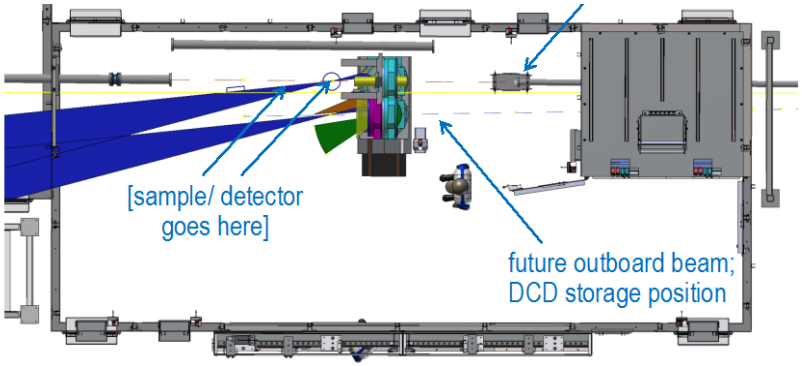


2. **PLS independent/canted: Expanded to include processing**. Detailed plans, calculations, budgeting for beamline and end station. New components, independent beamline. Well received by community in 2016. Cost ~$9M to complete, end station alone is about >$1M. **Canted beamline is still part of the long term NSLS II vision.**

3. **Equipment from shuttered beamlines will be used to construct a new and improved instrument that will be suitable for a canted, independent SMI/PLS**.

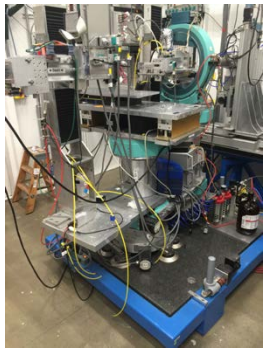

ANL/APS/CMC (9ID) Liquid Spectrometer 1999-2015

BNL/NSLS/X22B Liquid Spectrometer, 1985-2015

**J-PLS (Jump Start PLS): Design objective is the same instrument for processing and liquids using existing SMI beam transport optics. Utilizes $1M SMI investment and reuses components.**

# Perspective: Other liquid spectrometers

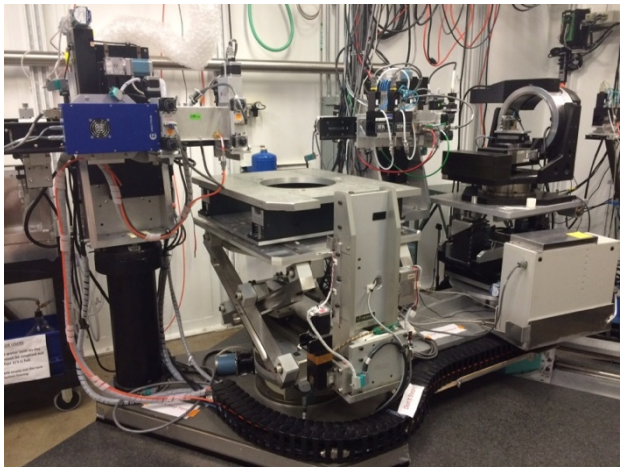

The liquid surface spectrometer at the **ChemMatCARS Sector 15** of the Advanced Photon Sources**. Only US operational instrument.**

**During APS upgrade J-PLS essential to keep a US liquid surface x-ray program ongoing**

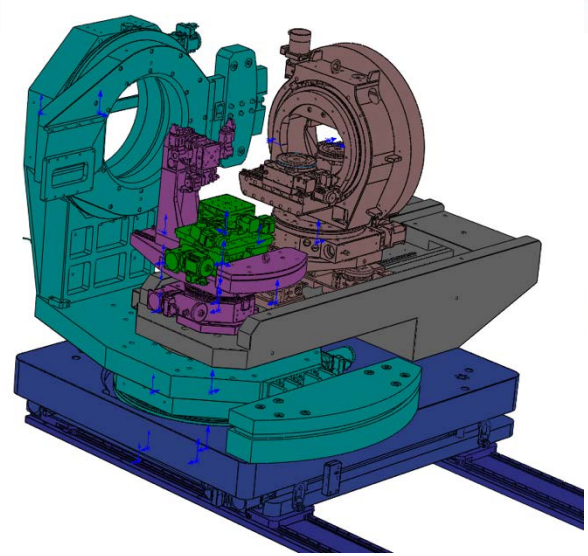

ID10 @ ESRF: Double Crystal Deflector (50% availability), 2014

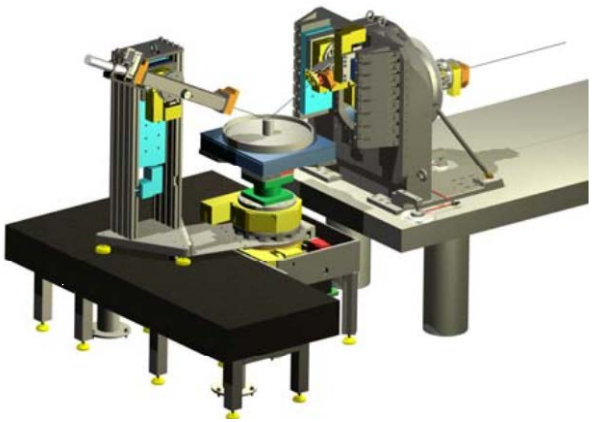

Petra III: LISA Double Crystal Deflector (~33%) ~2009

Modern liquid surface spectrometer have mostly adopted a Double Crystal Deflector (DCD) so as to keep the sample stationary. Data rates maybe up to 10 times faster at smaller q with DCD due to the elimination of “waiting times”. SCD faster at larger q due to increased flux. SCD better for GID.

# Science

# Polymer Processing

Polymer processing modifies mechanical, structural, and electronic properties.
Operando structural studies essential to understand the relevant processing mechanisms.
Often Involves solvent evaporation, melting and stretching.

## Examples of Polymer Processing

Spin coating

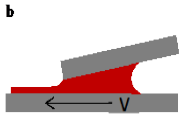


Blade coating

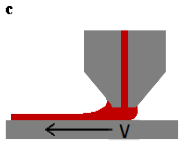


Slot-die-coating

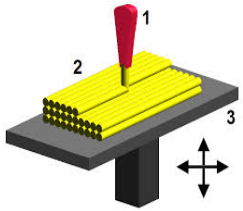

Additive Manufacturing, i.e.
Fused Deposition Molding (FDM)

## Other Examples

- Fatigue testing
- Nanoimprint
- Gravure (engraving)
- Laser ablation
- Blow molding
- Fiber spinning
- Interfacial polymerization processes

Roadblocks to progress in polymer processing, and the opportunities for transformational advances in this field are well aligned with the DOE Grand Challenges:

1. *How do remarkable properties of matter emerge from complex correlations of the atomic or electronic constituents and how can we control these properties?*
2. *How do we characterize and control matter away - especially very far away - from equilibrium?*

# Processing challenges for Printed Electronics

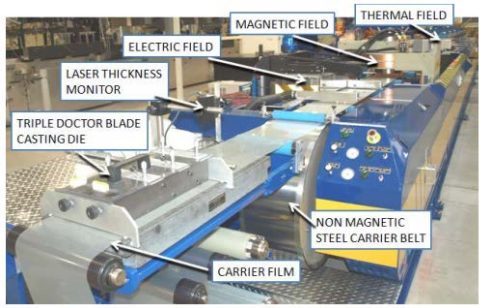


Example of roll-to-roll processing line at Akron (*Cakmak)*

Low temperature processing almost invariably means structures are path dependent, meta-stable/non-equilibrium, multiple polymorphs.

Optimal film morphology may not be the equilibrium structure

*particularly true for Organic Photovoltaic Devices and Organic Electronics*

Provide scientific understanding so as to 'dial-in' optimal structure

blend composition, loading, solvent, additive, temperature, …

Inform & validate multi-scale physics based simulations of the structural evolution.

Process optimization is purely empirical: process 'rules' are non-existent

J-PLS will investigate underlying science.

**Processing chamber requirements:**

1. Need to use multiple fields (UV, magnetic, electric)
2. Correlate x-ray results with optical characterization methods

→ Both require reasonably large chambers

**Objective: Include many features/diagnostics of R2R on a beamline?**

Requires an open environment with a environmental cover to capture waste organics.

# Drying of cellulose nanocrystals

**Benefits from optical and microwave characterization combined with in-situ x-ray**

The dielectric constant was measured by **noncontact microwave cavity perturbation.** The dielectric constant of absorbed water was found to be significantly smaller than that for free liquid.

**Dielectric Characterization of Confined Water in Chiral Cellulose Nanocrystal Films**

Bharath Natarajan,[†,‡] Caglar Emiroglu,[†,‡] Jan Obrzut,[*,†] Douglas M. Fox,[§] Beatriz Pazmino,[†] Jack F. Douglas,[†] and Jeffrey W. Gilman[†]

# Proposed roll-to-roll processing

Johannes Schlipf et al, *J. Phys. Chem. Lett.*, 2015, *6* (7), pp 1265–1269

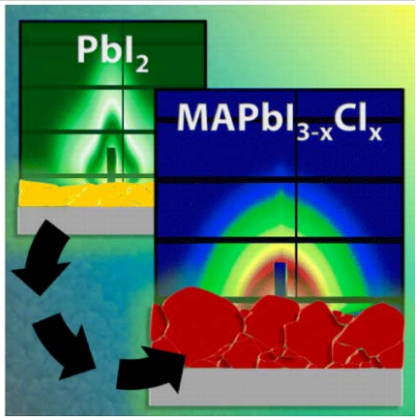


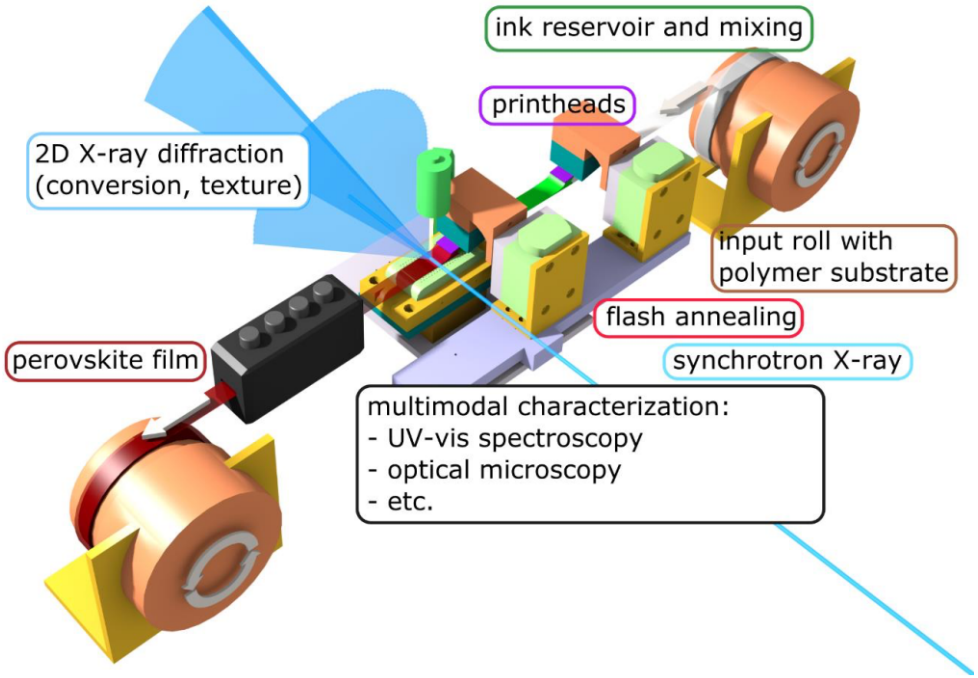


Fig. 1: Proposed in-situ roll-to-roll printing of perovskite thin films with multimodal characterization and real-time feedback for optimization of the composition and processing parameters.

Roll-to-roll processing concept for GISAXS and GIWAXS studies
*designed by Karsten Bruening (SLAC), Hongping Yan (Stanford) & Christopher J. Tassone (SLAC).*

# Overview: Liquid Surface/Interface Beamline

**X-ray Scattering is the leading technique for the study of structure at liquid surfaces and interfaces**

**Techniques for World-Leading Research:**

- High resolution scattering
  *X-ray reflectivity not available elsewhere at NSLS II for liquid surfaces*
- Element-specific studies
- Temporal resolution (sub-second to minutes)
- Optimized use of 2D detector

# Overview: Liquid Surface/Interface Science

## Overview of scientific scope

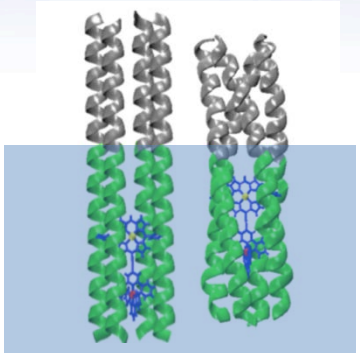

Directed Assembly for Functional Interfaces

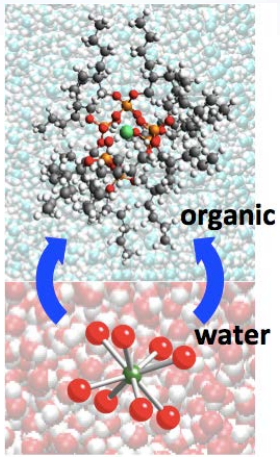


Ion Extraction for Environmental Remediation and Metal Production

Ionic Liquid Interfaces for Energy Applications

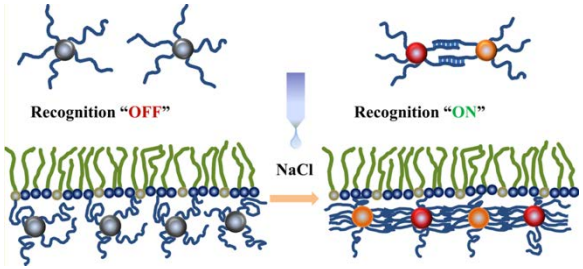


Nanoparticle Growth and Ordering for Nanotechnology

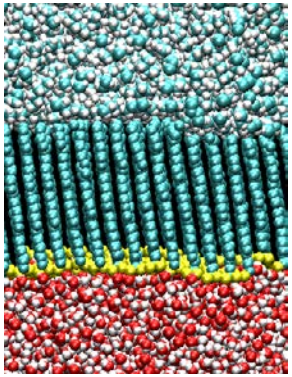

middle_fork.org

Interfacial Interactions for Coatings, Solders, Nano-layers

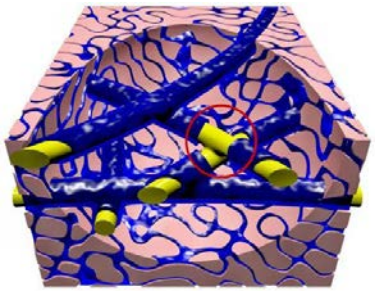

Desalination Technologies & Energy/Water Nexus

# Science Focus: Electrostatic Control of Interfacial Processes

## Electrified Interfaces

**Significance:**

- Voltage-tunable control of interfacial processes – nanoparticle ordering, membrane/protein interactions
- Many energy, complex fluid, and biomaterials processes controlled by electrostatics at interfaces

**Challenges:**

- Atomic level characterization of ion distributions at buried interfaces
- Heterogeneous, multi-component interfaces

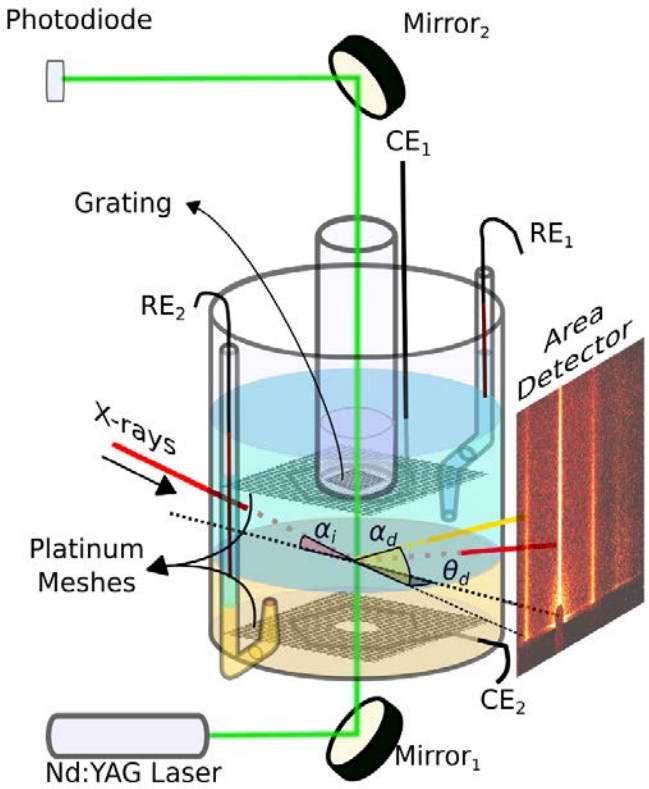


Nanoletters 14, 6816 (2014)

**Role of Liquid Interfaces:**

- Fluid platform for assembling and reacting soft matter under intense electric fields
- Interactions of voltage-controlled interfacial assembly with either aqueous or organic components in the subphases – opportunities for sensing, filtering, enhanced reactivity

# Science Focus: Directed Assembly for Tailored Functionality

## Nanoparticle Materials

### DOE Grand Challenges:

- "master energy and information on the nanoscale to create new technologies with capabilities rivaling those of living things"
- "perfect … synthesis of new forms of matter with tailored properties"

### Significance:

- Chem- and bio-inspired pathways to create nanoscale ordering for specific functionality (switches, amplifiers, charge transport, molecular recognition, materials synthesis)

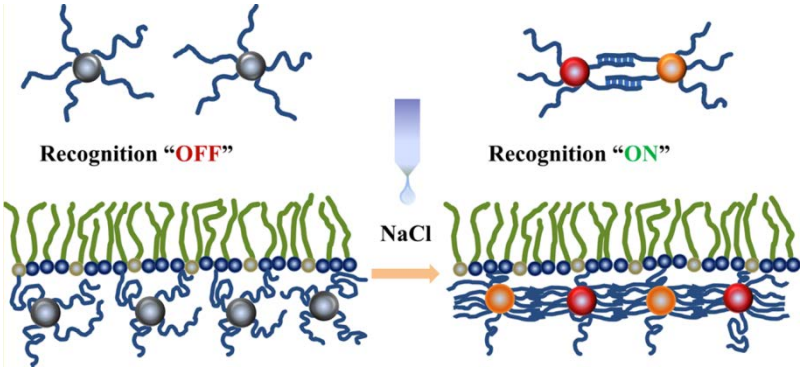


JACS 136, 8323 (2014)

DNA Programmable Assembly of Nanoparticles (Oleg Gang)

### Role of Liquid Interfaces:

- Dynamic platform for the assembly of nanoparticle materials
- Control of interfacial environment (pH, ionic content, temperature, viscosity, electric potential) and nearby molecular species that bind to or chemically interact with assembly

# Functional Design Requirements

# Functional Requirements

**Design motivated by many functional requirements & practical considerations.**
***hutch size, proximity to walls, beam characteristics, cost, ….***

**Objective: single instrument for processing and liquids.**

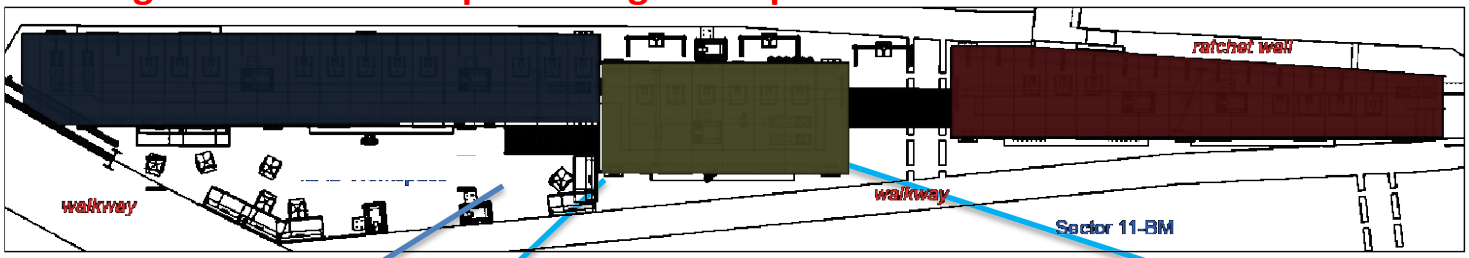

PLS Control Station

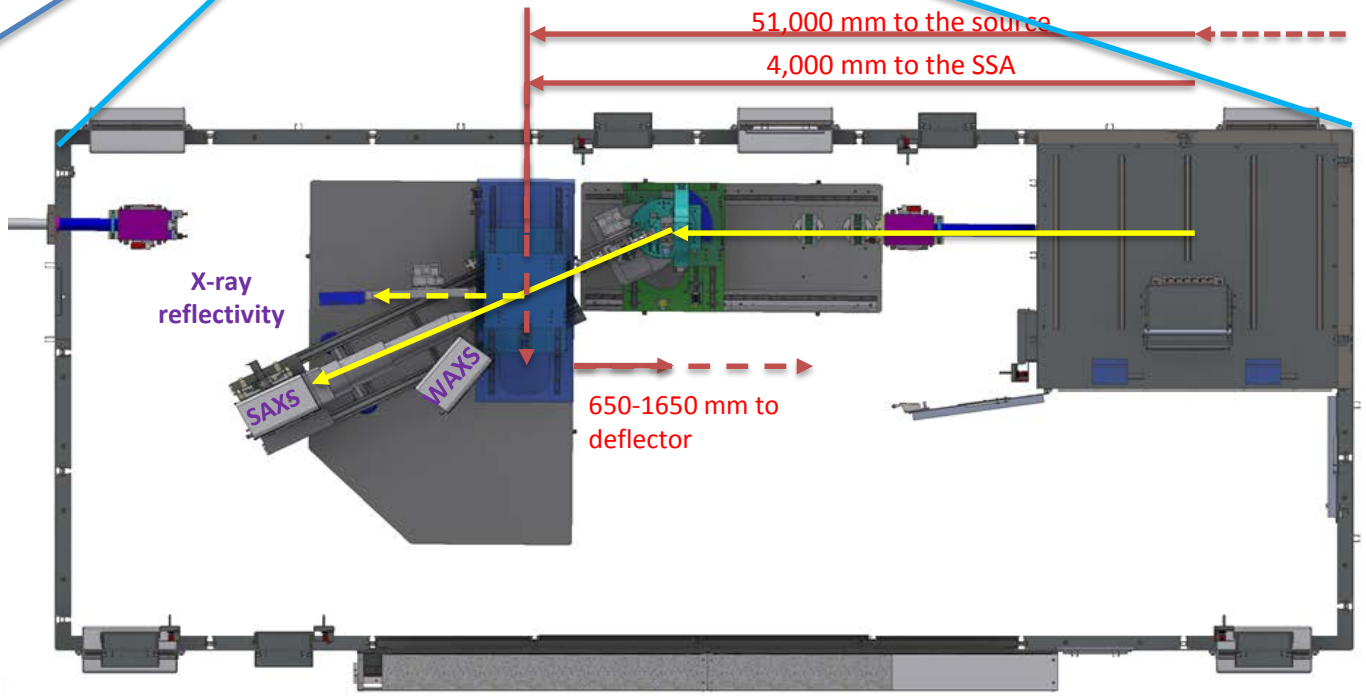

# 1. Deflector Resolution

**Beam must impinge in the center of a small sample at grazing angles.**
With vertical beams as small as 5 µm, incident beam and sample should have ~1 µm resolution. Accuracy over the entire range should be ~2 µm. Also depends on beam stability (not a subject here).

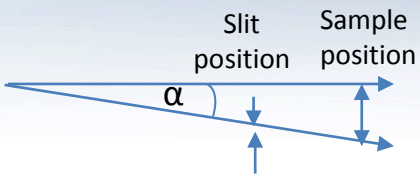


y – sample displacement
Δy – sample displacement error

**(1) Crystal deflector stage angular accuracy**:
Δy =2 µm corresponds to Δα=2e-6 rads at 1 m.
Corresponds to Δχ = 0.0005° (8 keV) and Δχ = 0.001 ° (16 keV)
Huber 512.1 χ expected accuracy is 0.008 ° over the entire range, off by an order of magnitude.
Requires validation over more limited range.
**Key finding:** Additional investigations required to find best solution. Possibilities include
***Positional feedback***
***Incremental encoder from Renishaw or lookup table***

**(2) Incident height/slit stage accuracy**. Relies on both incident height and incident rotation stages. Limitation is with the rotation stage if there is a long lever arm. Place slit close to center of rotation so that there is only sensitivity to the translation stage. Discussed further below

**(3) Sample stage:** Walking scans for a small liquid sample 3 µm steps show that the scattered signal moves in a well-define way as expected for a curved sample. Resolution is expected to be < 1 µm.

APS small liquid sample

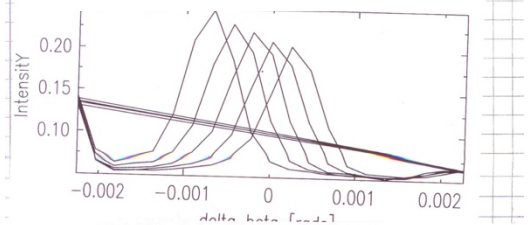

# 2: Reciprocal space range
## *Ge(111) deflector*

**Maximum range required for liquid metals, such as Gallium (high surface tension)**

For a fixed $Q_z$, the angular range depends on the energy.

Typical maximum range in $Q_z$ is 2.5 Å $^{-1.}$ ***(this is in user coordinates). Angle of incidence depends on the energy.

| energy (keV) | wavelength (Å) | α (degrees) | β (degrees) |
|---|---|---|---|
| | | 1.0 (inv. Å) | 2.5 (inv. Å) |
| 8.000 | 1.550 | 7.09 | 17.96 |
| 16.000 | 0.775 | 3.54 | 8.87 |
| 24.000 | 0.517 | 2.36 | 5.90 |

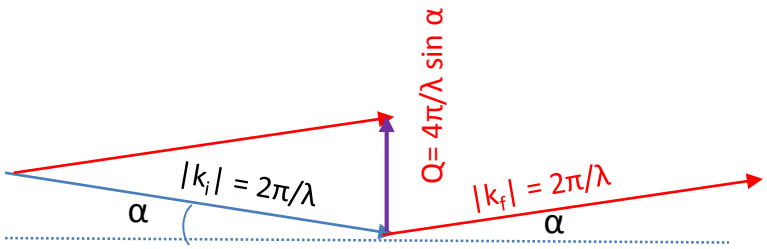


Not likely to require such large $Q_z$ at 8 kev.
For practical purposes, getting to $Q_z$ -2.5 Å $^{-1}$ at 16 keV is adequate.

Would be good to be able to achieve α =15∘, although 10∘ is probably adequate.

*** would be best to get to 3 Å $^{-1}$, achievable at all but the lowest E.

**Key finding: range of atomic layering is accessible**

# 3: SAXS arm arrangement

Preferred design: SAXS detector is on the sample two-theta arm.

**J-PLS 1.5m sample-to-detector (could be extended to 2 m)**

Previous design: SAXS detector farther back, difficult to build flight path.

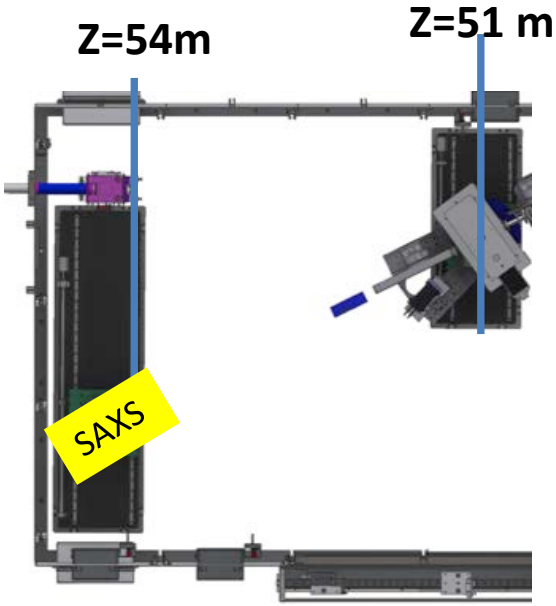


**CMS 5m sample-to-detector**
**SMI 8m sample-to-detector**

**Key Finding: A 1.5 m SAXS distance is preferred given the complications of previous design.**

# 4: Sample lateral motion

Short lever arm (650 mm)

Long lever arm (1650 mm)

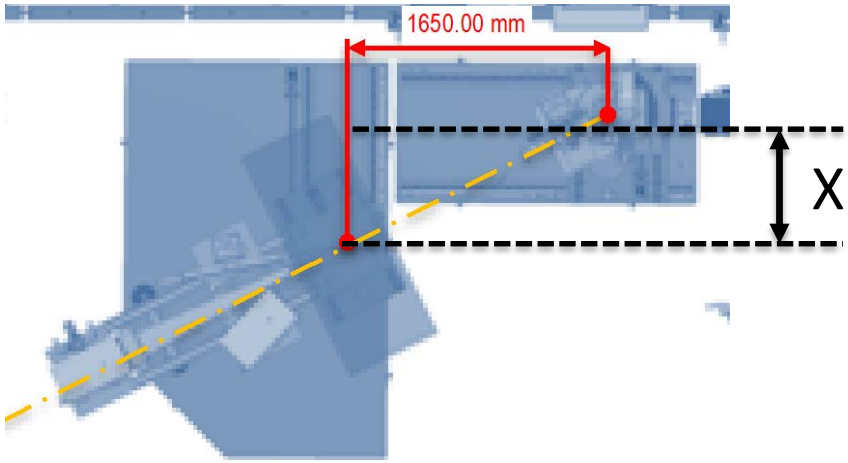


**Future (beyond scope): DCD,** deflector-to-sample distance of 650 mm translates to ~250 mm offset for DCD crystals, similar to ESRF design.

| | | **650 mm** | **1650 mm** |
|---|---|---|---|
| | **E** (keV) | X(mm) | X(mm) |
| Ge(111) | 24 | 104 | 264 |
| Ge(111) | 16 | 156 | 396 |
| Ge(111) | 8 | 338 | 858 |
| Ge(220) | 24 | 172 | 437 |
| Ge(220) | 16 | 266 | 675 |
| Ge(220) | 8 | 663 | *out-of range* |
| Max range | | 925 | 925 |

**Key Finding: sufficient room in the hutch for the required sample's horizontal motion.**

# 5: Detectors: configurations/resolution

*Soller slits, are they required to get the desired resolution?*

## How to get high in-plane resolution for GID?

2nd generation sources: GID, **large beam** on the sample

*Large parallex error:* ***solution*** *use Soller slits,* **Δ2θ=0.1˚**

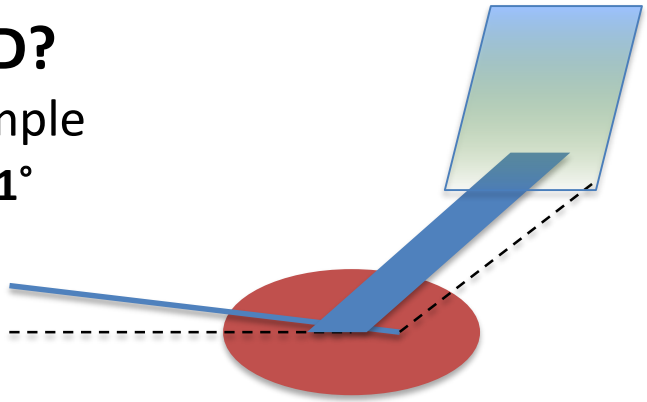

Two approaches to get similar angular resolution

1. Small vertical beam (0.05 mm) at $\alpha=2/3\ \alpha_c$ , **WAXS** detector at 500 mm, Δ2θ=0.22˚

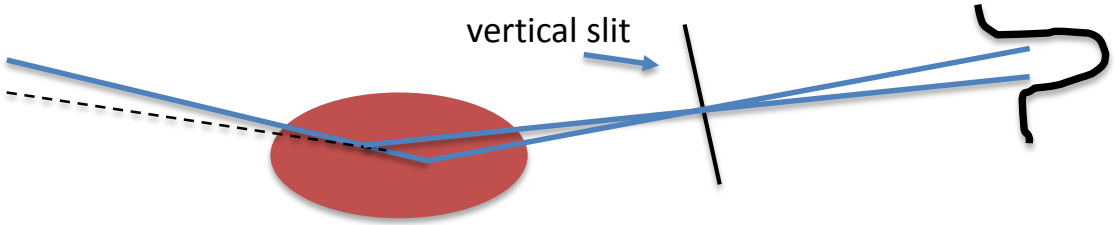


2. Better resolution can also be obtained by placing a vertical slit half-way between the **SAXS** detector and sample. Resolution depends on the slit width and distances. Correlation between position of scattering and scattered angle, limited angular range.

**Key finding: Two good options for obtaining GID from 2D monolayer films.**

# 5: Detectors configurations/resolution

Detector criteria: speed, pize size, overall size, energy range, cost.
energy range: CdTe, GaAs or thicker silicon?

Project includes WAXS, XR and XRF detectors

Project detectors

| | | S-D dist. | pixel size | | | | 16 kev | 16 kev | 8 kev | 8kev | | Speed |
|---|---|---|---|---|---|---|---|---|---|---|---|---|
| | type | D(mm) | d(mm) | δ2θ(°) | <pixels> | Δ2θ | δq (inv Å) | Δq (inv Å) | δq (inv Å) | Δq (inv Å) | pixels | Hz |
| REFLECTIVITY | Lambda 60 | 1000 | 0.055 | 0.003 | 256 | 0.8026 | 0.00046 | 0.12 | 0.0002 | 0.06 | 256x256 | 2000 |
| GID (WAXS) | Pilatus 1M | 500 | 0.172 | 0.020 | 1083 | 21.235 | 0.00288 | 3.10 | 0.00 | 1.55 | 981x1083 | 500 |
| GID (WAXS) | Eiger 1M | 500 | 0.075 | 0.009 | 1065 | 9.1058 | 0.00126 | 1.34 | 0.0006 | 0.67 | 1030x1065 | 3000 |

D/d = no. pixels
d( pixel size), D(sample-to-detector), pixels (no. of pixels)

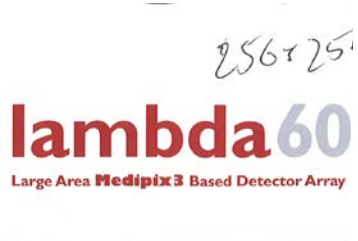


Lambda 60k

Dectris Pilatus 1M

X-ray fluorescence :
silicon drift detector,
Ketek or Vortex (mounted above the sample

**Key finding: XR and GID detectors specifications are excellent**
**No new SAXS detectors included in the project.**

# 5: Detectors configurations/resolution

## SAXS Detector Options

| | | S-D dist. | pixel size | | | | 16 kev | 16 kev | 8 kev | 8kev | | Speed |
|---|---|---|---|---|---|---|---|---|---|---|---|---|
| | type | D(mm) | d(mm) | δ2θ(°) | <pixels> | Δ2θ | δq (inv Å) | Δq (inv Å) | δq (inv Å) | Δq (inv Å) | pixels | Hz |
| SAXS | Eiger 1M | 1500 | 0.075 | 0.003 | 1065 | 3.0353 | 0.00042 | 0.45 | 0.0002 | 0.22 | 1030x1065 | 3000 |
| SAXS | Pilatus 1M | 1500 | 0.172 | 0.007 | 1083 | 7.0785 | 0.00096 | 1.04 | 0.0005 | 0.52 | 981x1083 | 500 |
| SAXS | Pilatus 100k | 1500 | 0.172 | 0.007 | 487 | 3.183 | 0.00096 | 0.47 | 0.0005 | 0.23 | 487x195 | 300 |
| SAXS | Princeton | 1500 | 0.06 | 0.002 | 2082 | 4.747 | 0.00034 | 0.70 | 0.0002 | 0.35 | 2082x2082 | 0.2-1 |

Options for SAXS detector (support, beam stop, & flights tubes large enough for a Pilatus 1 M)

1. Pilatus 100K and Princeton/Roper CCD are available 100% of the time at J-PLS.
   *100K is smaller than optimal and the CCD is slow (~1 sec)*
2. Eiger 1M is available through the equipment pool
3. Pilatus 1M could be moved from the J-PLS WAXS position
4. Purchasing a new SAXD detector might be possible through NSLS II or a PUP.
5. New detectors developments by industry; Eiger class will be announced soon, much larger pxiels
   *waiting has some advantages*

**Key finding: SAXS Princeton is slow, 100K is too small**

***Long term we need to find a better options for a SAXS detector***

# 7: Flight Path, BPM and Visualization

## *Incident flight paths located between deflector & sample*

Old Design:
Flight path is structural

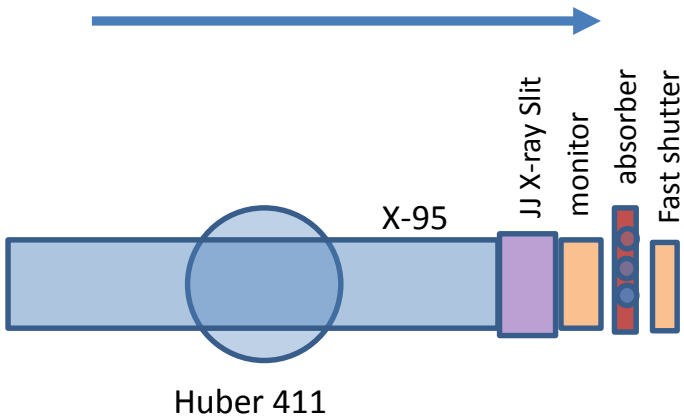


**Advantage:** Places slit closer to the sample
Disadvantages: Slit height sensitive to position and rotation angle. May affect tracking.

New design:
components mount on a rail

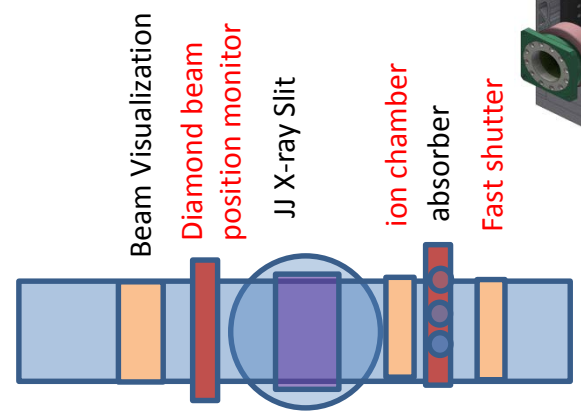


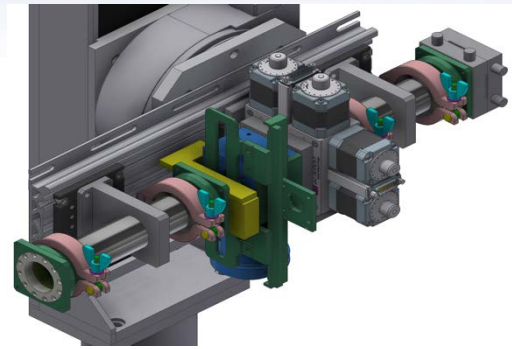

**Advantage:** (1) height less sensitive to the rotation angle, (2) easier to change the configuration
**Disadvantages:** (1) Slit is a bit farther from the sample, *ok due to the low divergence. (2)* May require two extra windows, *at higher energies flight paths are less important.*

Flexible design: may choose to move the slit closer to the sample for some experiments.
May use slit before the deflector to define beam and the slit after deflector as guard slit.

**Key finding: centered slit layout reduces sensitivity to angular error in the rotation stage.**

# 7: Flight Path Components

## *Beam Position Monitor (BPM) and small ion chamber*

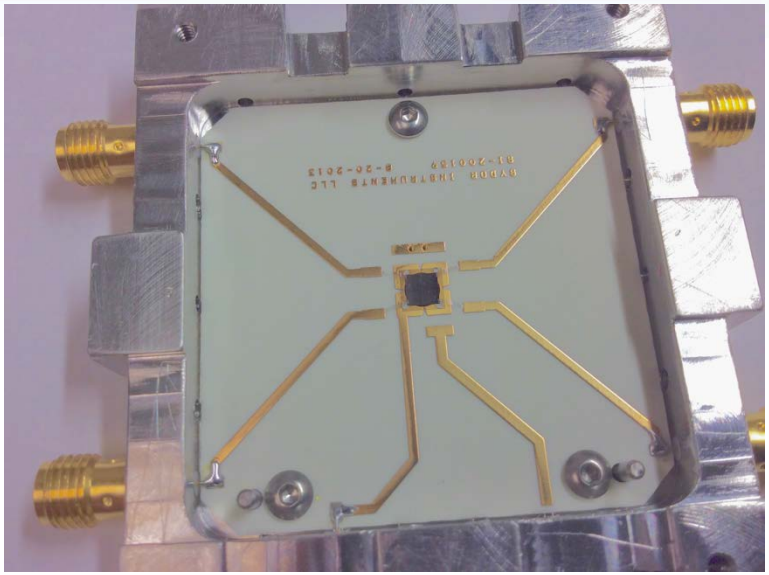

J. Smedley & P. Ilinski, XBPM & Feedback

Diamond Quad XBPM

40-um-thick single crystal CVD diamond

Quadrants - 40-nm-thick Pt electrodes

Vendor - Sydor

Compact Ion Chamber

ADC MC-205

# 8: Vibrations

Vibrations excite long wavelength "sloshing modes"

*important when there is viscous damping and for longer samples*

Best if no active vibration isolation required

*if active vibration is used mechanical stiffness is critical*

Long Island is a big liquid surface, vibrations travel far

*Waves, trucks, cars and trains.*

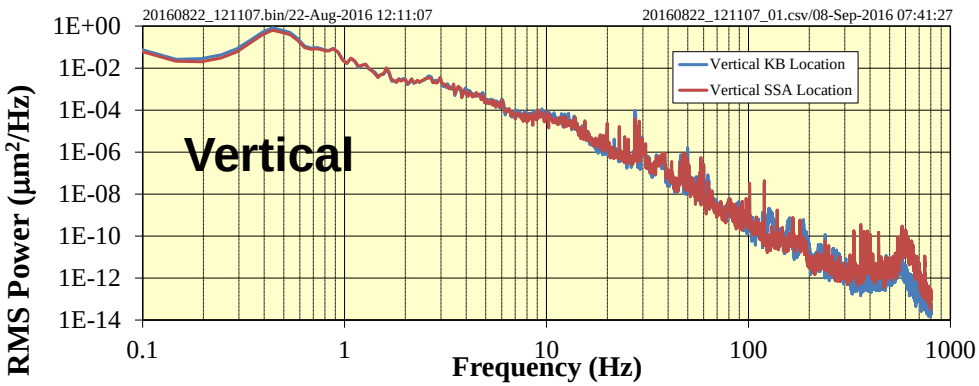


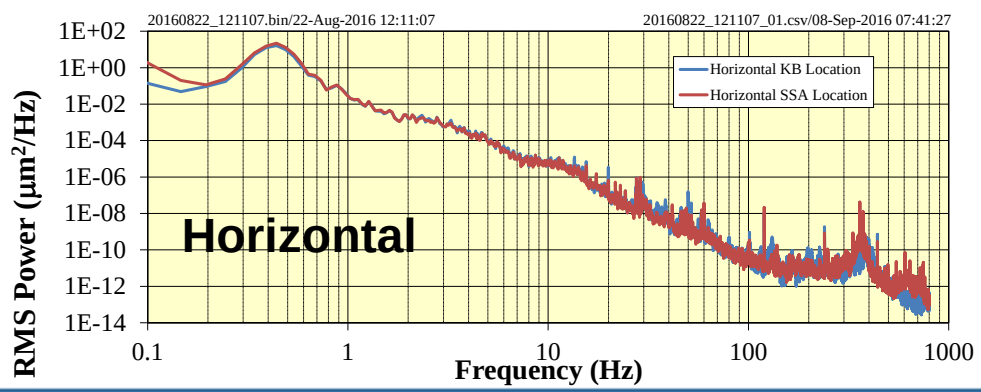


Truck traffic peak & vibration peak @ 9AM

Second vibration peak @ 3 pm

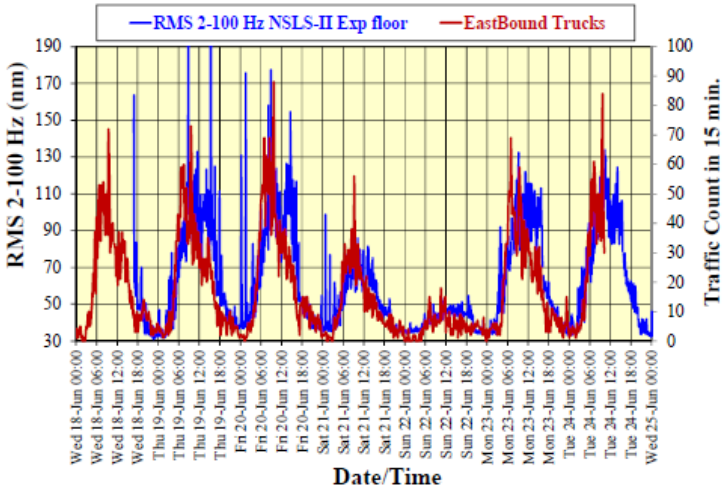


Horizontal noise is about 5 times worse than vertical. Vibrations are a factor of 5 worse than at Argonne.

# 8: Herzan AVI Specifications

## Modular & Scalable Active Vibration Isolation Platform

The AVI Series is a modular, low profile, active vibration isolation platform capable of sub-hertz isolation performance across all six degrees of freedom. The AVI Series is available in three standard sizes (AVI-200, AVI-400, and AVI-600) to accommodate instruments of all shapes and sizes (from 0 – 9,000 Kg), from compact AFMs to room scale TEMs.

**Vibration units previously used at APS & NSLS**

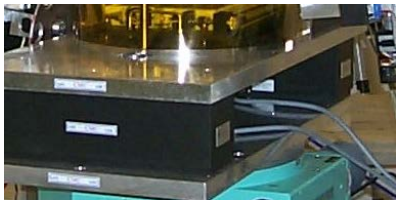

## Improvements at low frequency

### TRANSMISSIBILITY

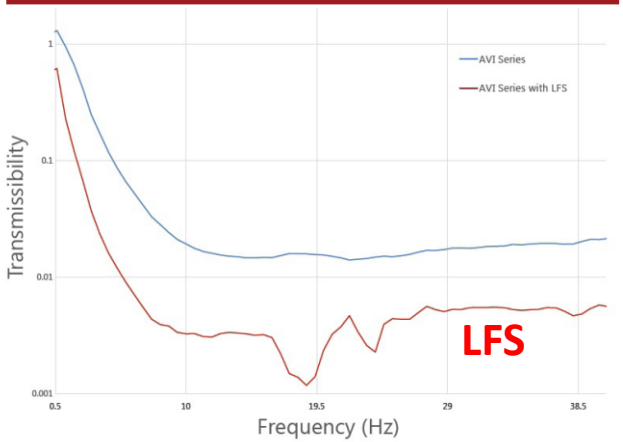


### PERFORMANCE

The LFS System enhances the low-frequency vibration isolation performance of the AVI Series, enabling the line of platforms to begin isolation at 0.5 Hz. To the left is a performance comparison graph depicting the standard performance of the AVI Series platforms and the AVI Series platforms with the LFS System.

*Performance Details*

- Enhances vibration isolation from 0.5 - 100 Hz
- 90% vibration attenuation at 2 Hz
- 99% vibration attenuation at 5 Hz and beyond
- Up to 50 dB of vibration reduction

**Viscoelastic film under granite might help.**

# 9: Sample cells, and weight loading

Large liquids chambers with vibration isolation

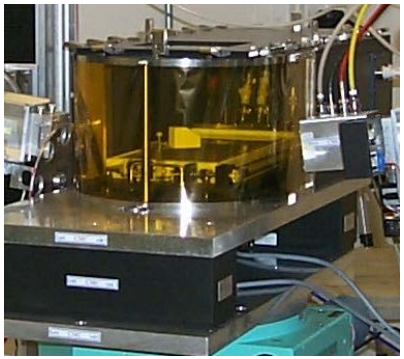

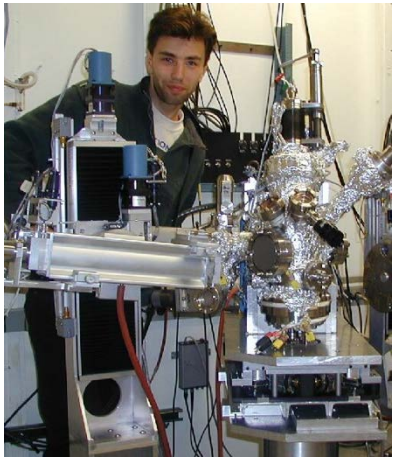

Small liquids chambers with vibration isolation

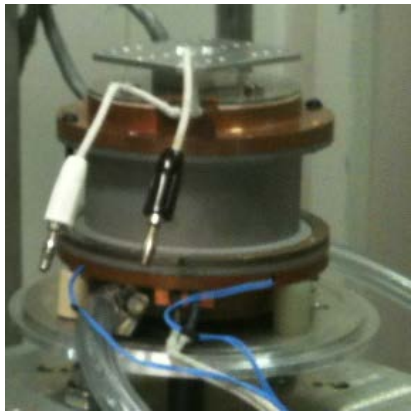

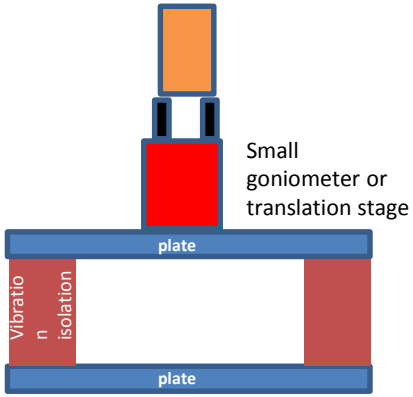


Large Processing chamber, no vibration isolation

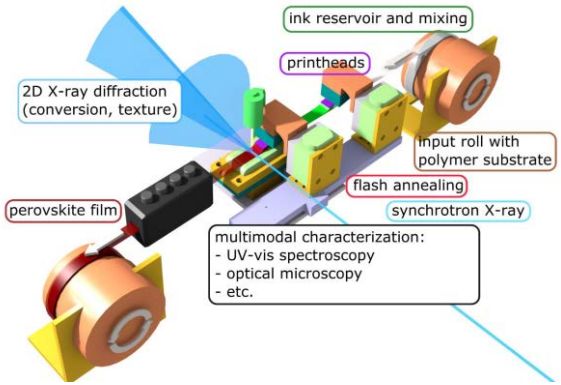


Would like to achieve 100-200 kg weight loading and chambers. Plate holding chamber can be as large as 60 by 150 cm.

**Key finding: sufficient space above vibration stage to accommodate a wide variety of sample chambers**

# 10: Position of slits and BPM

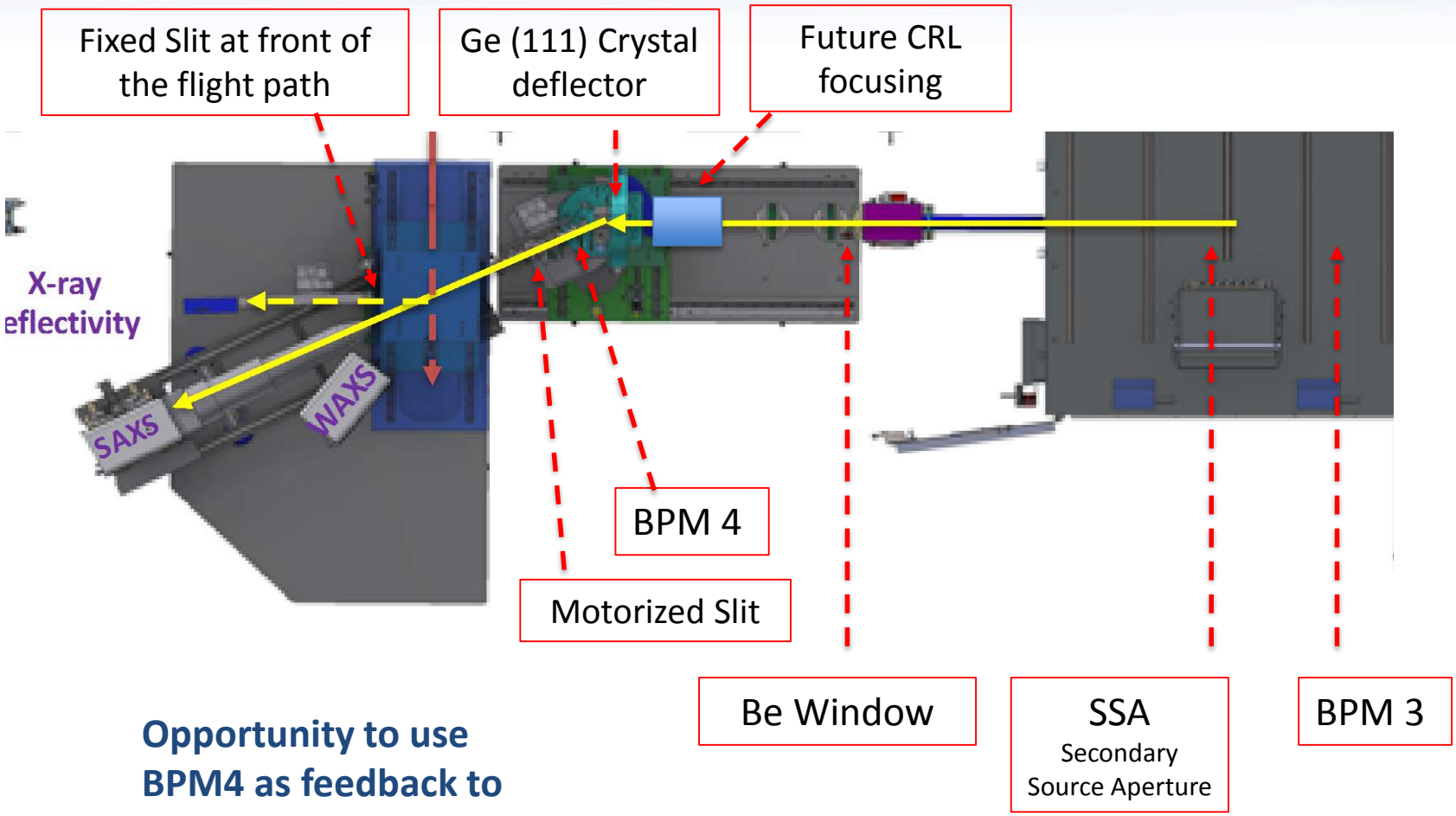


**Opportunity to use BPM4 as feedback to piezo on crystal tilt.**

# Key findings from the CDR Review

CDR Comments and Responses from CDR Review, available on Sharepoint

18 comments, 14 closed, 4 are ongoing

Summary of key findings follows:

**R1 (closed):** Clarify/prioritize the scope of work as soon as possible with an emphasis for making sure that we are aligned with new opportunity for unique capabilities in polymer processing.

*We have reached out to the processing community. Sent a letter of announcement seeking input..*

**R10 (closed):** Check the science case for resolution requirements for SAXS, particular at higher energies and in case a very short sample-detector distance of ~1.5m is pursued.

*Benefit of placing the detector at 3m (vs. 1.5m) does not justify the technical difficulties and associated costs.*

**R11 (ongoing):** Look into alternatives for the Pilatus1M, considering future requirements and availability of other detectors (including CCD for WAXS, Eiger1M in the equipment pool,…).

*We continue to explore alternatives to preferred detector and we would like to hold off purchasing some of the detectors until after technical commissioning. The pool has an Eiger 1M that we would like to use for SAXS*

**R4 (ongoing)** Clarify scope with respect to whether investments made for *J-PLS* can be used in the future buildout.

*Design is anticipating PLS and when possible J-PLS components will be resused.*

**R6 (ongoing):** Verify as soon as possible the performance of key components

We have engaged members of BNL Survey group to test various components. Tests expected in Match, 2018.

**R17 (closed):** If there is no other source of contingency, consider purchasing some components latter.

*This is a good suggestion and we are making schedule adjustments to delay acquisition of some "nice to have, but not essential" items such as vibration isolation, fluorescence detector, and visualization hardware.*

***R9 (closed):*** *Providing focusing at a single energy, e.g. with a stack of CRLs, might be the most cost-effective option to achieve some state-of-the-art capability.*

*Detailed in the following slides, moved sample table position in anticipation of future CRLs.*

# Adding vertical CRLs: SSA scheme (3:1)

SRW simulations with Oleg Tchoubar

PLS

multielectron mode
R_v = 4550, focused at SSA
R_h =7500 , focused at SMI (59 m)
**56 Be** lenses , r=0.05 mm at 50.0 m
*radius may only be available in 2D lenses*

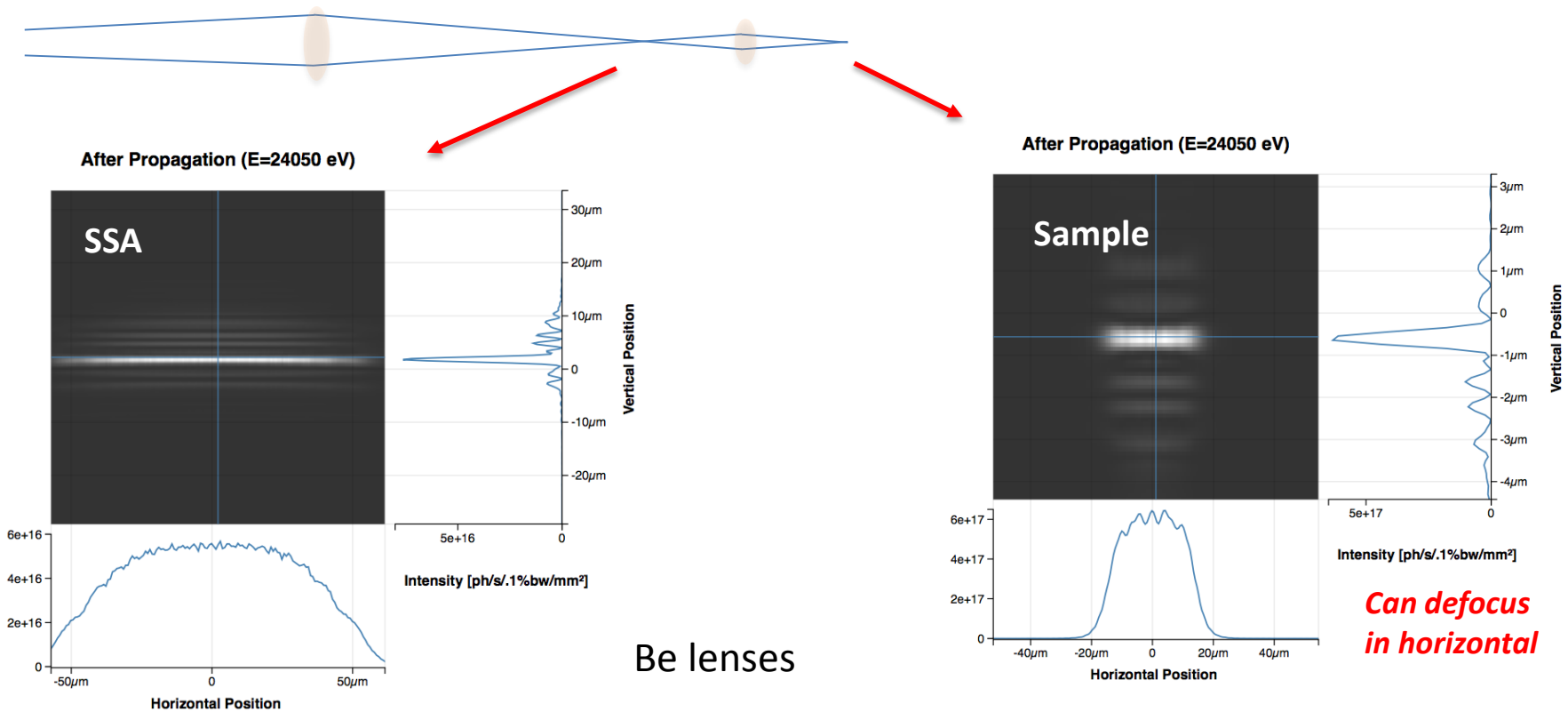


**Key findings: Excellent focus (56 lenses), longer distance between SSA & sample preferable.**

# Adding vertical CRLs: Collimating scheme, no SSA

PLS SMI

multielectron mode
R_v = 8500 , R_h =7500 , focused at SMI (59 m)
CRL, vertical only,
38 Be lenses , r=0.05 mm at 50.0 m

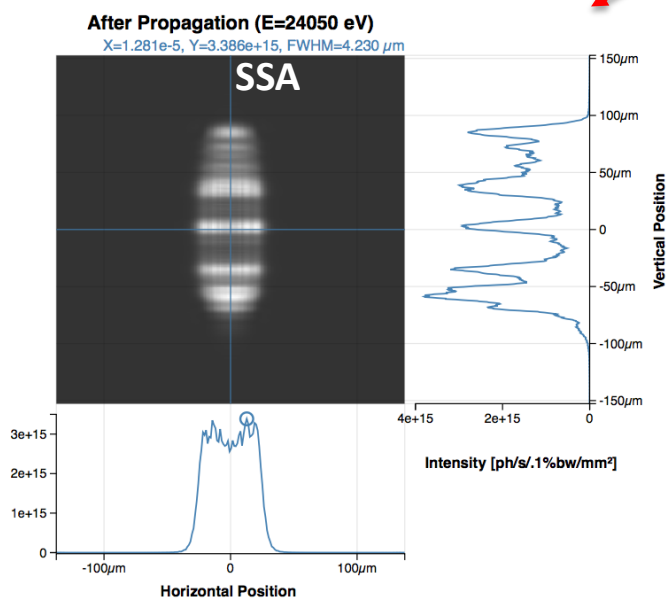


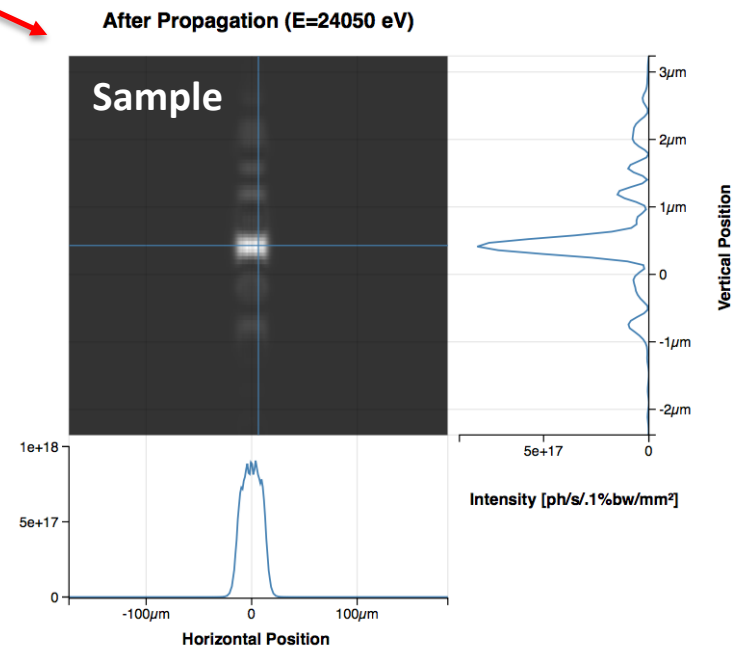


**Key findings: Excellent ideal focus (38 lenses), profile wings worse without SSA**

# Safety Considerations

- Chemical (organic) exhaust, will eventually require ventilation
  *trunk exists in the hutch*
- Working in the J-PLS hutch with SMI beam
  *PPS system for the beam pipe exists*
  *Requires reevaluation with motion in the hutch*
- EPS system for complex motor operations
  *detector collision and with the SMI beam path*
- Reevaluation of the hutch search procedures

# Recycled components from APS Liquid Spectrometer

## *will be shown in Daniel's talk*

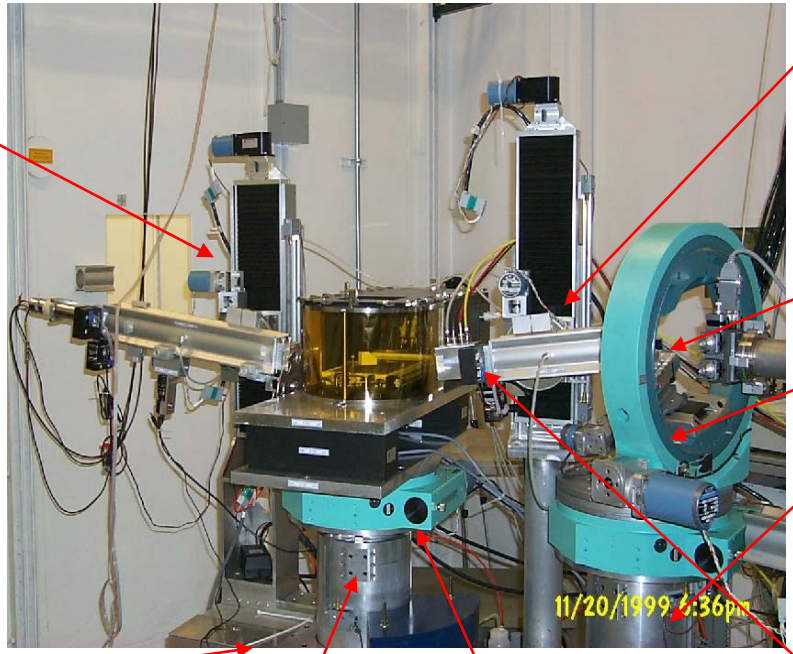


Vertical translation rotation (Huber 411)

Vertical translation rotation (Huber 411)

Crystal mount & translation

Eulerian Cradle

Crystal deflector stage

JJ x-ray slit

Sample rotation (Huber 430)

Detector rotation rotation (Huber 430)

Vertical sample stage

# J-PLS Team

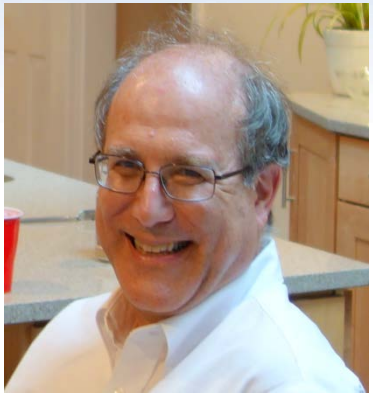

Ben Ocko
Scientist

Mark Schlossman
Scientific Consultant

Chris Stebbins

Lonny Berman
Project Management

Daniel Bacescu
Mechanical Engineer

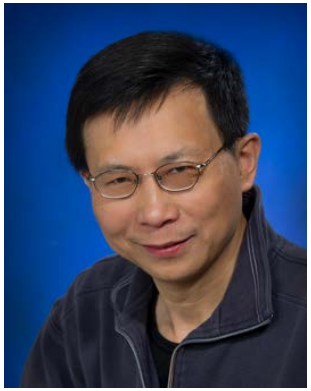

Zhijian Yin (ZY)
Controls Engineer

Steve Hulbert
Mechanical Engineering
Group Leader (interim)

Ron Pindak
Complex Scattering
Group Leader

Additional Advisors/Contributors: Masa Fukuto, Lutz Wiegart, Lin Yang, Mikhail Zhernenkov, Chris Soles, Karsten Bruening, Bridget Murphy, Ivan Kuzmenko, Mike Toney, Andrei Fluerasu, & Chinedum Osuji

# Liquid Surfaces: Double Crystal Deflector Mode

## 12-ID-B Hutch Model 28Oct2015

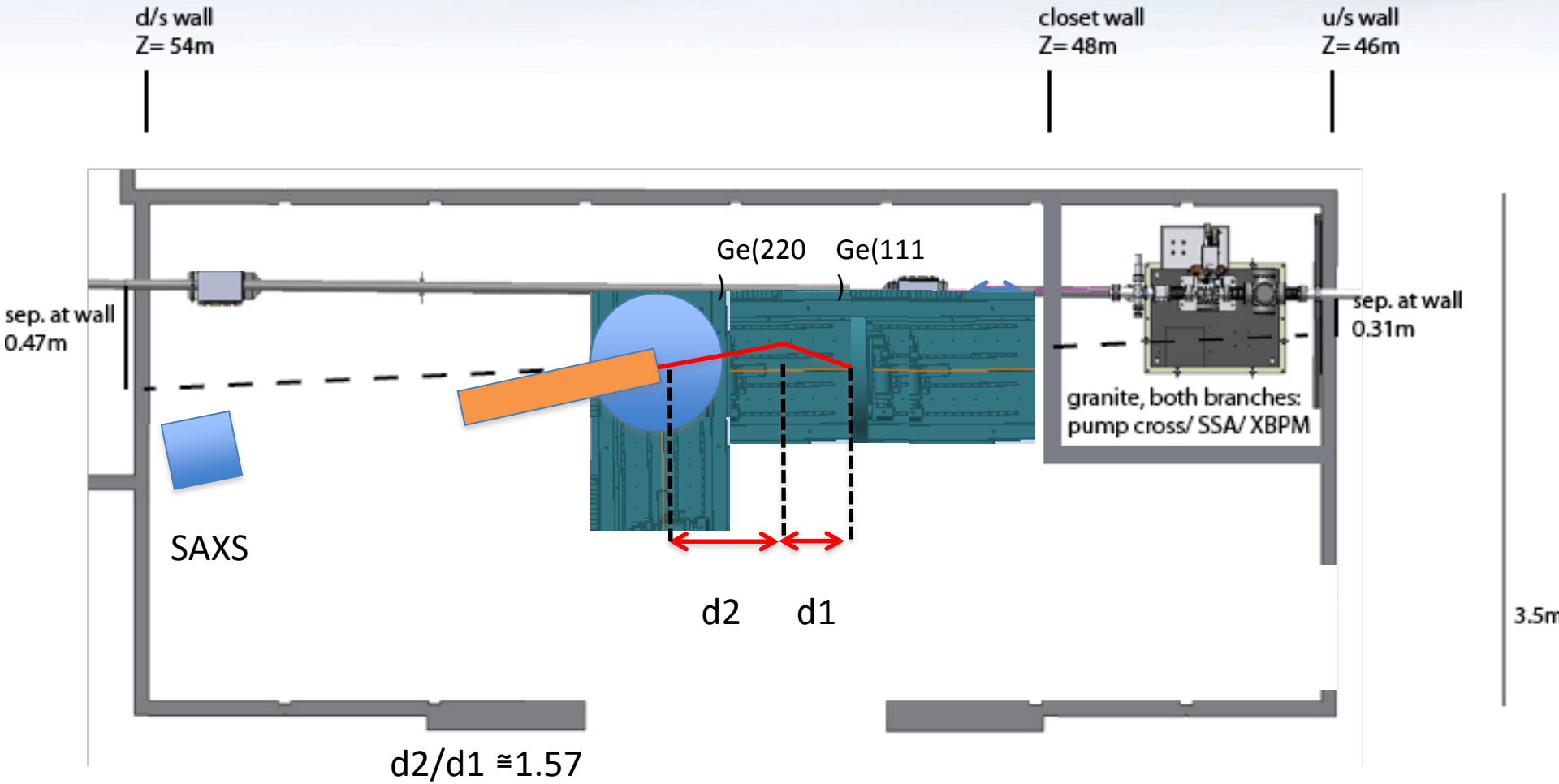

# Jumpstart Processing and Liquid Scattering (JPLS)

## PRELIMINARY DESIGN REVIEW

*February 12th, 2018*

*Mechanical Engineer: D.M. Bacescu*

# JPLS PRELIMINARY DESIGN - OUTLINE

1. **JPLS Layout @ SMI BL 12-ID, Hutch B**
2. **JPLS Layout while SMI is operated**
3. **Crystal deflector**
   - Assembly
   - X-Y-Z motion assembly
   - Goniometer stages overview
   - Incident flight path & diagnostics
   - Beam position monitor
4. **Sample stage**
   - Assembly
   - Liquid and processing setup
   - X-Y Linear motion assembly
5. **Detector arm**
   - Assembly
   - Flight tube and beam stop
   - SAXS, XR detector positioning
6. **Linear guides and ball screw for JPLS**

# JPLS LAYOUT @ SMI BL 12-ID, HUTCH B

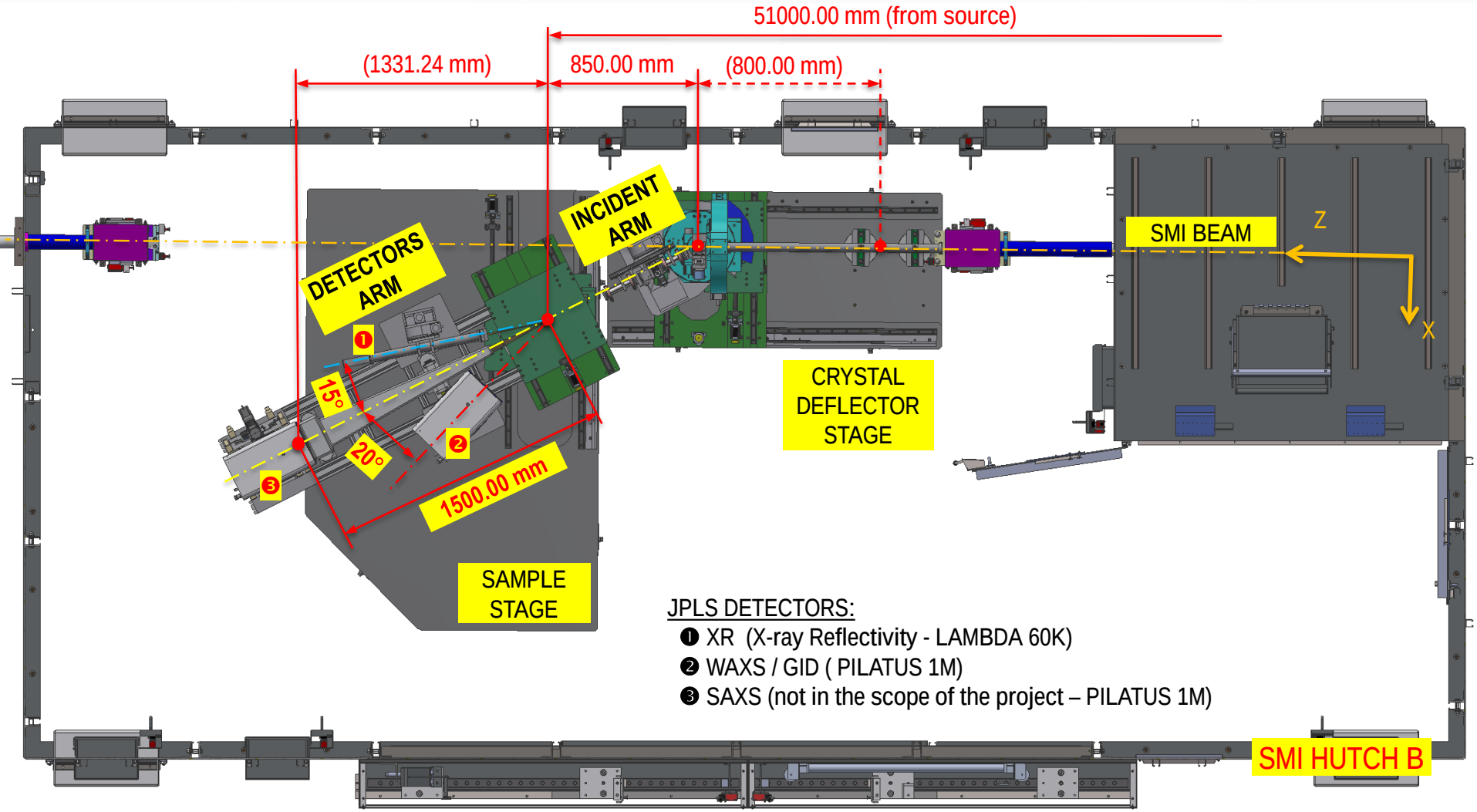


JPLS DETECTORS:

❶ XR (X-ray Reflectivity - LAMBDA 60K)

❷ WAXS / GID ( PILATUS 1M)

❸ SAXS (not in the scope of the project – PILATUS 1M)

# JPLS LAYOUT WHILE SMI IS OPERATED

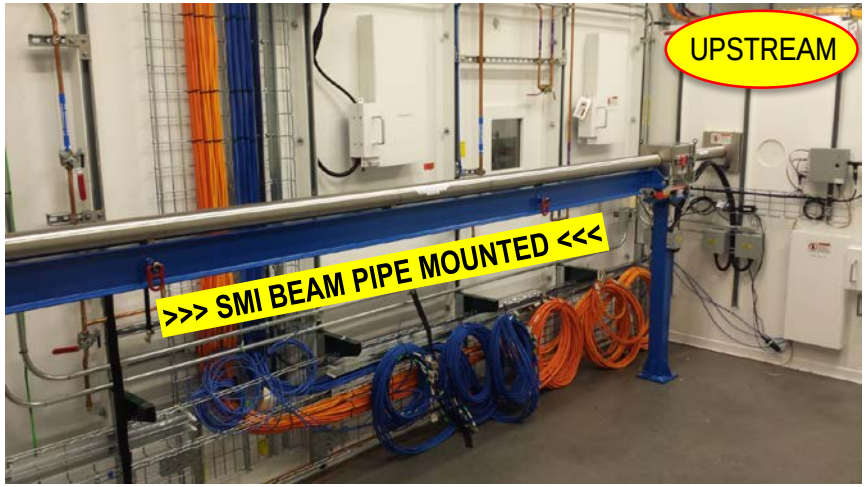


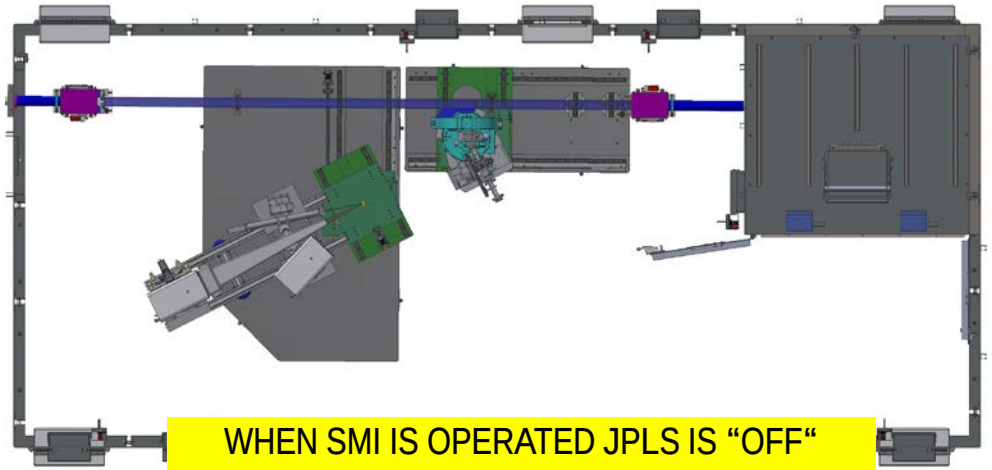

WHEN SMI IS OPERATED JPLS IS "OFF" AND POSITIONED IN "PARKING" MODE

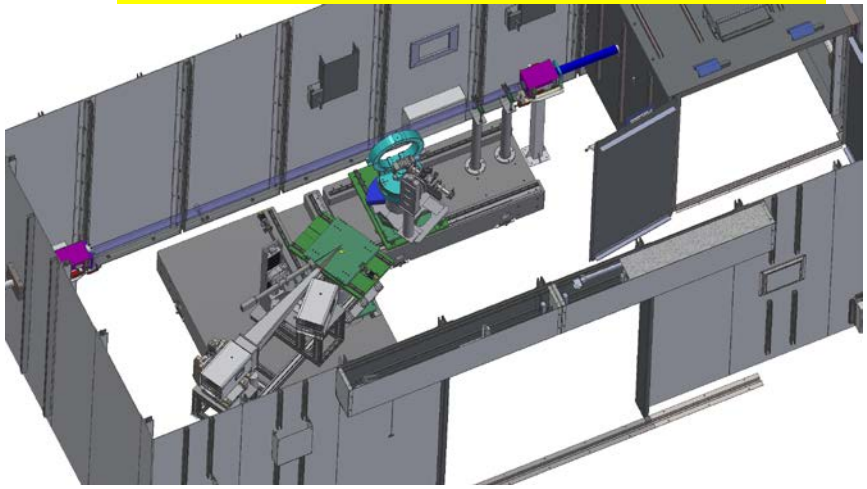

# CRYSTAL DEFLECTOR
## Assembly

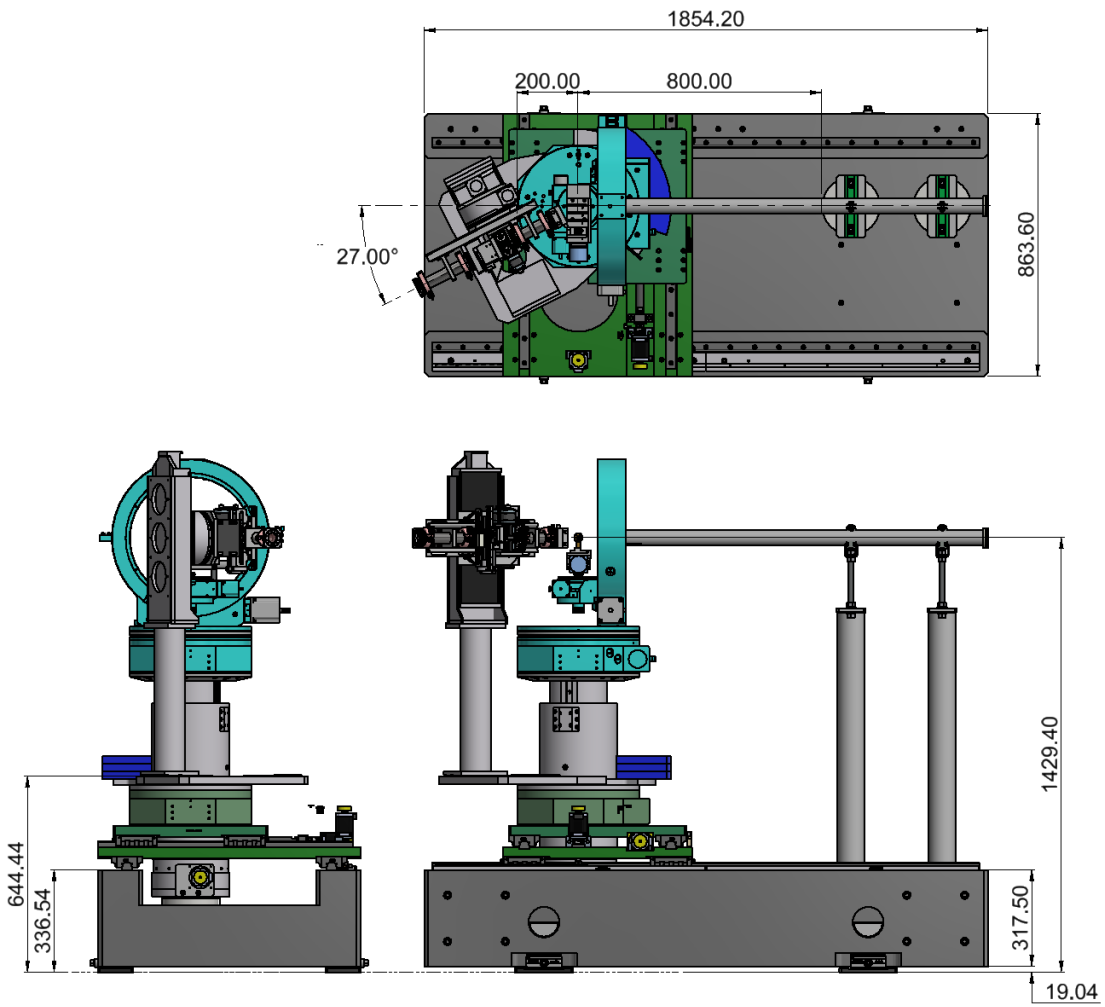


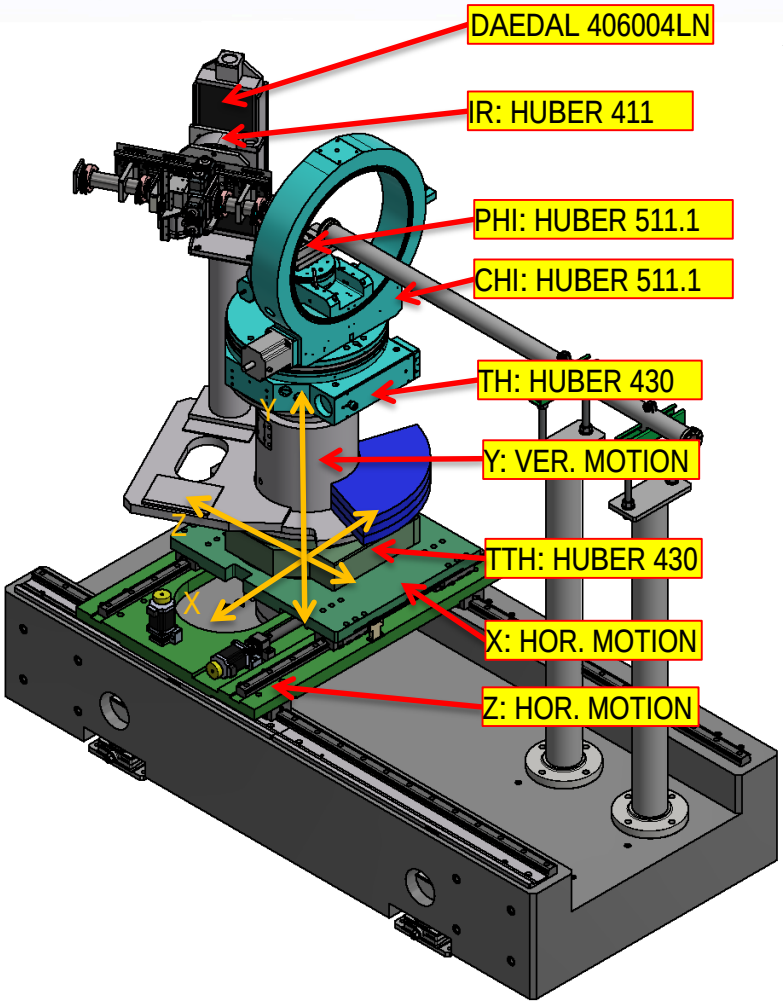

# CRYSTAL DEFLECTOR

## X-Y-Z Linear Motion Assembly

X Motion (New):

- THK SVR35 LC Linear guide,
- THK SBK2520 Ball Screw & Stepper Motor
- Stroke: ± 150.0 mm
- Resolution: 1.0 μm / Accuracy: 2.0 μm

Y Motion (Refurbished):

- AccuMax CM35AABP/RM35PL650
- Jack Screw & Stepper Motor
- Stroke: ± 75.0 mm
- Resolution: 0.5 μm / Accuracy: 1.0 μm

Z Motion (New):

- THK SVR35 LC Linear guide,
- Gear Rack & Pinnion & Stepper Motor
- Stroke: ± 500.0 mm
- Resolution: 10.0 μm / Accuracy: 10.0 μm

Granite Block (New):

- Dimensions: 34 in x 73 in x 12.5 in (W x L x H)
- Weight: ~ 1100 kg

Granite Vertical, Pitch, Roll Adjustment (New):

- AIRLOC 2120-KSKC wedgmounts
- Max. Load 5000 daN
- Inclination 3°
- Leveling range -5/+4 mm

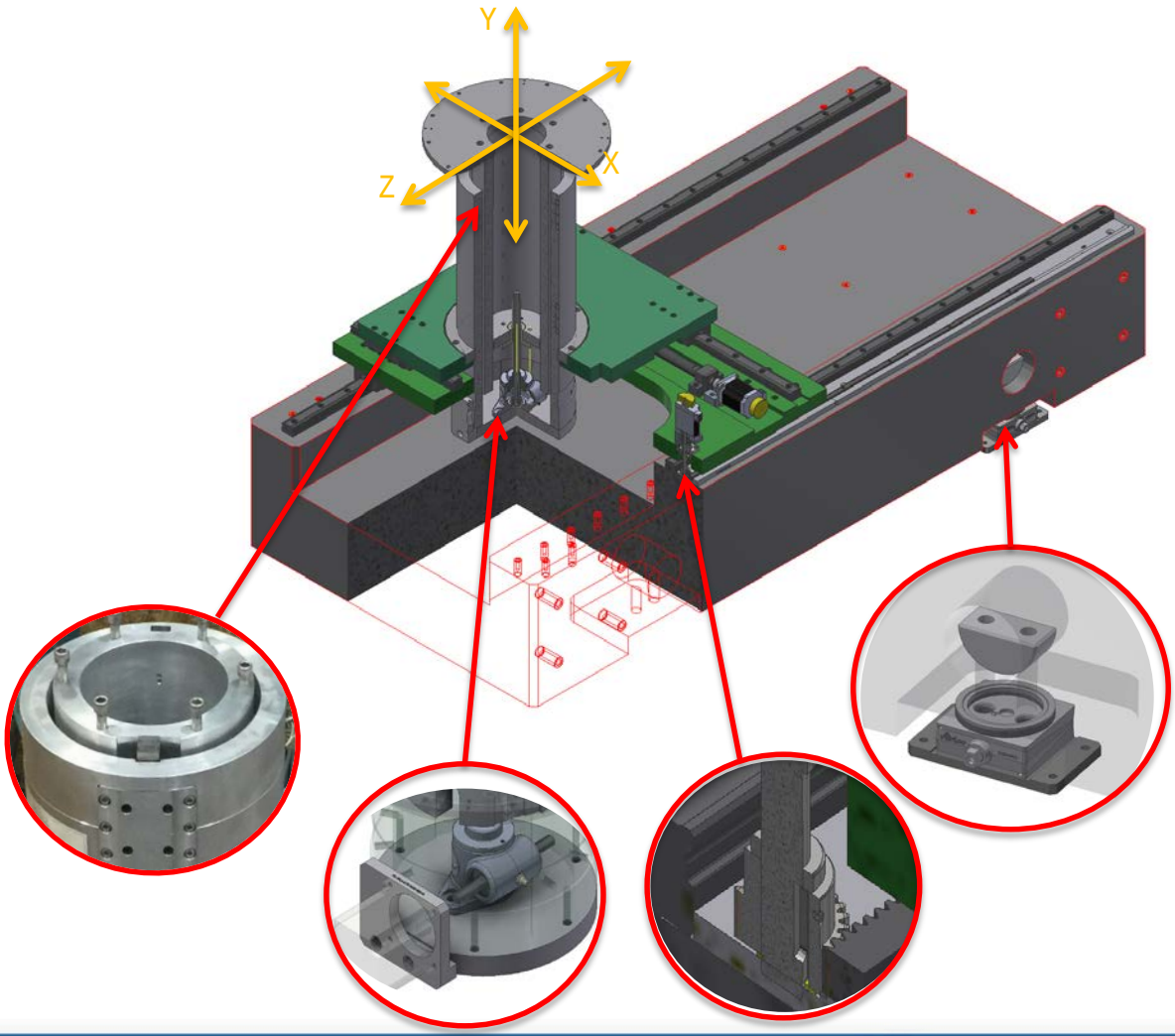

# CRYSTAL DEFLECTOR

## Goniometer Stages Overview

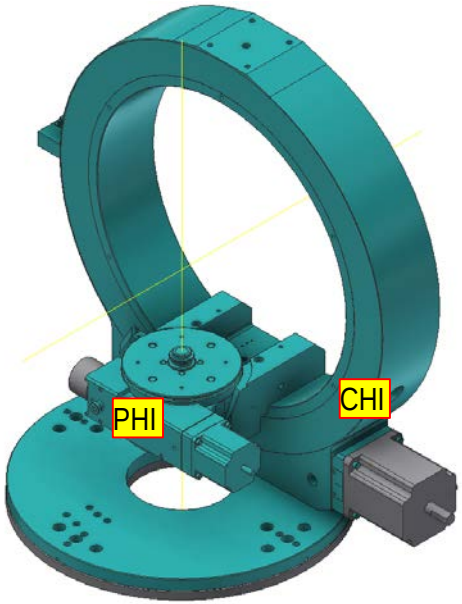


### HUBER GONIOMETER 511.1

| Specifications: | | |
|---|---|---|
| Sphere of confusion [mm]: | | 0.02*** |
| Parallelity (Chi-plane to Phi-axis) ["]: | | +/- 20*** |
| Weight [kg]: | | 18 |
| | Phi-Circle | Chi-Circle |
| Travel range [°]: | 360 | 360 |
| Gear ratio: | 360:1 / 180:1** | 360:1 |
| Accuracy ["]: | 30 | 30 |
| Repeatability (unidir.) ["]: | <= 2 | <= 2 |
| Reversal error ["]: | <= 10 | <= 15 |
| Resolution [°]: | 0.001* / 0.002* ** | 0.001* |
| Min. drive torque [Nm]: | 0.1 / 0.13** | 0.8 |
| Flange size [mm]: | 56 | 56 |

- Huber goniometer are 10-20 years old!
- Goniometers resolution and accuracy should be verified
- NSLS-II survey group will provide support
- We are evaluating how to integrate encoders

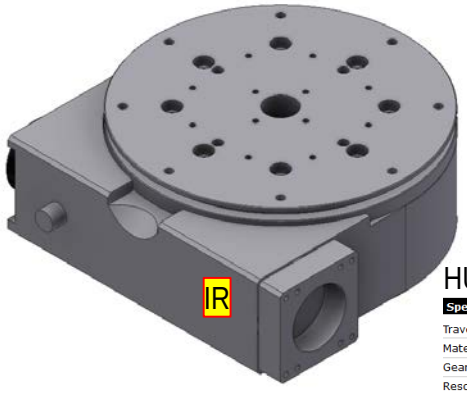


### HUBER GONIOMETER 411

| Specifications: | |
|---|---|
| Travel range [°]: | 360 |
| Material (housing/worm gear): | Aluminium/Bronze |
| Gear ratio: | 360:1 / 180:1* |
| Resolution [°]: | 0.001 / 0.002* ** |
| | 0.0005 / 0.0001 minimum (with gear box 20:1) |
| Min. drive torque [Nm]: | 0.40 / 0.45* |
| Max. output torque [Nm]: | 15 / 18* |
| Stiffness [µrad/Nm]: | 1 |
| Weight [kg]: | 6 |
| Flange size [mm]: | 56 |
| Transm. aperture [mm]: | 20 (standard) - 101 |

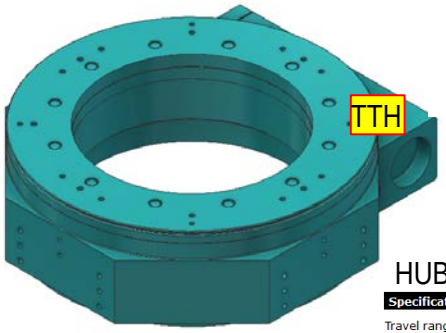


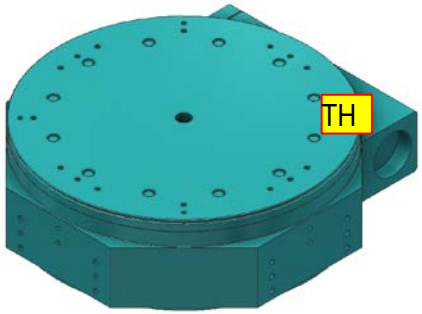


### HUBER GONIOMETER 430

| Specifications: | |
|---|---|
| Travel range [°]: | 360 |
| Material (housing/worm gear): | Aluminium/Bronze |
| Gear ratio: | 360:1 |
| Resolution [°]: | 0.001* |
| | 0.00005 minimum |
| Min. drive torque [Nm]: | 1.5 |
| Max. output torque [Nm]: | 100 |
| Stiffness [µrad/Nm]: | 0.1 |
| Weight [kg]: | 55 |
| Flange size [mm]: | 82 |
| Transm. aperture [mm]: | 260 (standard) |

* step motor, 1000 steps/revolution

# CRYSTAL DEFLECTOR

## Incident Flight Path & Diagnostics

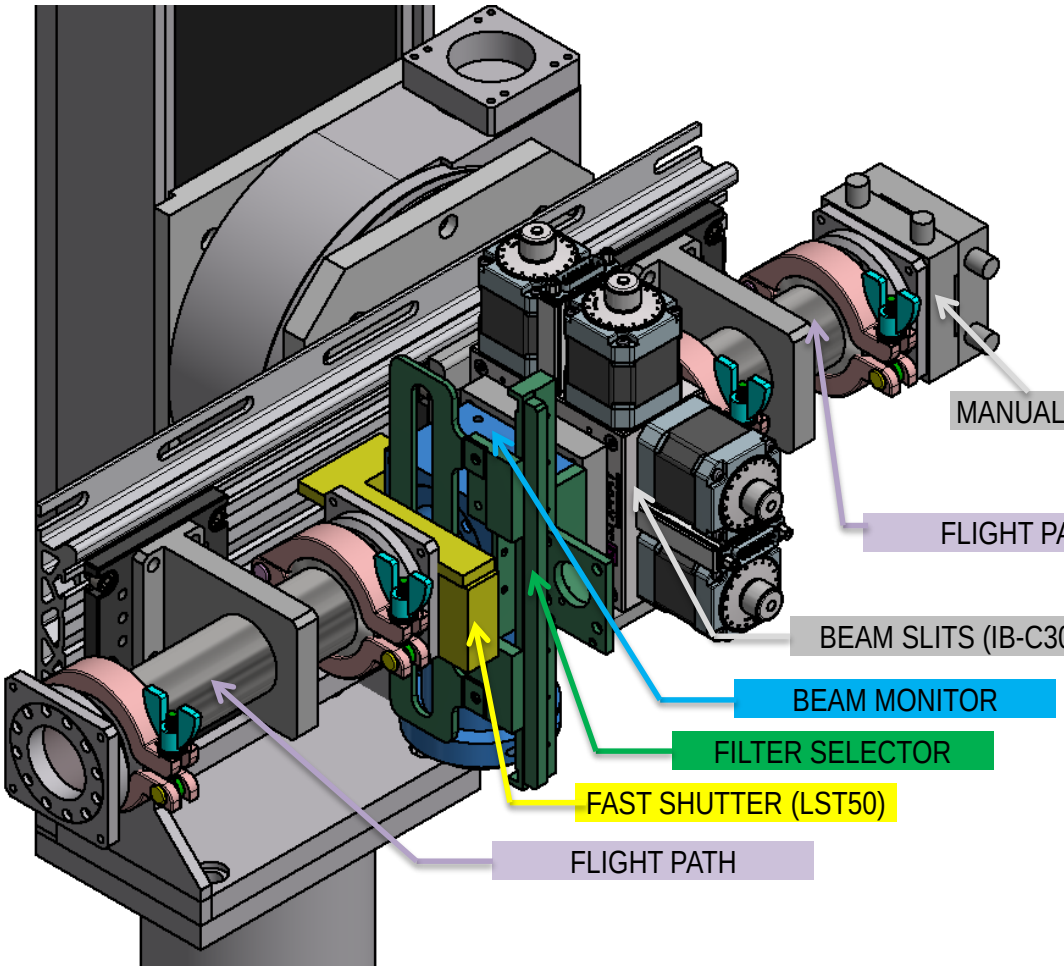


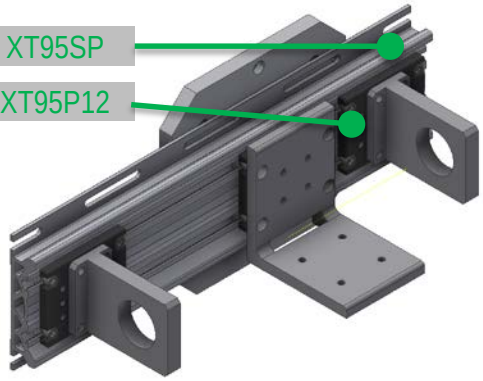


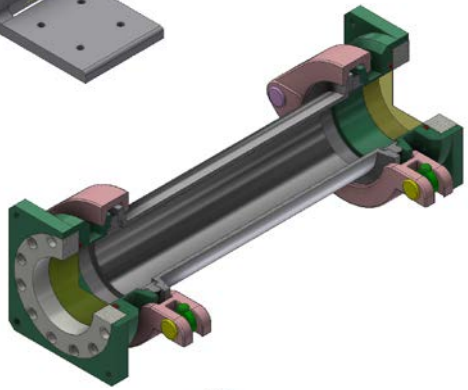

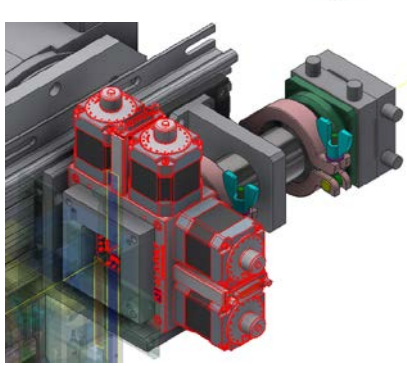

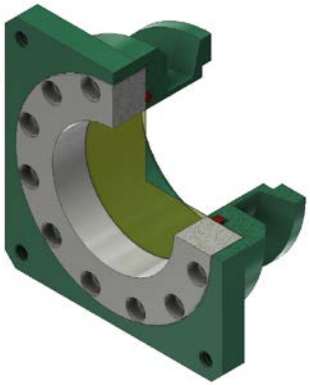

# CRYSTAL DEFLECTOR

## Beam Position Monitor

YAG screen & RIGI chip assembly commercial available

IN CONSIDERATION FOR JPLS!

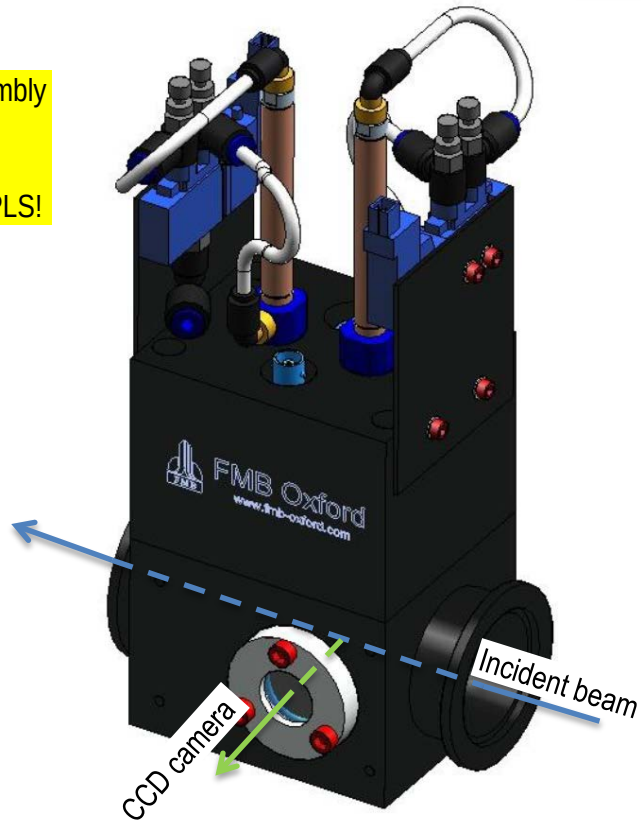


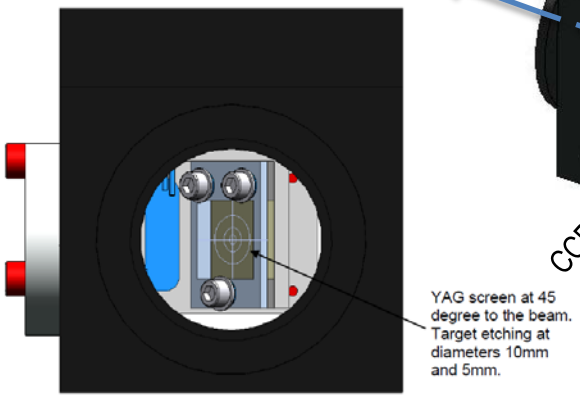


YAG screen in position

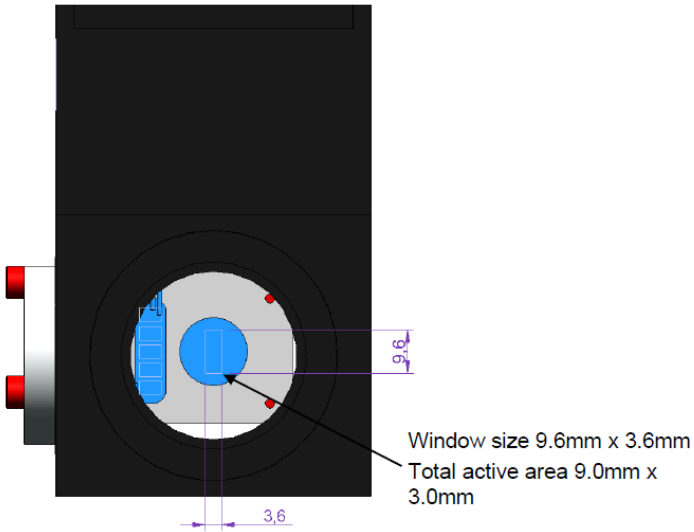


DECTRIS RIGI chip in position

# SAMPLE STAGE

## Assembly

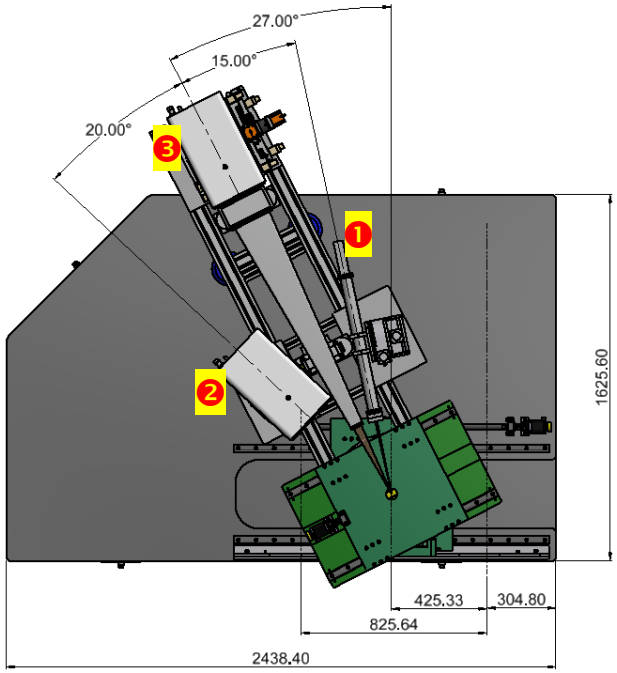


JPLS Detectors relative to the sample:

❶ XR detector @ 1000.0 mm

❷ WAXS / GID detector @ 500.0 mm

❸ SAXS 1500.0 mm (not in the scope)

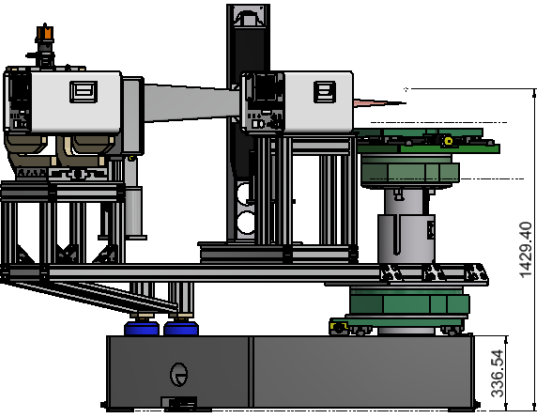


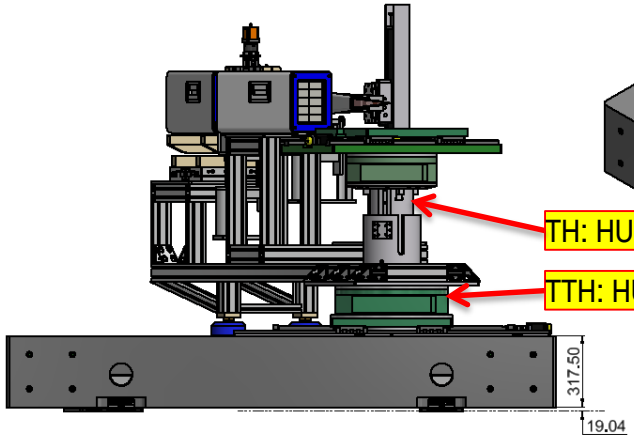


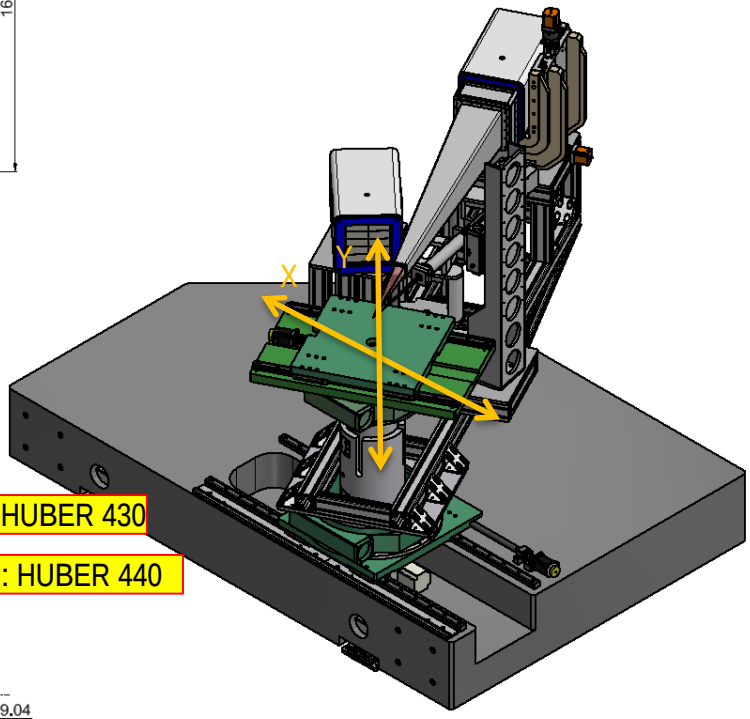

# SAMPLE STAGE

## Liquid and Processing Setup

LIQUID SURFACE SETUP

PROCESSING SETUP WITH ENVIRONMENTAL ENCLOSURE

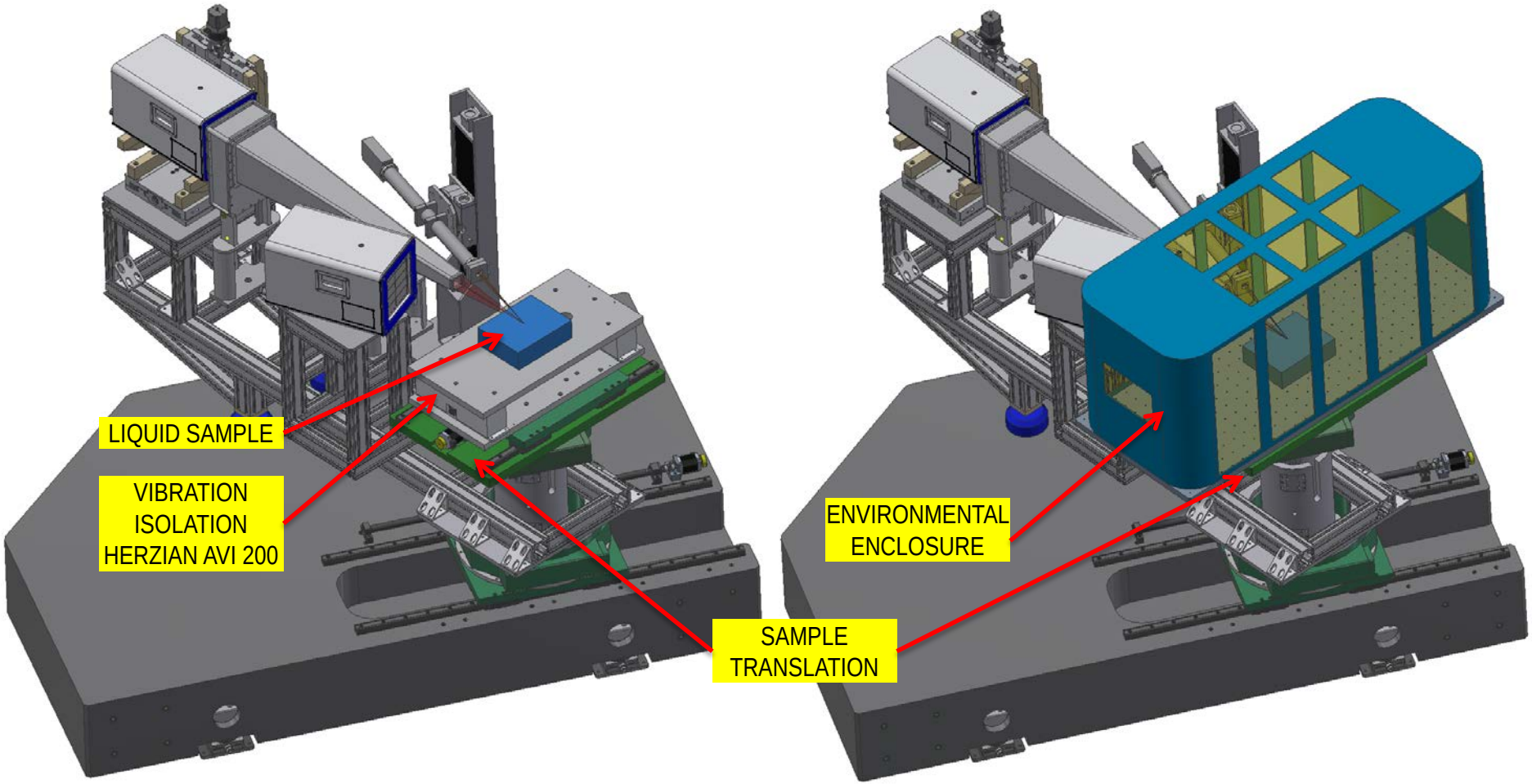

# SAMPLE STAGE

## X-Y Linear Motion & Sample Translation

X Motion (New):
- THK SVR35 LC Linear guide,
- THK SBK2520 Ball Screw & Stepper Motor
- Stroke: ± 500.0 mm
- Resolution: 1.0 μm / Accuracy: 2.0 μm

Y Motion (Refurbished)
- AccuMax CM35AABP/RM35PL650
- Jack Screw & Stepper Motor
- Stroke: ± 125.0 mm
- Resolution: 0.2 μm / Accuracy: 1.0 μm

Sample Translation (New):
- THK SVR35 LC Linear guide,
- THK SBK2520 Ball Screw & Stepper Motor
- Stroke: ± 150.0 mm
- Resolution: 1.0 μm / Accuracy: 2.0 μm

Granite Block (New):
- Dimensions: 64 in x 96 in x 12.5 in (W x L x H)
- Weight: ~ 3236 kg

Granite Vertical, Pitch, Roll Adjustment (New):
- AIRLOC 2120-KSKC wedgmounts
- Max. Load 5000 daN
- Inclination 3°
- Leveling range -5/+4 mm

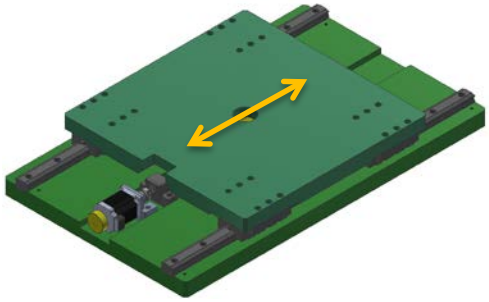

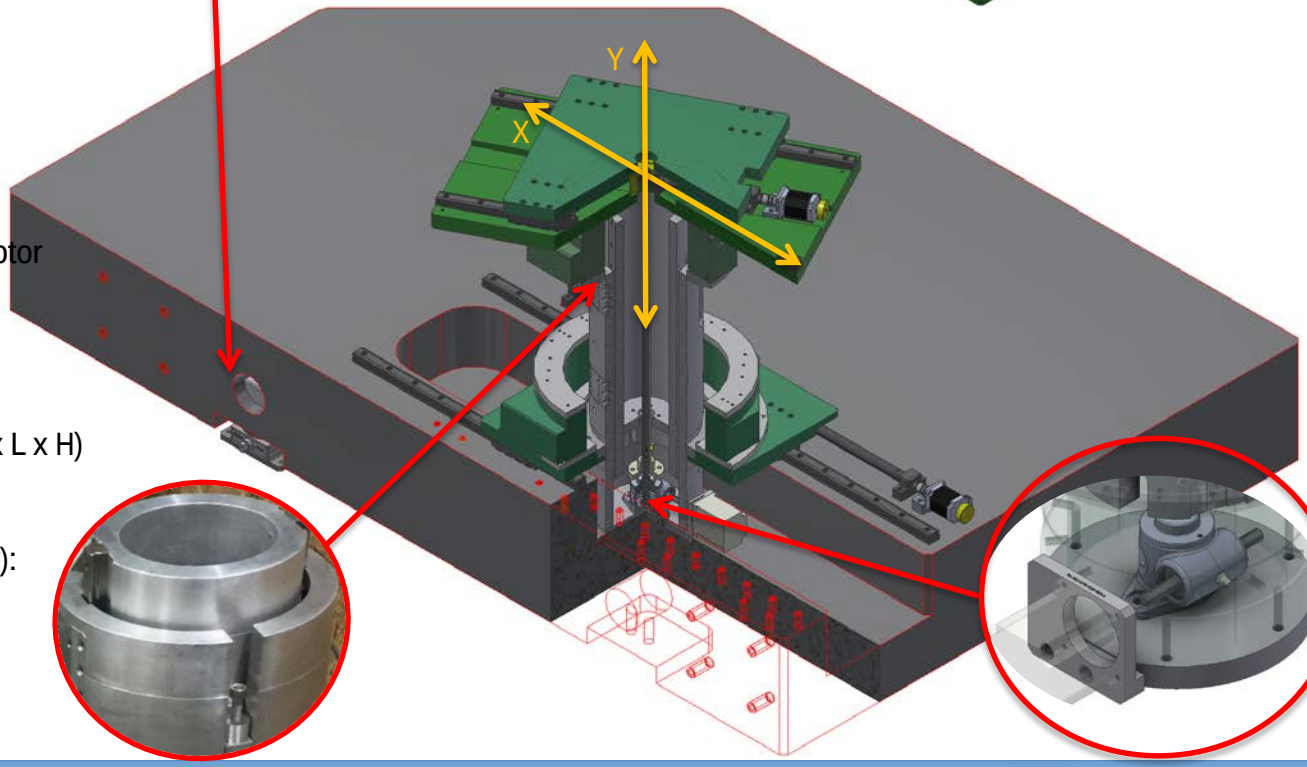




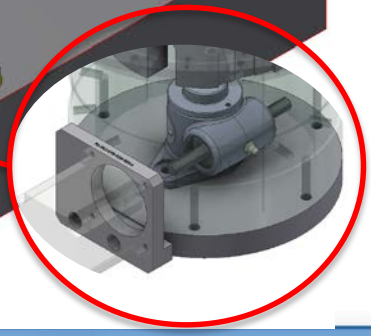

# DETECTOR ARM

## Assembly

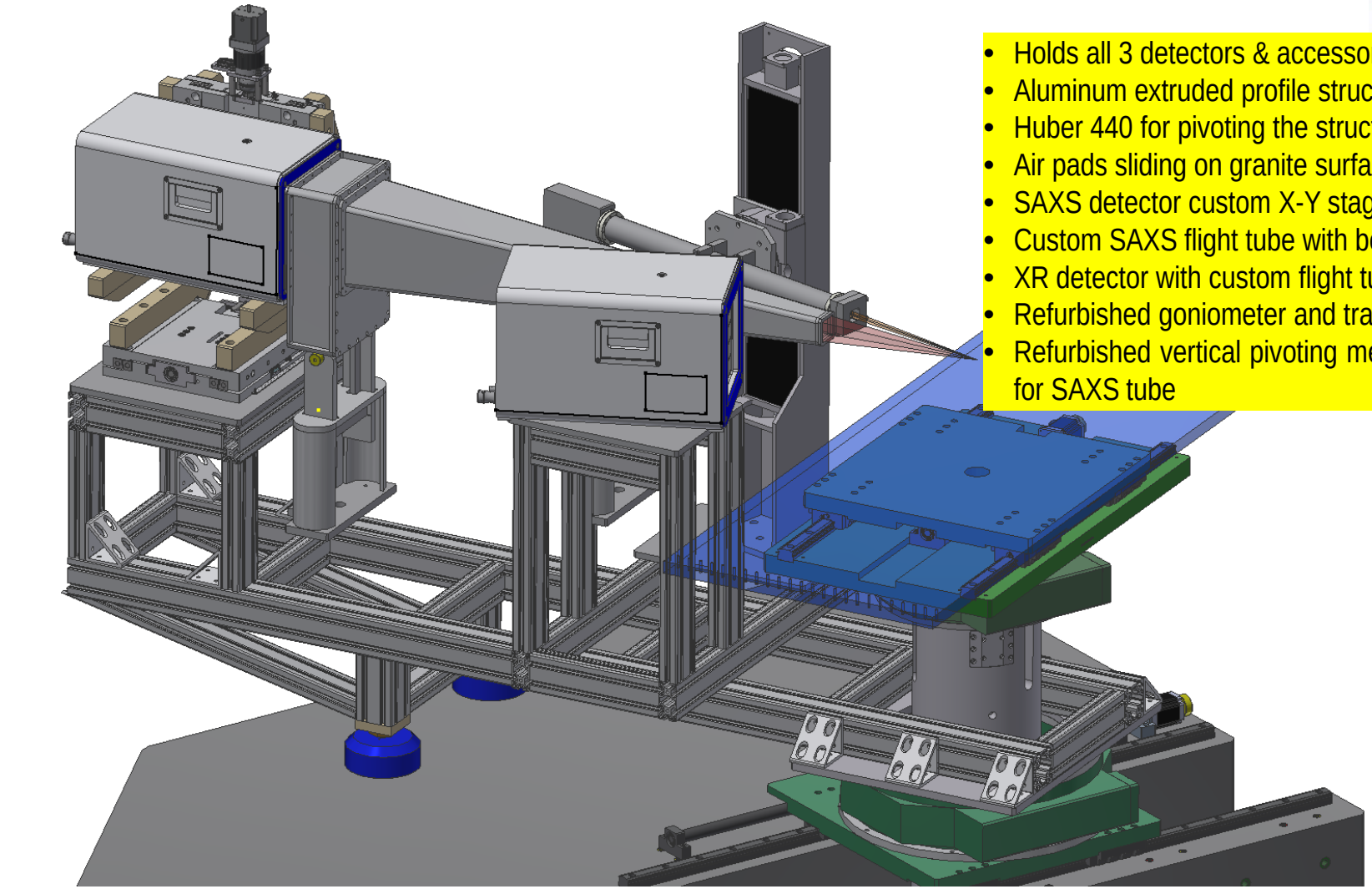

- Holds all 3 detectors & accessories
- Aluminum extruded profile structure
- Huber 440 for pivoting the structure
- Air pads sliding on granite surface
- SAXS detector custom X-Y stage
- Custom SAXS flight tube with beam stop
- XR detector with custom flight tube
- Refurbished goniometer and translation
- Refurbished vertical pivoting mechanism for SAXS tube

# DETECTOR ARM

## Flight Tubes & Beam Stop

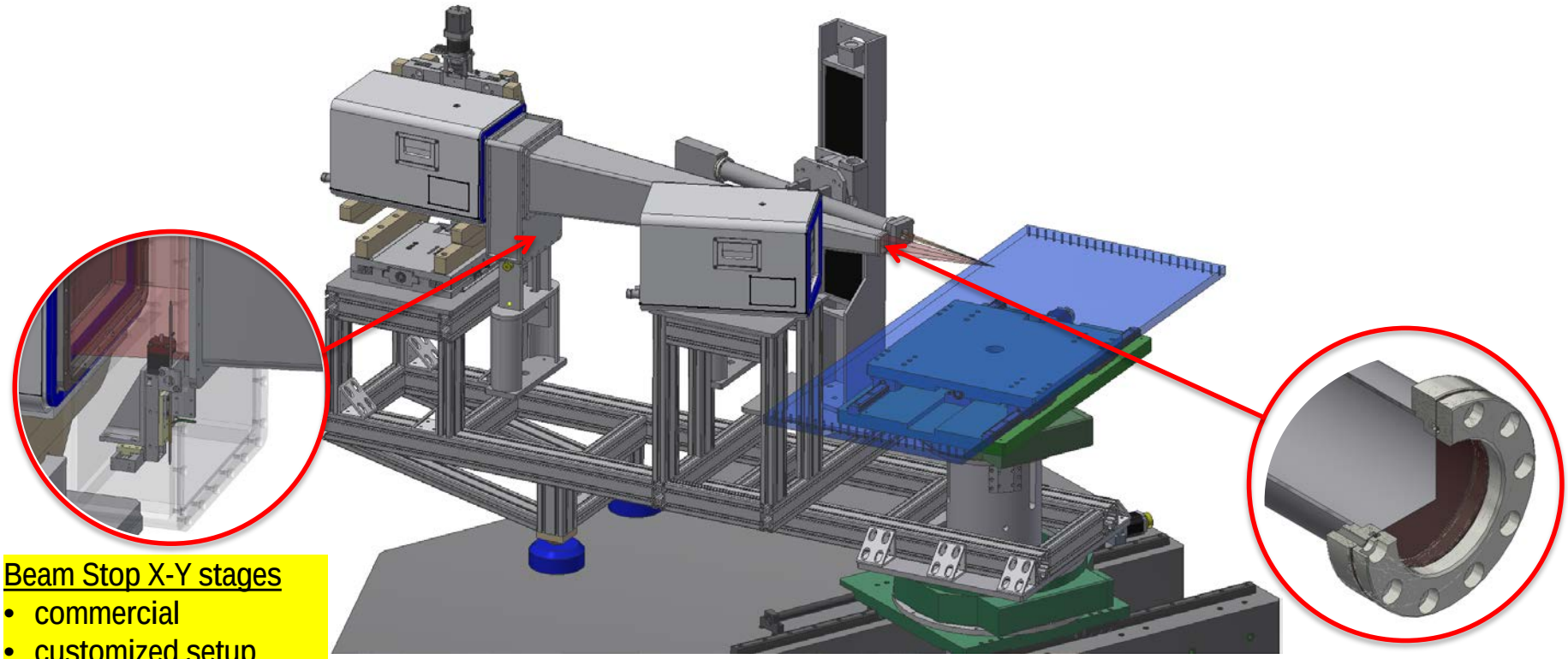

Beam Stop X-Y stages

- commercial
- customized setup
- mounted inside SAXS flight tube
- lead screw & nut
- stepper motor,
- limit switches, encoder

Custom made Flight tubes

- SST tubes
- CIRLEX / KAPTON window
- rotation positioning
- Translation positioning

# DETECTOR ARM

## SAXS, XR Detectors Positioning

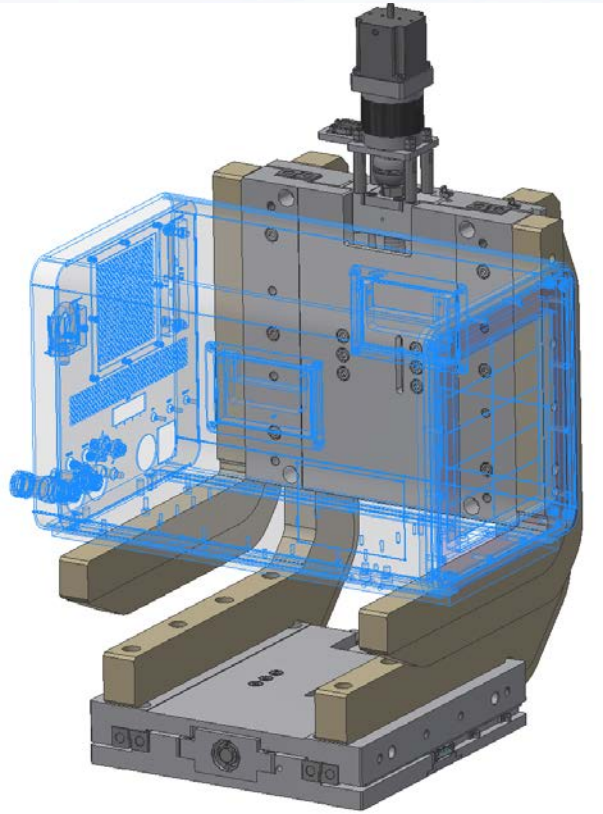

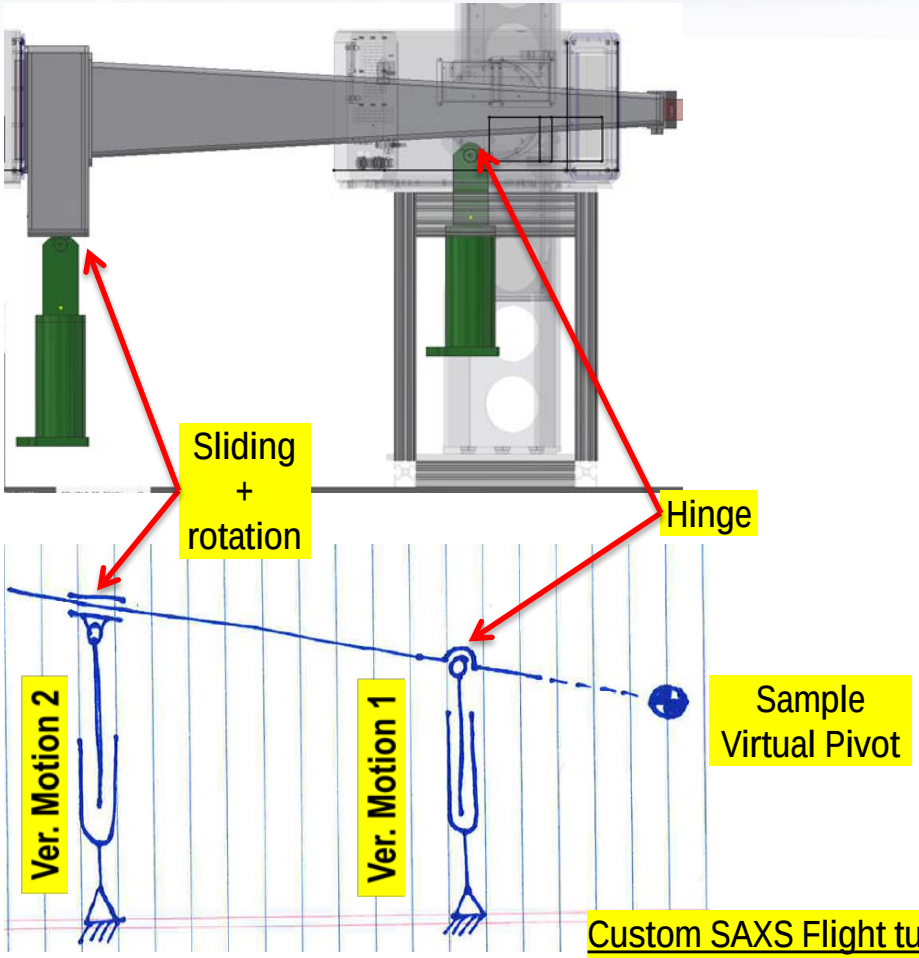


SAXS Detector X-Y stage

- lead screw and backlash free nut
- Gear head & stepper motors,
- Encoder & limit switches
- Cross rolled linear guides

Custom SAXS Flight tube

- Tube vertical pivoting @ sample
- One end hinged & ver. translation
- Other end ver. translation

# LINEAR GUIDES & BALL SCREW FOR JPLS

Compared to conventional ball products the caged ball (used in linear guides and ball screws) virtually eliminates noise and friction from colliding balls and offer superior performances.

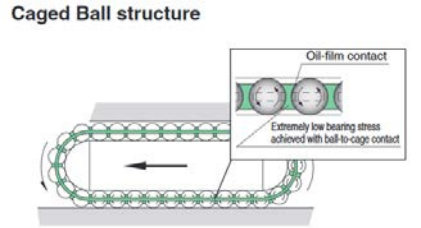


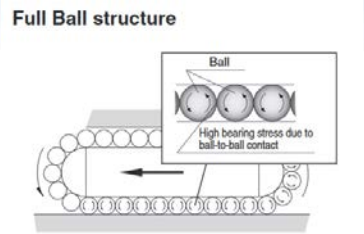


Ball Screw Model SBK

- low noise, acceptable running sound
- low torque fluctuation
- smooth motion
- Increase grease retention (better lubrication)
- maintenance-free operation
- longer service life

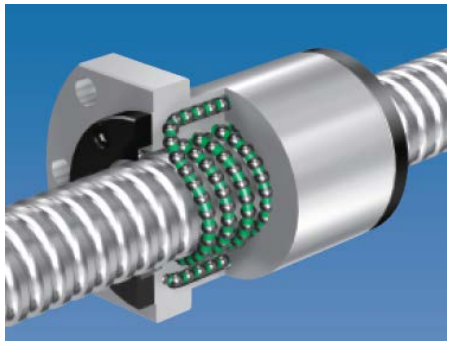

Linear Guide Model SVR

- higher rigidity
- higher load bearing capacity
- low noise, smooth motion
- Increase grease retention
- maintenance-free operation
- longer service life

Drawbacks: susceptible to a misalignment of mounting surface and mounting errors

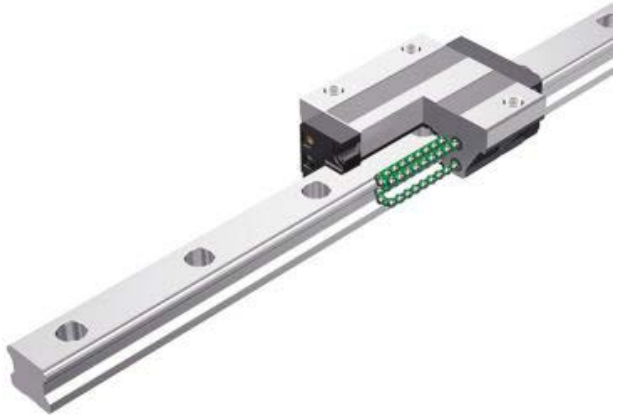

# THANK YOU!

# JPLS Beamline Controls and EPS

PDR Review
Feb 12, 2018

Zhijian Yin (ZY)
Beamline Controls Group Leader

# Beamline control architecture

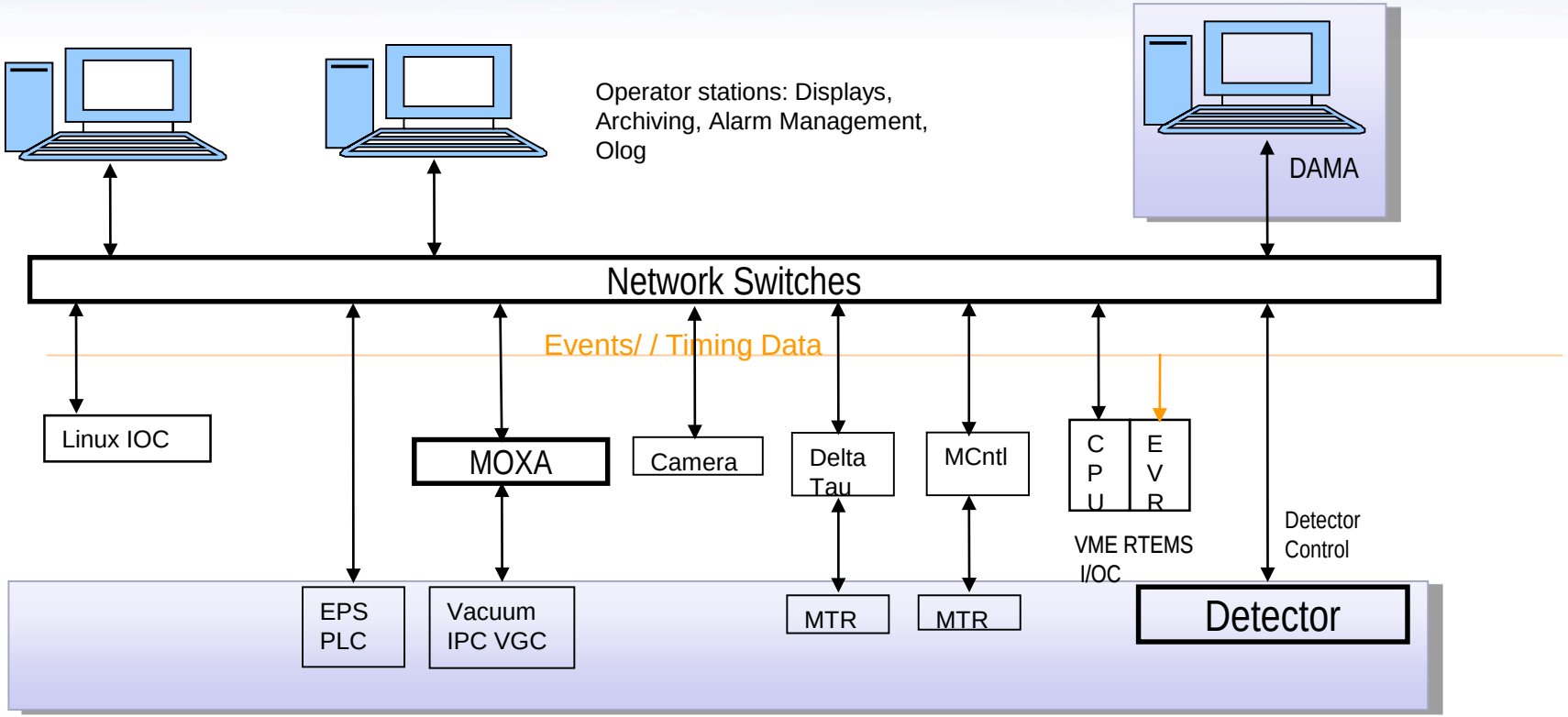

# Scope of controls work (1)

- Motion Control (1)
  - Use standard Delta Tau Geobrick-LV-NSLS-II controller: 8 axes, 8 encoder channels, GPIO, rack mount, built-in amplifier/driver, can drive servo, 2-phase stepper with microstepping (but no 5-phase). Ethernet interface
  - QuadPS supplies power up to 4 Geobrick-LV
  - SMI construction has already installed 3 motion controllers and 1 power supply for 24 axes of motion to use for JPLS instruments. Controllers are installed on the B Hutch roof rack
  - Motor cables are already run, but need to be terminated

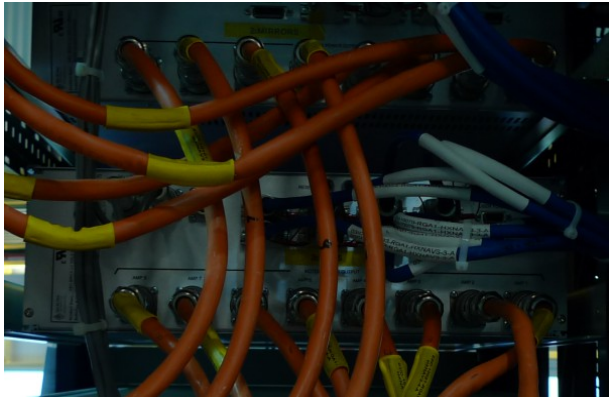

# Scope of controls work (2)

- Motion Control (2)
  - 5-phase steppers on the existing instruments are to be replaced with equivalent 2-phase steppers, and retrofit with standard NSLS-II motor connectors
  - Extra 16 axes of motion are added for additional axes (slits etc): add 2 DeltaTau Geobrick controllers and 1 QuadPS power supply. Current plan is to install controller next to the instrument
  - Most of axes with existing instruments do not have encoders, default DeltaTau parameters almost work out of box
  - Some axes will add angular/linear encoders to achieve the required resolution and accuracy. We can run closed-loop motion for these axes. Tuning for a few axes (mostly involve gear reducers) could be time consuming. Alternatively, encoder readings can be readout separately with open loop motion
  - The labor cost estimate is 2h/axis for motor tuning. On average, this should cover the mostly easy and a few difficult axes

# Scope of controls work (3)

- Controls Infrastructure
  - 1 Linux IOC server
  - 1 network switch, network installation (network cables, fiber, network config)
  - 2 Linux workstations each with dual monitors and TV displays
  - 2 gigE cameras for diagnostics
  - Channel archiver to share with SMI (in place)
  - Data storage to share with SMI (in place)
  - Controls of SMI FOE instruments to use cagateway, similar to cagateway to/from accelerator at beamlines
  - EPICS IOC and CSS screens (software)

# Scope of controls work (4)

- Detector integration
  - Proposed detectors Pilatus 1M, Lambda 60K have EPICS areaDetector drivers
- EPS
  - No vacuum instruments are included in the current design. EPS scope mostly includes likely IO requirements that come with final designs of the beamline
  - Motion protection: EPS to send amplifier disable signal to the STO (Safe Torque Off) input on the Delta Tau controller (controller modification to bring out the input signal needs to be made)
  - A cost of $5000 (M&S) is included in EPS scope: remote I/O enclosure, Allen-Bradely PLC I/O modules etc

# Controls Schedule

| | | | | | | |
|---|---|---|---|---|---|---|
| **Beamline Infrastructure** | | | | | | |
| **EPS** | | | | | | |
| JPLS - EPS - Design & Development | 20 | 0% | 10-Sep-18 | 05-Oct-18 | 59 | $6,004 |
| JPLS - EPS - Procurement | 40 | 0% | 09-Oct-18 | 06-Dec-18 | 59 | $5,694 |
| JPLS - EPS - Installation & Testing | 40 | 0% | 06-Mar-19 | 30-Apr-19 | 0 | $14,744 |
| **Controls** | | | | | | |
| **Basic System Controls** | | | | | | |
| JPLS Controls- Design and Development | 20 | 0% | 03-Apr-18 | 30-Apr-18 | 0 | $8,087 |
| JPLS Controls- Procurement and Materials | 30 | 0% | 05-Oct-18 | 19-Nov-18 | 0 | $80,975 |
| JPLS- DAMA- Design and Development | 30 | 0% | 14-Nov-18 | 28-Dec-18 | 24 | $24,467 |
| JPLS Controls- Procurement Complete | 0 | 0% | | 19-Nov-18 | 0 | $0 |
| JPLS Controls- Installation | 30 | 0% | 20-Nov-18 | 04-Jan-19 | 0 | $16,013 |
| JPLS Controls- Motion and Diagnostics Integration | 40 | 0% | 07-Jan-19 | 05-Mar-19 | 0 | $44,952 |
| JPLS- DAMA- Installation and Integration | 30 | 0% | 05-Feb-19 | 19-Mar-19 | 0 | $24,467 |
| JPLS Controls- Testing | 40 | 0% | 06-Mar-19 | 30-Apr-19 | 0 | $14,682 |
| JPLS- DAMA- Ready for Testing | 0 | 0% | | 19-Mar-19 | 82 | $0 |
| JPLS- DAMA- Testing | 30 | 0% | 20-Mar-19 | 30-Apr-19 | 0 | $24,467 |
| JPLS Controls and EPS Installation & Testing Complete | 0 | 0% | | 30-Apr-19 | 0 | $0 |
| JPLS Controls- Detector Integration | 20 | 0% | 17-Jun-19 | 15-Jul-19 | 0 | $6,117 |

- Duration of each activity is based on the time needed to finish similar activities from NEXT and BDN buildouts (standard costing sheets)
- Will reshuffle control resources to adapt to the overall JPLS project schedule

# Summary

- Scope, cost and schedule for JPLS beamline controls and EPS are well understood
- Bottoms up cost estimate has been performed for controls and EPS scope
- Standard NSLS-II beamline controls are well suited for JPLS
- Our control engineers have gained lots of experience with the buildouts of ABBIX, NEXT and BDN beamlines. We have the right people to deliver the controls work for JPLS

# JPLS Cost & Schedule

*Chris Stebbins, Project Engineer, NSLS-II*

*February 12, 2018*

# Outline

- Schedule Overview
- Project Milestones
- Critical Path
- Cost
- Responses to CDR Recommendations
- Conclusion

# Full Schedule

| Activity | Dur | % | Start | Finish | Float | Cost |
|---|---|---|---|---|---|---|
| Management | | | | | | |
| JPLS Project Support - Travel - Phase 1 | 143 | 65% | 14-Jul-17 A | 09-Feb-18 | 201 | $8,166 |
| JPLS Project Support - Management - Phase 1 | 143 | 90% | 14-Jul-17 A | 09-Feb-18 | 1 | $156,863 |
| JPLS Project Support - Management - Phase 2 | 156 | 0% | 12-Feb-18 | 21-Sep-18 | 201 | $196,315 |
| JPLS Project Support - Travel - Phase 2 | 156 | 0% | 12-Feb-18 | 21-Sep-18 | 201 | $14,852 |
| JPLS Project Support - Management - Phase 3 | 149 | 0% | 24-Sep-18 | 30-Apr-19 | 0 | $175,983 |
| JPLS Instrument Complete (Ready for ESR) | 0 | 0% | | 30-Apr-19 | 0 | $0 |
| JPLS ESR Complete | 0 | 0% | | 30-Apr-19* | 0 | $0 |
| Beamline Construction | | | | | | |
| End Station Procurement and Fabrication | | | | | | |
| JPLS Mechanical - Design & Development - Initial | 144 | 85% | 14-Jul-17 A | 12-Feb-18 | 0 | $84,480 |
| JPLS Preliminary Design Review (PDR) | 0 | 0% | | 12-Feb-18 | 0 | $0 |
| JPLS Mechancial - Design & Development - Final | 90 | 0% | 13-Feb-18 | 20-Jun-18 | 0 | $25,787 |
| JPLS PDR Post Review and report | 15 | 0% | 13-Feb-18 | 06-Mar-18 | 0 | $0 |
| JPLS Mechanical - Procurement - Granite Tables | 80 | 0% | 07-Mar-18 | 27-Jun-18 | 0 | $41,554 |
| JPLS Mechanical - Procurement - Slides and Screws | 80 | 0% | 07-Mar-18 | 27-Jun-18 | 0 | $29,280 |
| JPLS Final Design Review (FDR) | 0 | 0% | | 20-Jun-18 | 0 | $0 |
| JPLS Mechanical - Procurement - Endstation Hardware | 80 | 0% | 21-Jun-18 | 15-Oct-18 | 15 | $192,083 |
| JPLS - Control Station - Design & Development | 20 | 0% | 10-Sep-18 | 05-Oct-18 | 141 | $6,323 |
| JPLS Mechanical - Procurement of Pilatus 1M detector | 175 | 0% | 02-Oct-18 | 14-Jun-19 | 0 | $534,139 |
| JPLS Mechanical - Procurement - Vibration Isolation | 80 | 0% | 02-Oct-18 | 30-Jan-19 | 43 | $12,528 |
| JPLS Mechanical - Procurement - Silicon Drift Detector | 80 | 0% | 02-Oct-18 | 30-Jan-19 | 43 | $22,778 |
| JPLS Mechanical - Procurement - Visualization Hardware | 80 | 0% | 02-Oct-18 | 30-Jan-19 | 43 | $11,389 |
| JPLS Mechanical - Procurement of Lambda 256K detector | 175 | 0% | 02-Oct-18 | 14-Jun-19 | 0 | $28,472 |
| JPLS - Control Station - Procurement | 40 | 0% | 09-Oct-18 | 06-Dec-18 | 141 | $22,778 |
| JPLS Mechanical - Procurement and Fabrication Complete | 0 | 0% | | 02-Apr-19 | 72 | $0 |
| JPLS Mechanical - Procurement of Pilatus 1M detector Complete | 0 | 0% | | 14-Jun-19 | 20 | $0 |
| End Station Installation and Test | | | | | | |
| JPLS Mechanical - Assembly & Installation | 189 | 0% | 28-Jun-18 | 02-Apr-19 | 0 | $61,862 |
| JPLS - Control Station - Installation | 10 | 0% | 07-Dec-18 | 20-Dec-18 | 141 | $9,381 |
| JPLS - Control Station - Installation Complete | 0 | 0% | | 20-Dec-18 | 141 | $0 |
| JPLS Mechanical - Testing | 20 | 0% | 03-Apr-19 | 30-Apr-19 | 0 | $7,489 |
| JPLS Mechanical - Assembly, Installation and Testing Complete | 0 | 0% | | 30-Apr-19 | 0 | $0 |
| Beamline Infrastructure | | | | | | |
| EPS | | | | | | |
| JPLS - EPS - Design & Development | 20 | 0% | 10-Sep-18 | 05-Oct-18 | 59 | $6,004 |
| JPLS - EPS - Procurement | 40 | 0% | 09-Oct-18 | 06-Dec-18 | 59 | $5,694 |
| JPLS - EPS - Installation & Testing | 40 | 0% | 06-Mar-19 | 30-Apr-19 | 0 | $14,744 |
| Controls | | | | | | |
| Basic System Controls | | | | | | |
| JPLS Controls- Design and Development | 20 | 0% | 03-Apr-18 | 30-Apr-18 | 0 | $8,087 |
| JPLS Controls- Procurement and Materials | 30 | 0% | 05-Oct-18 | 19-Nov-18 | 0 | $80,975 |
| JPLS- DAMA- Design and Development | 30 | 0% | 14-Nov-18 | 28-Dec-18 | 24 | $24,467 |
| JPLS Controls- Procurement Complete | 0 | 0% | | 19-Nov-18 | 0 | $0 |
| JPLS Controls- Installation | 30 | 0% | 20-Nov-18 | 04-Jan-19 | 0 | $16,013 |
| JPLS Controls- Motion and Diagnostics Integration | 40 | 0% | 07-Jan-19 | 05-Mar-19 | 0 | $44,952 |
| JPLS- DAMA- Installation and Integration | 30 | 0% | 05-Feb-19 | 19-Mar-19 | 0 | $24,467 |
| JPLS Controls- Testing | 40 | 0% | 06-Mar-19 | 30-Apr-19 | 0 | $14,682 |
| JPLS- DAMA- Ready for Testing | 0 | 0% | | 19-Mar-19 | 82 | $0 |
| JPLS- DAMA- Testing | 30 | 0% | 20-Mar-19 | 30-Apr-19 | 0 | $24,467 |
| JPLS Controls and EPS Installation & Testing Complete | 0 | 0% | | 30-Apr-19 | 0 | $0 |
| JPLS Controls- Detector Integration | 20 | 0% | 17-Jun-19 | 15-Jul-19 | 0 | $6,117 |

- JPLS project began in July 2017 and is planned to be completed in July 2019, concluding with the integration of the detectors.
- Project currently funded through for Preliminary Design & Development (Phase 1), which concludes after the closeout of the PDR.
- Since CDR, project completion has been pushed from Feb 2019 to Jul 2019 to better align with NSLS-II budget constraints.

# Project Milestones

**Major Milestones**

| | |
|---|---|
| Conceptual Design Review (CDR) | Actual: October 4, 2017 |
| Preliminary Design Review (PDR) | Actual: February 12, 2018 |
| Final Design Review (FDR) | Planned: June 20, 2018 |
| DAMA Testing Complete | Planned: April 30, 2019 |
| End station installation & testing complete | Planned: April 30, 2019 |
| Ready for Experimental Safety Review (ESR) | Planned: April 30, 2019 |
| Receive 1M and 60K Detectors | Planned: June 14, 2019 |
| Install & Integrator Detectors | Planned: July 15, 2019 |

**Short term schedule**

| | |
|---|---|
| Begin final design & development | Planned: Feb 13 - Jun 20, 2018 |
| Begin procurement of granite and slides | Planned: Mar 7- Jun 27, 2018 |

# Project Critical Path

| Activity | Dur | Start | Finish |
|---|---|---|---|
| JPLS Mechanical - Design & Development - Initial | 144 | 14-Jul-17 A | 12-Feb-18 |
| JPLS Preliminary Design Review (PDR) | 0 | | 12-Feb-18 |
| JPLS PDR Post Review and report | 15 | 13-Feb-18 | 06-Mar-18 |
| JPLS Controls- Design and Development | 20 | 03-Apr-18 | 30-Apr-18 |
| JPLS Mechancial - Design & Development - Final | 90 | 13-Feb-18 | 20-Jun-18 |
| JPLS Final Design Review (FDR) | 0 | | 20-Jun-18 |
| JPLS Mechanical - Procurement - Granite Tables | 80 | 07-Mar-18 | 27-Jun-18 |
| JPLS Mechanical - Procurement - Slides and Screws | 80 | 07-Mar-18 | 27-Jun-18 |
| JPLS Controls- Procurement and Materials | 30 | 05-Oct-18 | 19-Nov-18 |
| JPLS Controls- Procurement Complete | 0 | | 19-Nov-18 |
| JPLS Controls- Installation | 30 | 20-Nov-18 | 04-Jan-19 |
| JPLS Controls- Motion and Diagnostics Integration | 40 | 07-Jan-19 | 05-Mar-19 |
| JPLS- DAMA- Installation and Integration | 30 | 05-Feb-19 | 19-Mar-19 |
| JPLS Mechanical - Assembly & Installation | 189 | 28-Jun-18 | 02-Apr-19 |
| JPLS Instrument Complete (Ready for ESR) | 0 | | 30-Apr-19 |
| JPLS ESR Complete | 0 | | 30-Apr-19* |
| JPLS - EPS - Installation & Testing | 40 | 06-Mar-19 | 30-Apr-19 |
| JPLS Controls- Testing | 40 | 06-Mar-19 | 30-Apr-19 |
| JPLS- DAMA- Testing | 30 | 20-Mar-19 | 30-Apr-19 |
| JPLS Controls and EPS Installation & Testing Complete | 0 | | 30-Apr-19 |
| JPLS Mechanical - Testing | 20 | 03-Apr-19 | 30-Apr-19 |
| JPLS Mechanical - Assembly, Installation and Testing Complete | 0 | | 30-Apr-19 |
| JPLS Mechanical - Procurement of Pilatus 1M detector | 175 | 02-Oct-18 | 14-Jun-19 |
| JPLS Mechanical - Procurement of Lambda 256K detector | 175 | 02-Oct-18 | 14-Jun-19 |
| JPLS Controls- Detector Integration | 20 | 17-Jun-19 | 15-Jul-19 |

# Labor Summary

## Total Project Cost: $1.91M

### Labor Summary

- Labor Cost: $930k fully burdened
- Staffing = 2.9 FTE total
  - Scientists: 0.9 FTE
  - Project Support: 0.4 FTE
  - Engineering and Design: 0.4 FTE
  - Controls: 0.3 FTE
  - DAMA: 0.3 FTE
  - Technician Support: 0.5 FTE
  - Other Support (Trades): 0.1 FTE

- Total project labor increased by $140k since CDR because some labor has shifted to occur in FY 2019, which has a higher burden rate vs. FY 2018 (70% vs. 58%)
  - Some labor has shifted from FY 2018 to FY 2019, primarily driven by Controls installation & DAMA activities being adjusted to occur during and after the installation of the end station equipment.

# Materials & Procurements Summary

## Total Project Cost: $1.91M

### M&S Summary

- M&S Cost: $983k fully burdened
- Major procurements
  - Pilatus 1M detector: $529k
  - Lambda 60k detector: $28k
  - Two Granite Tables: $42k
  - Slides & Screws: $29k
  - Silicon Drift Detector: $23k
  - Visualization hardware: $11k
  - Vibration Isolation: $13k
  - Other end station hardware: $192k
  - Controls & EPS hardware: $87k
  - Control Station: $23k
- Basis of Estimates
  - Material estimates based similar designs with known historical costs from previous projects and scaled to meet JPLS requirements.
  - Estimates were developed with input from experienced Engineers and CAMs that have come from other projects at NSLS-II (i.e. NSLS-II Project, ABBIX, NEXT, BDN).
  - Vendor quotes obtained for several items, such as granite, slides & screws, and vibration isolation.

# Recent M&S Cost Increases

- Total M&S cost has increased by project labor increased by from $680k to $983k since the CDR was held in October 2017. The most significant items to impact total cost are as follows:

| Item | CDR Cost | PDR Cost | Reason |
|---|---|---|---|
| Pilatus 1M detector | $312k | $529k | Faster data acquisition vs. previously costed version |
| Lambda 60k detector | n/a | $28k | Added to scope after CDR |
| 2 Granite Tables | $23k | $41k | Initial estimate too low. Received vendor quote |
| Machining of parts | $38k | $65k | Revised estimates based on new scope and previous similar work |

- Some cost mitigation has been realized by delaying acquisition of some non-essential items such as vibration isolation, the fluorescence detector, and visualization hardware until FY 2019.
  - The burden rate in FY2019 is reduced to 14% (vs. 54% this FY)

# Responses to CDR Recommendations

| Rec | Description | Status | Response |
|---|---|---|---|
| R12 | The schedule is tight; shift PDR to a later date. | Closed | The PDR will be shifted from Dec 2017 to Feb 2018 to allow for a more complete design at the review. |
| R14 | Allow for some time between PDR and procurement of custom components, such as slides, ball screws and granite. | Closed | We have scheduled 3 additional weeks after the PDR to prepare to procure these items. |
| R15 | Ensure that the dependencies of the individual activities are properly captured in the schedule. | Closed | We have adjusted the schedule to reflect this. |
| R17 | Consider purchasing the 'nice to have, but not essential' items later in the project, after some risks, such as performance of old equipment and uncertainties about the design, are retired. Such items are: fluorescence detector [available in the equipment pool; with 30% of user time for JPLS and assuming 50% of GUPs needs this detector -> ~6 weeks/year]; controls station furniture and partitions [can share space with SMI to start]. | Closed | Schedule adjustments have been made to delay acquisition of some non-essential items such as vibration isolation, fluorescence detector, and visualization hardware. These items are not needed at the start of commissioning. Control station procurements will be necessary to acquire and begin to build it up early, so that components for the JPLS end station can be tested as they arrive, without impacting the ongoing user and staff activities of the existing SMI station. |

# Conclusions

- Project schedule has been pushed out by approximately 5 months to better align with the constraints of the NSLS-II Operating budget.
- Project cost has increased by $440k. This is largely driven by the updated Pilatus 1M detector, the new Lambda 60k detector, and refined estimates of other procurements.
- Project cost has been well informed by experienced staff, vendor quotes, and previous projects