NSLS II 23-ID CSX Beam Line End Station Holography Chamber PPS Certification Validation Check List
G. Ganetis 8/27/2018

Beam Line __ID-23 CSX _ End Station - Holography Chamber _____

The following check list represents the documents and tasks that summarize the review the evaluator has done for a NSLS II Beam Line Personal Protection System:

Document or Task	**Reviewed**	**Comments**
Beam Line Logic Diagram	LT-EL-BL-EI-PPS-1230-93_REV-D	
Front End Logic Diagram	LT-EL-BL-EI-PPS-0101-92_REV-G	
Electrical Schematics First Optical Enclosure End Stations or AUX Water Flow Trip Amplifiers Front End –Network/ System Front End-SR 23 I/O Box	 LT-EL-BL-EI-PPS-1230-91_REV-F LT-EL-BL-EI-PPS-1230-90_REV-B LT-EL-BL-EI-PPS-1230-92_REV-B LT-EL-BL-EI-PPS-0101-90_REV-B LT-EL-BL-EI-PPS-0101-91_REV-B LT-EL-SR-EI-PPS-0223-90_REV-M	
Partial Certification Test for the addition of the new PPS Vacuum switches on End Station.	NSLS-II Beamline 23-ID Radiological Interlock Test (Partial) 8.23.2018.pdf	
Design Description for Beam Lines and Front End PPS	PS-C-XFD-SPC-PPS-001	Copies available upon request)
Maintenance Procedures	PS-C-XFD-PRC-023	Copies available upon request)
Network Isolation Test Procedure	PS-C-XFD-PRC-022	Copies available upon request)
PPS Equipment Layout Drawing	LT-EL-BL-EI-HCH-1230_REV-C.pdf	
ECNs required during Certification using Small Change Procedure	None	

NSLS II 23-ID CSX Beam Line End Station Holography Chamber PPS Certification Validation Check List
G. Ganetis 8/27/2018

Deviation Reports on Installed system	None	
PPS PLC Software under Configuration Control 23ID Chain A PPS Front End P1 Program Stored 23ID Chain B PPS Front End P1 Program Stored 23-ID Chain A PPS Beamline Program Stored 23-ID Chain B PPS Beamline Program Stored	 LT-EL-BL-EI-PPS-0101-70_REV-D.pdf LT-EL-BL-EI-PPS-0101-80_REV-E.pdf LT-EL-BL-EI-PPS-1230-70_REV-F.pdf LT-EL-BL-EI-PPS-1230-71_REV-E.pdf	

Evaluator _____ _____ Date _____

Print Name Signature

REV	DESCRIPTION	DATE	BY	CHECKED	APP
A	INITIAL RELEASE	10/14/2016	SEJ	JM	SB
B	REVISED PER ECN LT-ECN-015-1129	1-31-15	CG	JM	SB
C	REVISED PER ECN LT-ECN-015-1259	8-8-15	CG	JM	SB
D	REVISED PER ECN LT-ECN-018-1874	12/12/2017	SEJ	JM	SB

23-ID FOE SEARCH LOGIC

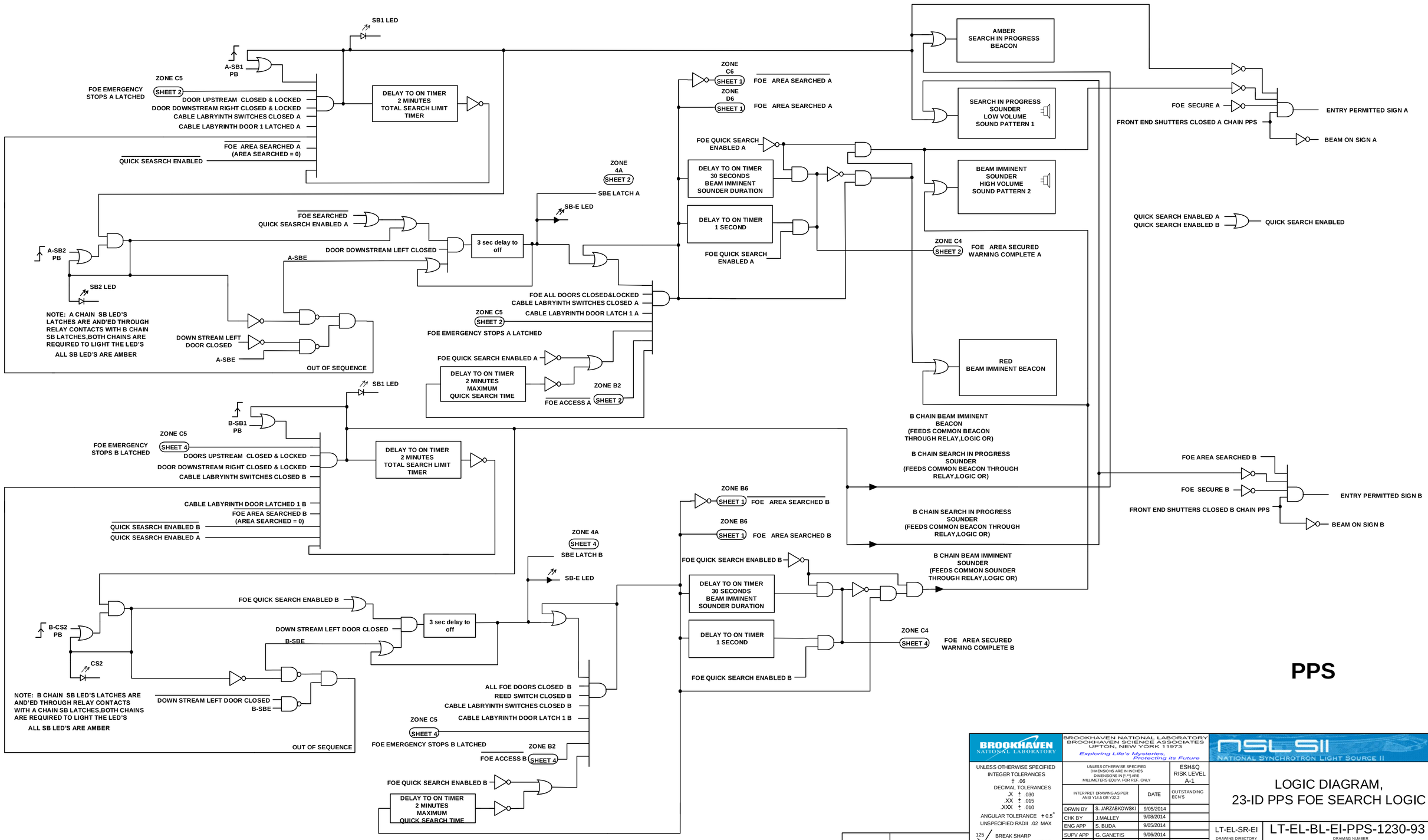

JOB NUMBER	USED ON DWG. NO.

BROOKHAVEN NATIONAL LABORATORY

BROOKHAVEN NATIONAL LABORATORY
BROOKHAVEN SCIENCE ASSOCIATES
UPTON, NEW YORK 11973
Exploring Life's Mysteries, Protecting its Future

NSLSII NATIONAL SYNCHROTRON LIGHT SOURCE II

UNLESS OTHERWISE SPECIFIED INTEGER TOLERANCES ± .06
DECIMAL TOLERANCES .X ± .030 .XX ± .015 .XXX ± .010
ANGULAR TOLERANCE ± 0.5°
UNSPECIFIED RADII .02 MAX
125 BREAK SHARP CORNERS AND EDGES
FINISH MAX .03 MIN .005

UNLESS OTHERWISE SPECIFIED DIMENSIONS ARE IN INCHES DIMENSIONS IN [ ] ARE MILLIMETERS EQUIV. FOR REF. ONLY

ESH&Q RISK LEVEL A-1

INTERPRET DRAWING AS PER ANSI Y14.5 OR Y32.2

		DATE	OUTSTANDING ECN'S
DRWN BY	S. JARZABKOWSKI	9/05/2014	
CHK BY	J.MALLEY	9/08/2014	
ENG APP	S. BUDA	9/05/2014	
SUPV APP	G. GANETIS	9/06/2014	
QA APP	E.CHESWICK	9/05/2014	
ESH APP	R. LEE	9/05/2014	

LOGIC DIAGRAM,
23-ID PPS FOE SEARCH LOGIC

LT-EL-SR-EI (DRAWING DIRECTORY) | LT-EL-BL-EI-PPS-1230-93 (DRAWING NUMBER) | D (REV)

COMPUTER REPRODUCABLE | SCALE: N/A | SHEET 1 OF 13

LT-EL-BL-EI-PPS-1230-93

REV	DESCRIPTION	DATE	BY	CHECKED	APP
	SEE SHEET 1				

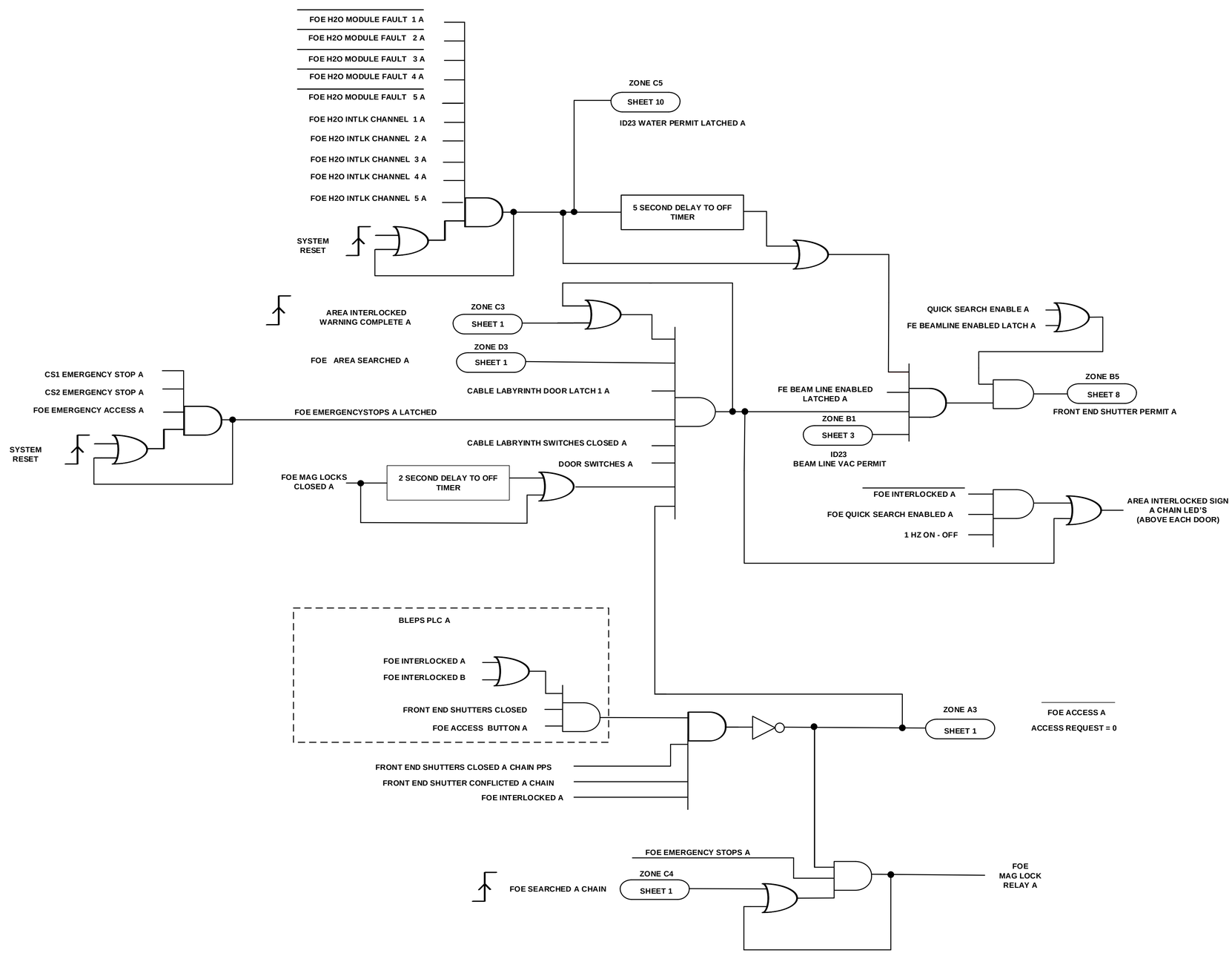

A

LT-EL-BL-EI	LT-EL-BL-EI-PPS-1230-93	D
DRAWING DIRECTORY	DRAWING NUMBER	REV

COMPUTER REPRODUCABLE | SCALE: N/A | SHEET 2 OF 13

LT-EL-BL-EI-PPS-1230-93

REV	DESCRIPTION	DATE	BY	CHECKED	APP
	SEE SHEET 1				

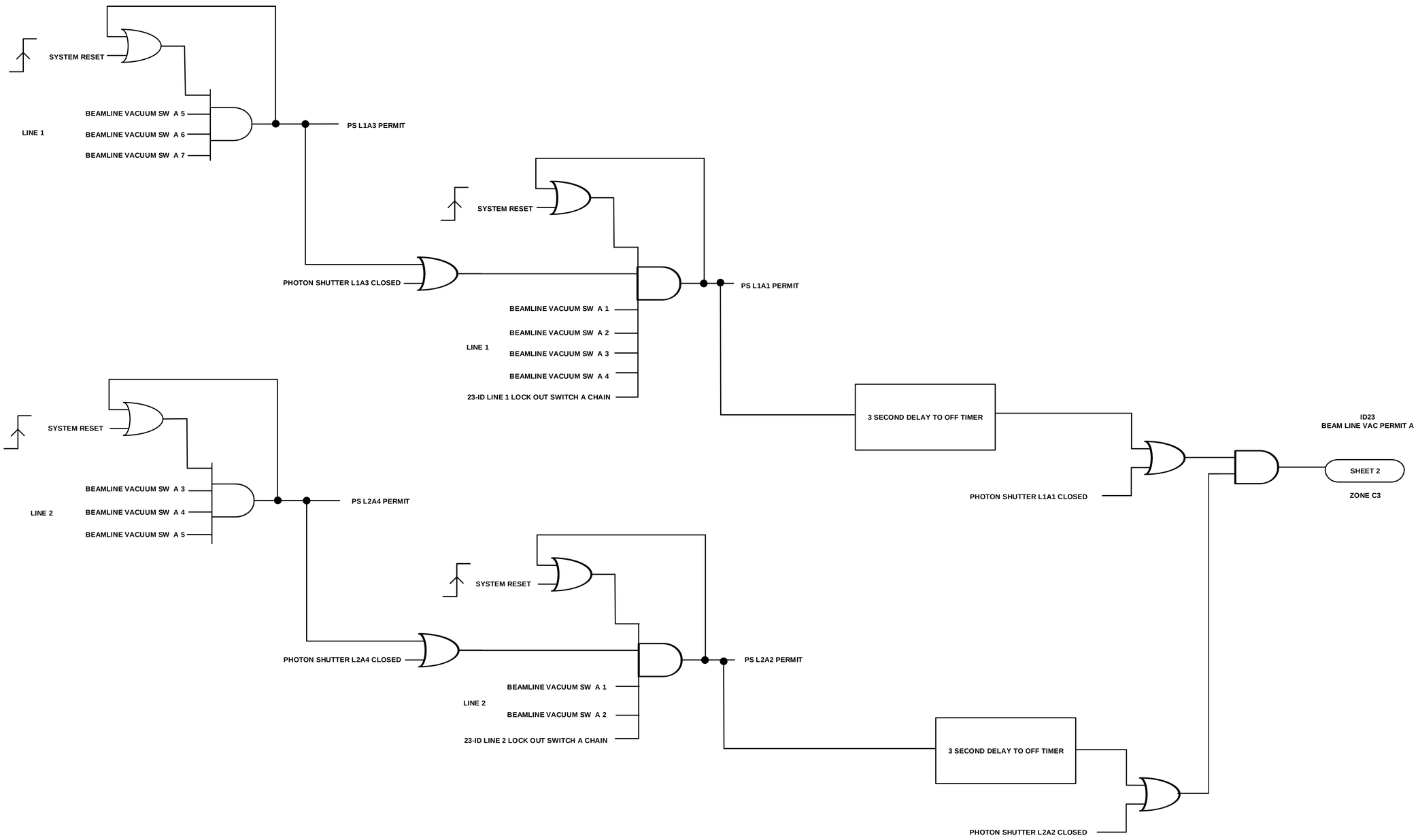

PPS
A

LT-EL-BL-EI-PPS-1230-93

LT-EL-BL-EI (DRAWING DIRECTORY)	LT-EL-BL-EI-PPS-1230-93 (DRAWING NUMBER)	D (REV)
COMPUTER REPRODUCABLE	SCALE: N/A	SHEET 3 OF 13

REV	DESCRIPTION	DATE	BY	CHECKED	APP
	SEE SHEET 1				

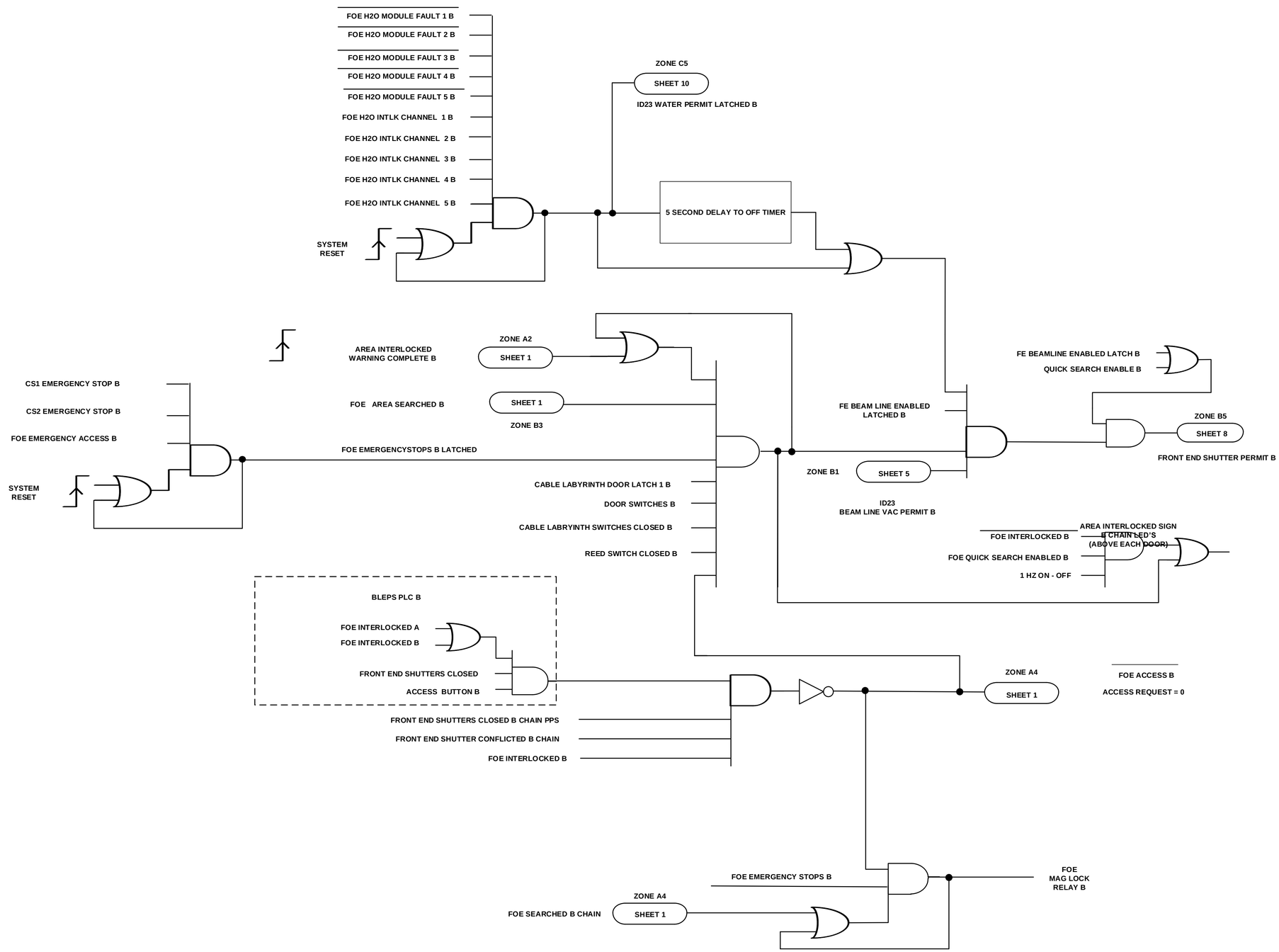

PPS
B

LT-EL-BL-EI (DRAWING DIRECTORY)	LT-EL-BL-EI-PPS-1230-93 (DRAWING NUMBER)	D (REV)
COMPUTER REPRODUCABLE	SCALE: N/A	SHEET 4 OF 13

LT-EL-BL-EI-PPS-1230-93

REV	DESCRIPTION	DATE	BY	CHECKED	APP
	SEE SHEET 1				

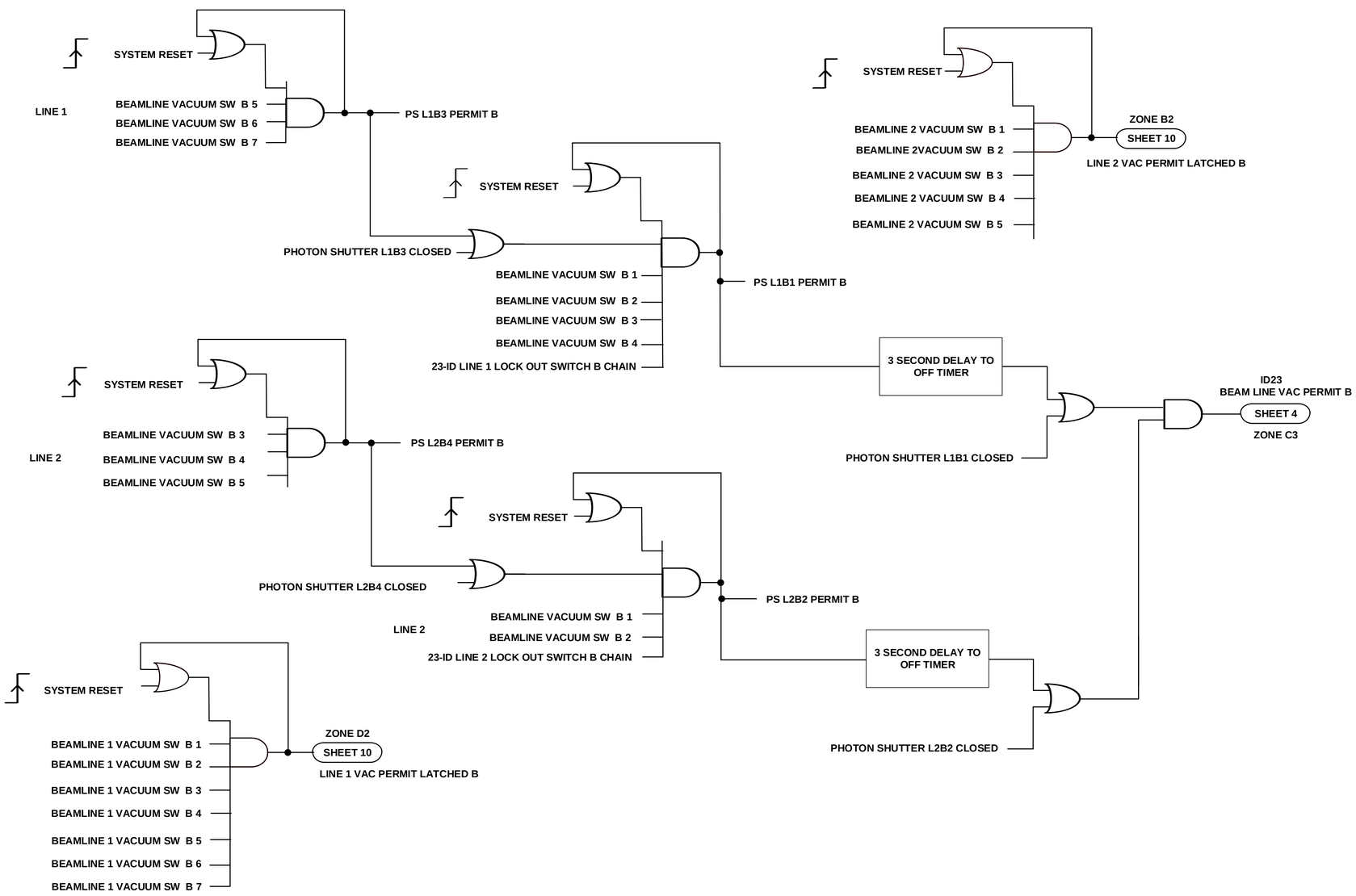

PPS
B

LT-EL-BL-EI-PPS-1230-93

LT-EL-BL-EI (DRAWING DIRECTORY)	LT-EL-BL-EI-PPS-1230-93 (DRAWING NUMBER)	D (REV)
COMPUTER REPRODUCABLE	SCALE: N/A	SHEET 5 OF 13

REV	DESCRIPTION	DATE	BY	CHECKED	APP
	SEE SHEET 1				

FAULTS AND ALARMS A CHAIN

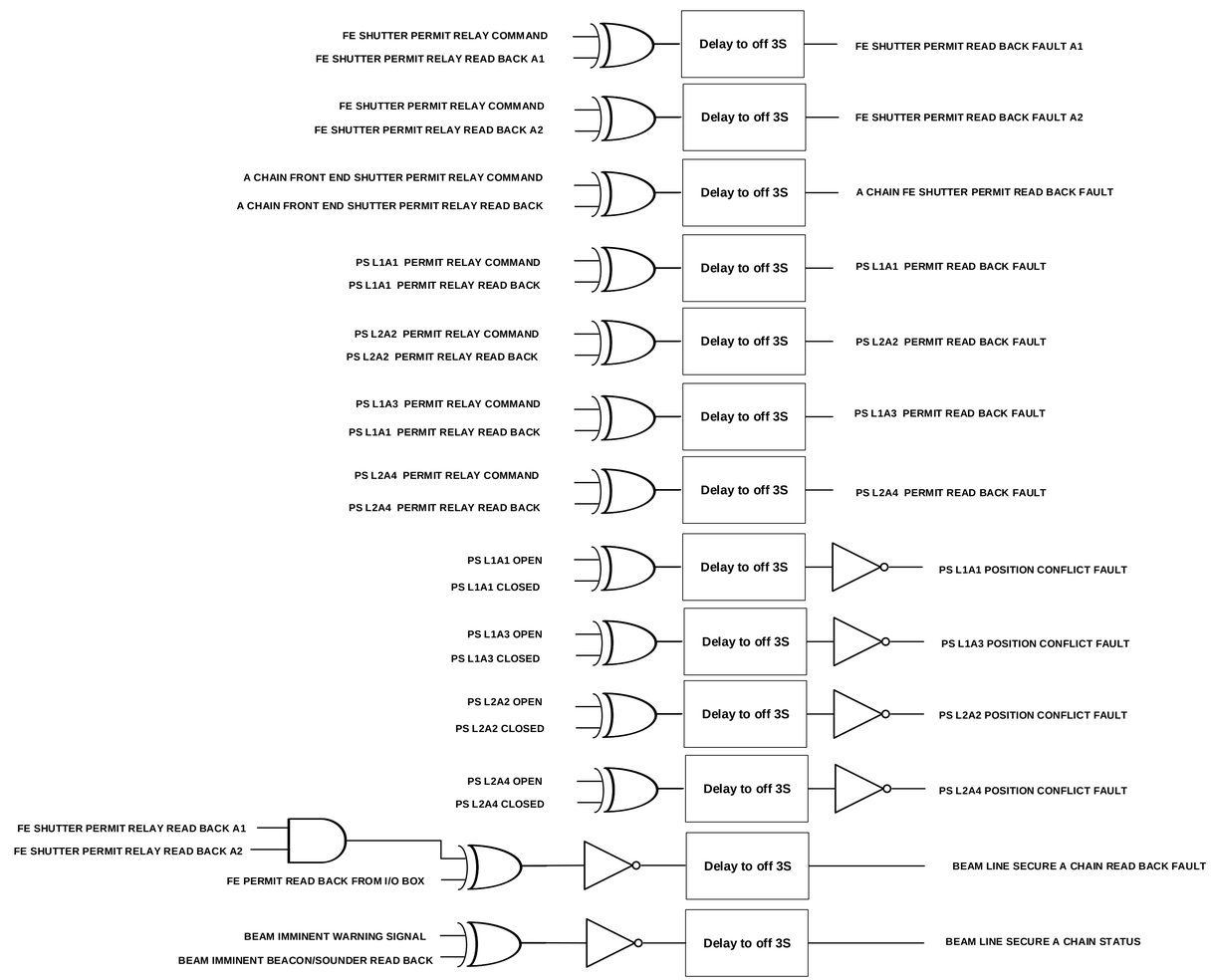

A CHAIN PROXIMITY SENSOR FAULT = DIRECT FROM SENSOR MODULE

A CHAIN HARDWARE FAULT = GENERATED FROM SYSTEM FAULT DATA

BEAMLINE FAULTS ARE SENT TO CONTROL ROOM ONLY WHEN BEAMLINE IS ENABLED AT FRONT END.

PPS

A

LT-EL-BL-EI (DRAWING DIRECTORY)	LT-EL-BL-EI-PPS-1230-93 (DRAWING NUMBER)	D (REV)
COMPUTER REPRODUCABLE	SCALE: N/A	SHEET 6 OF 13

LT-EL-BL-EI-PPS-1230-93

REV	DESCRIPTION	DATE	BY	CHECKED	APP
	SEE SHEET 1				

FAULTS AND ALARMS B CHAIN

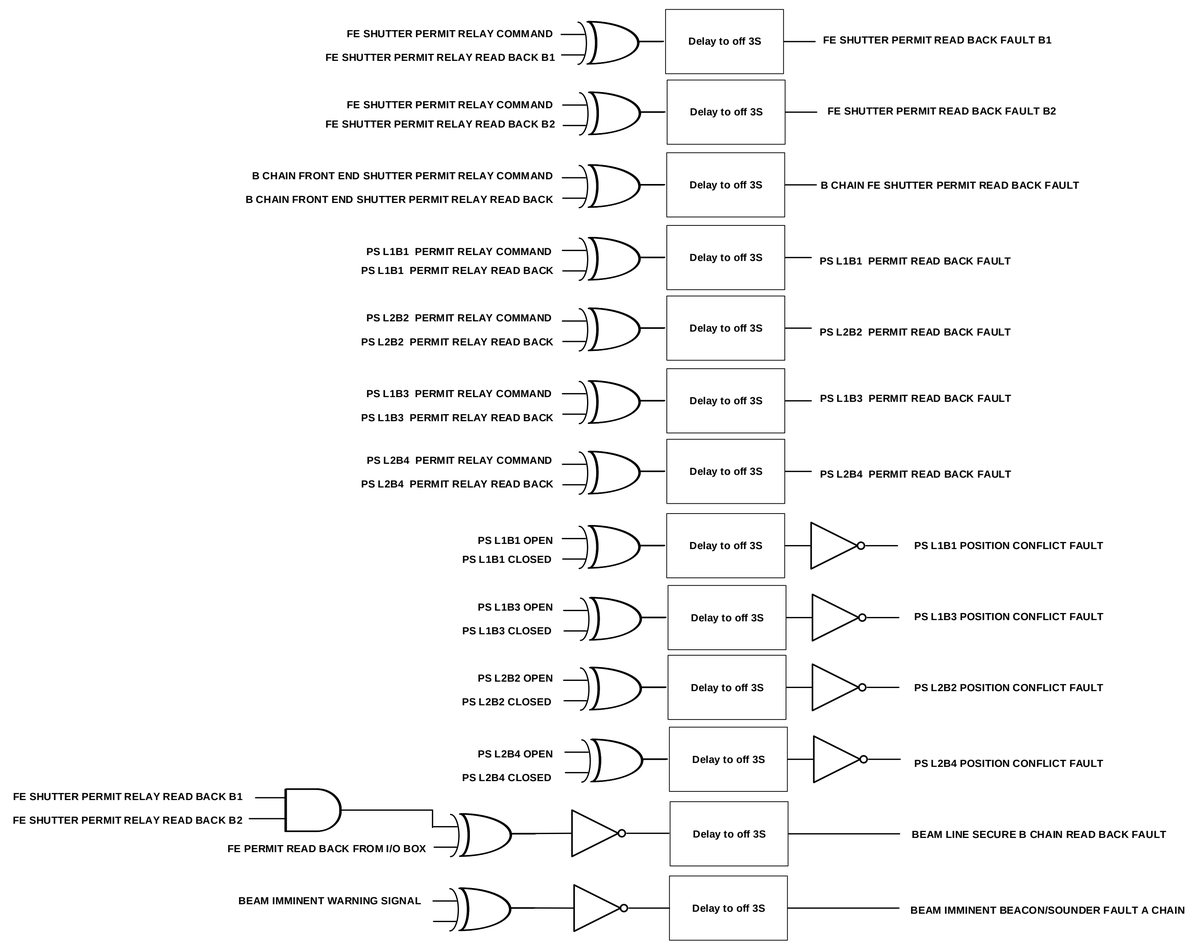

A CHAIN PROXIMITY SENSOR FAULT = DIRECT FROM SENSOR MODULE

A CHAIN HARDWARE FAULT = GENERATED FROM SYSTEM FAULT DATA

BEAMLINE FAULTS ARE SENT TO CONTROL ROOM ONLY WHEN BEAMLINE IS ENABLED AT FRONT END.

B

LT-EL-BL-EI (DRAWING DIRECTORY)	LT-EL-BL-EI-PPS-1230-93 (DRAWING NUMBER)	D (REV)
COMPUTER REPRODUCABLE	SCALE: N/A	SHEET 7 OF 13

LT-EL-BL-EI-PPS-1230-93

REV	DESCRIPTION	DATE	BY	CHECKED	APP
	SEE SHEET 1				

BLEPS DOOR CONTROL

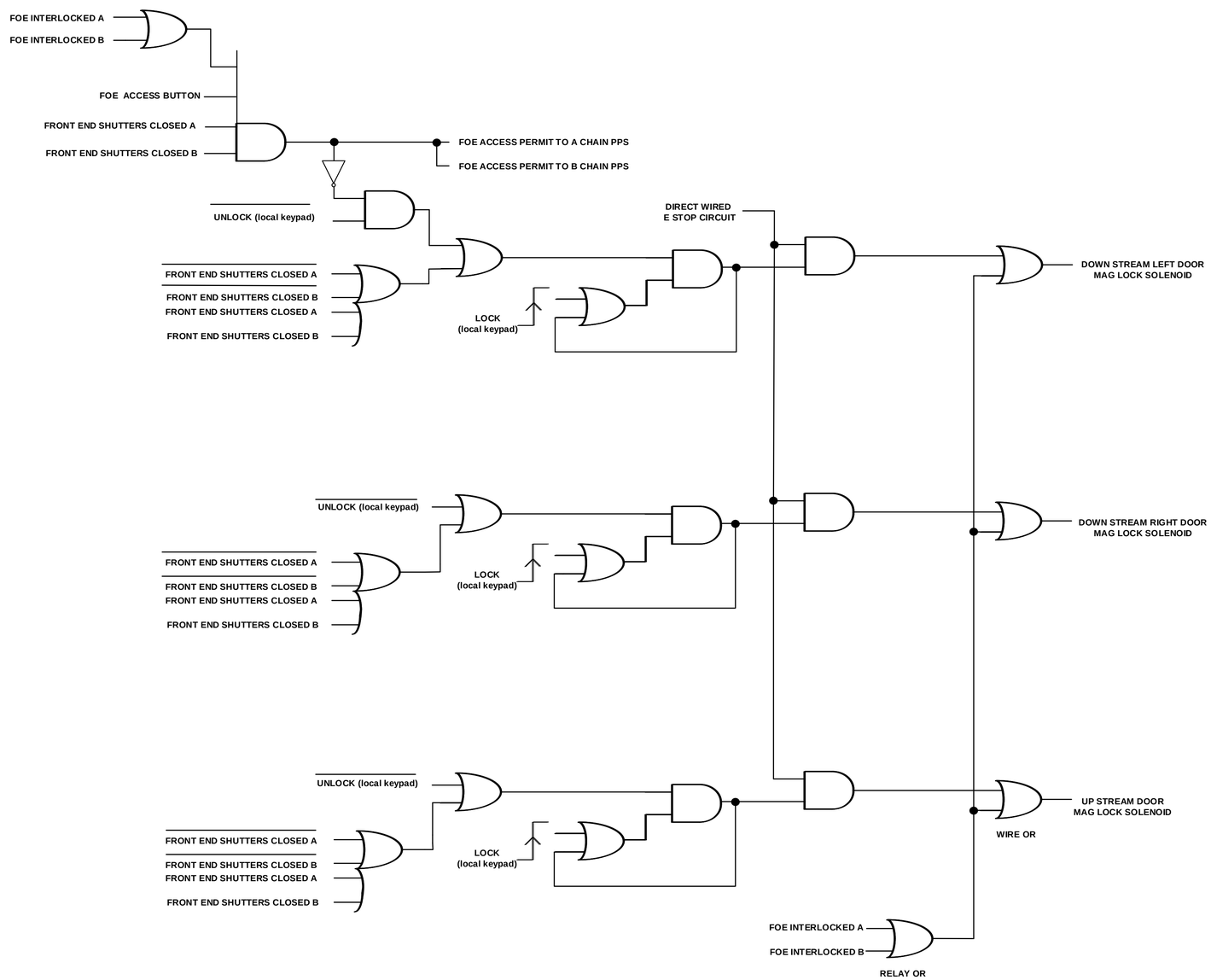

EPS

A

LT-EL-BL-EI	LT-EL-BL-EI-PPS-1230-93	D
DRAWING DIRECTORY	DRAWING NUMBER	REV

COMPUTER REPRODUCABLE | SCALE: N/A | SHEET 8 OF 13

LT-EL-BL-EI-PPS-1230-93

REV	DESCRIPTION	DATE	BY	CHECKED	APP
	SEE SHEET 1				

FOE DOOR LOCK CONTROL

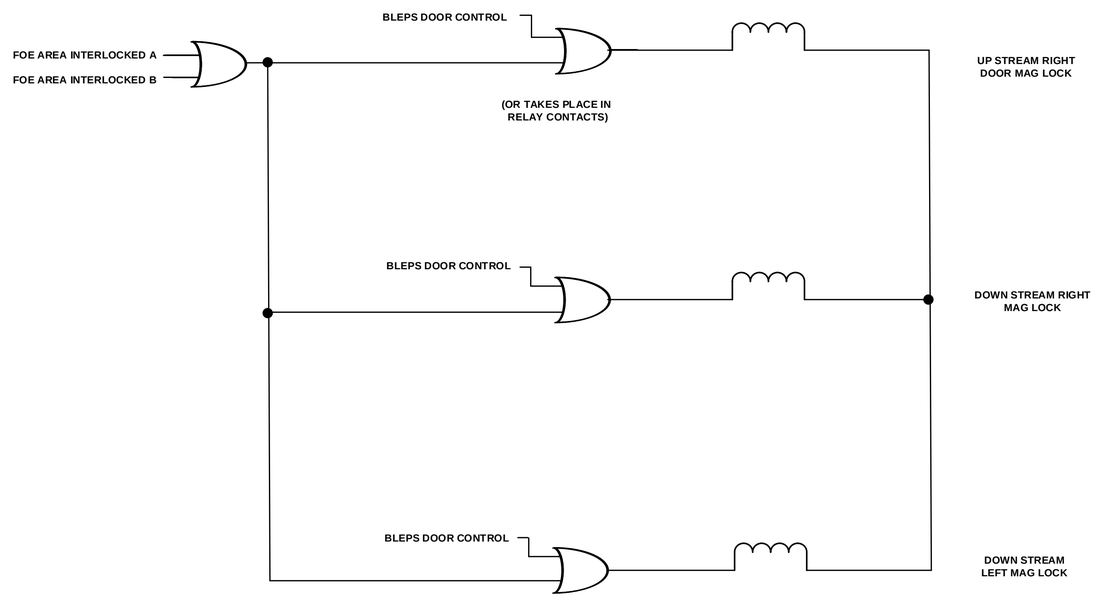

LT-EL-BL-EI-PPS-1230-93

LT-EL-BL-EI (DRAWING DIRECTORY)	LT-EL-BL-EI-PPS-1230-93 (DRAWING NUMBER)	D (REV)
COMPUTER REPRODUCABLE	SCALE: N/A	SHEET 9 OF 13

REV	DESCRIPTION	DATE	BY	CHECKED	APP
	SEE SHEET 1				

BLEPS SHUTTER CONTROL

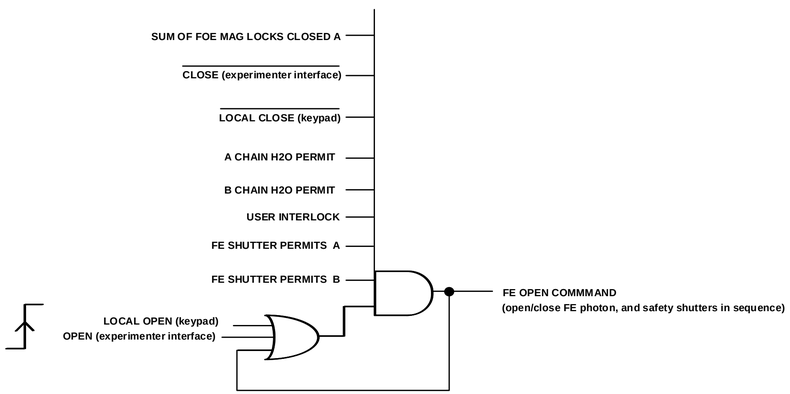

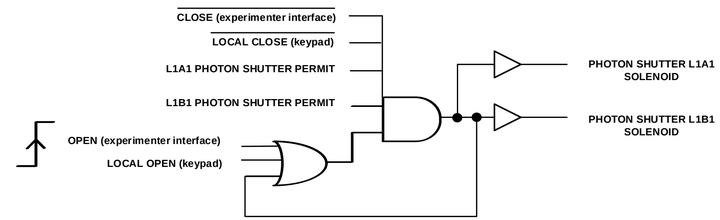

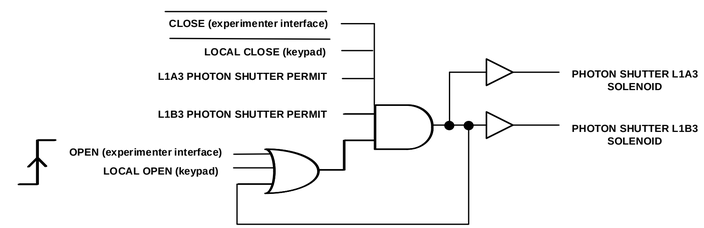

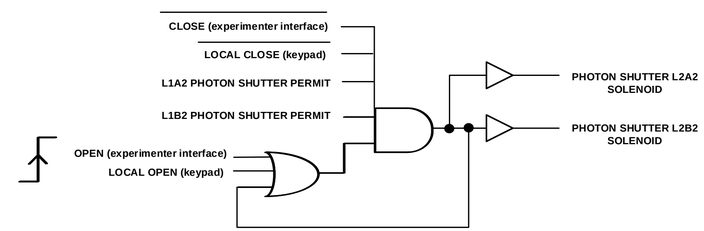

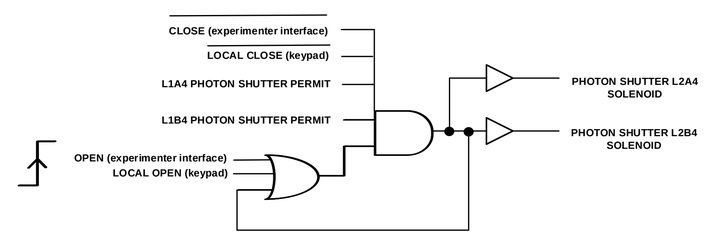

A

LT-EL-BL-EI (DRAWING DIRECTORY)	LT-EL-BL-EI-PPS-1230-93 (DRAWING NUMBER)	D (REV)
COMPUTER REPRODUCABLE	SCALE: N/A	SHEET 10 OF 13

LT-EL-BL-EI-PPS-1230-93

REV	DESCRIPTION	DATE	BY	CHECKED	APP
	SEE SHEET 1				

BLEPS SHUTTER CONTROL
A CHAIN SHUTTERS

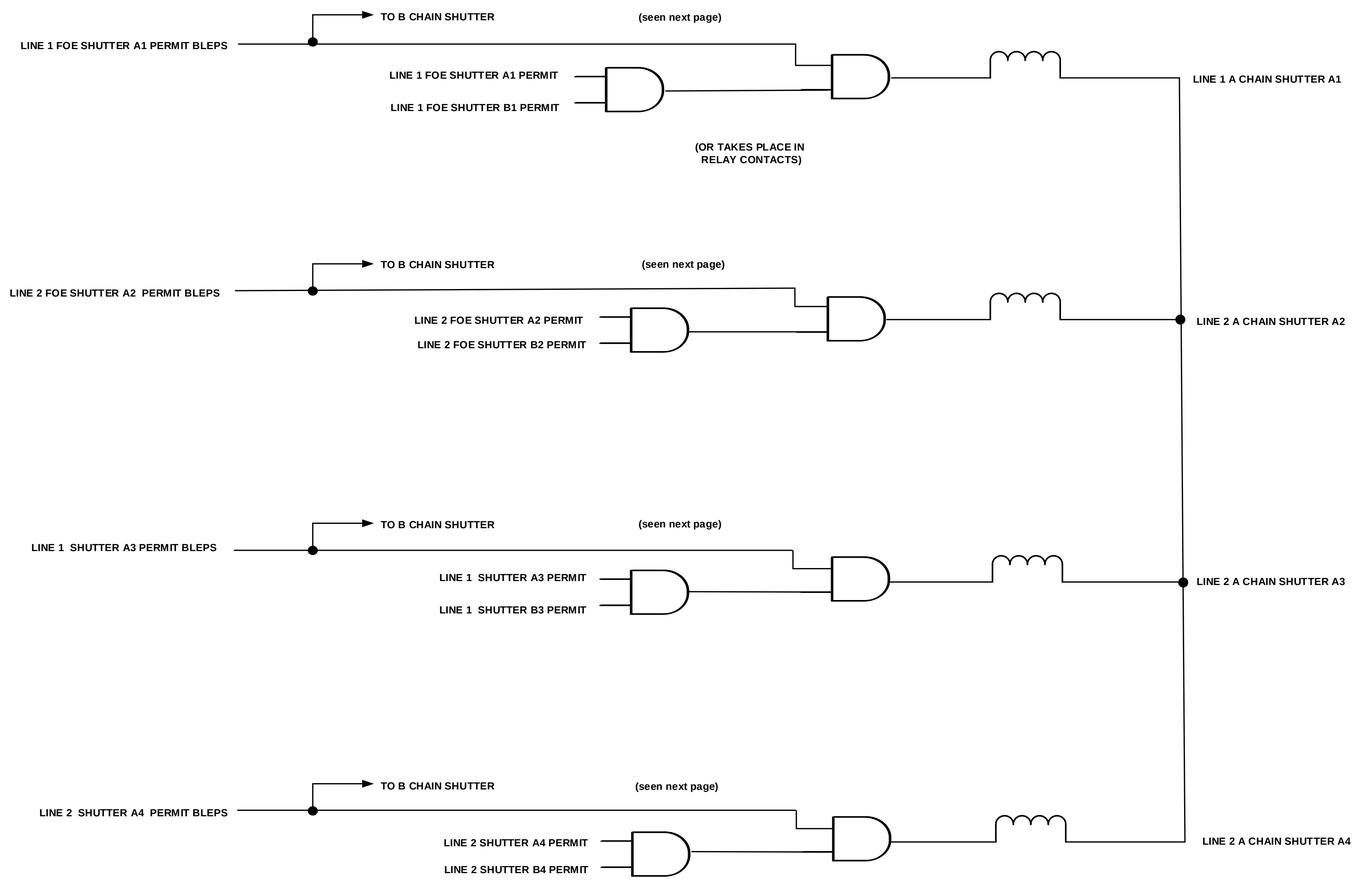

LT-EL-BL-EI-PPS-1230-93

LT-EL-BL-EI (DRAWING DIRECTORY)	LT-EL-BL-EI-PPS-1230-93 (DRAWING NUMBER)	D (REV)
COMPUTER REPRODUCABLE	SCALE: N/A	SHEET 11 OF 13

REV	DESCRIPTION	DATE	BY	CHECKED	APP
	SEE SHEET 1				

BLEPS SHUTTER CONTROL
B CHAIN SHUTTERS

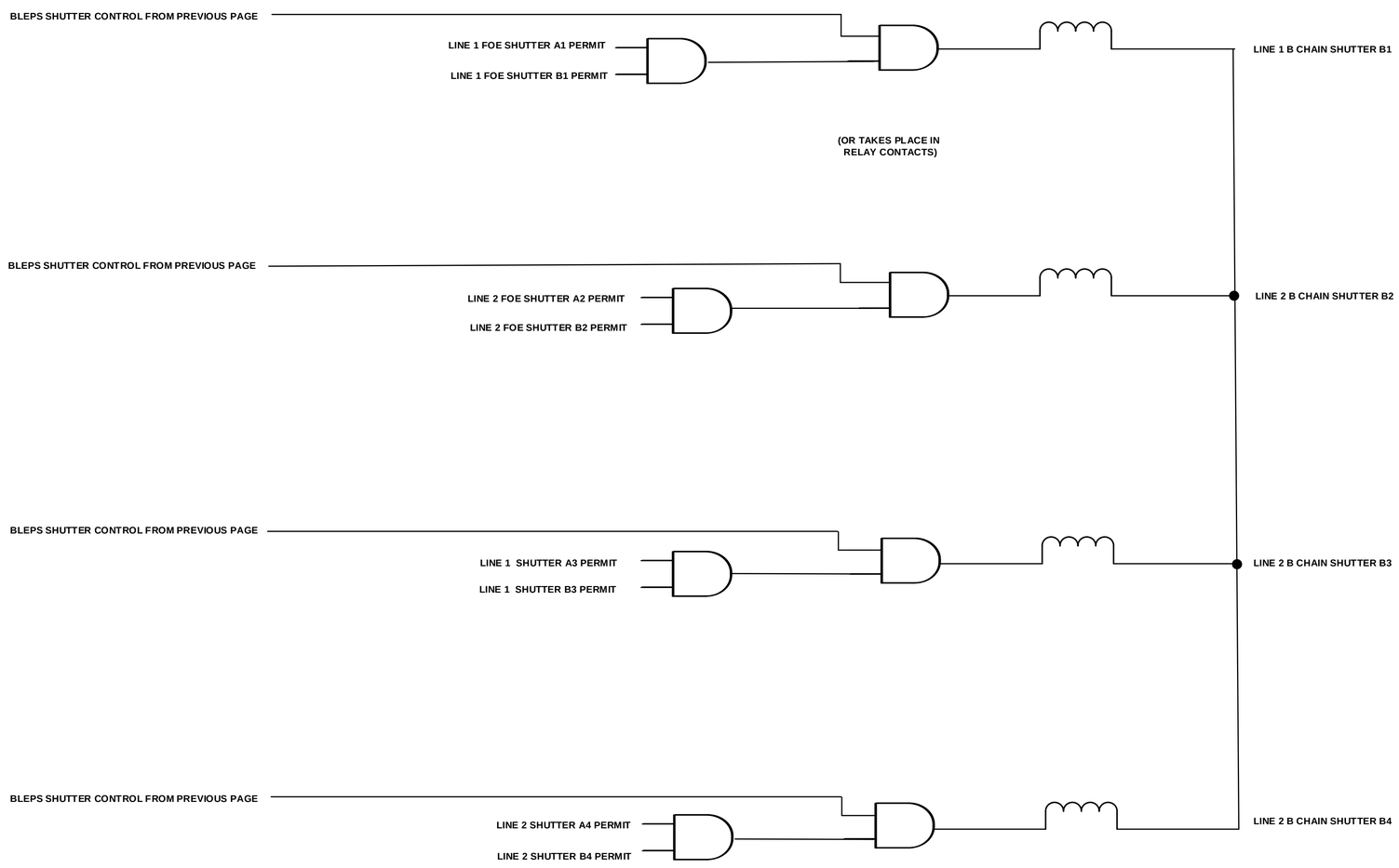

LT-EL-BL-EI-PPS-1230-93

LT-EL-BL-EI (DRAWING DIRECTORY)	LT-EL-BL-EI-PPS-1230-93 (DRAWING NUMBER)	D (REV)
COMPUTER REPRODUCABLE	SCALE: N/A	SHEET 12 OF 13

REV	DESCRIPTION	DATE	BY	CHECKED	APP
	SEE SHEET 1				

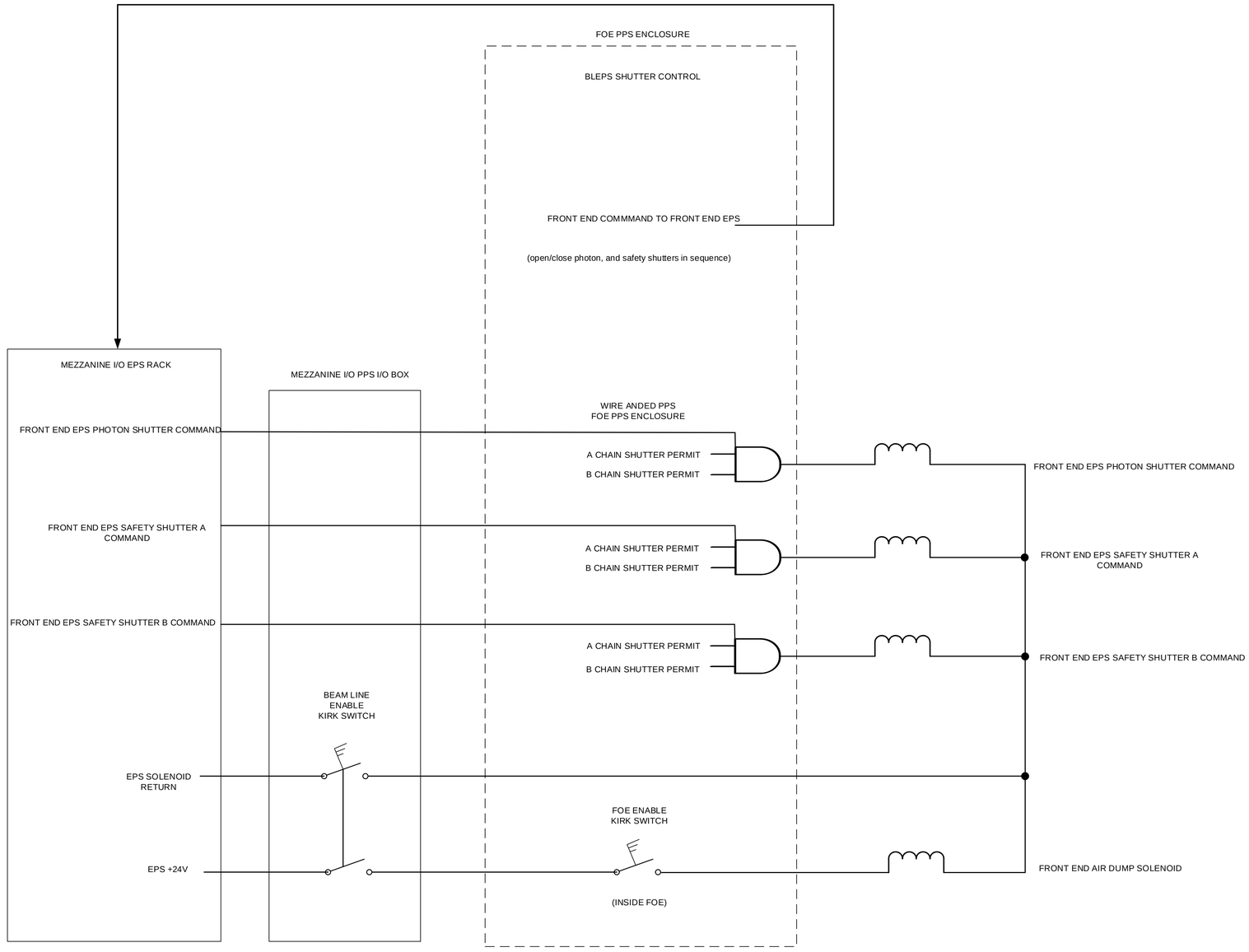

PPS
A

LT-EL-BL-EI-PPS-1230-93

LT-EL-BL-EI (DRAWING DIRECTORY)	LT-EL-BL-EI-PPS-1230-93 (DRAWING NUMBER)	D (REV)
COMPUTER REPRODUCABLE	SCALE: N/A	SHEET 13 OF 13

REV	DESCRIPTION	DATE	BY	CHECKED	APP
A	INITIAL RELEASE	9/08/2014	SEJ	JM	SB
B	REVISED PER ECN LT-ECN-015-1257	7-29-15	CG	JM	SB
C	REVISED PER ECN LT-ECN-016-1373	12/03/2016	SEJ	JM	SB
D	REVISED PER ECN LT-ECN-016-1493	12/03/2016	SEJ	JM	SB
E	REVISED PER ECN LT-ECN-016-1606	9/08/2016	SEJ	JM	SB
F	REVISED PER ECN LT-ECN-017-1728	12/14/2016	SEJ	JM	SB
G	REVISED PER ECN LT-ECN-017-1840	08/29/2017	SEJ	JM	SB

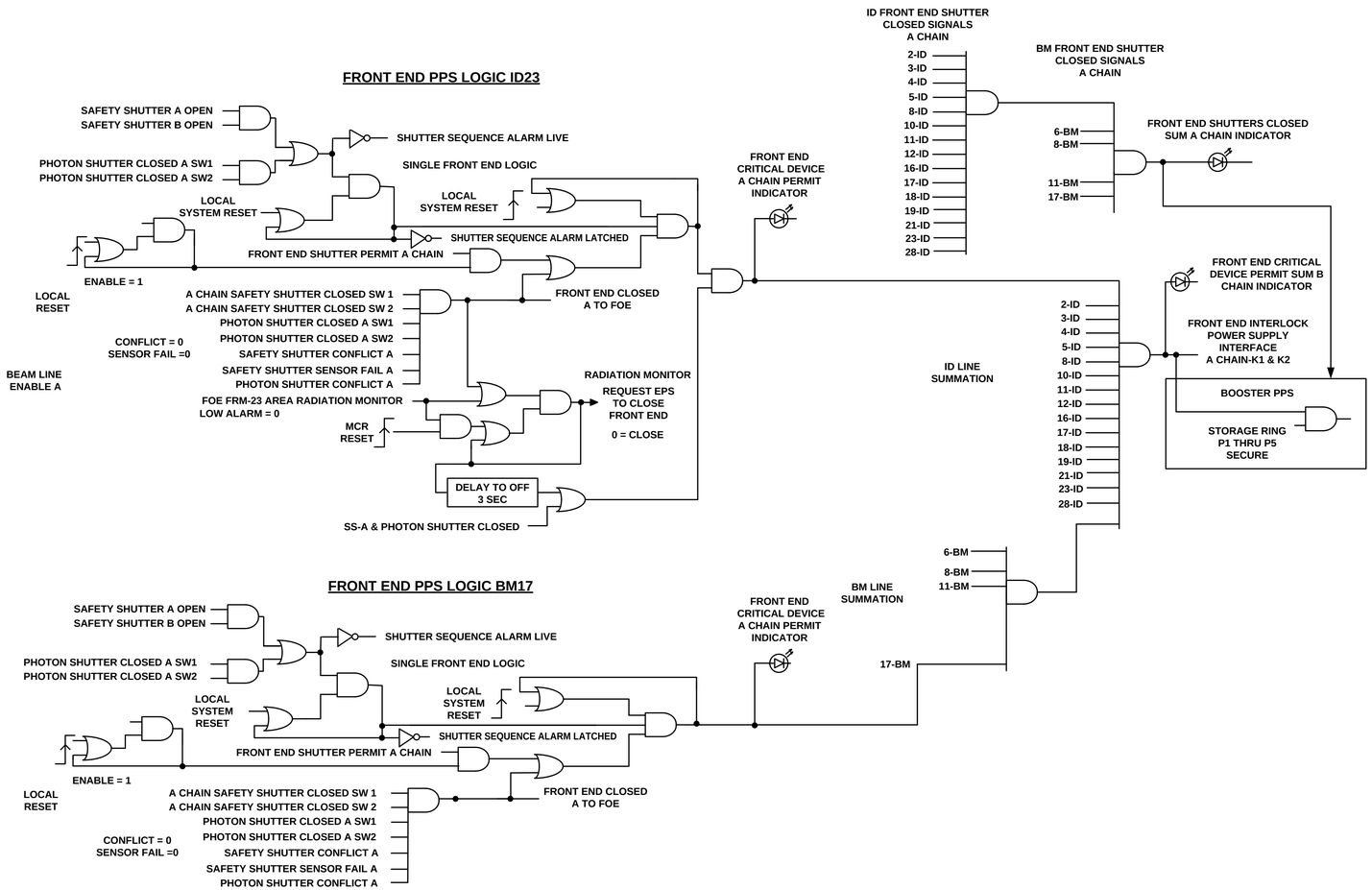

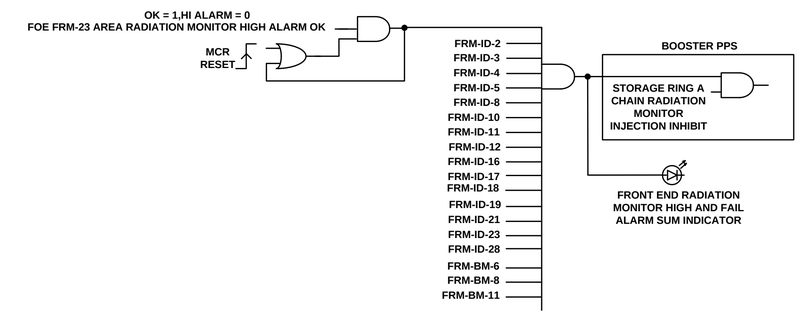

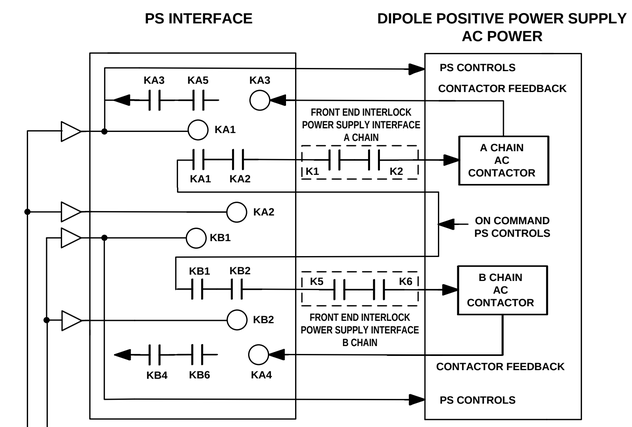

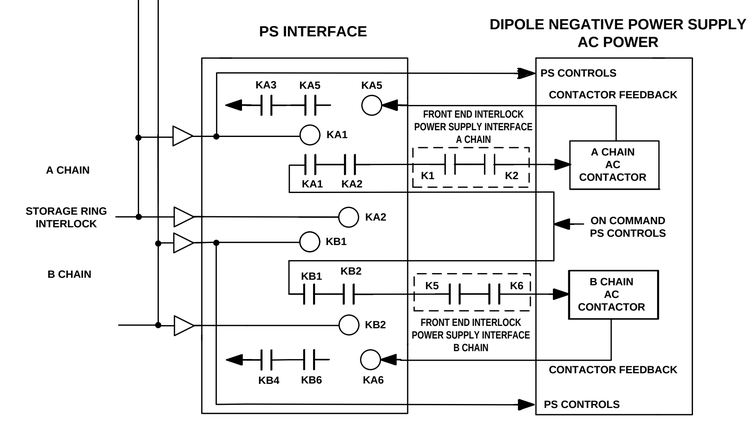

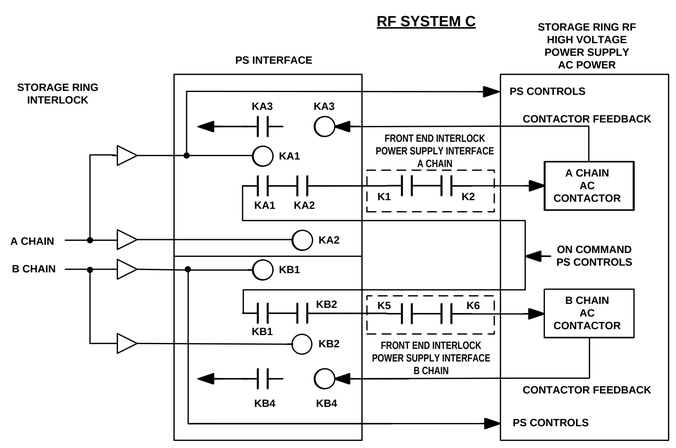

FULL NSLS2 DESIGN HAS UP TO 4 RF SYSTEMS (C SHOWN)

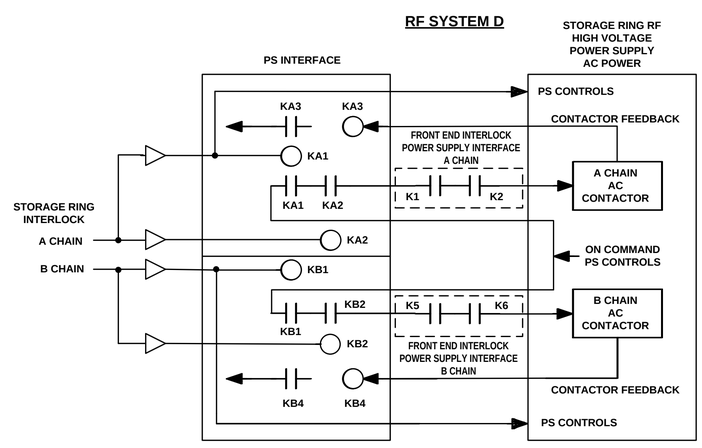

FULL NSLS2 DESIGN HAS UP TO 4 RF SYSTEMS (D SHOWN)

BROOKHAVEN NATIONAL LABORATORY

BROOKHAVEN NATIONAL LABORATORY
BROOKHAVEN SCIENCE ASSOCIATES
UPTON, NEW YORK 11973
Exploring Life's Mysteries, Protecting its Future

NSLSII NATIONAL SYNCHROTRON LIGHT SOURCE II

UNLESS OTHERWISE SPECIFIED
INTEGER TOLERANCES ± .06
DECIMAL TOLERANCES
.X ± .030
.XX ± .015
.XXX ± .010
ANGULAR TOLERANCE ± 0.5°
UNSPECIFIED RADII .02 MAX
125 FINISH — BREAK SHARP CORNERS AND EDGES
MAX .03 MIN .005

UNLESS OTHERWISE SPECIFIED DIMENSIONS ARE IN INCHES
DIMENSIONS IN [ ] ARE MILLIMETERS EQUIV. FOR REF. ONLY

ESH&Q RISK LEVEL A-1

INTERPRET DRAWING AS PER ANSI Y14.5 OR Y32.2

OUTSTANDING ECN'S

		DATE
DRWN BY	S. JARZABKOWSKI	9/08/2014
CHK BY	J. MALLEY	9/08/2014
ENG APP	S. BUDA	9/08/2014
SUPV APP	G. GANETIS	9/10/2014
QA APP	E. CHESWICK	9/08/2014
ESH APP	R. LEE	9/10/2014

WIRING DIAGRAM, FRONT END PPS SYSTEM LOGIC

DRAWING DIRECTORY: LT-EL-BL-EI
DRAWING NUMBER: LT-EL-BL-EI-PPS-0101-92
REV: G

WBS # 1.03.06.01.03
SCALE: N/A
SHEET 1 OF 3

JOB NUMBER
USED ON DWG. NO.

LT-EL-BL-EI-PPS-0101-92

REV	DESCRIPTION	DATE	BY	CHECKED	APP
	SEE SHEET 1				

FRONT END PPS LOGIC ID23

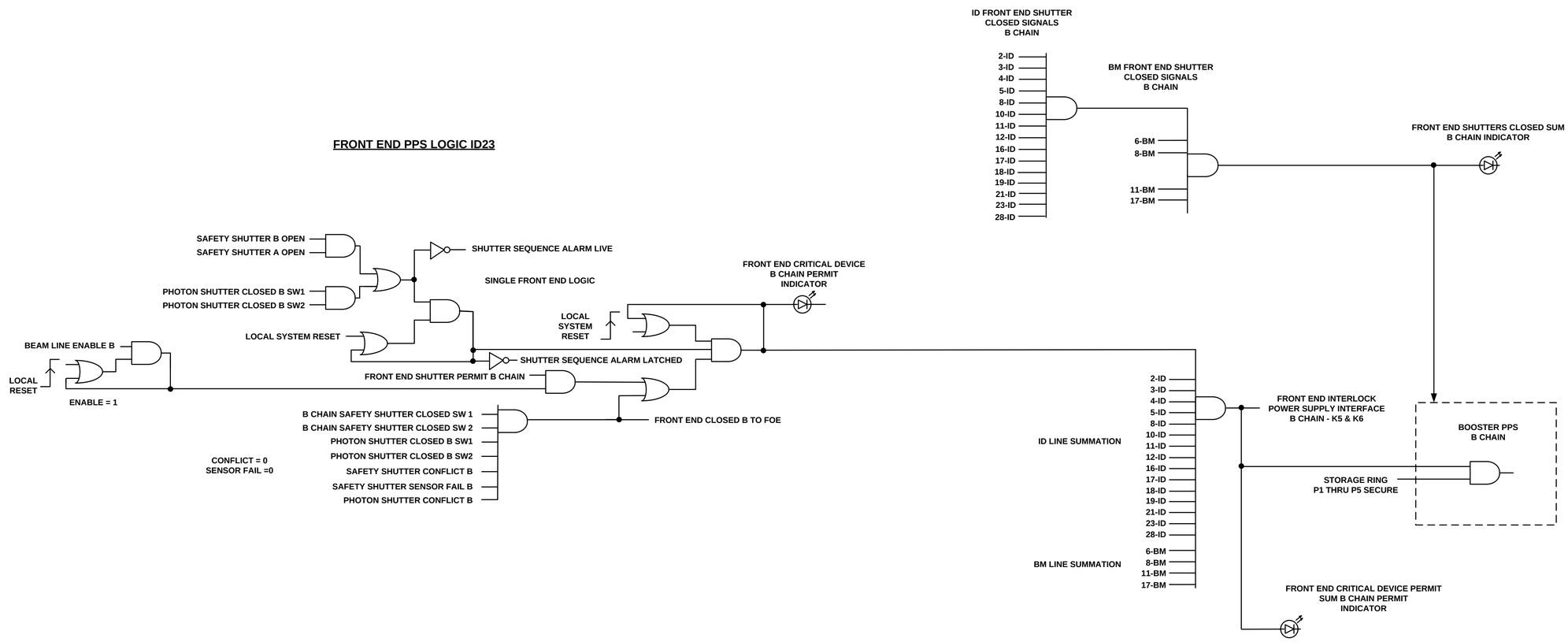

LT-EL-BL-EI	LT-EL-BL-EI-PPS-0101-92	G
DRAWING DIRECTORY	DRAWING NUMBER	REV
COMPUTER REPRODUCIBLE	SCALE: N/A	SHEET 2 OF 3

LT-EL-BL-EI-PPS-0101-92

REV	DESCRIPTION	DATE	BY	CHECKED	APP
	SEE SHEET 1				

A CHAIN

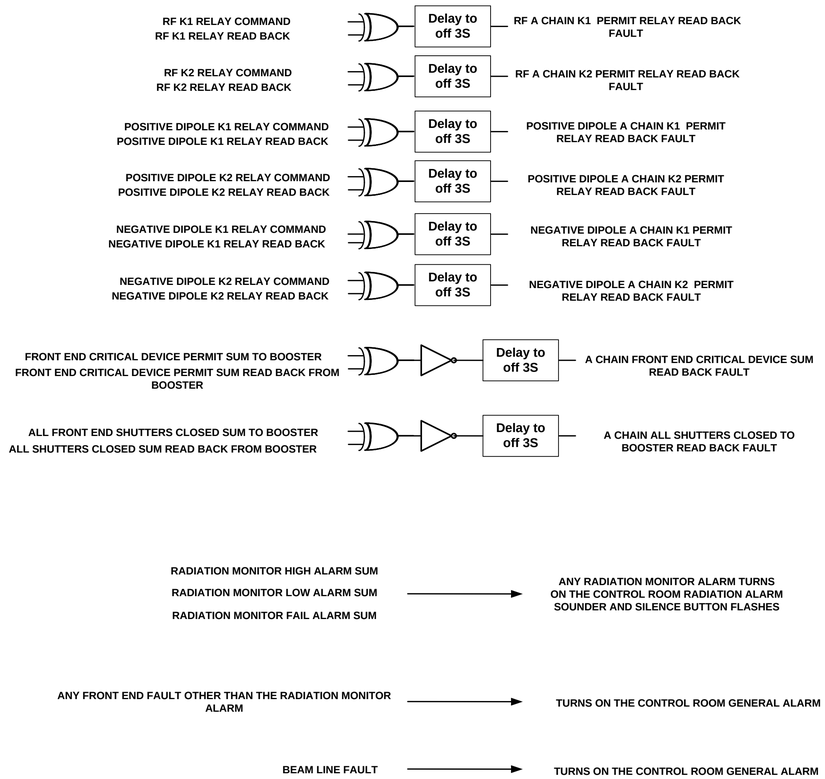

B CHAIN

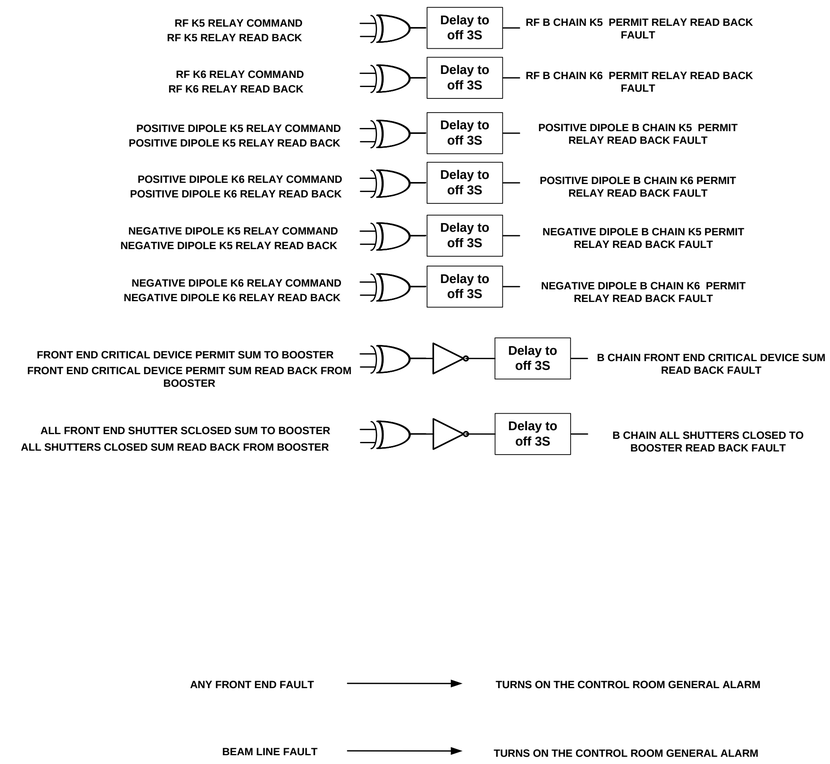

LT-EL-BL-EI-PPS-0101-92

LT-EL-BL-EI (DRAWING DIRECTORY)	LT-EL-BL-EI-PPS-0101-92 (DRAWING NUMBER)	G (REV)
COMPUTER REPRODUCIBLE	SCALE: N/A	SHEET 3 OF 3

REV	DESCRIPTION	DATE	BY	CHECKED	APP
A	INITIAL RELEASE	9/04/2014	SEJ	JM	SB
B	REVISED PER ECN LT-ECN-014-991	9/29/2014	SEJ	JM	SB
C	REVISED PER ECN LT-ECN-015-1015	10-21-14	CG	JM	SB
D	REVISED PER ECN LT-ECN-015-1101	12-22-14	SEJ	JM	SB
E	REVISED PER ECN LT-ECN-015-1277	3/1/2016	SEJ	JM	SB
F	REVISED PER ECN LT-ECN-018-1981	6/15/2018	SEJ	JM	SB

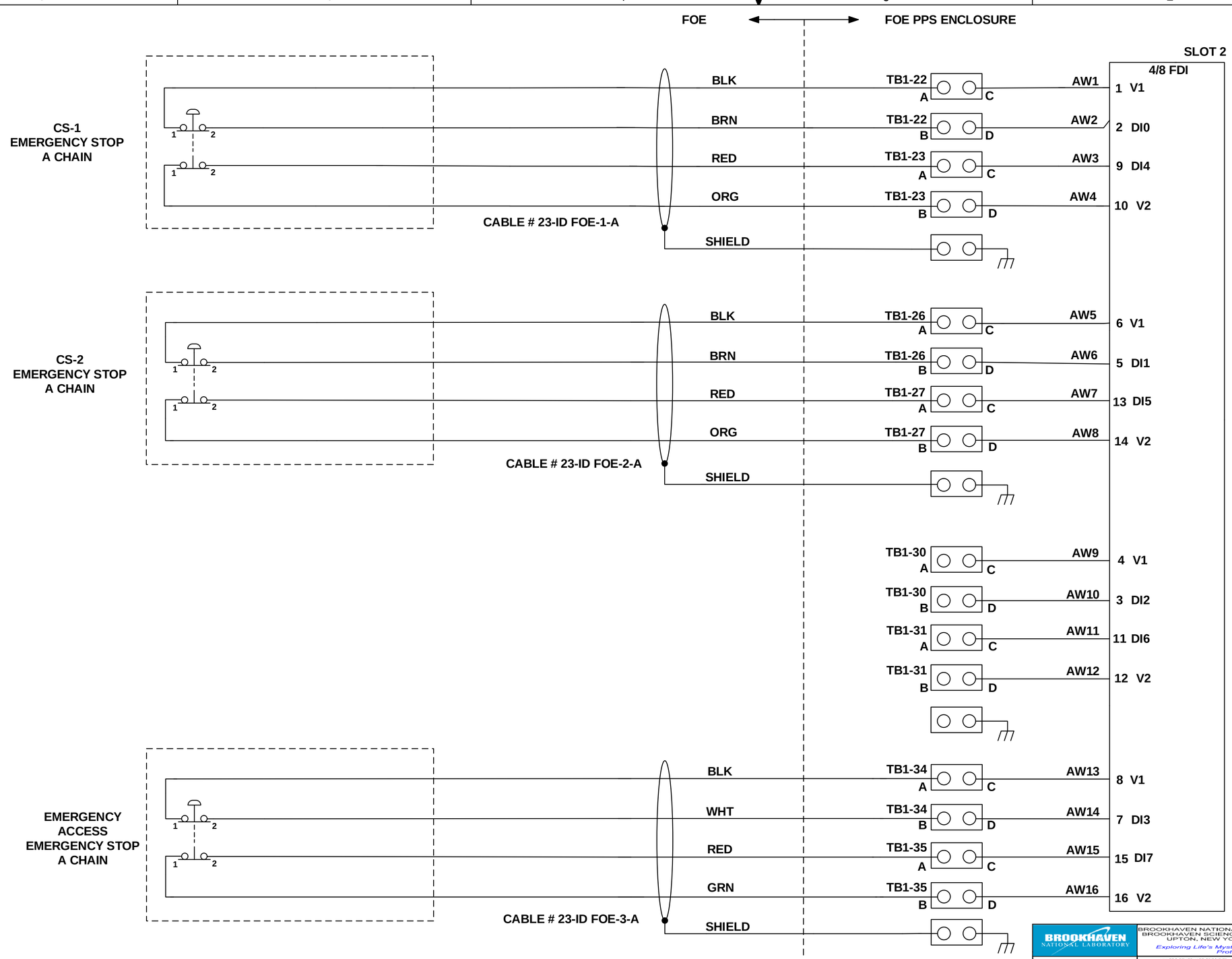

A

LT-EL-BL-EI-PPS-1230-91

BROOKHAVEN NATIONAL LABORATORY

BROOKHAVEN NATIONAL LABORATORY
BROOKHAVEN SCIENCE ASSOCIATES
UPTON, NEW YORK 11973
Exploring Life's Mysteries, Protecting its Future

NSLSII NATIONAL SYNCHROTRON LIGHT SOURCE II

UNLESS OTHERWISE SPECIFIED
INTEGER TOLERANCES ± .06
DECIMAL TOLERANCES
.X ± .030
.XX ± .015
.XXX ± .010
ANGULAR TOLERANCE ± 0.5°
UNSPECIFIED RADII .02 MAX
125 FINISH
BREAK SHARP CORNERS AND EDGES
MAX .03 MIN .005

UNLESS OTHERWISE SPECIFIED DIMENSIONS ARE IN INCHES DIMENSIONS IN [ ], **] ARE MILLIMETERS EQUIV. FOR REF. ONLY
INTERPRET DRAWING AS PER ANSI Y14.5 OR Y32.2

ESH&Q RISK LEVEL A-1

		DATE	OUTSTANDING ECNS
DRWN BY	S. JARZABKOWSKI	9/04/2014	
CHK BY	J. MALLEY	9/04/2014	
ENG APP	S. BUDA	9/04/2014	
SUPV APP	G. GANETIS	9/06/2014	
QA APP	E. CHESWICK	9/05/2014	
ESH APP	B. LEE	9/05/2014	

JOB NUMBER | USED ON DWG. NO.

WIRING DIAGRAM, 23-ID -FOE (CSX-FOE) A CHAIN AND B CHAIN

LT-EL-SR-PS (DRAWING DIRECTORY) | LT-EL-BL-EI-PPS-1230-91 (DRAWING NUMBER) | F (REV)

COMPUTER REPRODUCIBLE | SCALE : N/A | SHEET 1 OF 45

REV	DESCRIPTION	DATE	BY	CHECKED	APP
	SEE SHEET 1				

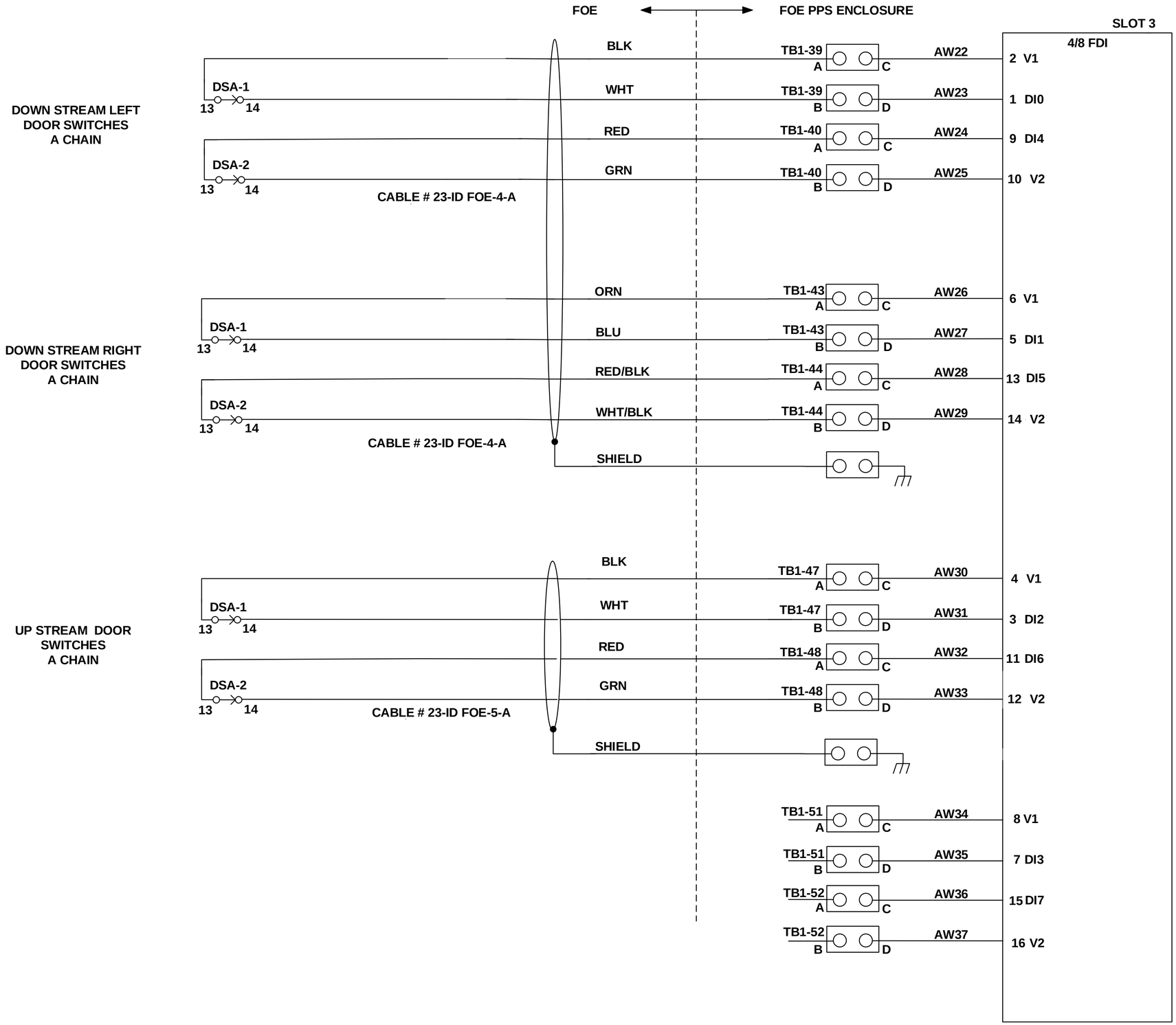

A

LT-EL-BL-EI-PPS-1230-91

LT-EL-BL-EI (DRAWING DIRECTORY)	LT-EL-BL-EI-PPS-1230-91 (DRAWING NUMBER)	F (REV)
COMPUTER REPRODUCIBLE	SCALE: N/A	SHEET 2 OF 45

REV	DESCRIPTION	DATE	BY	CHECKED	APP
	SEE SHEET 1				

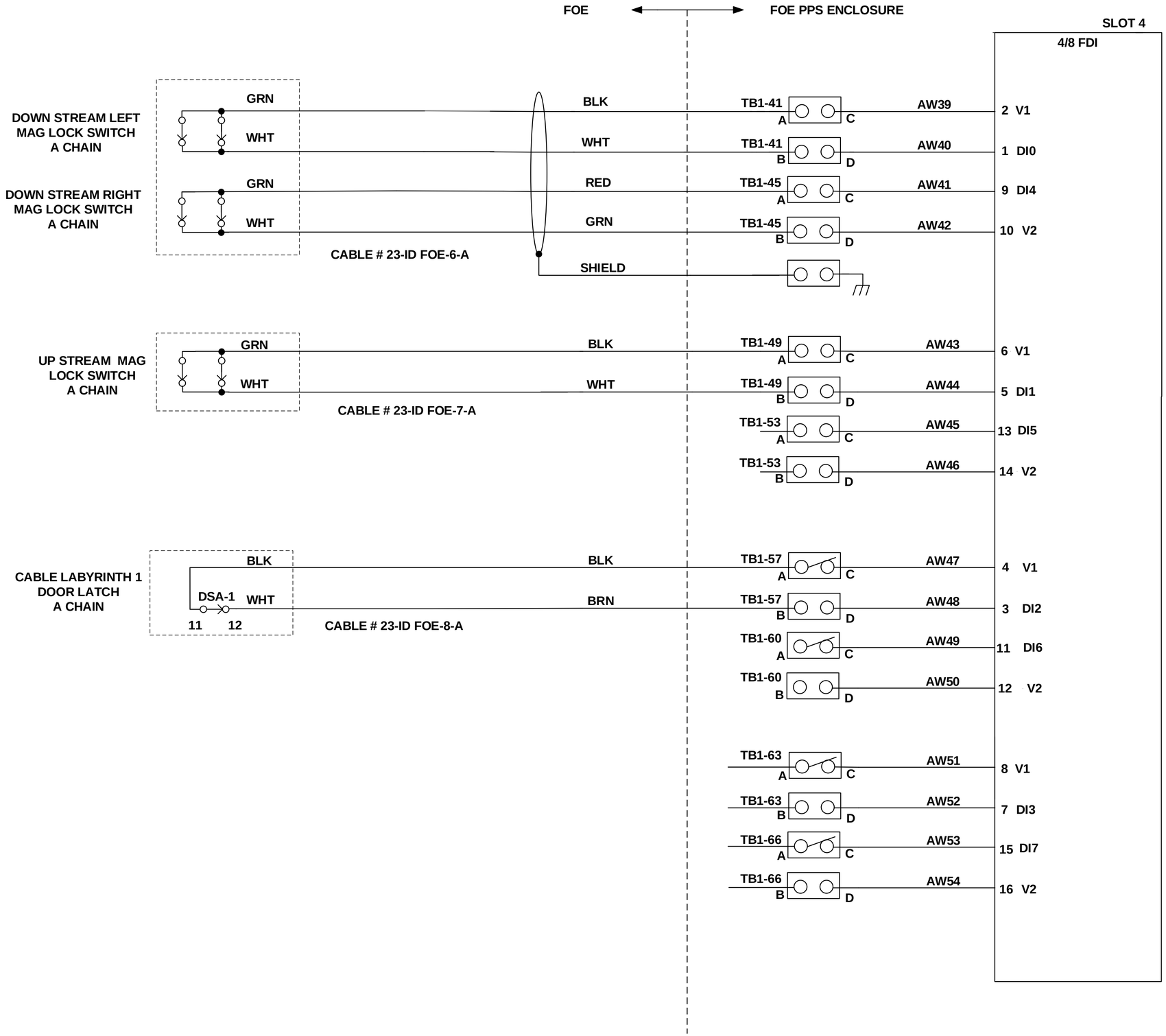

A

LT-EL-BL-EI-PPS-1230-91

LT-EL-BL-EI (DRAWING DIRECTORY)	LT-EL-BL-EI-PPS-1230-91 (DRAWING NUMBER)	F (REV)
COMPUTER REPRODUCIBLE	SCALE: N/A	SHEET 3 OF 45

REV	DESCRIPTION	DATE	BY	CHECKED	APP
	SEE SHEET 1				

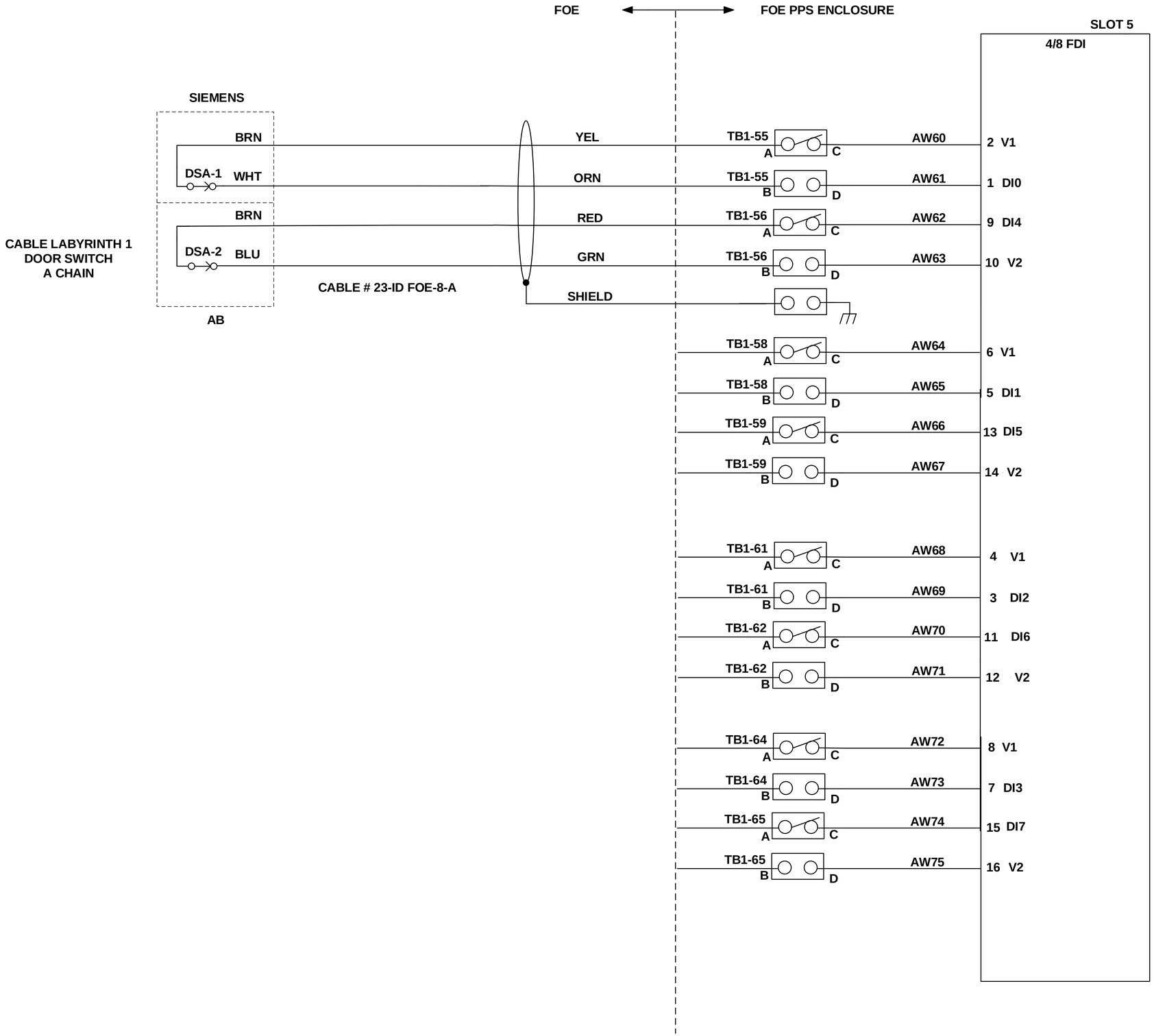

A

LT-EL-BL-EI-PPS-1230-91

LT-EL-BL-EI	LT-EL-BL-EI-PPS-1230-91	F
DRAWING DIRECTORY	DRAWING NUMBER	REV

COMPUTER REPRODUCIBLE | SCALE: N/A | SHEET 4 OF 45

REV	DESCRIPTION	DATE	BY	CHECKED	APP
	SEE SHEET 1				

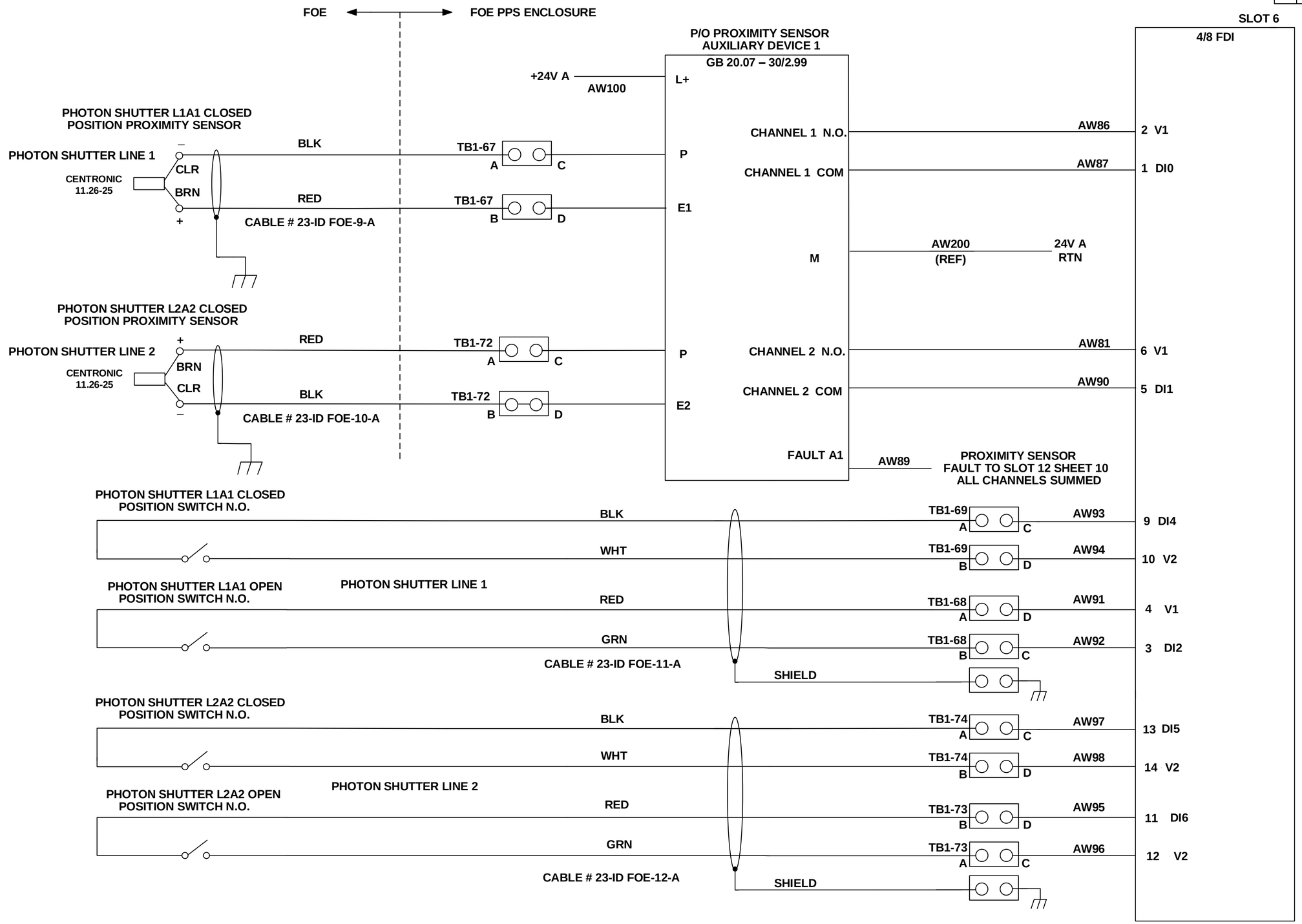

A

LT-EL-BL-EI-PPS-1230-91

LT-EL-BL-EI (DRAWING DIRECTORY)	LT-EL-BL-EI-PPS-1230-91 (DRAWING NUMBER)	F (REV)
COMPUTER REPRODUCIBLE	SCALE: N/A	SHEET 5 OF 45

REV	DESCRIPTION	DATE	BY	CHECKED	APP
	SEE SHEET 1				

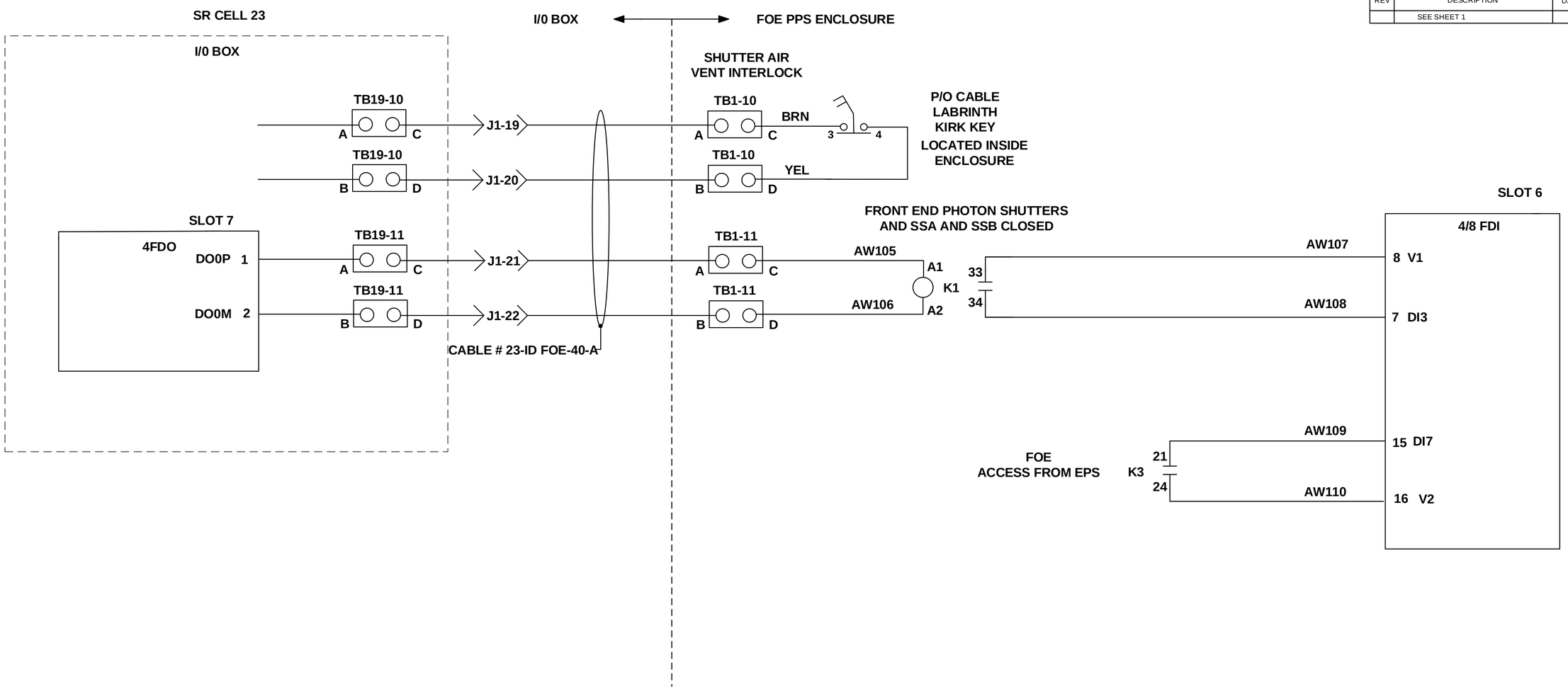

A

LT-EL-BL-EI DRAWING DIRECTORY	LT-EL-BL-EI-PPS-1230-91 DRAWING NUMBER	F REV.
COMPUTER REPRODUCIBLE	SCALE: N/A	SHEET 6 OF 45

LT-EL-BL-EI-PPS-1230-91

REV	DESCRIPTION	DATE	BY	CHECKED	APP
	SEE SHEET 1				

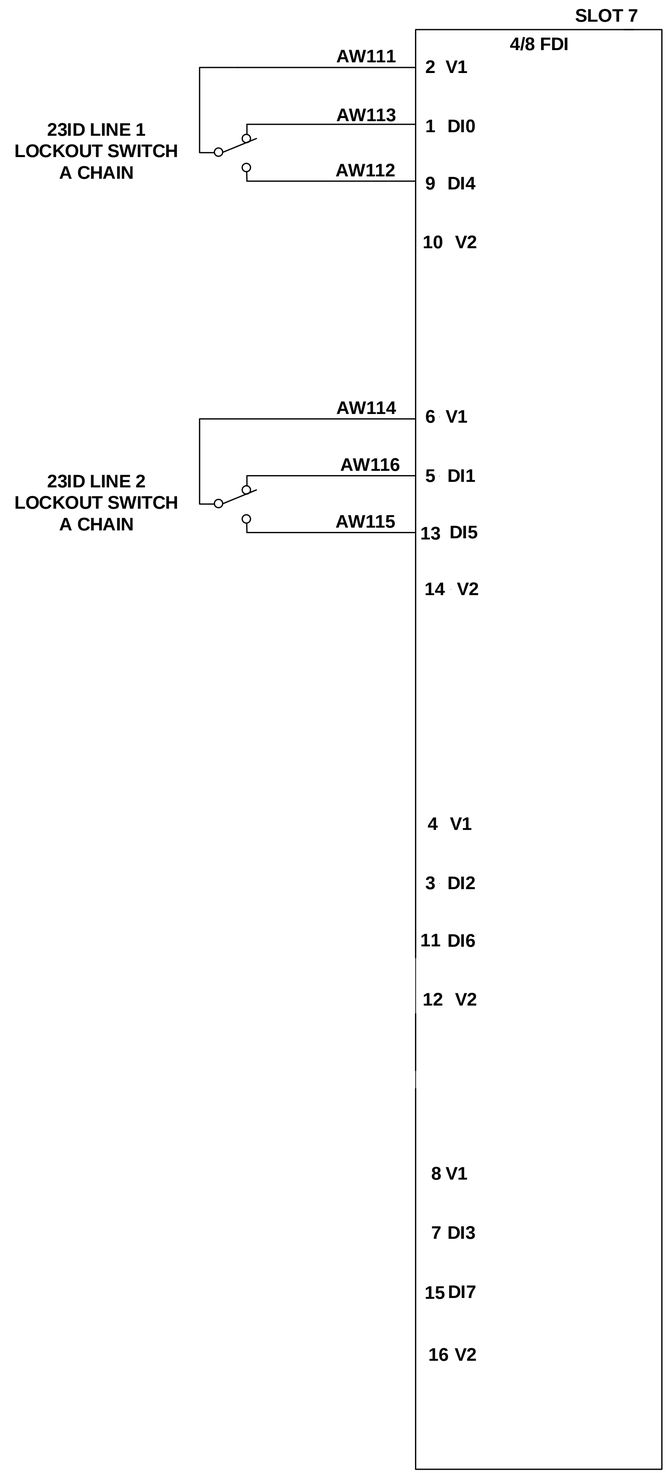

A

LT-EL-BL-EI-PPS-1230-91

LT-EL-BL-EI	LT-EL-BL-EI-PPS-1230-91	F
DRAWING DIRECTORY	DRAWING NUMBER	REV

COMPUTER REPRODUCIBLE | SCALE: N/A | SHEET 7 OF 45

REV	DESCRIPTION	DATE	BY	CHECKED	APP
	SEE SHEET 1				

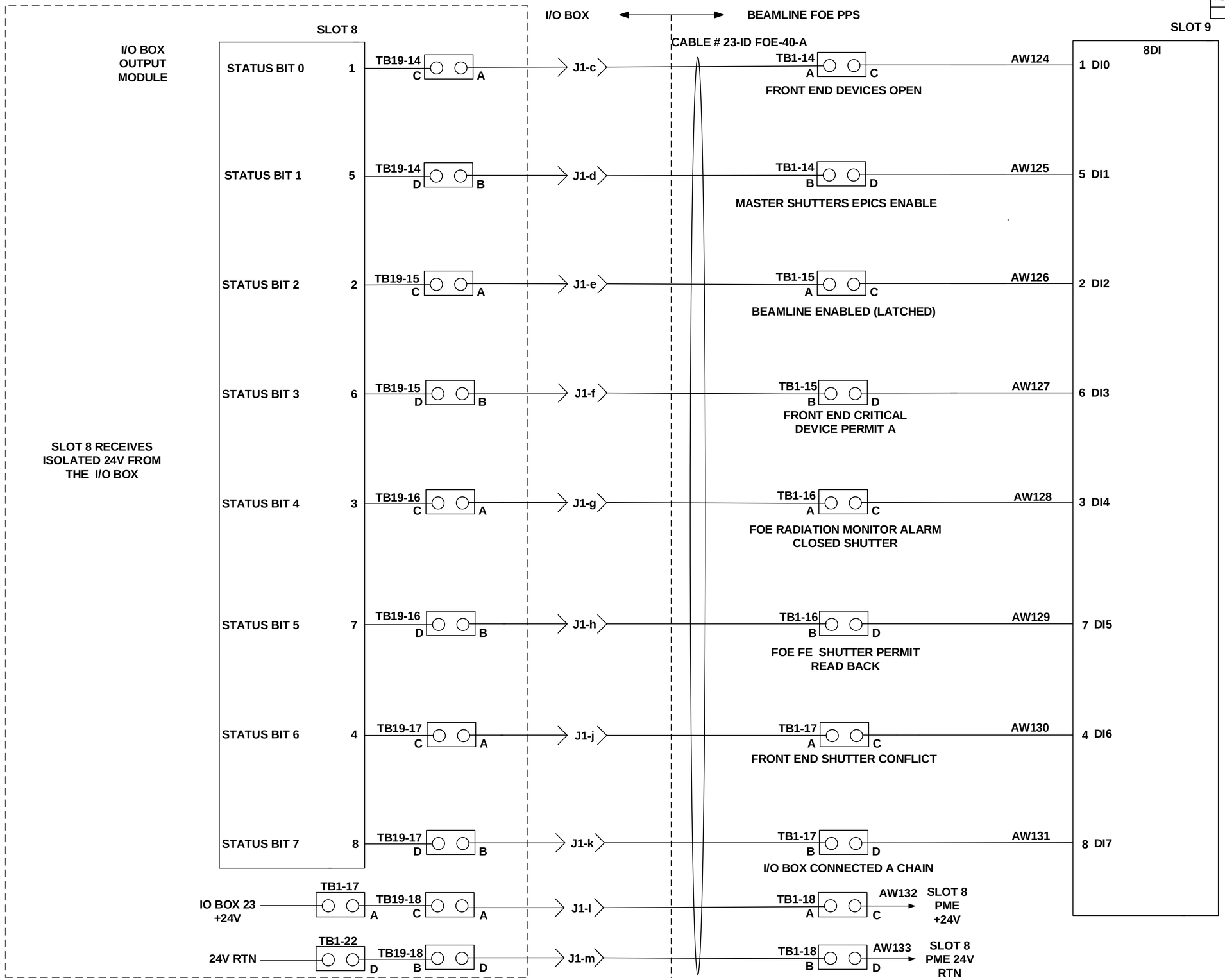

A

LT-EL-BL-EI-PPS-1230-91

LT-EL-BL-EI (DRAWING DIRECTORY)	LT-EL-BL-EI-PPS-1230-91 (DRAWING NUMBER)	F (REV)
COMPUTER REPRODUCIBLE	SCALE: N/A	SHEET 8 OF 45

REV	DESCRIPTION	DATE	BY	CHECKED	APP
	SEE SHEET 1				

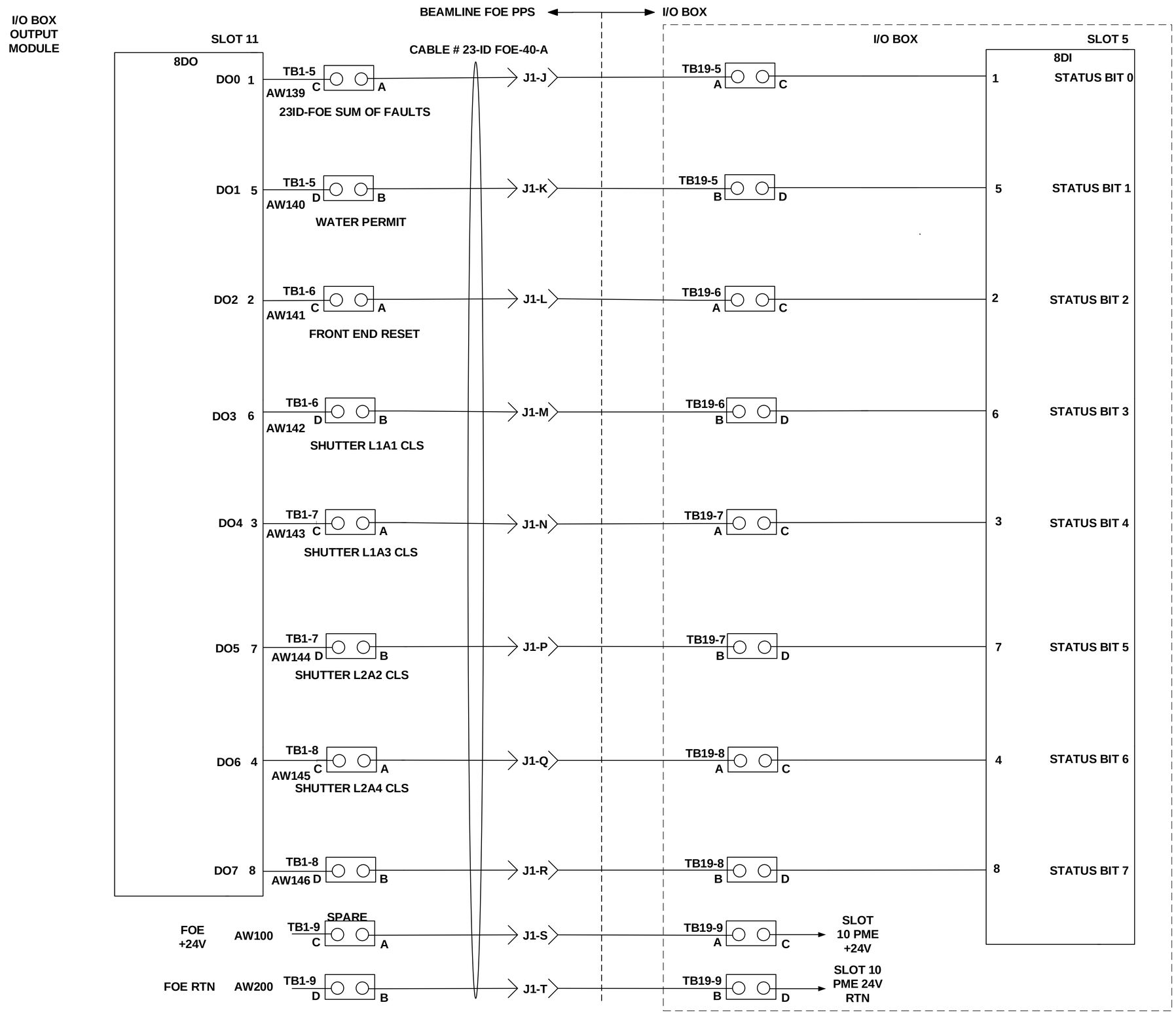

A

LT-EL-BL-EI-PPS-1230-91

LT-EL-BL-EI (DRAWING DIRECTORY)	LT-EL-BL-EI-PPS-1230-91 (DRAWING NUMBER)	F (REV)
COMPUTER REPRODUCIBLE	SCALE: N/A	SHEET 9 OF 45

REV	DESCRIPTION	DATE	BY	CHECKED	APP
	SEE SHEET 1				

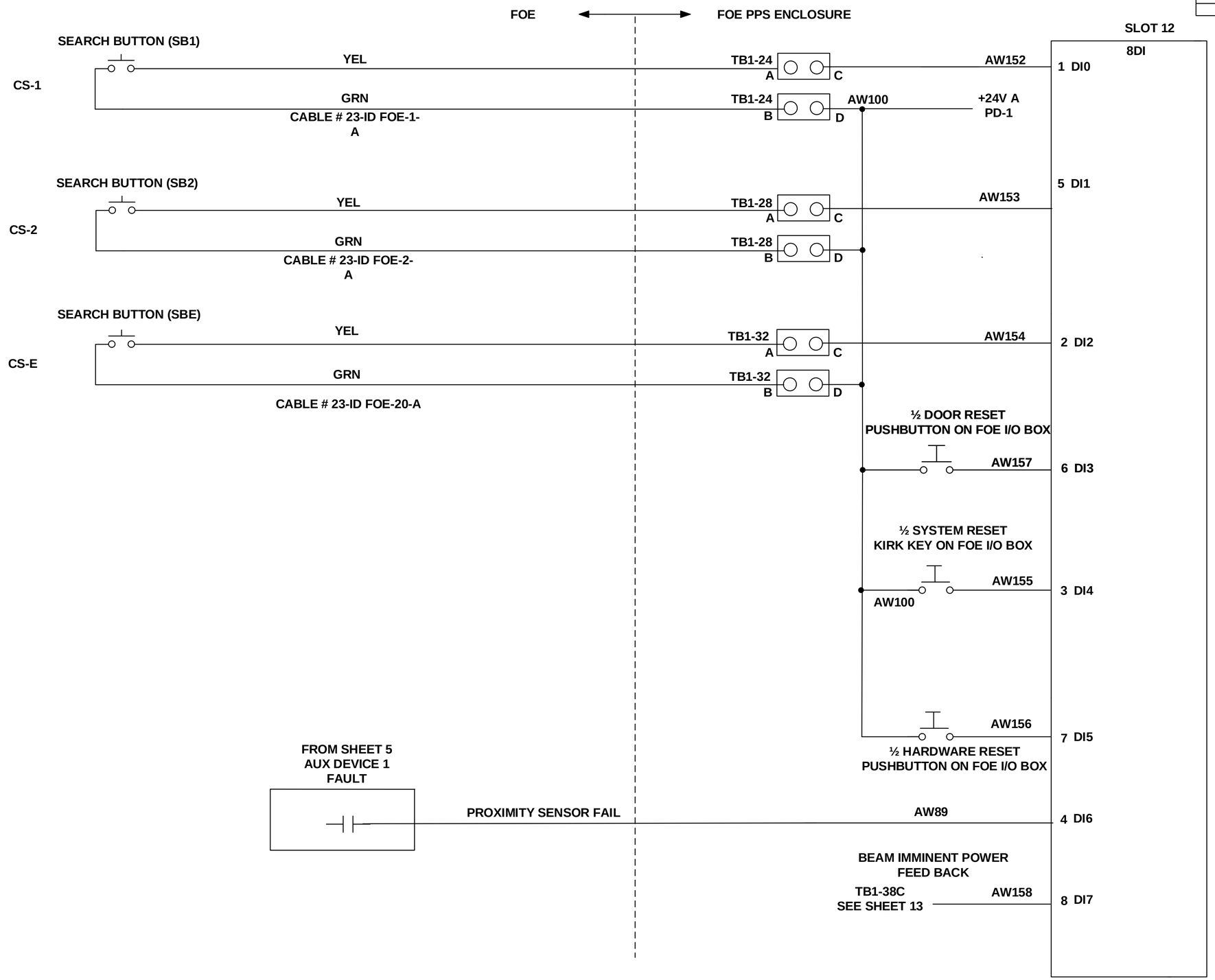

A

LT-EL-BL-EI-PPS-1230-91

LT-EL-BL-EI	LT-EL-BL-EI-PPS-1230-91	F
DRAWING DIRECTORY	DRAWING NUMBER	REV
COMPUTER REPRODUCIBLE	SCALE: N/A	SHEET 10 OF 45

REV	DESCRIPTION	DATE	BY	CHECKED	APP
	SEE SHEET 1				

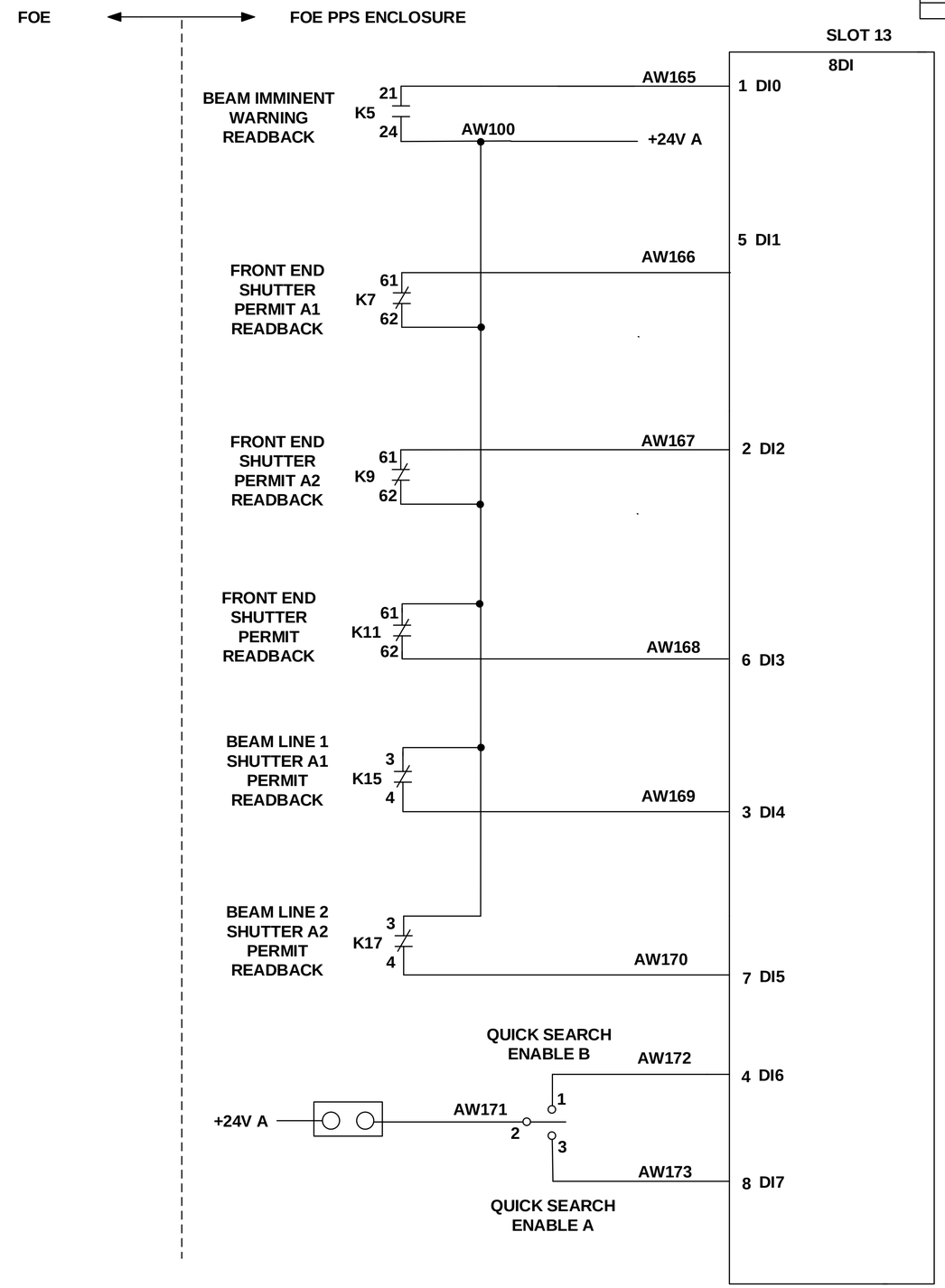

A

LT-EL-BL-EI-PPS-1230-91

LT-EL-BL-EI (DRAWING DIRECTORY)	LT-EL-BL-EI-PPS-1230-91 (DRAWING NUMBER)	F	E (REV)
COMPUTER REPRODUCIBLE	SCALE: N/A	SHEET 11 OF 45	

REV	DESCRIPTION	DATE	BY	CHECKED	APP
	SEE SHEET 1				

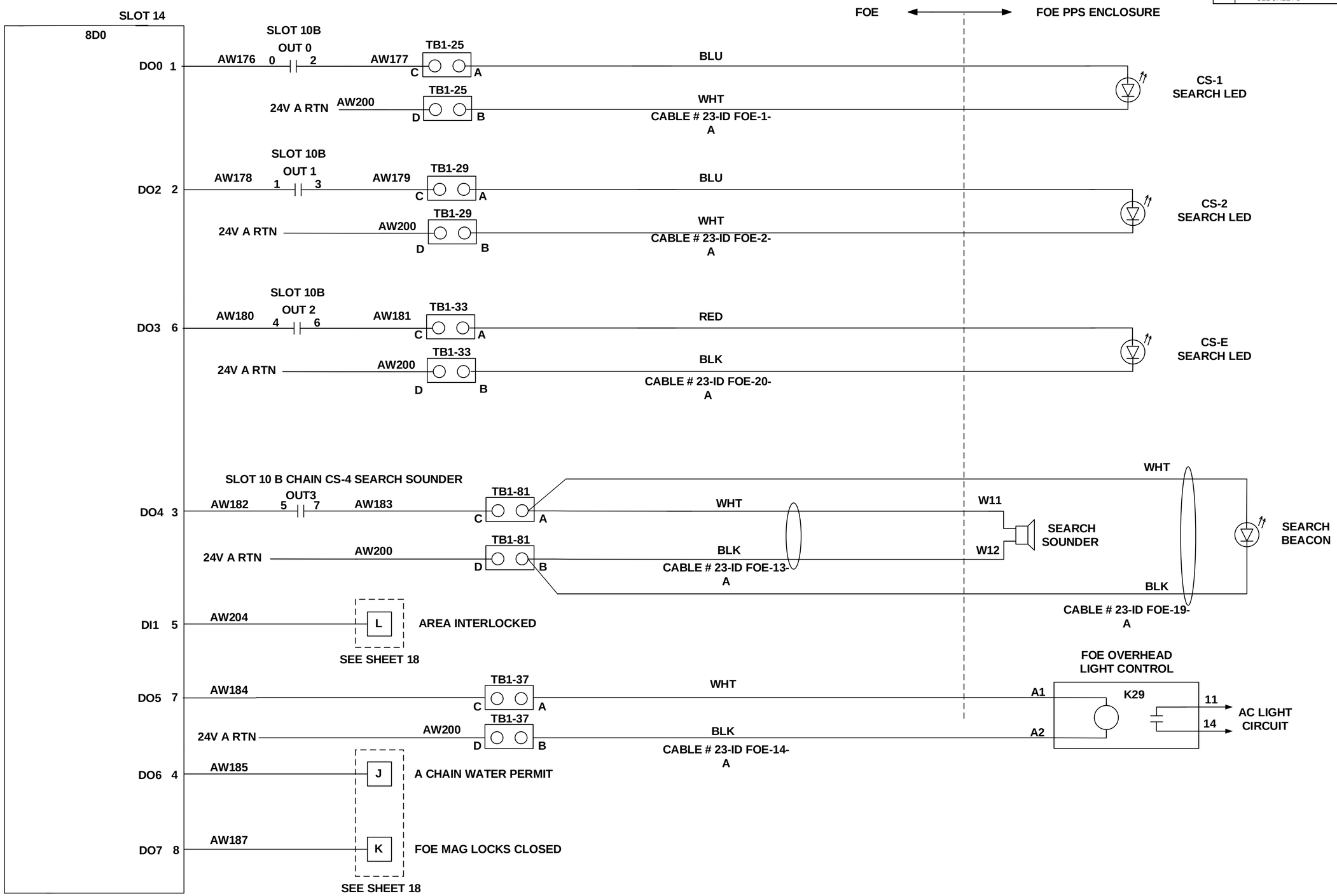

A

LT-EL-BL-EI-PPS-1230-91

LT-EL-BL-EI (DRAWING DIRECTORY)	LT-EL-BL-EI-PPS-1230-91 (DRAWING NUMBER)	F (REV)
COMPUTER REPRODUCIBLE	SCALE: N/A	SHEET 12 OF 45

REV	DESCRIPTION	DATE	BY	CHECKED	APP
	SEE SHEET 1				

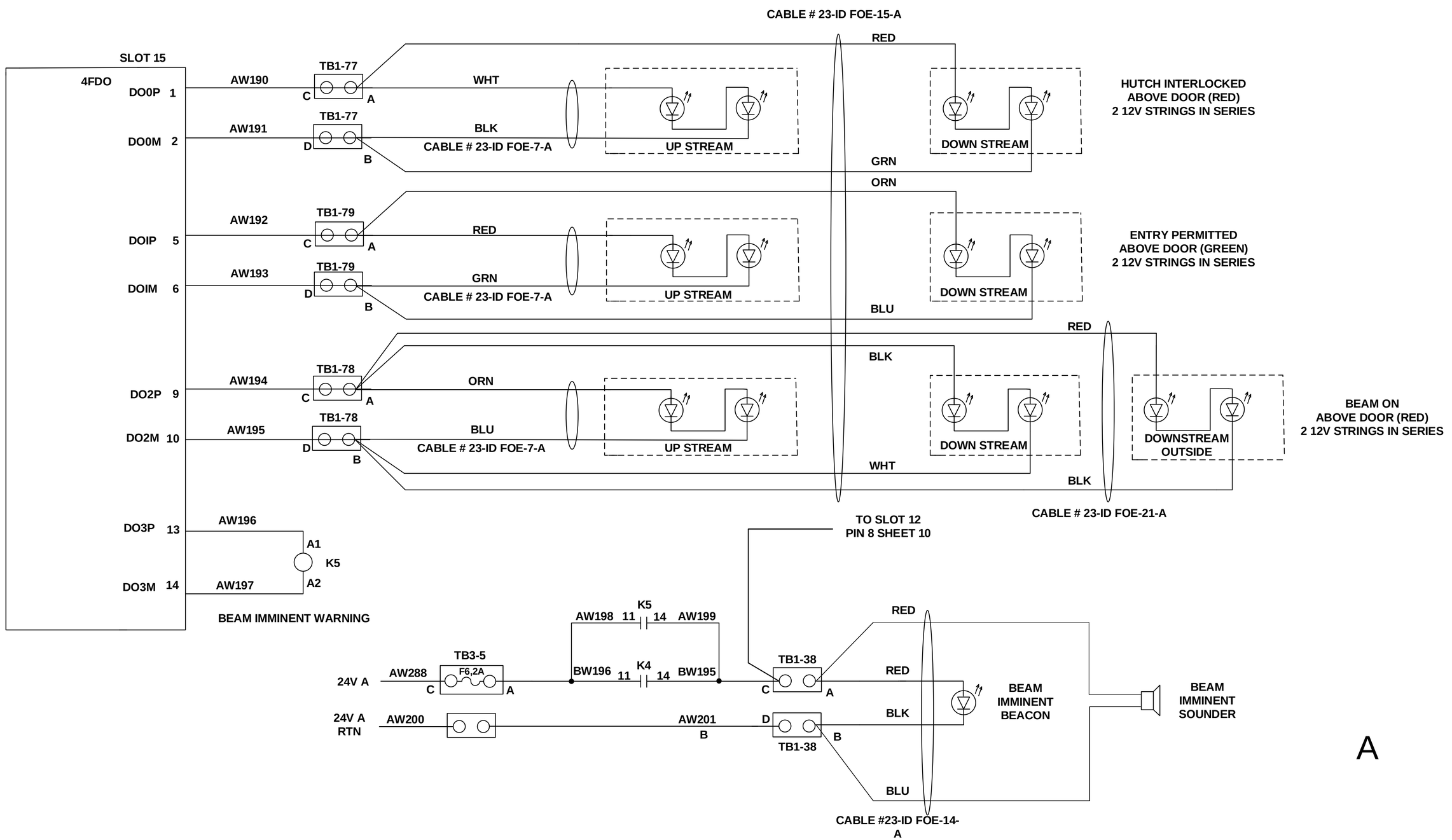

A

LT-EL-BL-EI	LT-EL-BL-EI-PPS-1230-91	F
DRAWING DIRECTORY	DRAWING NUMBER	REV

COMPUTER REPRODUCIBLE | SCALE: N/A | SHEET 13 OF 45

LT-EL-BL-EI-PPS-1230-91

REV	DESCRIPTION	DATE	BY	CHECKED	APP
	SEE SHEET 1				

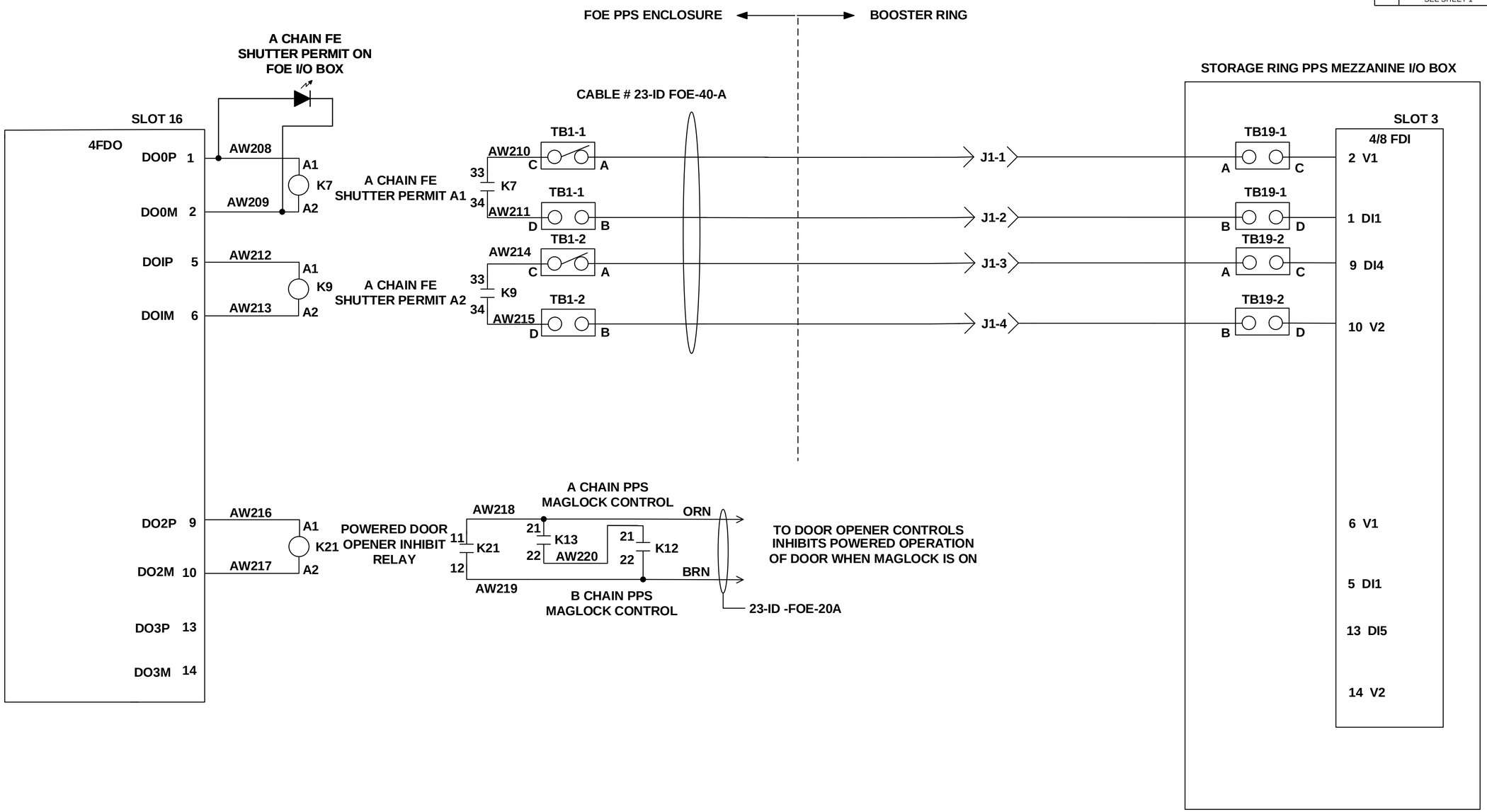

A

LT-EL-BL-EI (DRAWING DIRECTORY)	LT-EL-BL-EI-PPS-1230-91 (DRAWING NUMBER)	F (REV)
COMPUTER REPRODUCIBLE	SCALE: N/A	SHEET 14 OF 45

LT-EL-BL-EI-PPS-1230-91

REV	DESCRIPTION	DATE	BY	CHECKED	APP
	SEE SHEET 1				

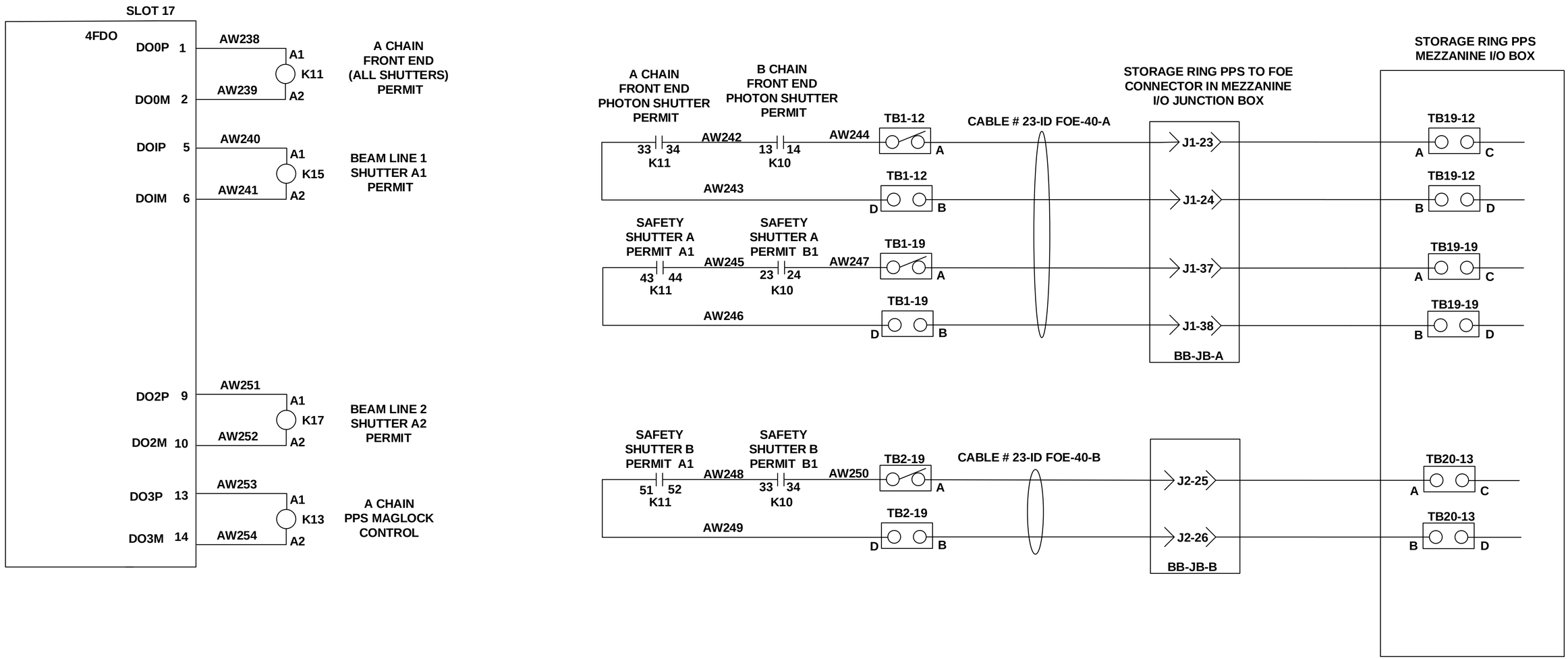

A

LT-EL-BL-EI (DRAWING DIRECTORY)	LT-EL-BL-EI-PPS-1230-91 (DRAWING NUMBER)	F (REV)
COMPUTER REPRODUCIBLE	SCALE: N/A	SHEET 15 OF 45

LT-EL-BL-EI-PPS-1230-91

REV	DESCRIPTION	DATE	BY	CHECKED	APP
	SEE SHEET 1				

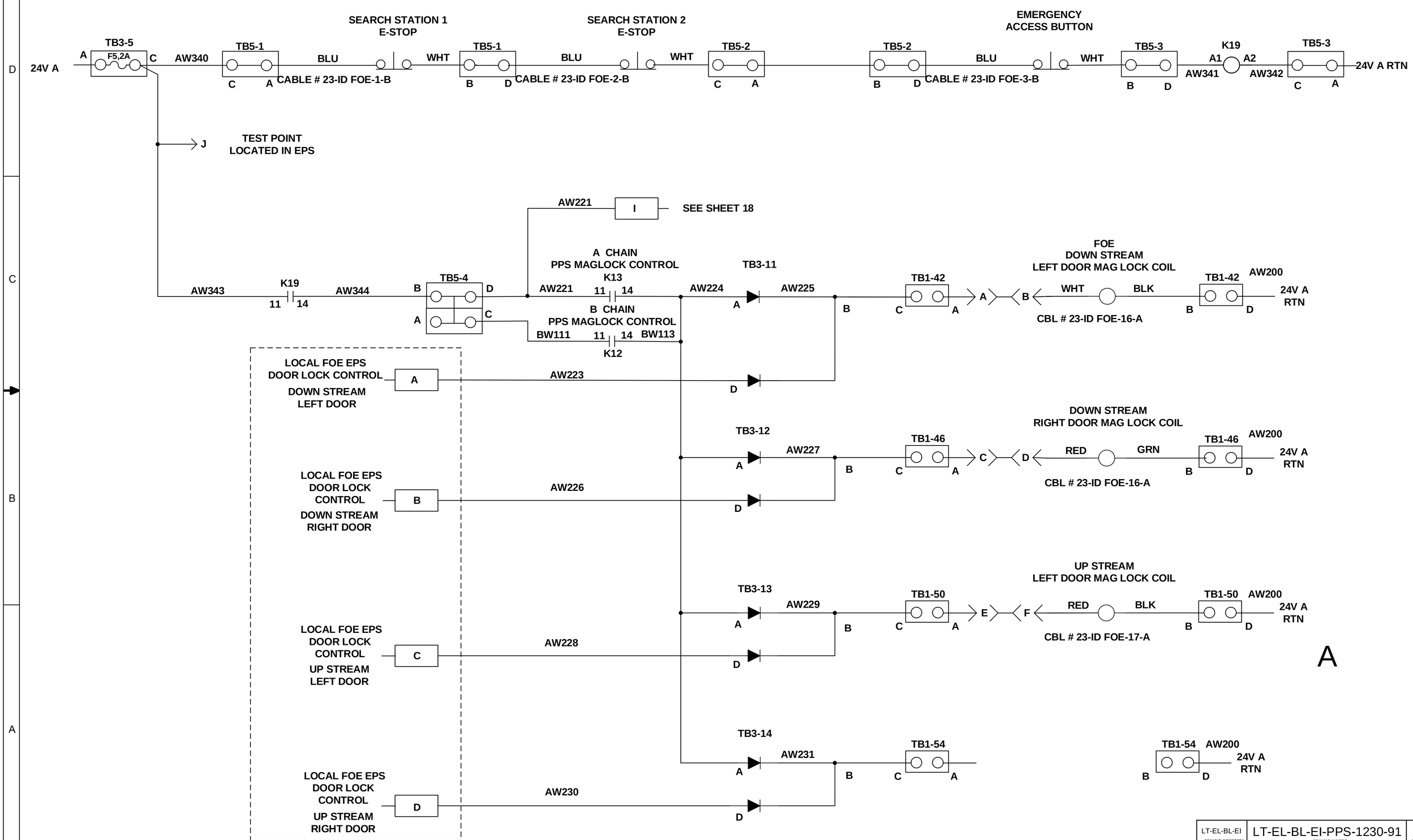

LT-EL-BL-EI-PPS-1230-91

LT-EL-BL-EI (DRAWING DIRECTORY)	LT-EL-BL-EI-PPS-1230-91 (DRAWING NUMBER)	F (REV)
COMPUTER REPRODUCIBLE	SCALE: N/A	SHEET 16 OF 45

REV	DESCRIPTION	DATE	BY	CHECKED	APP
	SEE SHEET 1				

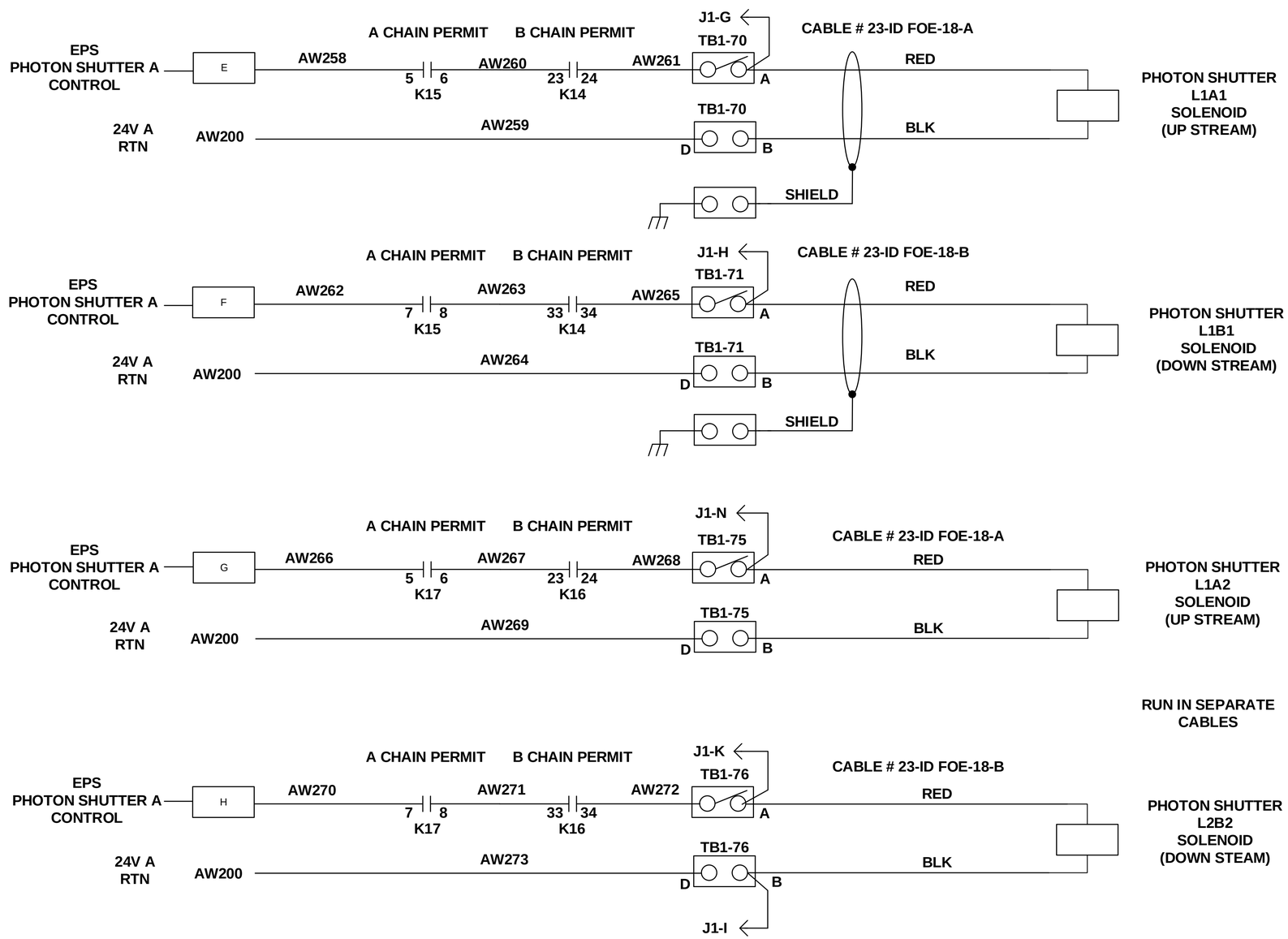

J1-G,H,I,K,N = TEST POINTS

A

LT-EL-BL-EI-PPS-1230-91

LT-EL-BL-EI (DRAWING DIRECTORY)	LT-EL-BL-EI-PPS-1230-91 (DRAWING NUMBER)	F (REV)
COMPUTER REPRODUCIBLE	SCALE: N/A	SHEET 17 OF 45

REV	DESCRIPTION	DATE	BY	CHECKED	APP
	SEE SHEET 1				

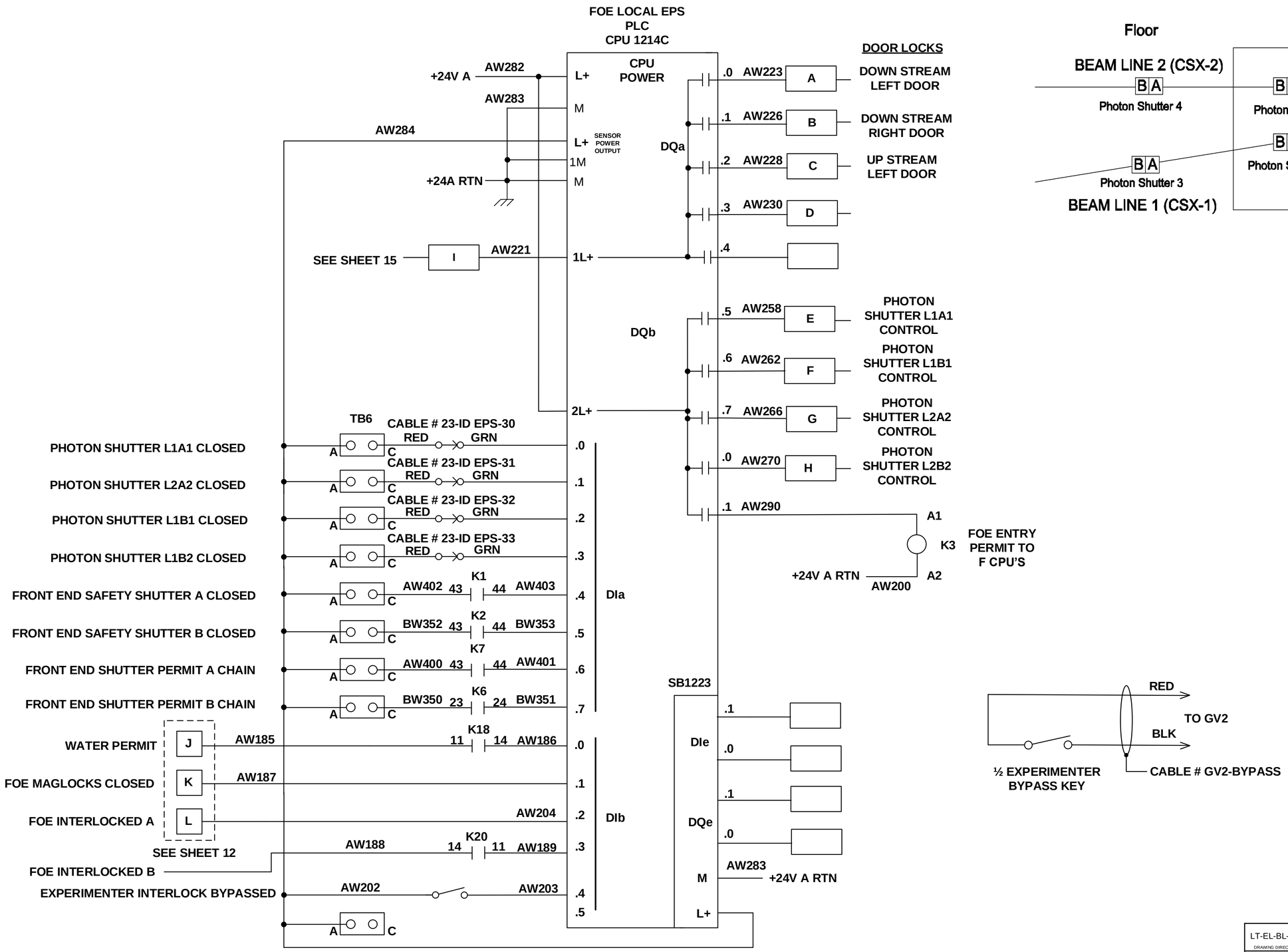

EPS

A

LT-EL-BL-EI-PPS-1230-91

LT-EL-BL-EI	LT-EL-BL-EI-PPS-1230-910	F
DRAWING DIRECTORY	DRAWING NUMBER	REV

COMPUTER REPRODUCIBLE | SCALE: N/A | SHEET 18 OF 45

REV	DESCRIPTION	DATE	BY	CHECKED	APP
	SEE SHEET 1				

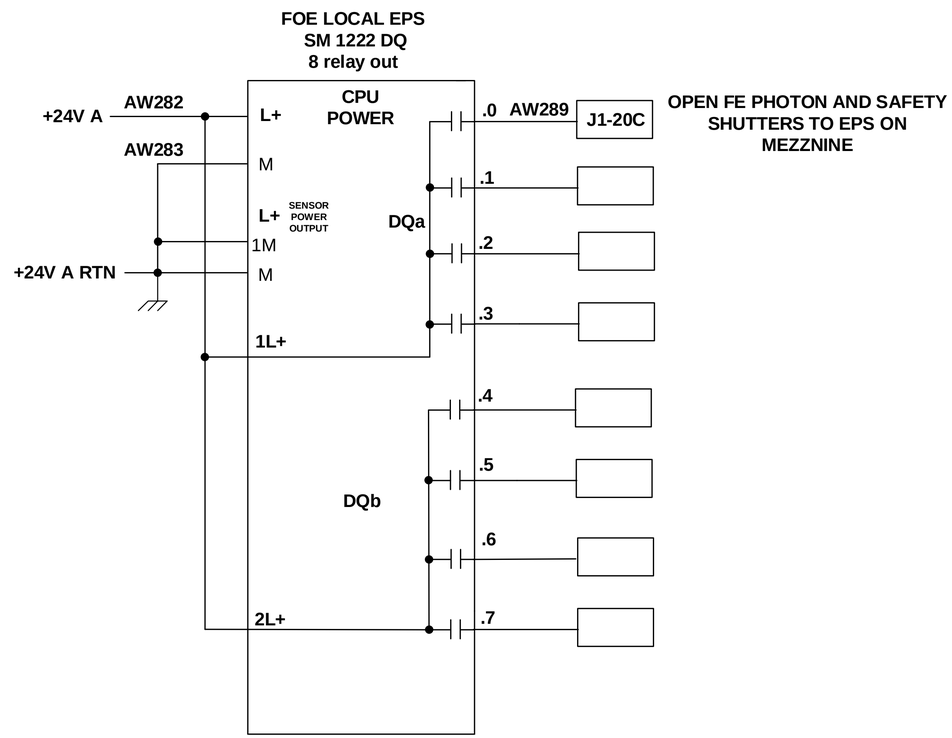

EPS

A

LT-EL-BL-EI-PPS-1230-91

LT-EL-BL-EI (DRAWING DIRECTORY)	LT-EL-BL-EI-PPS-1230-91 (DRAWING NUMBER)	F (REV)
COMPUTER REPRODUCIBLE	SCALE: N/A	SHEET 19 OF 45

REV	DESCRIPTION	DATE	BY	CHECKED	APP
	SEE SHEET 1				

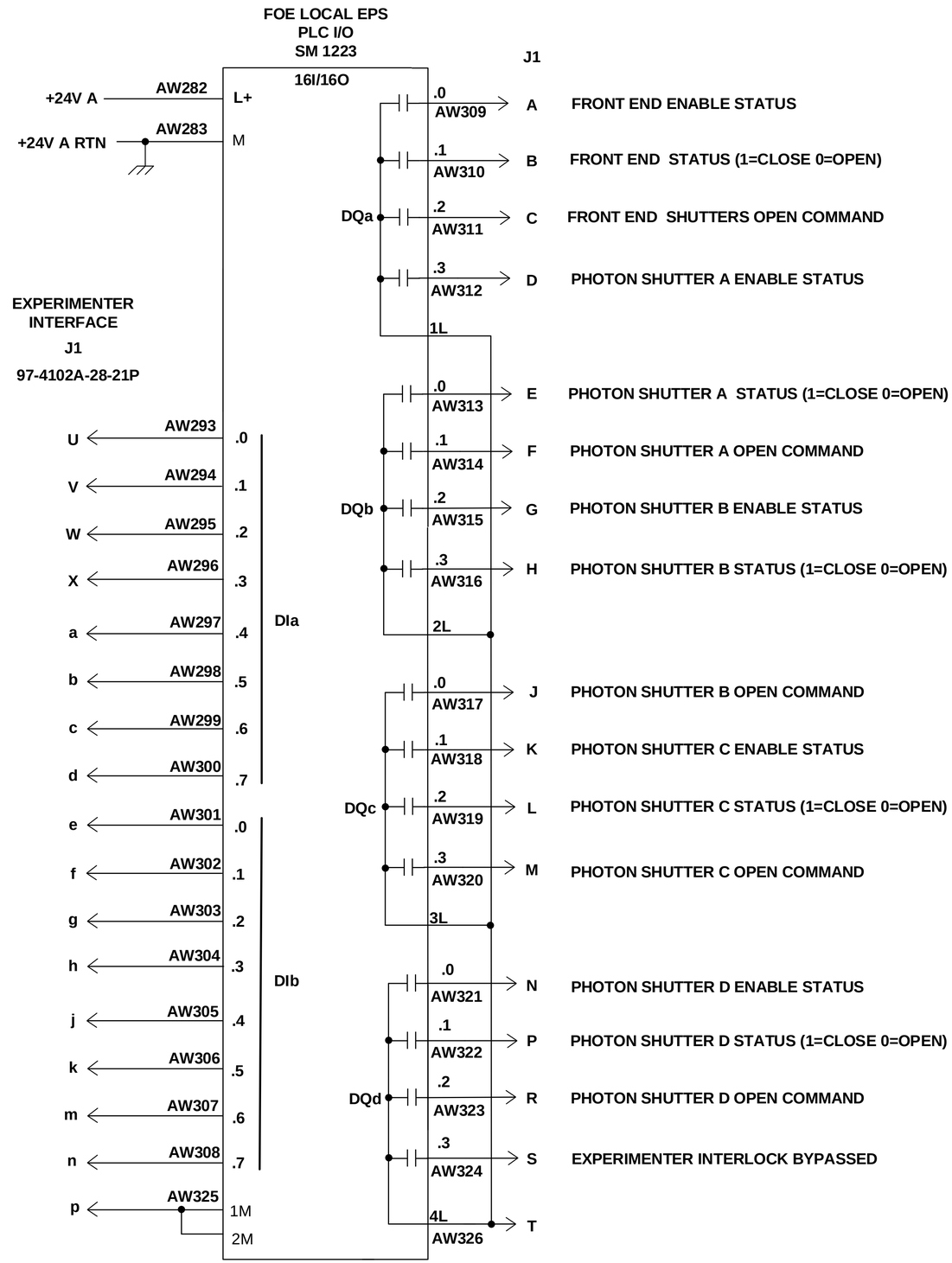

EPS

A

LT-EL-BL-EI-PPS-1230-91

LT-EL-BL-EI	LT-EL-BL-EI-PPS-1230-91	F
DRAWING DIRECTORY	DRAWING NUMBER	REV

COMPUTER REPRODUCIBLE | SCALE: N/A | SHEET 20 OF 45

REV	DESCRIPTION	DATE	BY	CHECKED	APP
	SEE SHEET 1				

A CHAIN
+24V WIRES ARE RED
24V RTN WIRES ARE BLK
SIGNAL WIRES ARE ORN

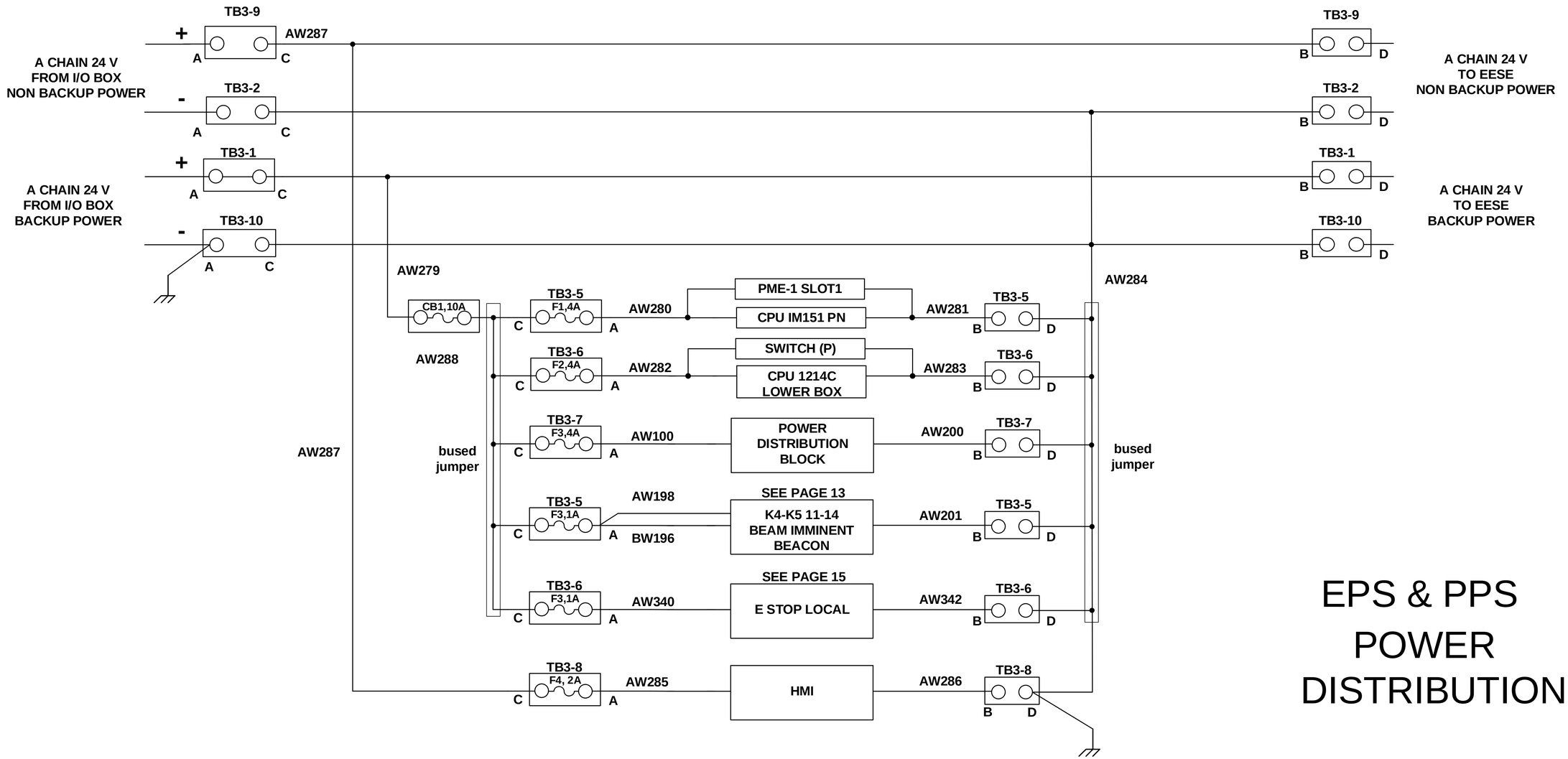

EPS & PPS POWER DISTRIBUTION

A

LT-EL-BL-EI-PPS-1230-91

LT-EL-BL-EI (DRAWING DIRECTORY)	LT-EL-BL-EI-PPS-1230-91 (DRAWING NUMBER)	D	F (REV)
COMPUTER REPRODUCIBLE	SCALE: N/A	SHEET 21 OF 45	

REV	DESCRIPTION	DATE	BY	CHECKED	APP
	SEE SHEET 1				

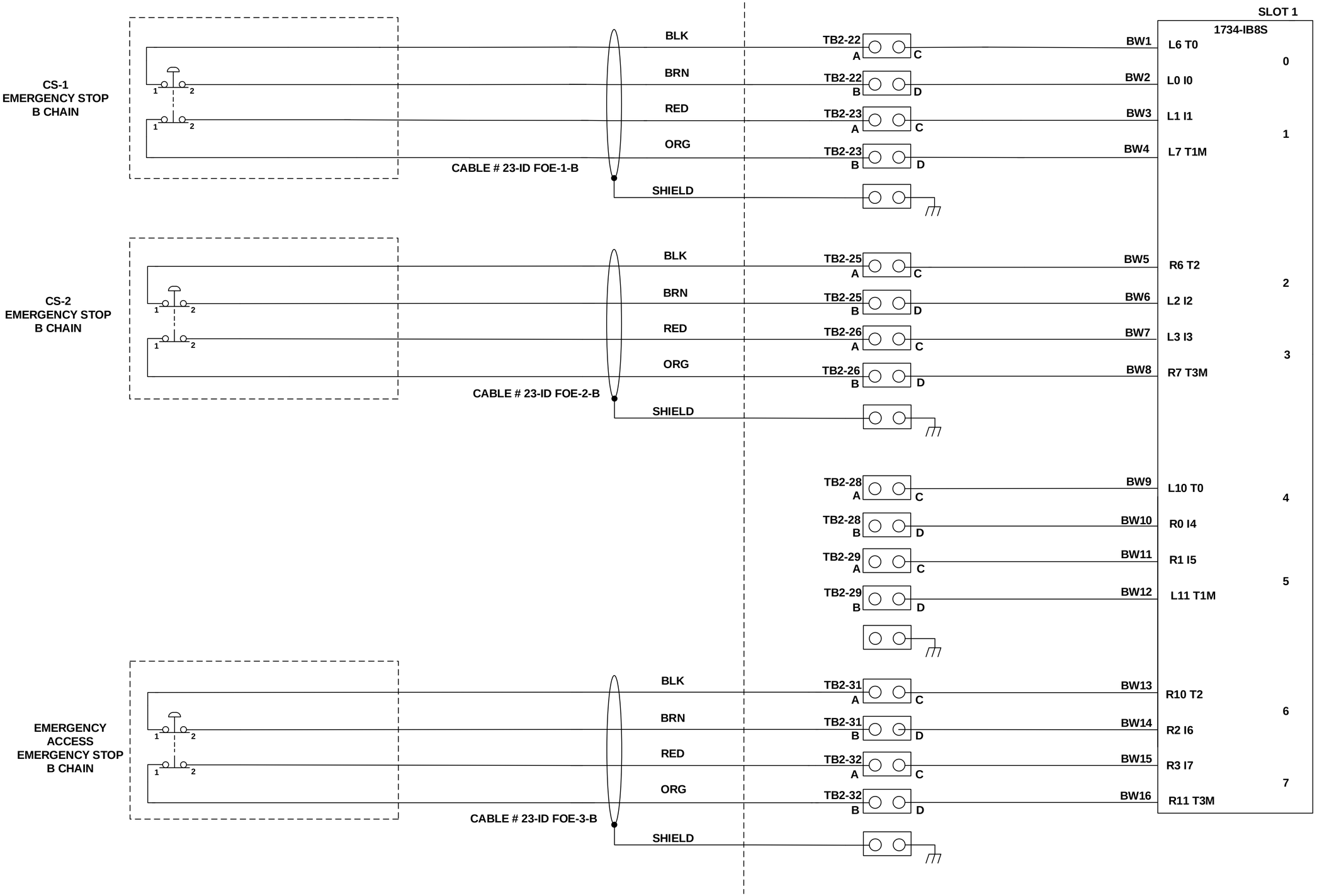

LT-EL-BL-EI-PPS-1230-91

LT-EL-BL-EI	LT-EL-BL-EI-PPS-1230-91	F
DRAWING DIRECTORY	DRAWING NUMBER	REV

COMPUTER REPRODUCIBLE | SCALE: N/A | SHEET 22 OF 45

REV	DESCRIPTION	DATE	BY	CHECKED	APP
	SEE SHEET 1				

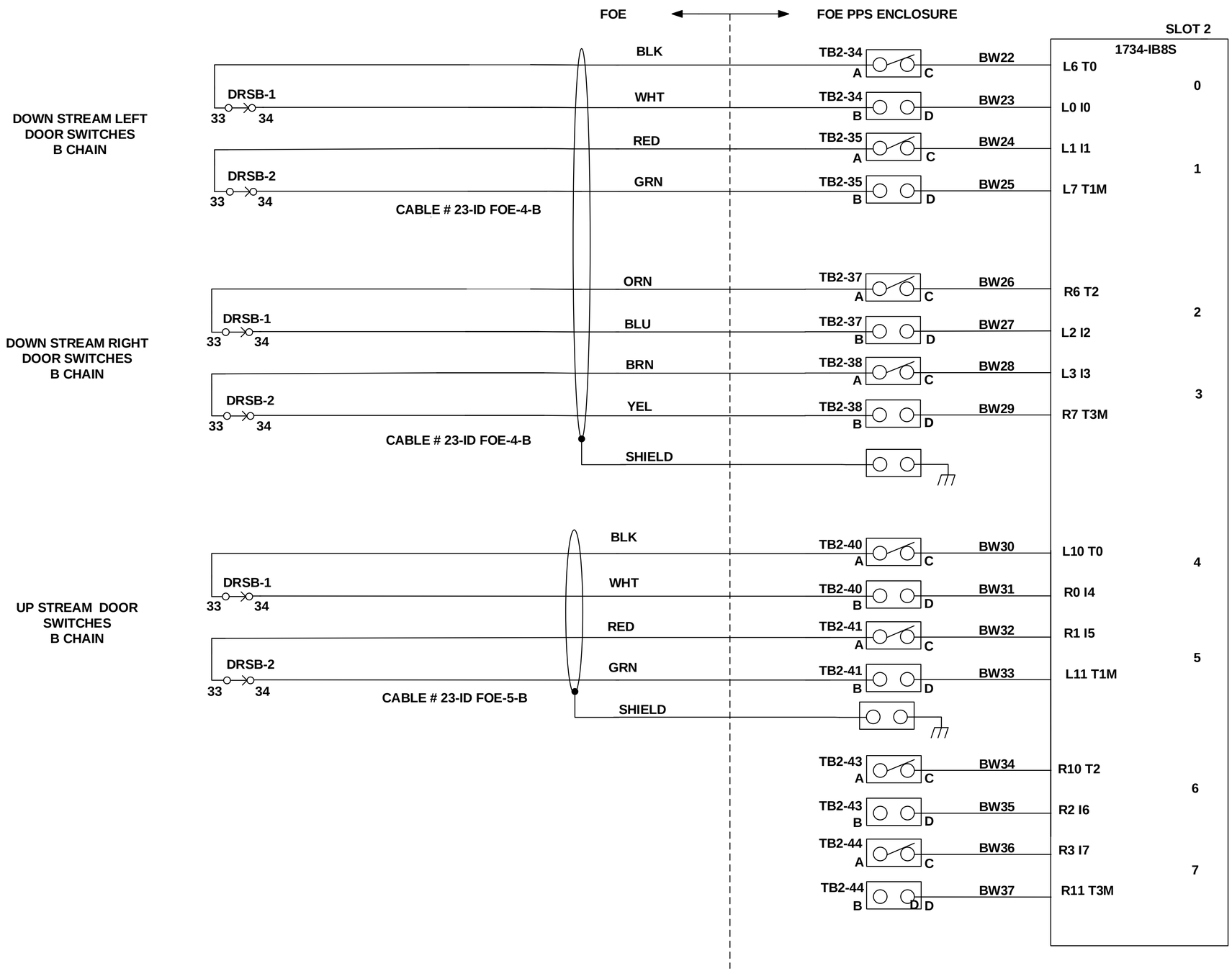

B

LT-EL-BL-EI-PPS-1230-91

LT-EL-BL-EI (DRAWING DIRECTORY)	LT-EL-BL-EI-PPS-1230-91 (DRAWING NUMBER)	F (REV)
COMPUTER REPRODUCIBLE	SCALE : N/A	SHEET 23 OF 45

REV	DESCRIPTION	DATE	BY	CHECKED	APP
	SEE SHEET 1				

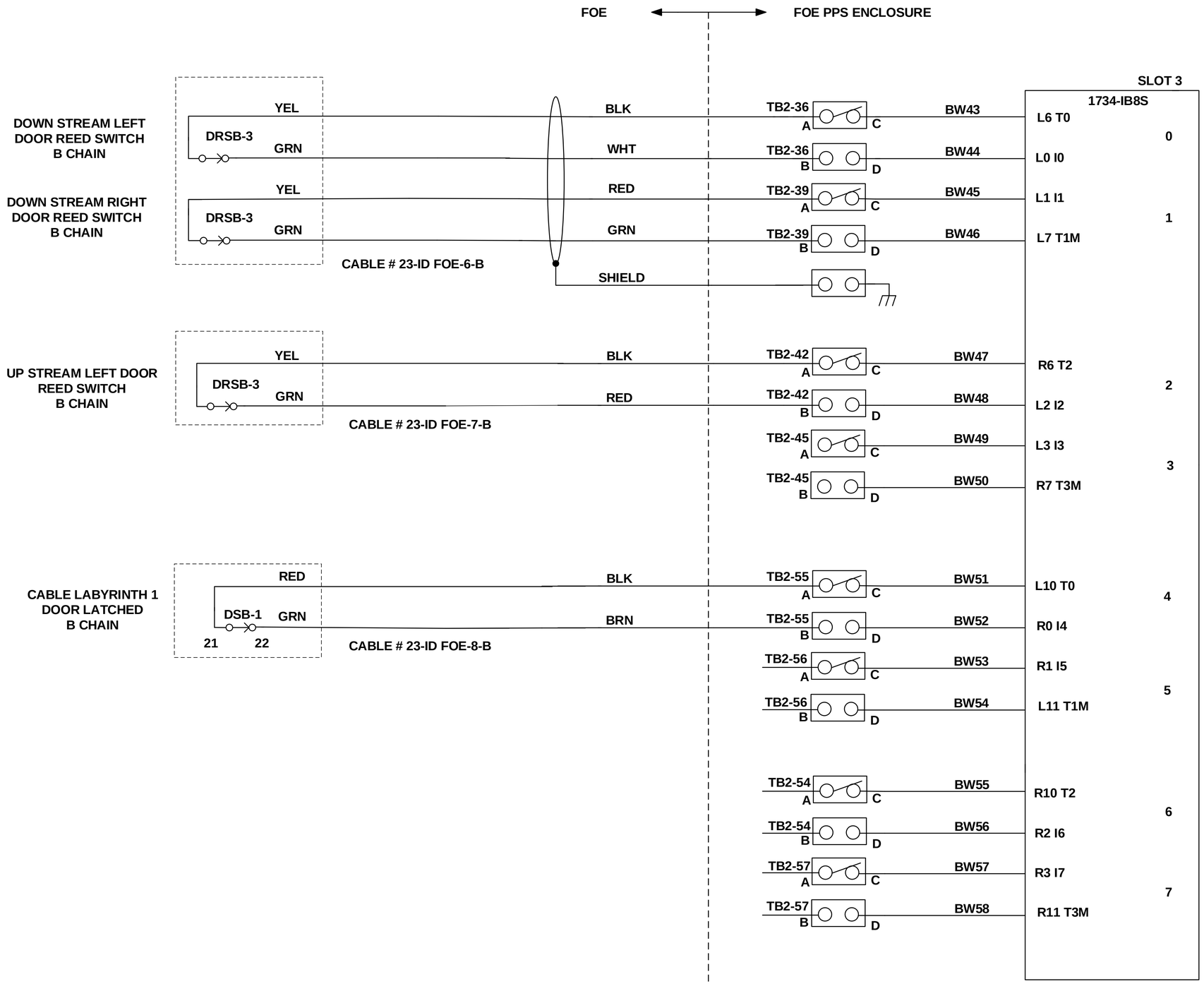

B

LT-EL-BL-EI-PPS-1230-91

LT-EL-BL-EI	LT-EL-BL-EI-PPS-1230-91	F
DRAWING DIRECTORY	DRAWING NUMBER	REV

COMPUTER REPRODUCIBLE | SCALE : N/A | SHEET 24 OF 45

REV	DESCRIPTION	DATE	BY	CHECKED	APP
	SEE SHEET 1				

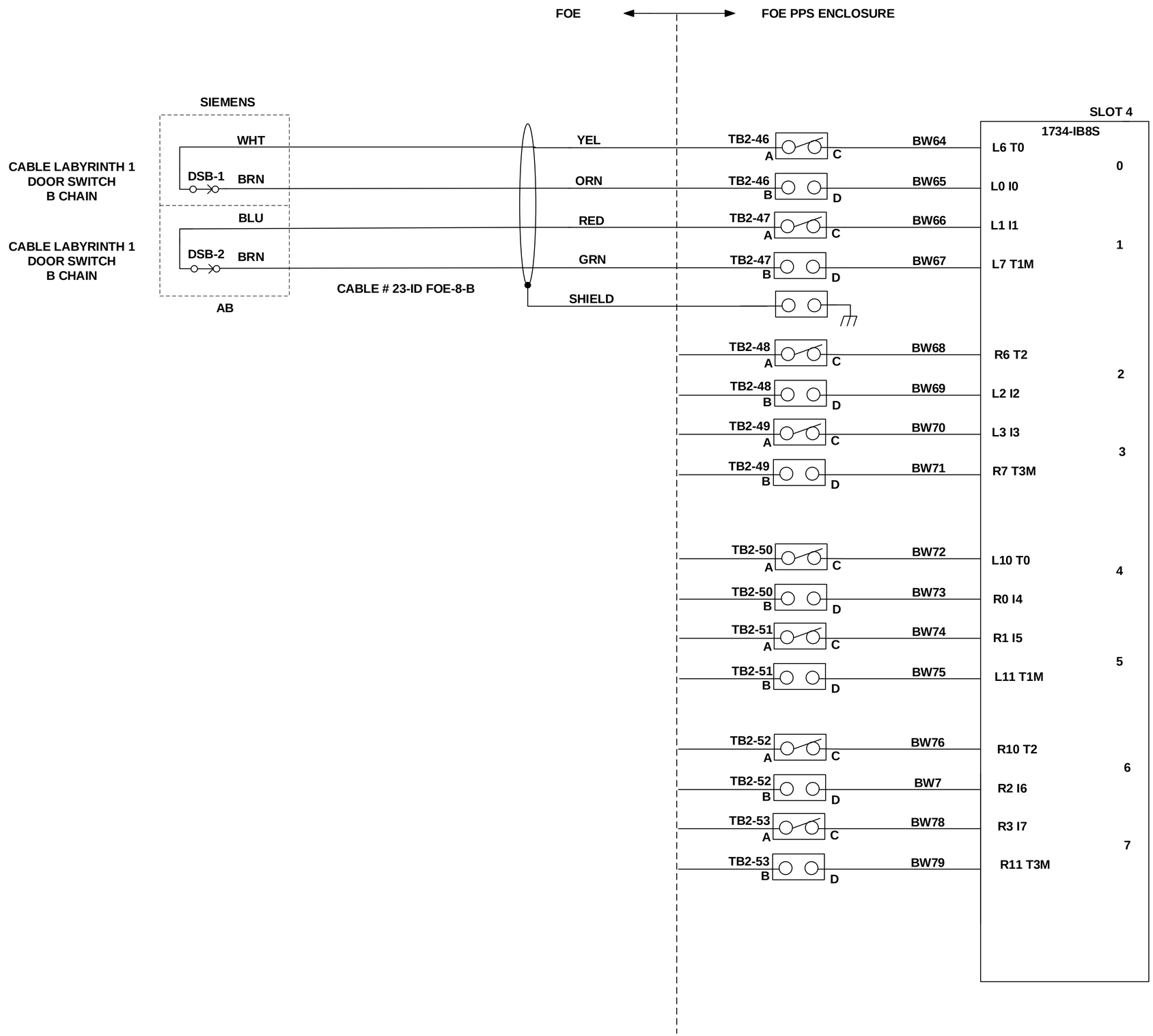

B

LT-EL-BL-EI-PPS-1230-91

LT-EL-BL-EI DRAWING DIRECTORY	LT-EL-BL-EI-PPS-1230-91 DRAWING NUMBER	F	E REV
COMPUTER REPRODUCIBLE	SCALE : N/A	SHEET 25 OF 45	

REV	DESCRIPTION	DATE	BY	CHECKED	APP
	SEE SHEET 1				

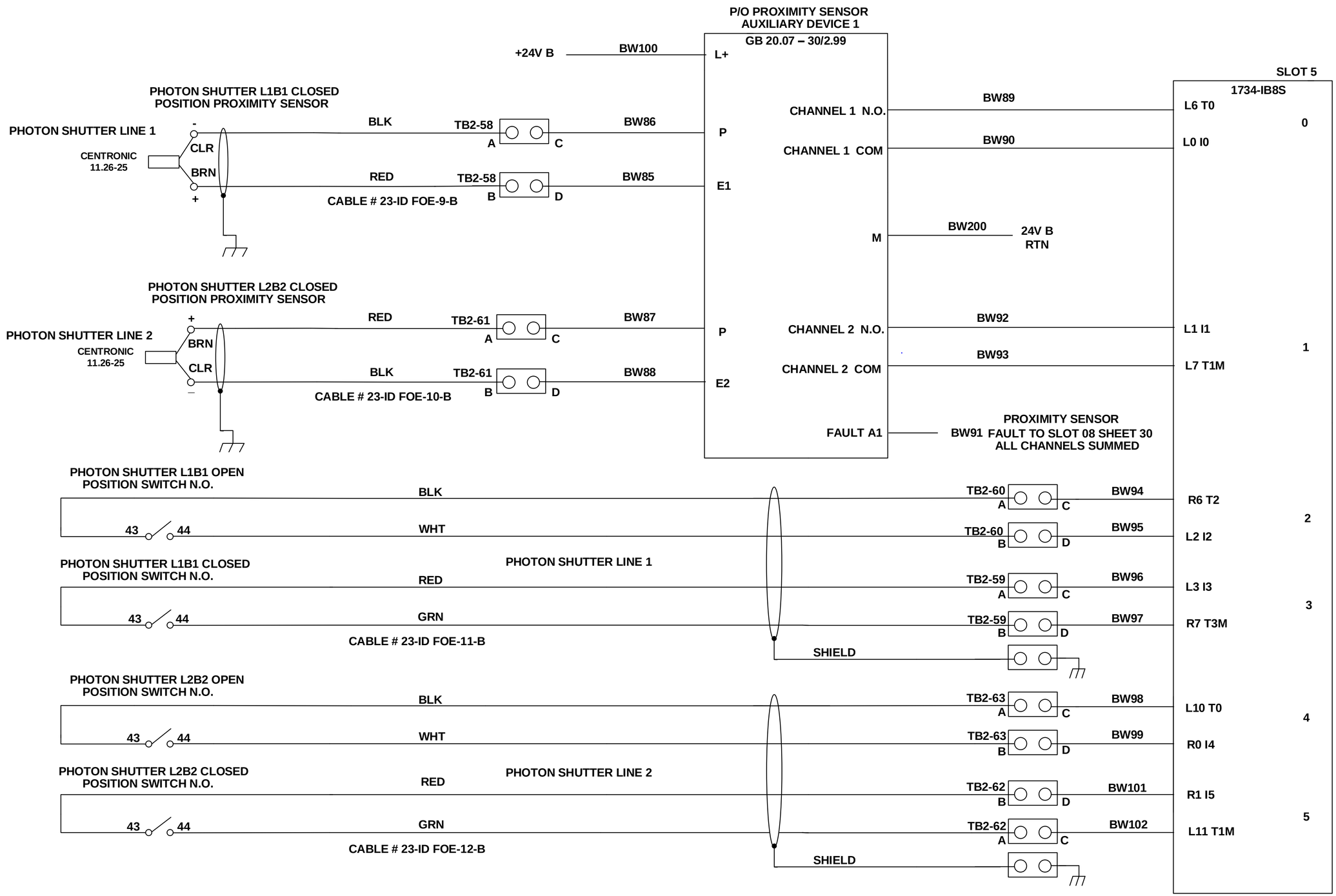

B

LT-EL-BL-EI (DRAWING DIRECTORY)	LT-EL-BL-EI-PPS-1230-91 (DRAWING NUMBER)	REV E	
COMPUTER REPRODUCIBLE	SCALE: N/A	SHEET 26 OF 45	

LT-EL-BL-EI-PPS-1230-91

REV	DESCRIPTION	DATE	BY	CHECKED	APP
	SEE SHEET 1				

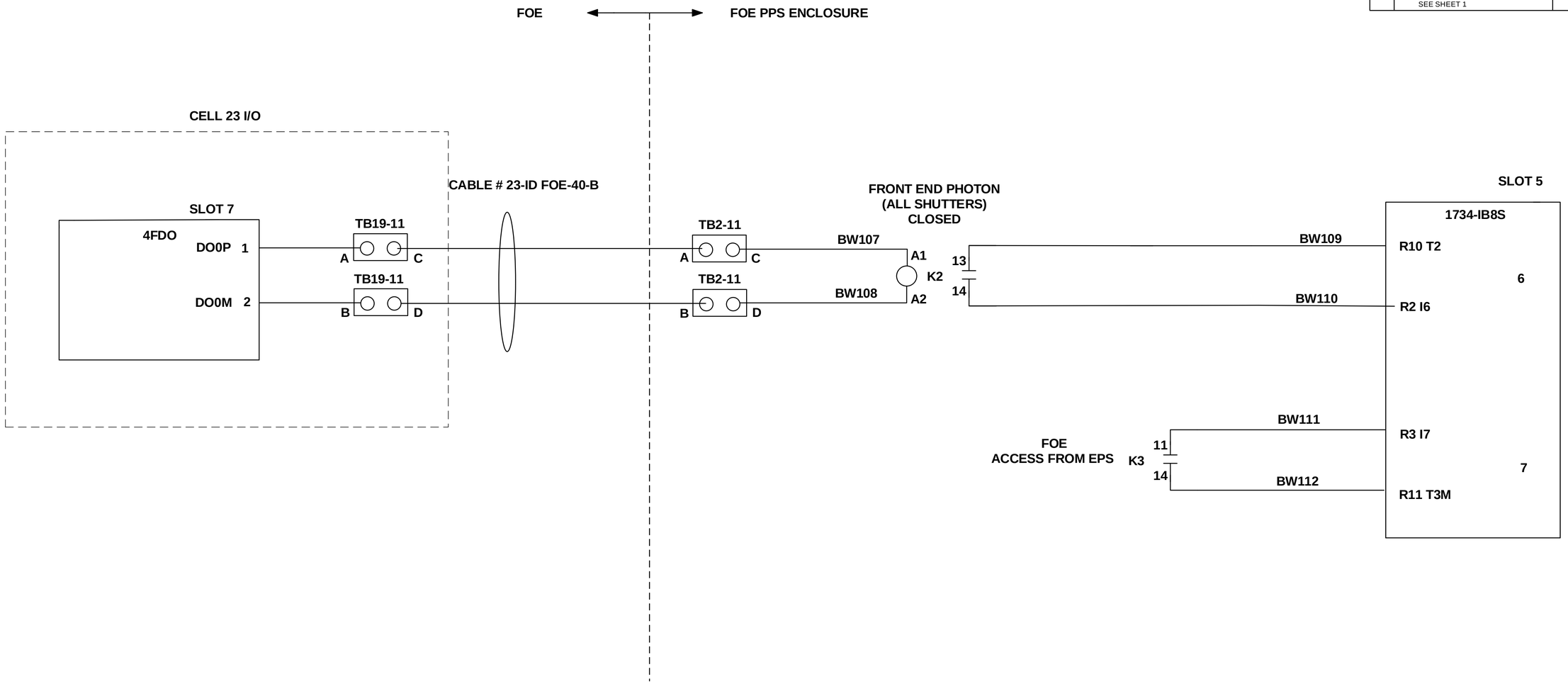

B

LT-EL-BL-EI	LT-EL-BL-EI-PPS-1230-91	F
DRAWING DIRECTORY	DRAWING NUMBER	REV

COMPUTER REPRODUCIBLE | SCALE: N/A | SHEET 27 OF 45

LT-EL-BL-EI-PPS-1230-91

REV	DESCRIPTION	DATE	BY	CHECKED	APP
	SEE SHEET 1				

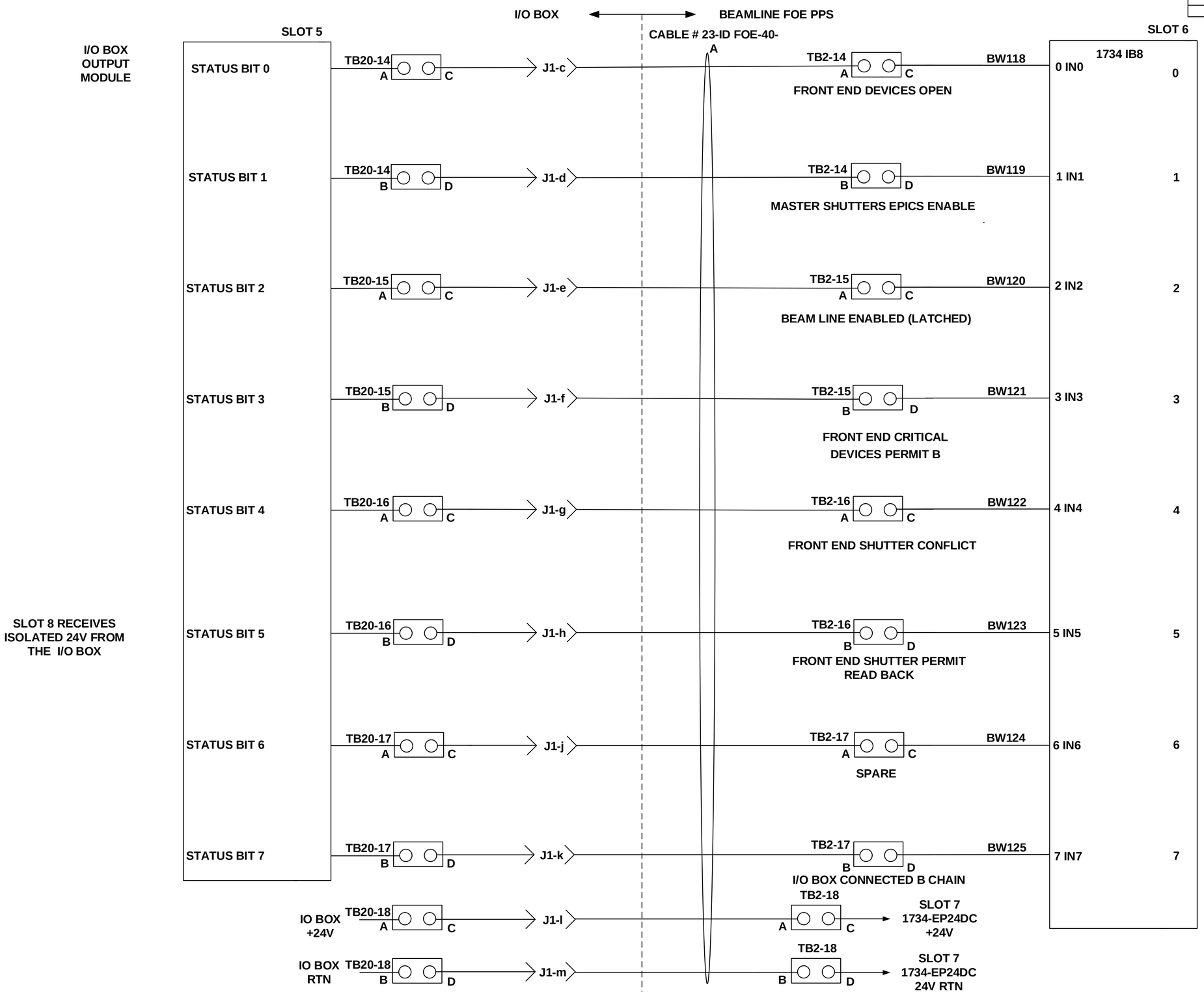

B

LT-EL-BL-EI-PPS-1230-91

LT-EL-BL-EI (DRAWING DIRECTORY)	LT-EL-BL-EI-PPS-1230-91 (DRAWING NUMBER)	F (REV)
COMPUTER REPRODUCIBLE	SCALE: N/A	SHEET 28 OF 45

REV	DESCRIPTION	DATE	BY	CHECKED	APP
	SEE SHEET 1				

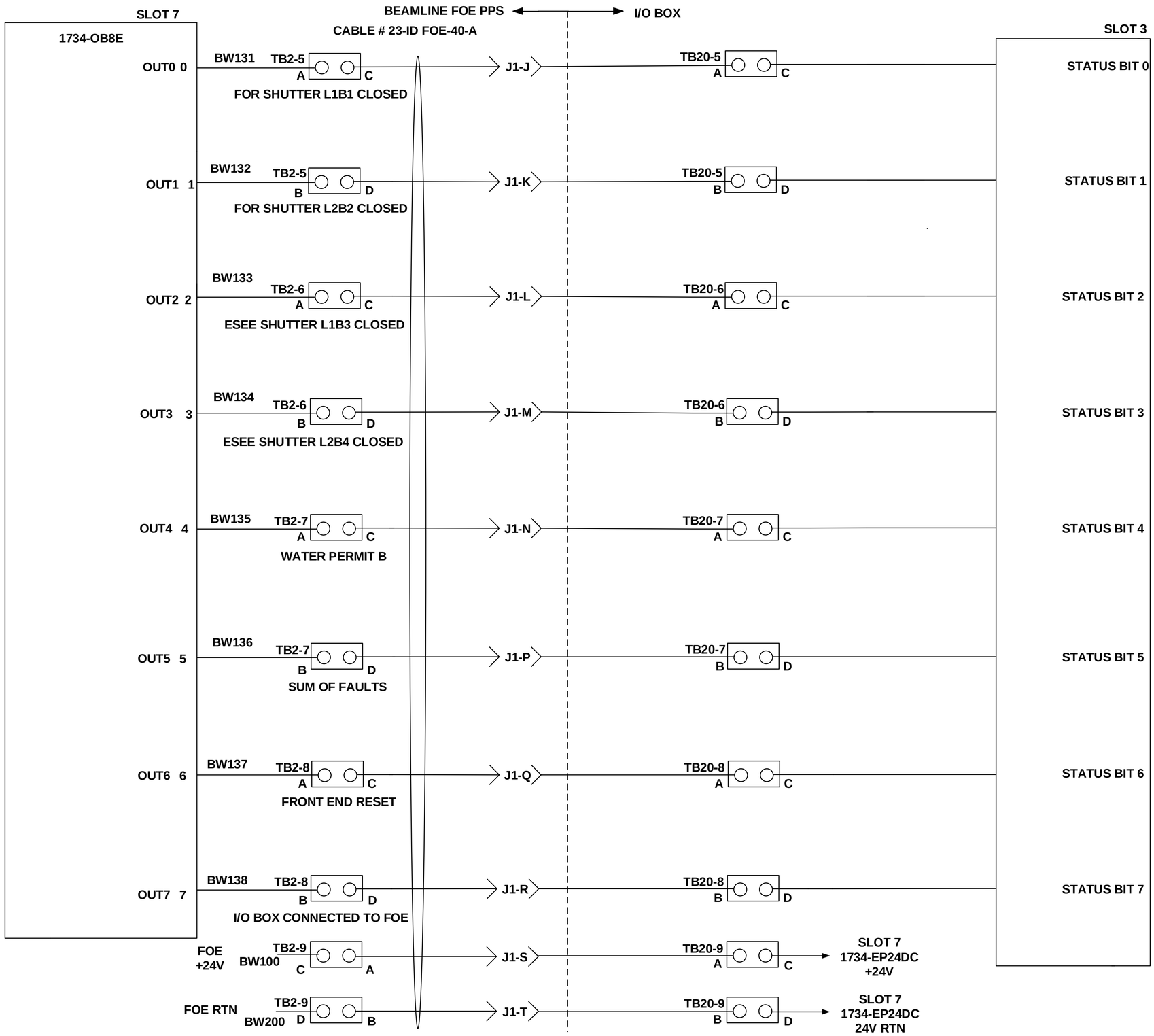

B

LT-EL-BL-EI-PPS-1230-91

LT-EL-BL-EI (DRAWING DIRECTORY)	LT-EL-BL-EI-PPS-1230-91 (DRAWING NUMBER)	F (REV)
COMPUTER REPRODUCIBLE	SCALE: N/A	SHEET 29 OF 45

REV	DESCRIPTION	DATE	BY	CHECKED	APP
	SEE SHEET 1				

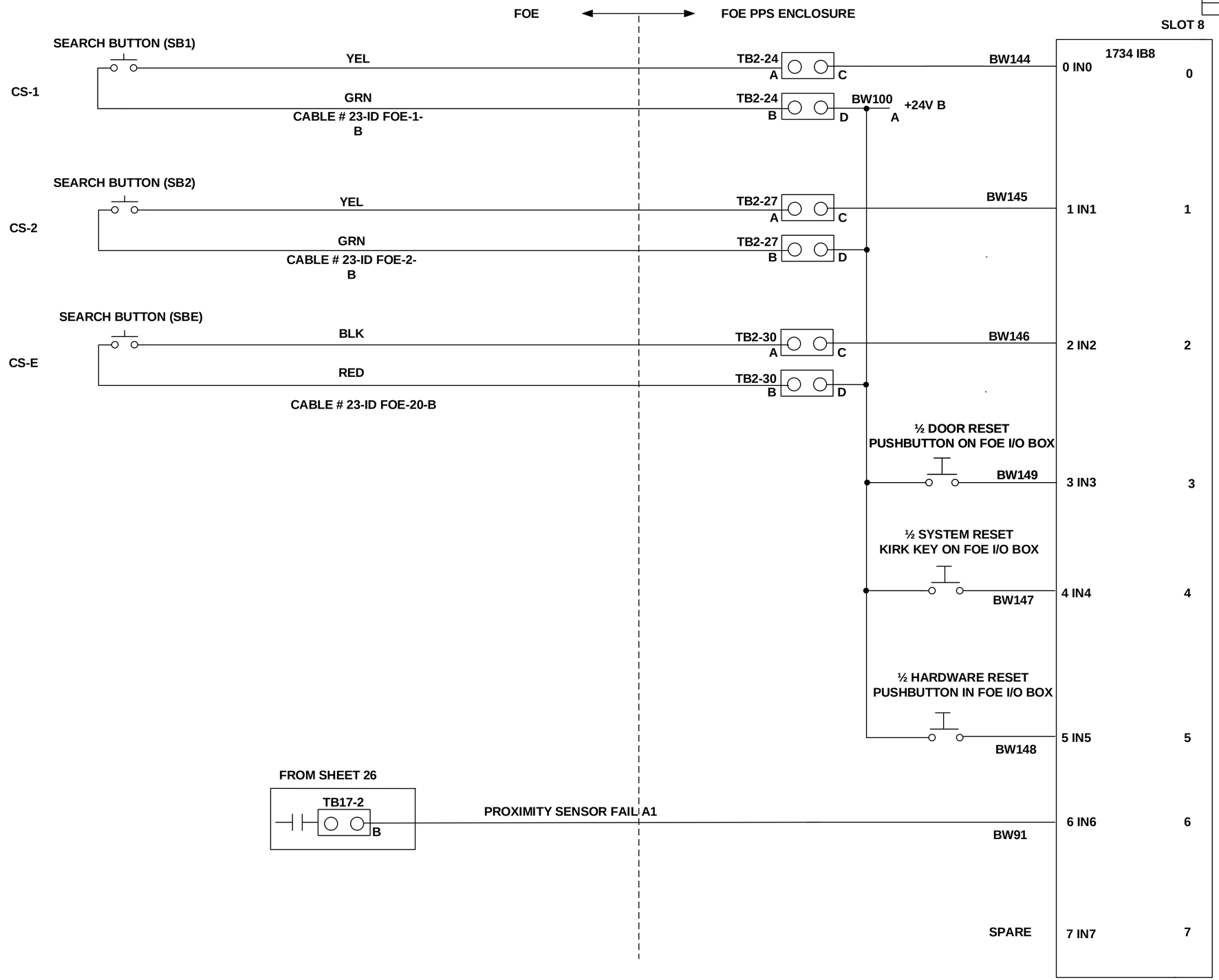

B

LT-EL-BL-EI-PPS-1230-91

LT-EL-BL-EI	LT-EL-BL-EI-PPS-1230-91	F
DRAWING DIRECTORY	DRAWING NUMBER	REV
COMPUTER REPRODUCIBLE	SCALE: N/A	SHEET 30 OF 45

REV	DESCRIPTION	DATE	BY	CHECKED	APP
	SEE SHEET 1				

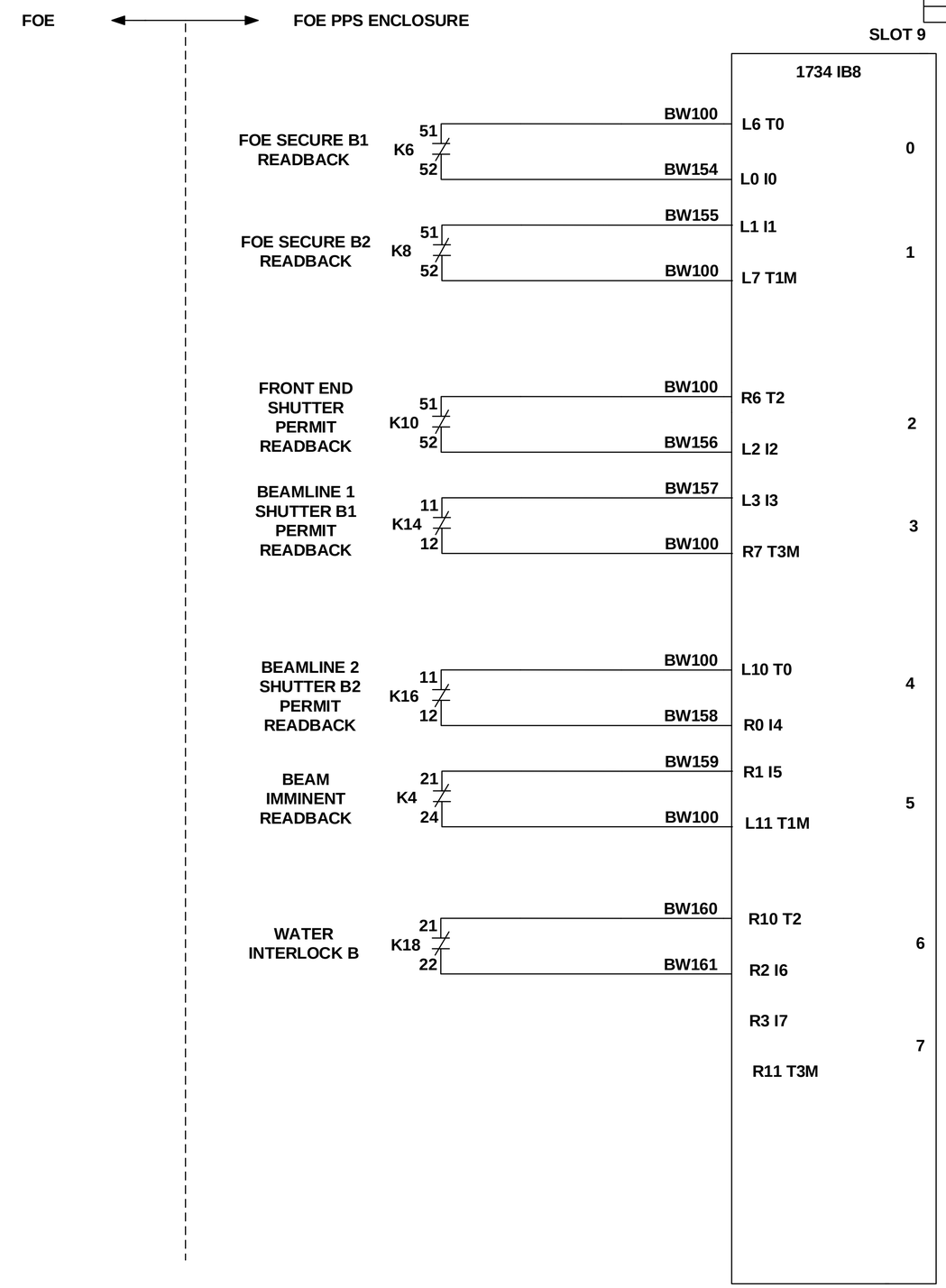

B

LT-EL-BL-EI-PPS-1230-91

LT-EL-BL-EI DRAWING DIRECTORY	LT-EL-BL-EI-PPS-1230-91 DRAWING NUMBER	F REV
COMPUTER REPRODUCIBLE	SCALE : N/A	SHEET 31 OF 45

REV	DESCRIPTION	DATE	BY	CHECKED	APP
	SEE SHEET 1				

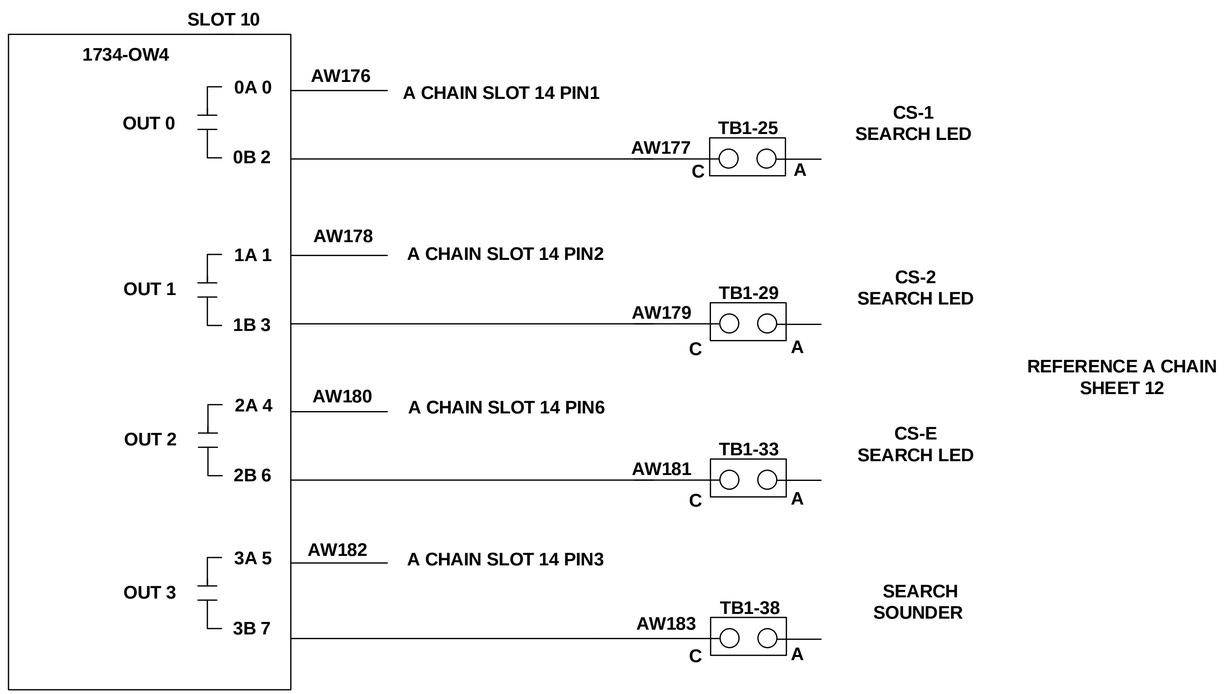

REFERENCE A CHAIN
SHEET 12

B

LT-EL-BL-EI-PPS-1230-91

LT-EL-BL-EI (DRAWING DIRECTORY)	LT-EL-BL-EI-PPS-1230-91 (DRAWING NUMBER)	F (REV)
COMPUTER REPRODUCIBLE	SCALE: N/A	SHEET 32 OF 45

REV	DESCRIPTION	DATE	BY	CHECKED	APP
	SEE SHEET 1				

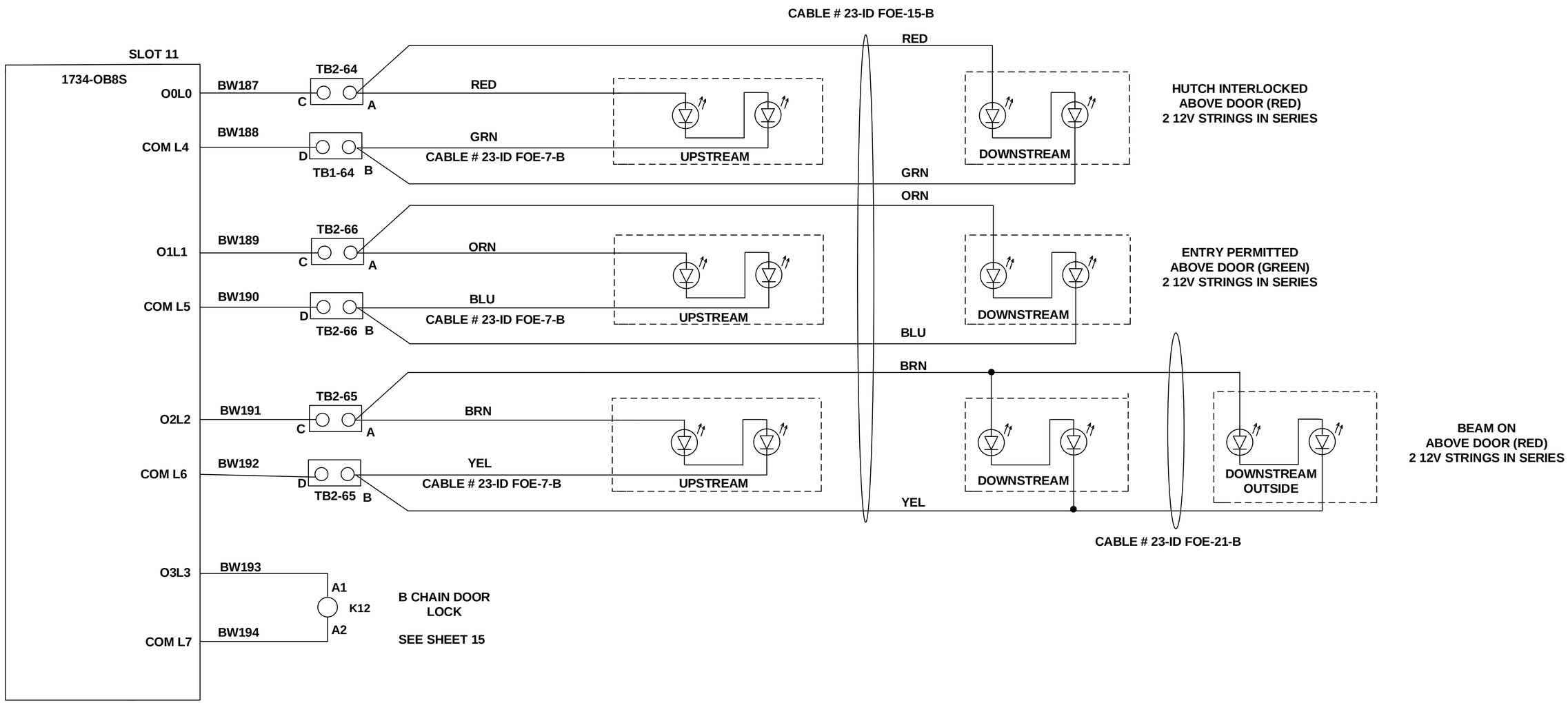

B

LT-EL-BL-EI (DRAWING DIRECTORY)	LT-EL-BL-EI-PPS-1230-91 (DRAWING NUMBER)	F (REV)
COMPUTER REPRODUCIBLE	SCALE: N/A	SHEET 33 OF 45

LT-EL-BL-EI-PPS-1230-91

REV	DESCRIPTION	DATE	BY	CHECKED	APP
	SEE SHEET 1				

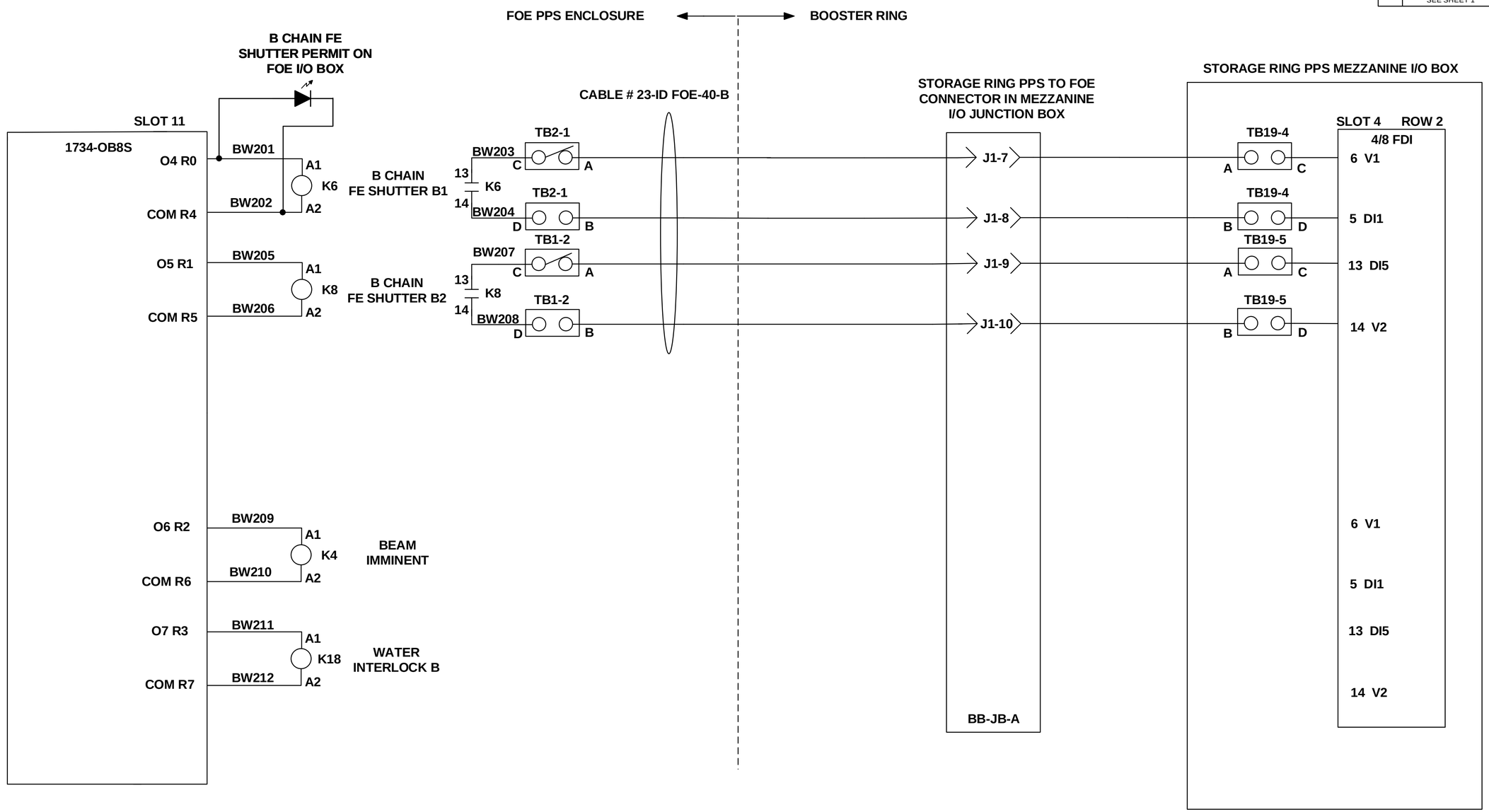

B

LT-EL-BL-EI-PPS-1230-91

LT-EL-BL-EI (DRAWING DIRECTORY)	LT-EL-BL-EI-PPS-1230-91 (DRAWING NUMBER)	E (REV)
COMPUTER REPRODUCIBLE	SCALE: N/A	SHEET 34 OF 45

REV	DESCRIPTION	DATE	BY	CHECKED	APP
	SEE SHEET 1				

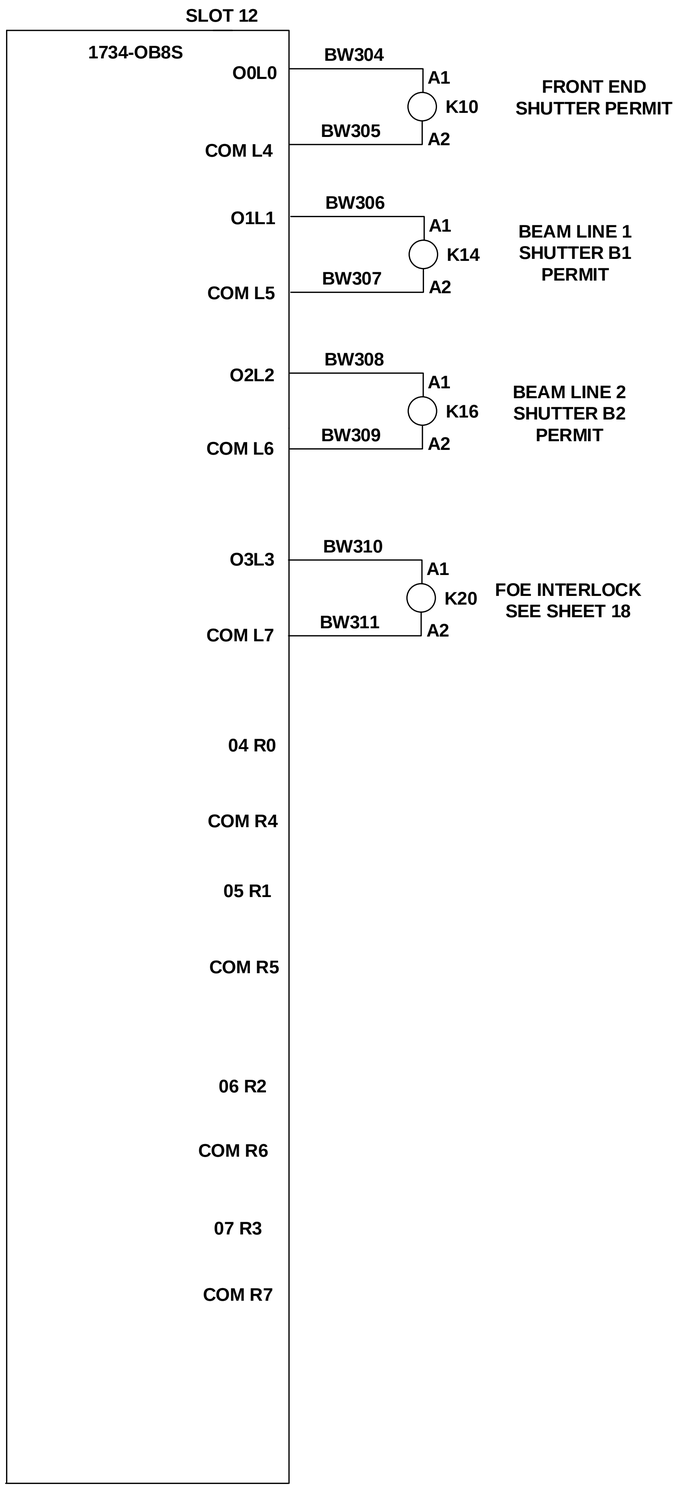

B

LT-EL-BL-EI-PPS-1230-91

LT-EL-BL-EI	LT-EL-BL-EI-PPS-1230-91	F
DRAWING DIRECTORY	DRAWING NUMBER	REV

COMPUTER REPRODUCIBLE | SCALE: N/A | SHEET 35 OF 45

REV	DESCRIPTION	DATE	BY	CHECKED	APP
	SEE SHEET 1				

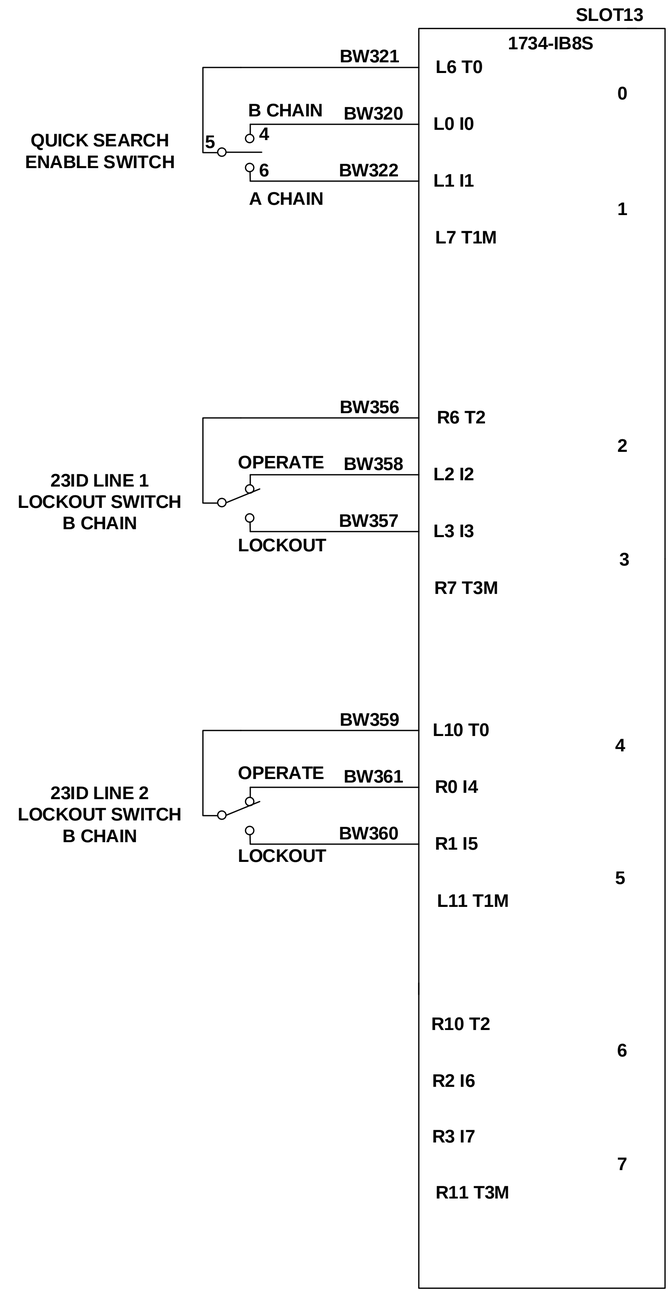

B

LT-EL-BL-EI-PPS-1230-91

LT-EL-BL-EI DRAWING DIRECTORY	LT-EL-BL-EI-PPS-1230-91 DRAWING NUMBER	F REV
COMPUTER REPRODUCIBLE	SCALE: N/A	SHEET 36 OF 45

REV	DESCRIPTION	DATE	BY	CHECKED	APP
	SEE SHEET 1				

B CHAIN
+24V WIRES ARE RED
24V RTN WIRES ARE BLK
SIGNAL WIRES ARE ORN

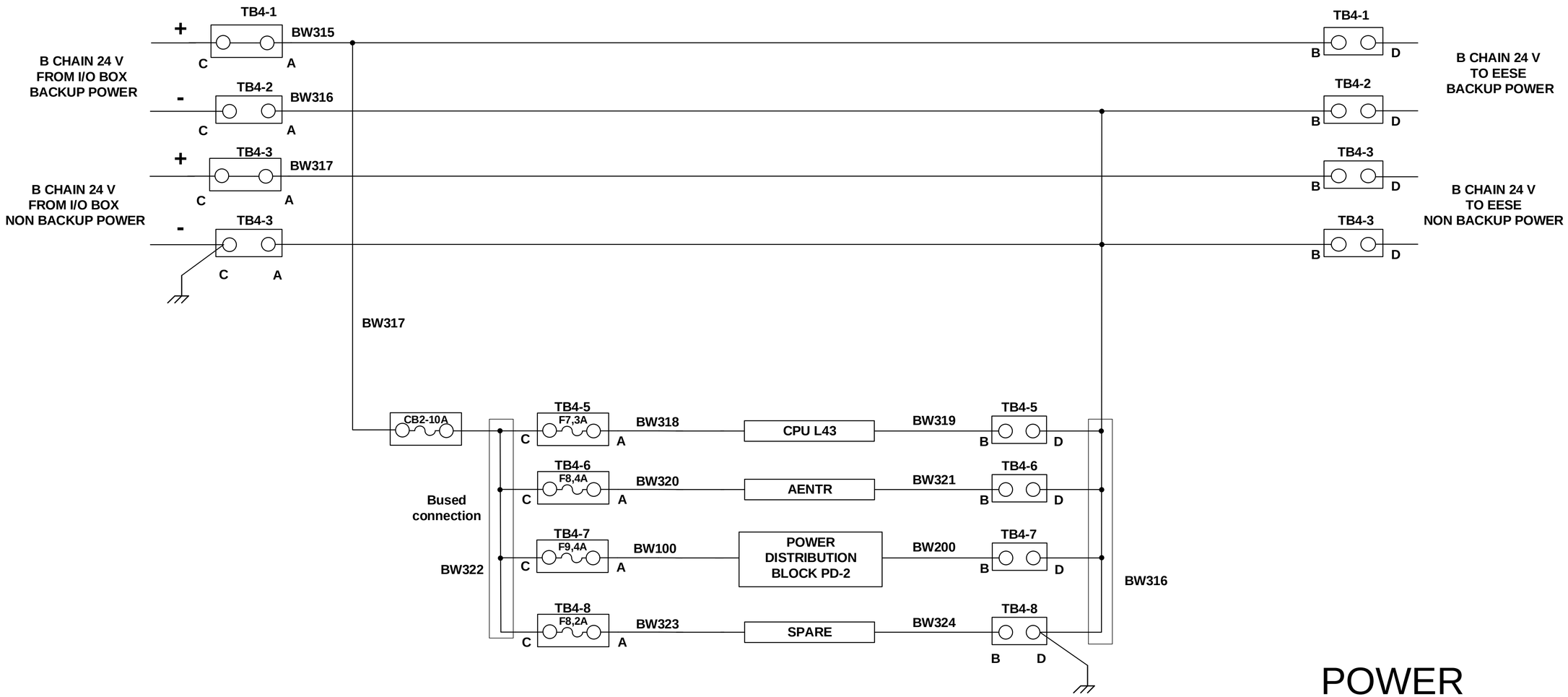

POWER DISTRIBUTION

B

LT-EL-BL-EI	LT-EL-BL-EI-PPS-1230-91	F
DRAWING DIRECTORY	DRAWING NUMBER	REV

COMPUTER REPRODUCIBLE | SCALE: N/A | SHEET 37 OF 45

LT-EL-BL-EI-PPS-1230-91

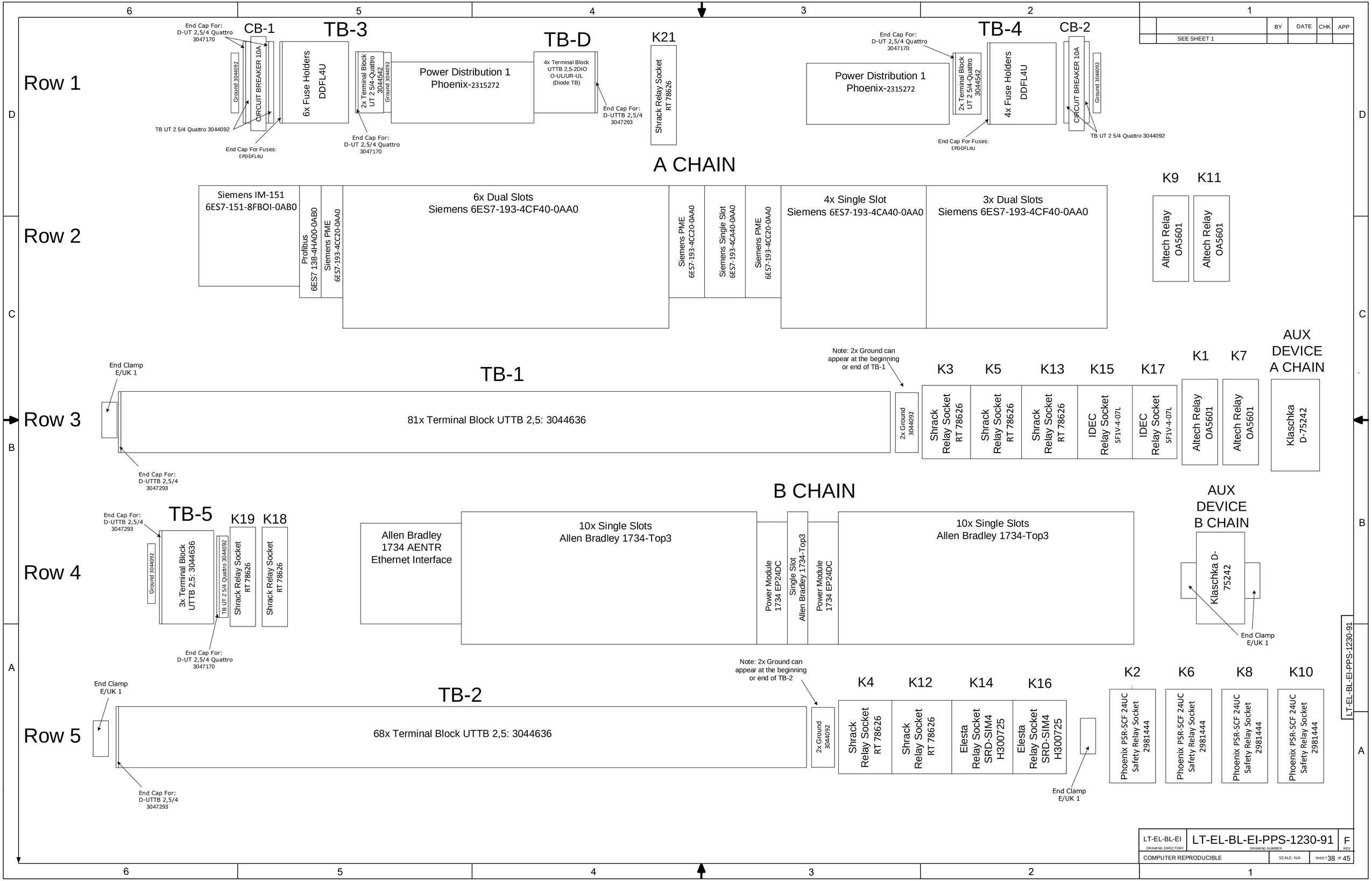
Row 1
Row 2
Row 3
Row 4
Row 5
A CHAIN
B CHAIN
CB-1
TB-3
TB-D
K21
TB-4
CB-2
End Cap For: D-UT 2,5/4 Quattro 3047170
Ground 3044092
CIRCUIT BREAKER 10A
6x Fuse Holders DDFL4U
2x Terminal Block UT 2 5/4-Quattro 3044542
Power Distribution 1 Phoenix-2315272
4x Terminal Block UTTB 2,5-2DIO O-UL/UR-UL (Diode TB)
End Cap For: D-UTTB 2,5/4 3047293
Shrack Relay Socket RT 78626
TB UT 2 5/4 Quattro 3044092
End Cap For Fuses: EPDDFL4U
Siemens IM-151 6ES7-151-8FBOI-0AB0
Profibus 6ES7 138-4HA00-0AB0
Siemens PME 6ES7-193-4CC20-0AA0
6x Dual Slots Siemens 6ES7-193-4CF40-0AA0
Siemens Single Slot 6ES7-193-4CA40-0AA0
4x Single Slot Siemens 6ES7-193-4CA40-0AA0
3x Dual Slots Siemens 6ES7-193-4CF40-0AA0
K9
K11
Altech Relay OA5601
End Clamp E/UK 1
TB-1
81x Terminal Block UTTB 2,5: 3044636
Note: 2x Ground can appear at the beginning or end of TB-1
2x Ground 3044092
K3
K5
K13
K15
K17
K1
K7
AUX DEVICE A CHAIN
Shrack Relay Socket RT 78626
IDEC Relay Socket SF1V-4-07L
Klaschka D-75242
TB-5
K19
K18
3x Terminal Block UTTB 2,5: 3044636
Allen Bradley 1734 AENTR Ethernet Interface
10x Single Slots Allen Bradley 1734-Top3
Power Module 1734 EP24DC
Single Slot Allen Bradley 1734-Top3
AUX DEVICE B CHAIN
TB-2
68x Terminal Block UTTB 2,5: 3044636
Note: 2x Ground can appear at the beginning or end of TB-2
K4
K12
K14
K16
Elesta Relay Socket SRD-SIM4 H300725
K2
K6
K8
K10
Phoenix PSR-SCF 24UC Safety Relay Socket 2981444
LT-EL-BL-EI-PPS-1230-91
LT-EL-BL-EI
DRAWING DIRECTORY
DRAWING NUMBER
F
REV
COMPUTER REPRODUCIBLE
SCALE: N/A
SHEET 38 OF 45
SEE SHEET 1
BY
DATE
CHK
APP

	BY	DATE	CHK	APP
SEE SHEET 1				

A CHAIN

ROW 1:					
SLOT	MODULE	SOCKET	DESCRIPTION	VENDOR	
	[2]				
	[11]				
	[7]				
1	WMZS1B10	N/A	CIRCUIT BREAKER 1	AUTOMATION DIRECT	
	[11]				
	[7]				
TB-3	[6]	1>6 [8]	[11]	7>8 [7]	[2]
2	2315272	N/A	PD-1	PHOENIX	
TBD	1>4	[3]			
3	2315272	N/A	PD-2	PHOENIX	
TB4	[11]	4>3 [7]	[6]	8>5 [8]	
	[7]				
4	WMZS1B10	N/A	CIRCUIT BREAKER 2	AUTOMATION DIRECT	
	[7]				
	[2]				
ROW 2:					
SLOT	MODULE	SOCKET	DESCRIPTION	VENDOR	
	6ES7-151-8FBOI-0AB0	N/A	IM-151	SIEMENS	
	6ES7-138-4HA00-0AB0	N/A	PROFIBUS-DP	SIEMENS	
1	6ES7-138-4CA50-0AB0	6ES7-193-4CC20-0AA0	POWER MODULE PM-E	SIEMENS	
2	6ES7-131-4BF00-0AB0	6ES7-193-4CF40-0AA0	8FDI	SIEMENS	
3	6ES7-131-4BF00-0AB0	6ES7-193-4CF40-0AA0	8FDI	SIEMENS	
4	6ES7-131-4BF00-0AB0	6ES7-193-4CF40-0AA0	8FDI	SIEMENS	
5	6ES7-131-4BF00-0AB0	6ES7-193-4CF40-0AA0	8FDI	SIEMENS	
6	6ES7-131-4BF00-0AB0	6ES7-193-4CF40-0AA0	8FDI	SIEMENS	
7	6ES7-131-4BF00-0AB0	6ES7-193-4CF40-0AA0	8FDI	SIEMENS	
8	6ES7-138-4CA50-0AB0	6ES7-193-4CC20-0AA0	POWER MODULE PM-E	SIEMENS	
9	6ES7-131-4BF00-0AB0	6ES7-193-4CA40-0AA0	8DI	SIEMENS	
10	6ES7-138-4CA50-0AB0	6ES7-193-4CC20-0AA0	POWER MODULE PM-E	SIEMENS	
11	6ES7-132-4BF00-0AA0	6ES7-193-4CA40-0AA0	8DO	SIEMENS	
12	6ES7-131-4BF00-0AB0	6ES7-193-4CA40-0AA0	8DI	SIEMENS	
13	6ES7-131-4BF00-0AB0	6ES7-193-4CA40-0AA0	8DI	SIEMENS	
14	6ES7-132-4BF00-0AA0	6ES7-193-4CA40-0AA0	8DO	SIEMENS	
15	6ES7-138-4FB03-0AA0	6ES7-193-4CF40-0AA0	4DO	SIEMENS	
16	6ES7-138-4FB03-0AA0	6ES7-193-4CF40-0AA0	4DO	SIEMENS	
17	6ES7-138-4FB03-0AA0	6ES7-193-4CF40-0AA0	4DO	SIEMENS	
K9	OA5601		ALTECH RELAY	BNL	
K11	OA5601		ALTECH RELAY	BNL	

LT-EL-BL-EI-PPS-1230-91

ROW 3:					
TB 1	[5]	[2]	[2]	[3]	1>81 [1]
RELAY	MODULE	SOCKET	DESCRIPTION	VENDOR	
K3	OW5669.12/983/61	RT 78626	RELAY	SHRACK	
K5	OW5669.12/983/61	RT 78626	RELAY	SHRACK	
K13	OW5669.12/983/61	RT 78626	RELAY	SHRACK	
K15	RF1V-3A1BL-D24	SF1V-4-07L	RELAY	IDEC	
K17	RF1V-3A1BL-D24	SF1V-4-07L	RELAY	IDEC	
K1	OA5601		ALTECH RELAY	BNL	
K7	OA5601		ALTECH RELAY	BNL	
	D-75242	N/A	AUX DEVICE A CHAIN	KLASCHKA	
ROW 4:					
	[2]				
TB 5	[3]	1>3 [1]	[11]	4 [7]	
K19	OW5669.12/983/61	RT 78626	RELAY	SHRACK	
K18	OW5669-12/983/61	RT 78626	RELAY	SHRACK	
SLOT	MODULE	SOCKET	DESCRIPTION	VENDOR	
	1734-AENTR	N/A	24V DC EHTERNET ADAPTER	AB	
1	1734-IB8S	1734-TOP3	8 INPUT SAFETY	AB	
2	1734-IB8S	1734-TOP3	8 INPUT SAFETY	AB	
3	1734-IB8S	1734-TOP3	8 INPUT SAFETY	AB	
4	1734-IB8S	1734-TOP3	8 INPUT SAFETY	AB	
5	1734-IB8S	1734-TOP3	8 INPUT SAFETY	AB	
	1734-EP24DC	N/A	POWER MODULE PM-E	AB	
6	1834-IB8	1734-TOP3	STANDARD INPUT MODULE	AB	
	1734-EP24DC	N/A	POWER MODULE PM-E	AB	
7	1734-OB8E	1734-TOP3	8 CURRENT SOURCE	AB	
8	1734-IB8	1734-TOP3	STANDARD INPUT MODULE	AB	
9	1734-IB8	1734-TOP3	STANDARD INPUT MODULE	AB	
10	1734-OW4	1734-TOP3	4 FORM RELAY MODULE	AB	
11	1734-OB8S	1734-TOP3	8 INPUT SAFETY	AB	
12	1734-OB8S	1734-TOP3	8 INPUT SAFETY	AB	
13	1734-OB8S	1734-TOP3	8 INPUT SAFETY	AB	
	[5]				
	D-75242	N/A	AUX DEVICE A CHAIN	KLASCHKA	
	[5]				
ROW 5:					
TB-2	[5]	[3]	1>68 [1]	[2]	[2]
RELAY	MODULE	SOCKET	DESCRIPTION	VENDOR	
K4	OW5669.12/983/61	RT 78626	RELAY	SHRACK	
K12	OW5669.12/983/61	RT 78626	RELAY	SHRACK	
K14	H300725	N/A	SRD-SIM4 RELAY	ELESTA	
K16	H300725	N/A	SRD-SIM4 RELAY	ELESTA	
	[5]				
K2	2981444	N/A	PSR-SCF 24UC SAFETY RELAY	PHOENIX	
K6	2981444	N/A	PSR-SCF 24UC SAFETY RELAY	PHOENIX	
K8	2981444	N/A	PSR-SCF 24UC SAFETY RELAY	PHOENIX	
K10	2981444	N/A	PSR-SCF 24UC SAFETY RELAY	PHOENIX	

RT 78626

	BY	DATE	CHK	APP
SEE SHEET 1				

LT-EL-BL-EI-PPS-1230-91

LT-EL-BL-EI (DRAWING DIRECTORY) | LT-EL-BL-EI-PPS-1230-91 (DRAWING NUMBER) | F (REV)

COMPUTER REPRODUCIBLE | SCALE: N/A | SHEET 40 OF 45

	BY	DATE	CHK	APP
SEE SHEET 1				

Paired part numbers are color coordinated.

COLOR	PROD #	TYPE
[1]	3044636	Double-level terminal block - UTTB 2,5
[2]	3044092	GROUND
[3]	3047293	End cover - D-UTTB 2,5/4
[4]	3047303	Spacer plate - DP-UTTB 2,5/4
[5]	1201413	End clamp - E/UK 1
[6]	EPDDFL4U	End Plate; Term Blk; DIN Rail; Gray;
[7]	3044542	DIN Rail Terminal Blocks UT 2 5/4-QUATTRO
[8]	DDFL-4U	24V FUSES
[9]	3044076	Feed-through terminal block - UT 2,5
[10]	3047028	End cover - D-UT 2,5/10
[11]	3047170	End cover - D-UT 2,5/4-QUATTRO
[12]	3044102	Feed-through terminal block - UT 4
[13]	2775016	Feed-through terminal block - UDK 4
[14]	KN-TL-14	KONNECT IT 3 CIRCUIT TERMINAL BLOCK
[15]	KN-EC-TL	3 CIRCUIT TERMINAL BLOCK COVER
[16]	CDL4U(E)DD2	99321 ALTECH DIODE TERMINAL BLOCK
[17]	EPCDL4U	ALTECH DIODE TB END COVER
[18]	3044636	Diode TB - UTTB 2,5 O-UL/UR-UL

SEE SHEET 1

[1]

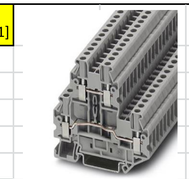

[2]

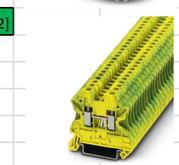

[3]

[4]

[5]

[6]

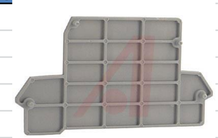

[7]

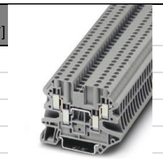

[8]

[9]

[10]

[11]

[12]

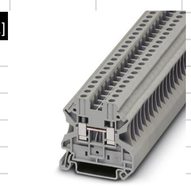

[13]

[14]

[15]

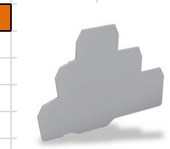

[16]

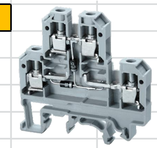

[17]

[18]

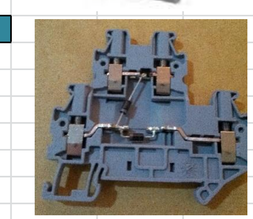

LT-EL-BL-EI-PPS-1230-91

LT-EL-BL-EI (DRAWING DIRECTORY)	LT-EL-BL-EI-PPS-1230-91 (DRAWING NUMBER)	F (REV)
COMPUTER REPRODUCIBLE	SCALE: N/A	SHEET 41 OF 45

	BY	DATE	CHK	APP
SEE SHEET 1				

FOE PPS_EPS MAIN BOX

TB 1

9x Terminal Block
UDK4: 2775016

Siemens
Scalance XB005

Siemens
CM 1241-RS232

Siemens Simatic
S7-1200-CPU-1214c

Siemens
SM 122 RLY

Siemens
SM 1223 DC/RLY

MOXA Nport IA5-250A

Siemens
Scalance XB005

Allen Bradley
Power Supply
1768-PB3 A

Allen Bradley Ethernet/IP
Communication Interface
1768 ENBT/A

Allen Bradley Ethernet/IP
Communication Interface
1768 ENBT/A

Allen Bradley
Compact Guard Logix
1768-L43S/B

Allen Bradley
End Cap 1769-ECR

Push Button GCX1114
With
Front Fixing Adapter
M22-IVS

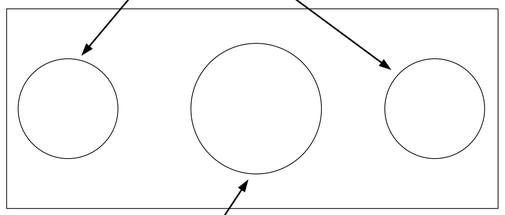

Magnet Door
Test Port

LT-EL-BL-EI-PPS-1230-91

LT-EL-BL-EI (DRAWING DIRECTORY)	LT-EL-BL-EI-PPS-1230-91 (DRAWING NUMBER)	F (REV)
COMPUTER REPRODUCIBLE	SCALE : N/A	SHEET 42 OF 45

	BY	DATE	CHK	APP
SEE SHEET 1				

23ID FOE Cable list

CABLE Num.	CHAIN	From LOCATION	To LOCATION	CONDUCTORS Needed
ID23FOE-1-A	A	FOE	CS1&Emergency stop	8
ID23FOE-1-B	B	FOE	CS1&Emergency stop	8
ID23FOE-2-A	A	FOE	CS2&Emergency stop	8
ID23FOE-2-B	B	FOE	CS2&Emergency stop	8
ID23FOE-3-A	A	FOE	Emergency Entrance E-Stop	4
ID23FOE-3-B	B	FOE	Emergency Entrance E-Stop	4
ID23FOE-4-A	A	FOE	Down Stream Left&Right Door Switches	8
ID23FOE-4-B	B	FOE	Down Stream Left&Right Door Switches	8
ID23FOE-5-A	A	FOE	Up Stream Left Door Switch	4
ID23FOE-5-B	B	FOE	Up Stream Left Door Switch	4
ID23FOE-6-A	A	FOE	Down Stream Left&Right Mag Lock Switch	4
ID23FOE-6-B	B	FOE	Down Stream Left&Right REED Switch	4
ID23FOE-7-A	A	FOE	UP Stream Left Door MagLock Switch& Interlock, entry permit, Beam On Lights	2
ID23FOE-7-B	B	FOE	Up Stream Left Door Reed Switch&Interlock, entry Permit, Beam on lights	2
ID23FOE-8-A	A	FOE	Cable Labyrinth1 Door Latch A Chain	2
ID23FOE-8-B	B	FOE	Cable Labyrinth1 Door Latch B Chain	2
ID23FOE-8-A	A	FOE	Cable Labyrinth1 Door Switch A Chain	4
ID23FOE-8-B	B	FOE	Cable Labyrinth1 Door Switch B Chain	4
ID23FOE-9-A	A	FOE	Photon shutter L1A1 Proximity sensor	2
ID23FOE-9-B	B	FOE	Photon shutter L1B1 Proximity sensor	2
ID23FOE-10-A	A	FOE	Photon shutter L2A2 Proximity sensor	2
ID23FOE-10-B	B	FOE	Photon shutter L2B2 Proximity sensor	2
ID23FOE-11-A	A	FOE	Photon shutter L1A1 Closed and OPEN Switch	4
ID23FOE-11-B	B	FOE	Photon shutter L1B1 Closed and Open Switch	4
ID23FOE-12-A	A	FOE	Photon shutter L2A2 Closed and OPEN Switch	4
ID23FOE-12-B	B	FOE	Photon shutter L2B2 Closed and Open Switch	4
ID23FOE-13-A	A	FOE	Search Sounder and Becon	2
ID23FOE-13-B	B	FOE	SPARE	
ID23FOE-14-A	A	FOE	OverHead Lights, Beacon and Sounders	
ID23FOE-14-B	B	FOE	SPARE	
ID23FOE-15-A	A	FOE	Down Stream A Chain Interlock, Entry Permit, Beam lights	6
ID23FOE-15-B	B	FOE	Down Stream B Chain Interlock, Entry Permit, Beam lights	6
ID23FOE-16-A	A	FOE	Down Stream LEFT&Right Door MagLOCK Coil	4
ID23FOE-16-B	B	FOE	SPARE	
ID23FOE-17-A	A	FOE	UP Stream LEFT Door Maglock Coil	2
ID23FOE-17-B	B	FOE	SPARE	
ID23FOE-18-A	A	FOE	Beam line shutter L1A1, L2A2 solenoid	4
ID23FOE-18-B	B	FOE	Beam line shutter L1B1, L2B2 solenoid	4
ID23FOE-19-A	A	FOE	SPARE	4
ID23FOE-19-B	B	FOE	SPARE	
ID23FOE-20-A	A	FOE	SPARE	
ID23FOE-20-B	B	FOE	SPARE	
ID23FOE-21-A	A	FOE	Beam ON Sign for ESEE	2
ID23FOE-21-B	B	FOE	SPARE	
SPARES				
ID23FOE-40-A	A	FOE	Storage Ring PPS	39
ID23FOE-40-B	B	FOE	Storage Ring PPS	39
SPARES				

LT-EL-BL-EI-PPS-1230-91

LT-EL-BL-EI DRAWING DIRECTORY	LT-EL-BL-EI-PPS-1230-91 DRAWING NUMBER	F REV
COMPUTER REPRODUCIBLE	SCALE: N/A	SHEET 43 OF 45

REV	DESCRIPTION	BY	DATE	CHK	APP
	SEE SHEET 1				

ID BEAM LINE 24 V POWER
LOCATED IN MEZZANINE I/O BOX

A CHAIN ID POWER

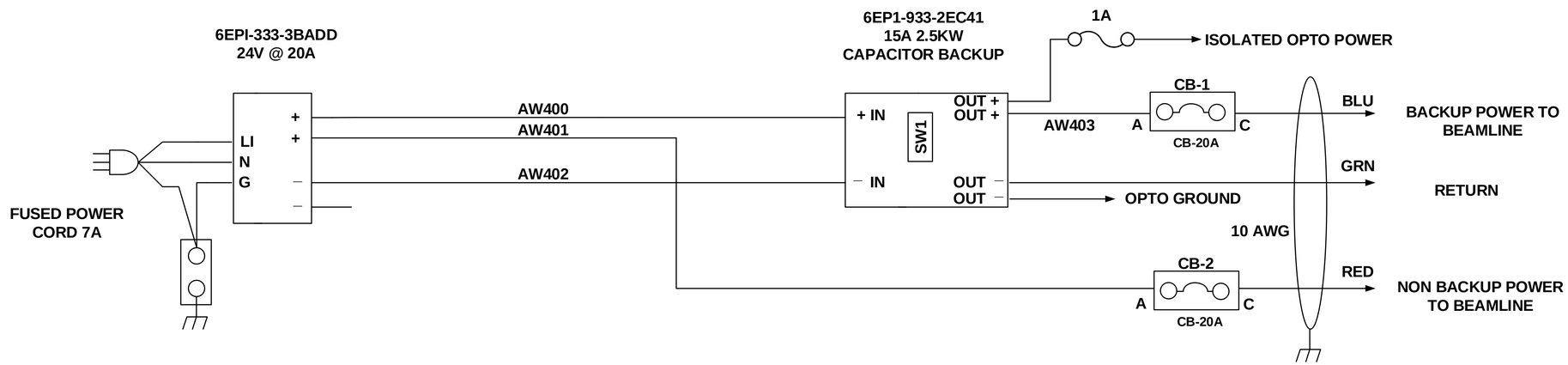

BACKUP SW SETTINGS
SW1

1	X	
2		X
3		X
4	X	
5	X	
6	X	
7	X	
8	X	
9	X	
10	X	
11		X
12	X	

B CHAIN ID POWER

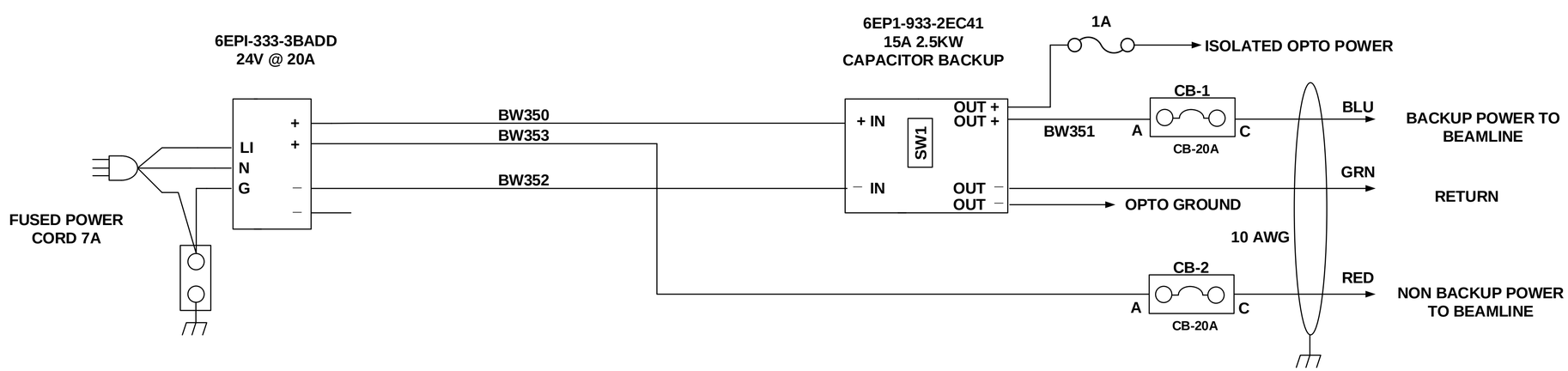

LT-EL-BL-EI-PPS-1230-91

LT-EL-BL-EI DRAWING DIRECTORY	LT-EL-BL-EI-PPS-1230-91 DRAWING NUMBER	F REV
COMPUTER REPRODUCIBLE	SCALE: N/A	SHEET 44 OF 45

REV	DESCRIPTION	BY	DATE	CHK	APP
	SEE SHEET 1				

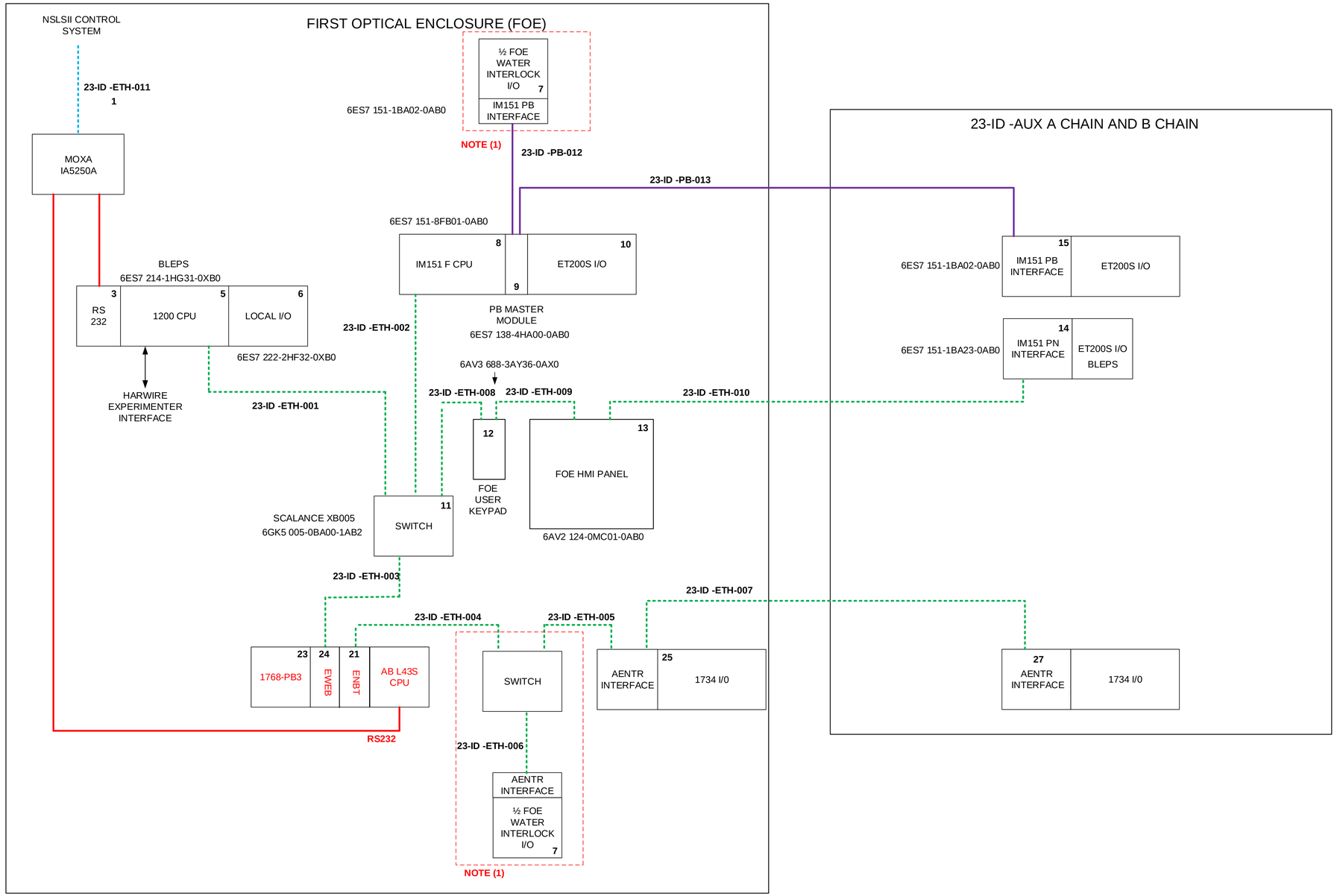

ETHERNET FRONT END SAFETY SUBNET

ETHERNET BEAMLINE SUBNET

PROFIBUS

RS 232

LT-EL-BL-EI-PPS-1230-91

LT-EL-BL-EI DRAWING DIRECTORY	LT-EL-BL-EI-PPS-1230-91 DRAWING NUMBER	F REV
COMPUTER REPRODUCIBLE	SCALE: N/A	SHEET 45 OF 45

REV	DESCRIPTION	DATE	BY	CHECKED	APP
A	INITIAL RELEASE	9/04/2014	SEJ	JM	SB
B	REVISED PER ECN LT-ECN-018-1880	12/26/2017	SEJ	JM	SB

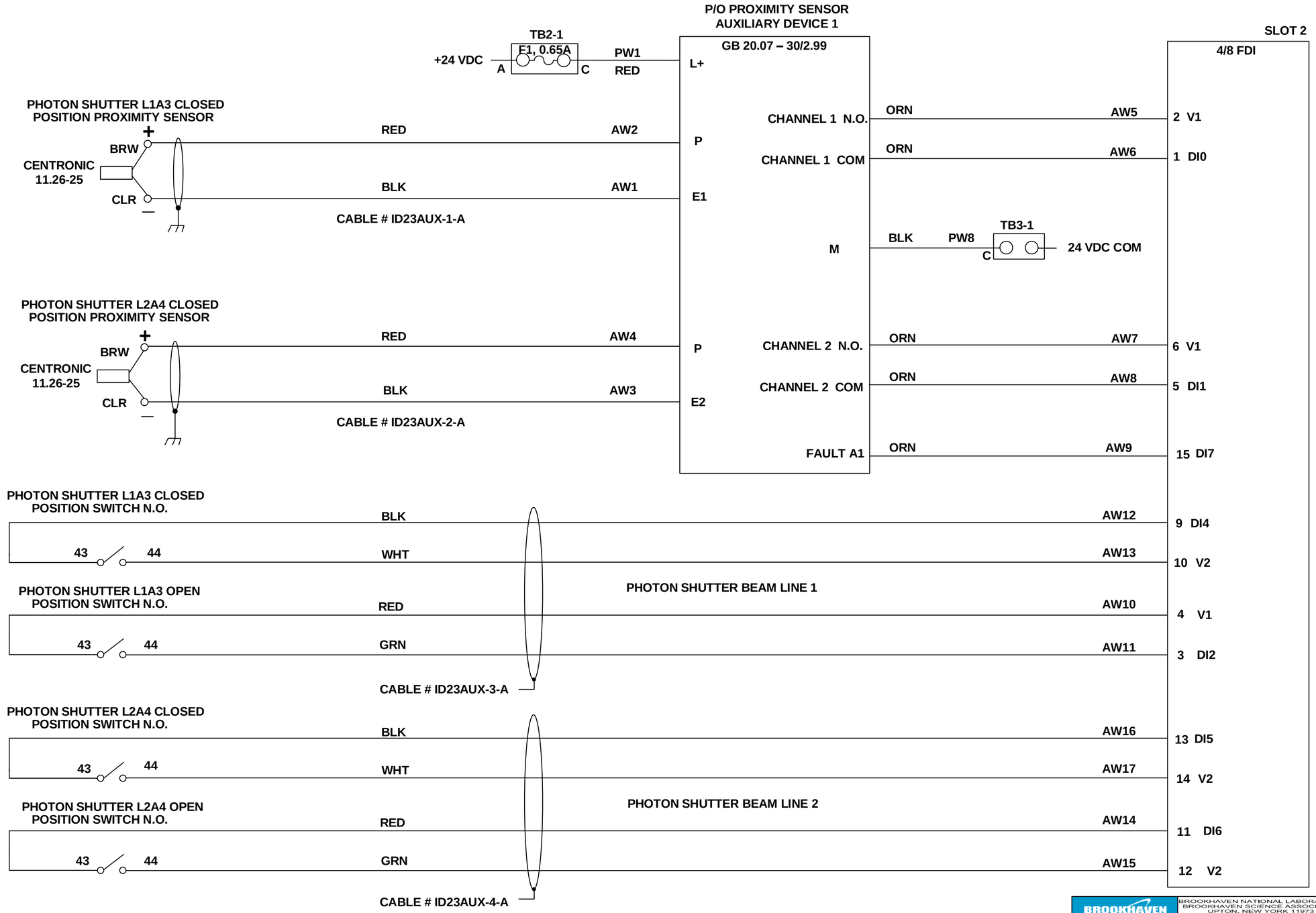

A

LT-EL-BL-EI-PPS-1230-90

BROOKHAVEN NATIONAL LABORATORY

BROOKHAVEN NATIONAL LABORATORY
BROOKHAVEN SCIENCE ASSOCIATES
UPTON, NEW YORK 11973
Exploring Life's Mysteries, Protecting Its Future

NSLSII NATIONAL SYNCHROTRON LIGHT SOURCE II

UNLESS OTHERWISE SPECIFIED
INTEGER TOLERANCES ± .06
DECIMAL TOLERANCES
.X ± .030
.XX ± .015
.XXX ± .010
ANGULAR TOLERANCE ± 0.5°
UNSPECIFIED RADII .02 MAX
125 BREAK SHARP CORNERS AND EDGES
FINISH MAX .03 MIN .005

UNLESS OTHERWISE SPECIFIED DIMENSIONS ARE IN INCHES DIMENSIONS IN [**] ARE MILLIMETERS EQUIV. FOR REF. ONLY

ESH&Q RISK LEVEL A-1

INTERPRET DRAWING AS PER ANSI Y14.5 OR Y32.2

OUTSTANDING ECN'S

		DATE
DRWN BY	S. JARZABKOWSKI	9/04/2014
CHK BY	J.MALLEY	9/04/2014
ENG APP	S. BUDA	9/04/2014
SUPV APP	G. GANETIS	9/06/2014
QA APP	E.CHESWICK	9/05/2014
ESH APP	R. LEE	9/05/2014

JOB NUMBER | USED ON DWG. NO.

WIRING DIAGRAM, 23-ID-AUX (CSX-AUX) A CHAIN AND B CHAIN

LT-EL-BL-EI — DRAWING DIRECTORY
LT-EL-BL-EI-PPS-1230-90 — DRAWING NUMBER
B — REV

COMPUTER REPRODUCABLE | SCALE: N/A | SHEET 1 OF 17

REV	DESCRIPTION	DATE	BY	CHECKED	APP
	SEE SHEET 1				

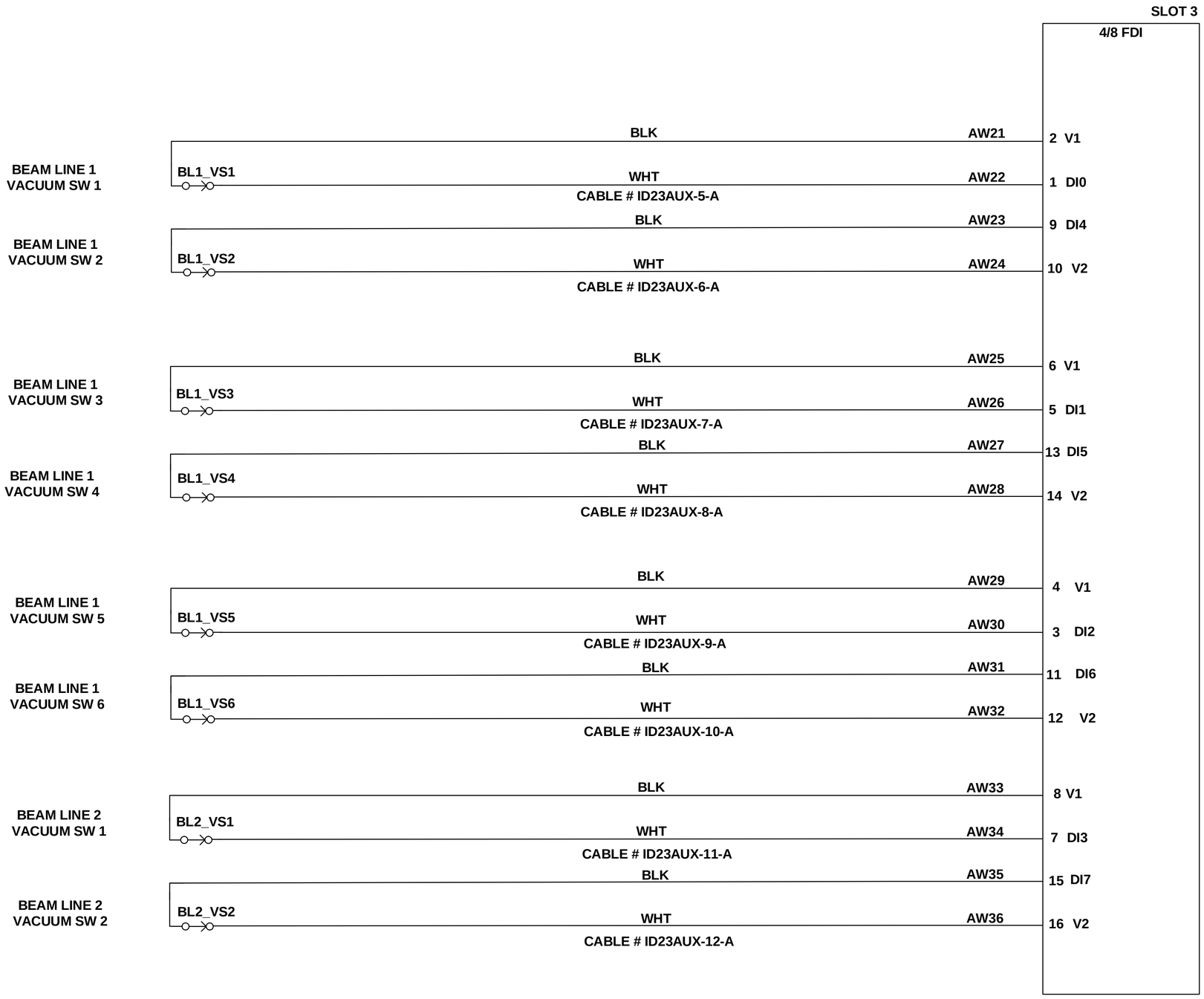

NOTES:

1. VACUUM SWITCHES ARE CLOSED WHEN BEAMLINE IS SAFE.

A

LT-EL-BL-EI (DRAWING DIRECTORY)	LT-EL-BL-EI-PPS-1230-90 (DRAWING NUMBER)	B (REV)
COMPUTER REPRODUCABLE	SCALE: N/A	SHEET 2 OF 17

LT-EL-BL-EI-PPS-1230-90

REV	DESCRIPTION	DATE	BY	CHECKED	APP
	SEE SHEET 1				

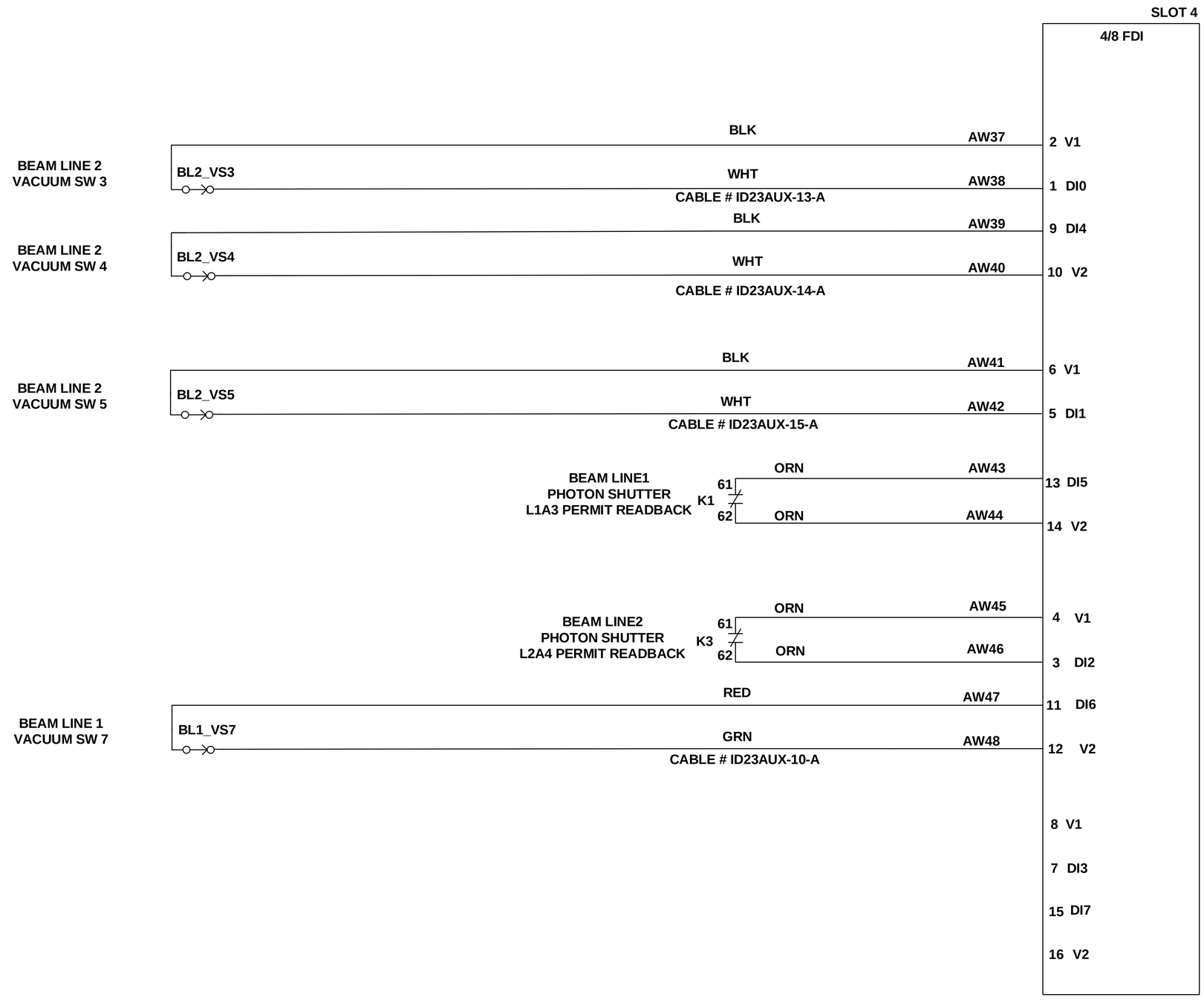

A

LT-EL-BL-EI	LT-EL-BL-EI-PPS-1230-90	B
DRAWING DIRECTORY	DRAWING NUMBER	REV

COMPUTER REPRODUCABLE | SCALE: N/A | SHEET 3 OF 17

LT-EL-BL-EI-PPS-1230-90

REV	DESCRIPTION	DATE	BY	CHECKED	APP
	SEE SHEET 1				

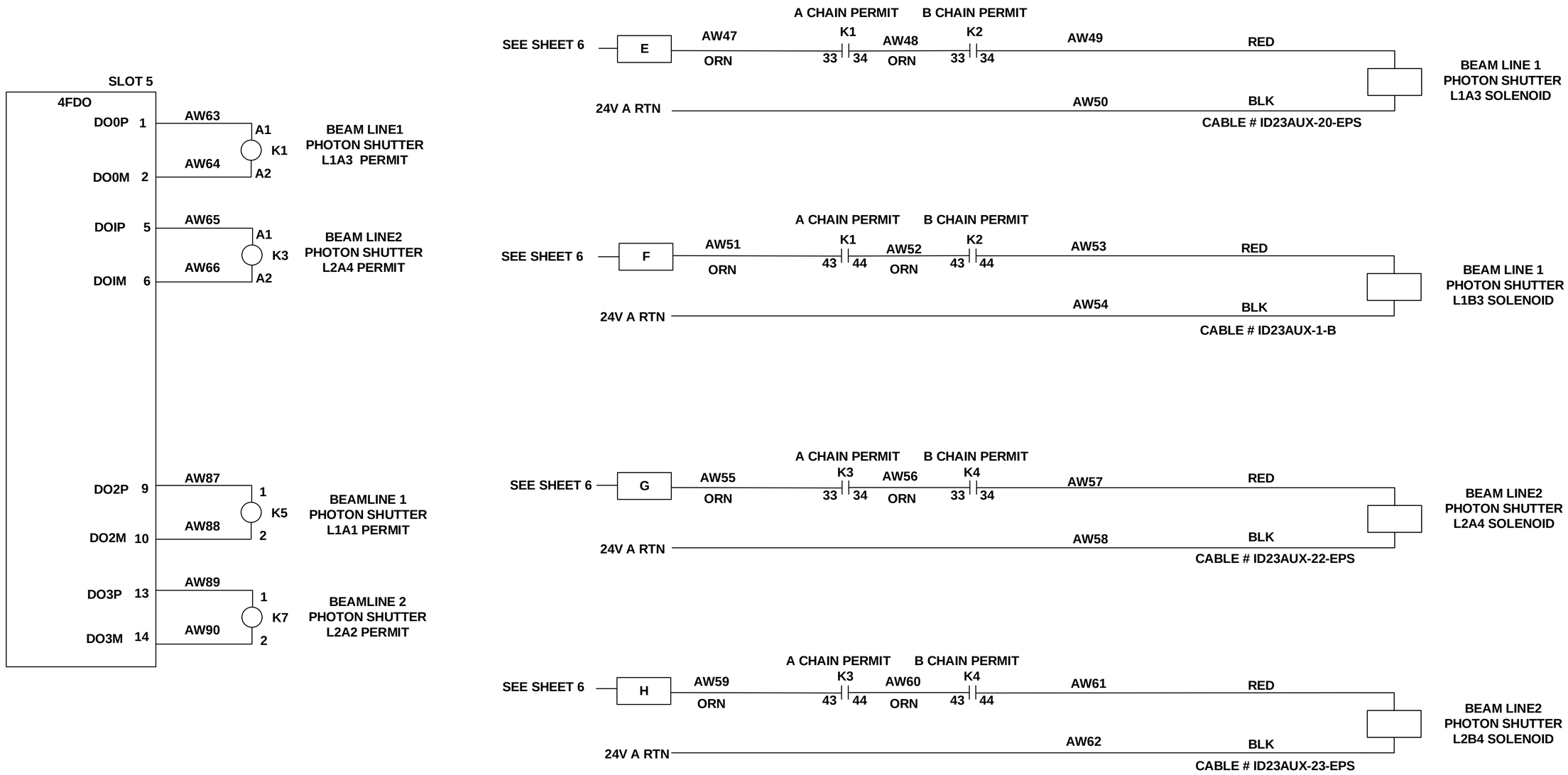

A

LT-EL-BL-EI (DRAWING DIRECTORY)	LT-EL-BL-EI-PPS-1230-90 (DRAWING NUMBER)	B (REV)
COMPUTER REPRODUCABLE	SCALE: N/A	SHEET 4 OF 17

LT-EL-BL-EI-PPS-1230-90

REV	DESCRIPTION	DATE	BY	CHECKED	APP
	SEE SHEET 1				

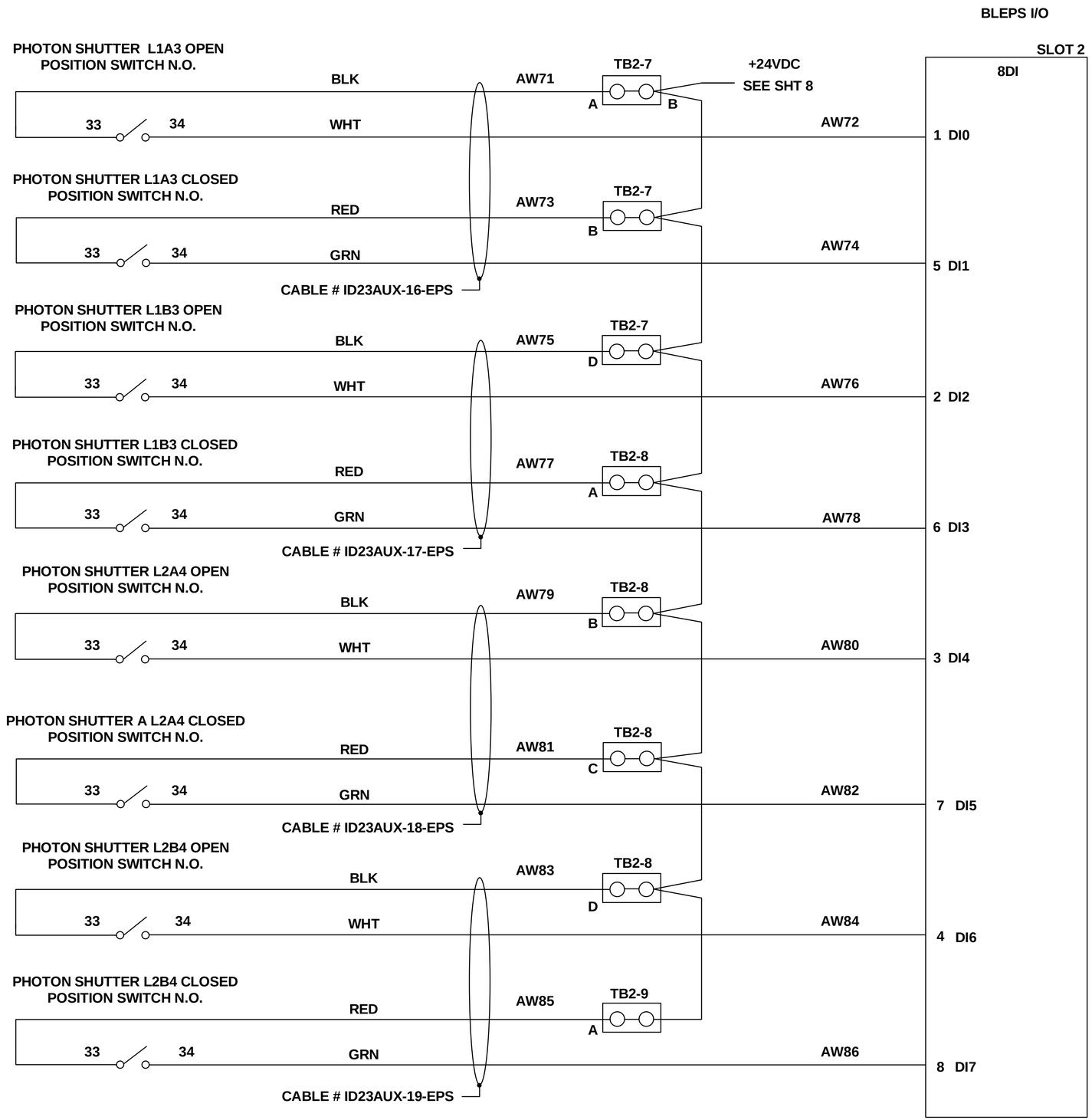

EPS A

LT-EL-BL-EI-PPS-1230-90

LT-EL-BL-EI (DRAWING DIRECTORY)	LT-EL-BL-EI-PPS-1230-90 (DRAWING NUMBER)	B (REV)
COMPUTER REPRODUCABLE	SCALE: N/A	SHEET 5 OF 17

REV	DESCRIPTION	DATE	BY	CHECKED	APP
	SEE SHEET 1				

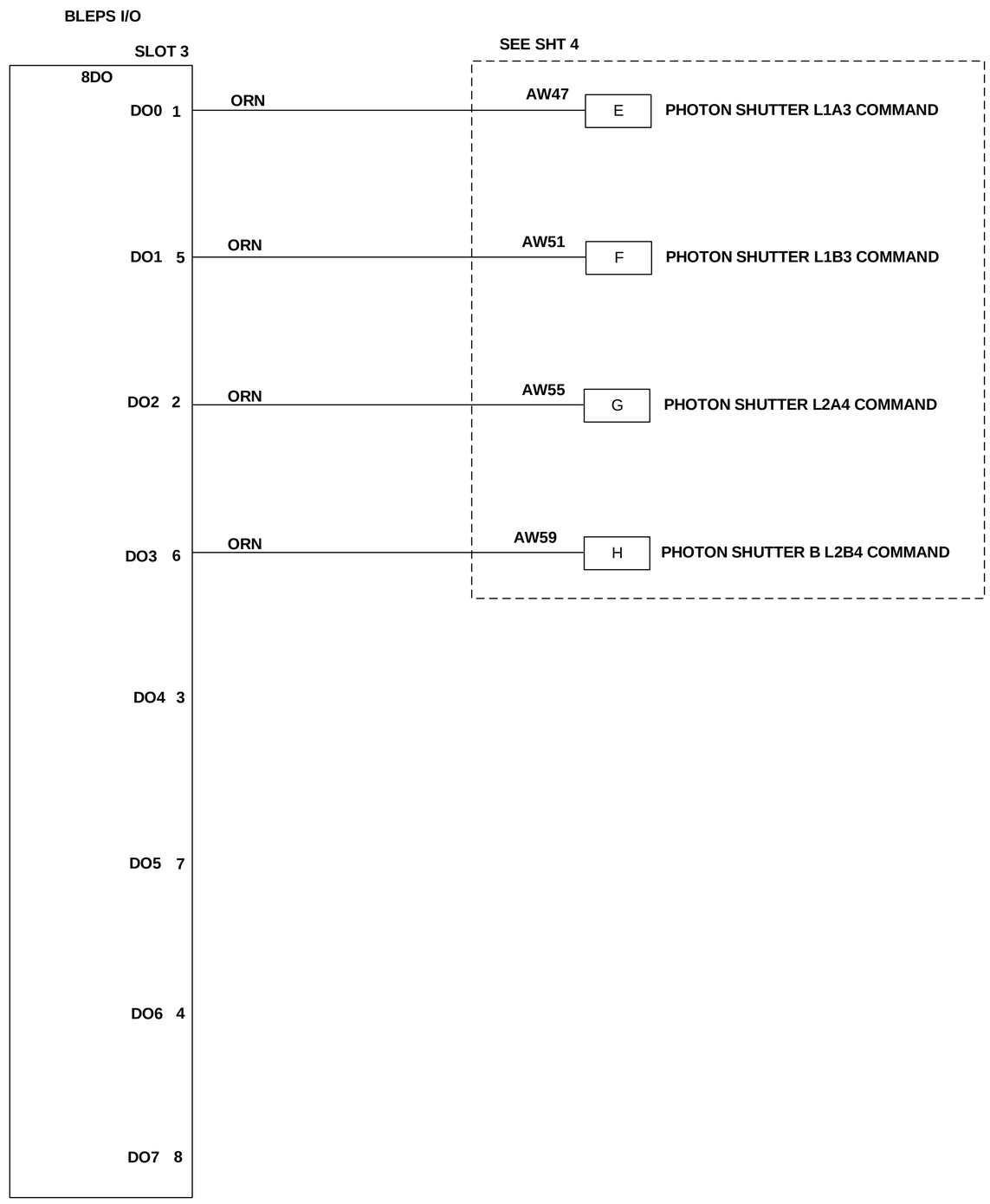

EPS
A

LT-EL-BL-EI	LT-EL-BL-EI-PPS-1230-90	B
DRAWING DIRECTORY	DRAWING NUMBER	REV

COMPUTER REPRODUCABLE | SCALE: N/A | SHEET 6 OF 17

LT-EL-BL-EI-PPS-1230-90

REV	DESCRIPTION	DATE	BY	CHECKED	APP
	SEE SHEET 1				

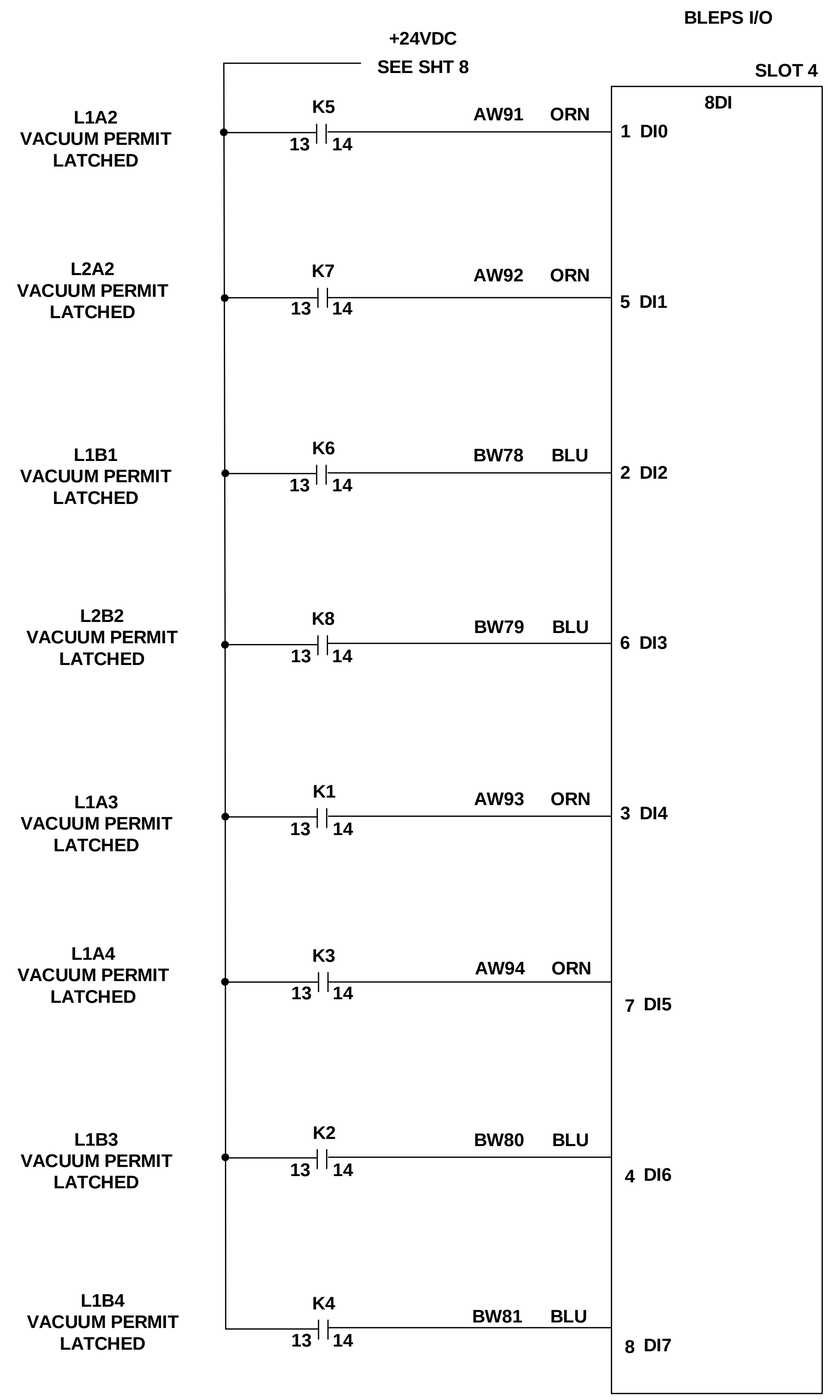

EPS
A

LT-EL-BL-EI-PPS-1230-90

LT-EL-BL-EI (DRAWING DIRECTORY)	LT-EL-BL-EI-PPS-1230-90 (DRAWING NUMBER)	B (REV)
COMPUTER REPRODUCABLE	SCALE: N/A	SHEET 7 OF 17

REV	DESCRIPTION	DATE	BY	CHECKED	APP
	SEE SHEET 1				

A CHAIN POWER

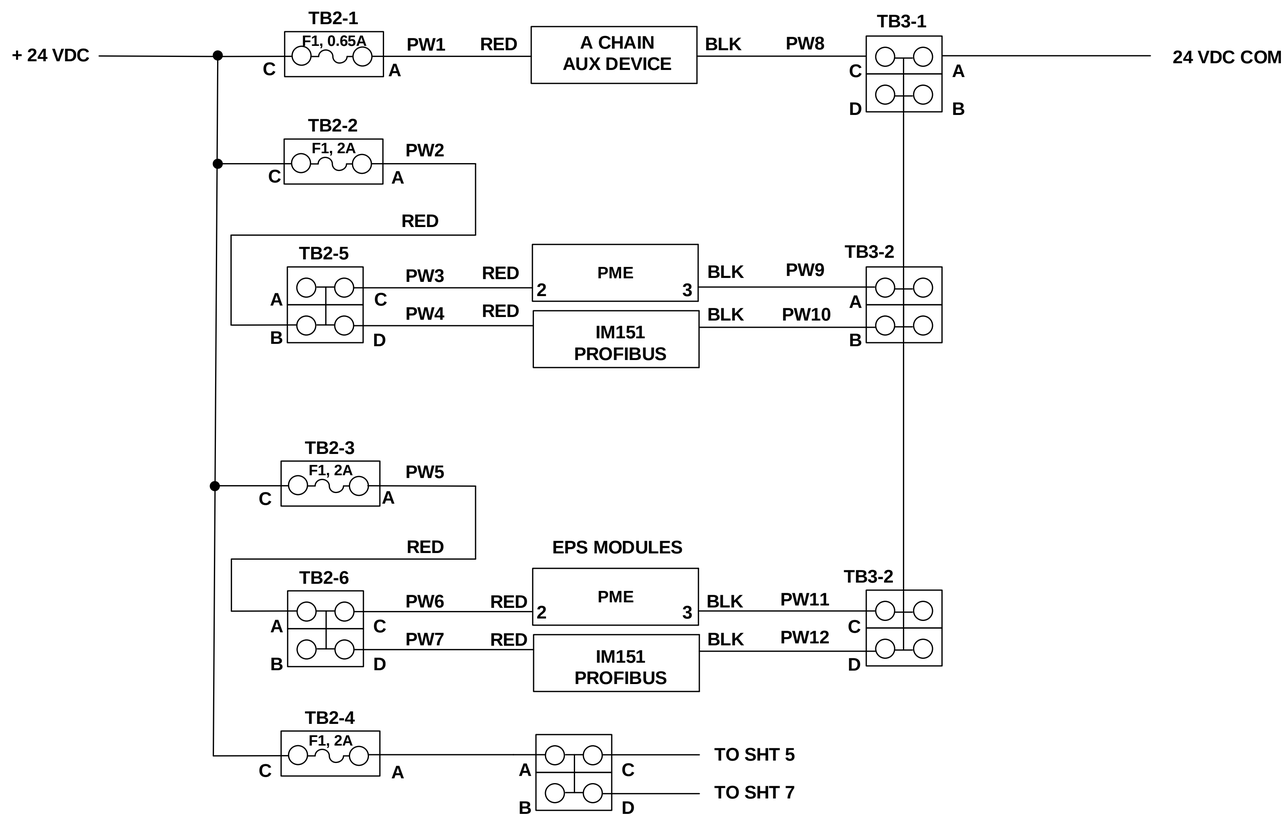

POWER DISTRIBUTION A

LT-EL-BL-EI DRAWING DIRECTORY	LT-EL-BL-EI-PPS-1230-90 DRAWING NUMBER	B REV
COMPUTER REPRODUCABLE	SCALE: N/A	SHEET 8 OF 17

LT-EL-BL-EI-PPS-1230-90

REV	DESCRIPTION	DATE	BY	CHECKED	APP
	SEE SHEET 1				

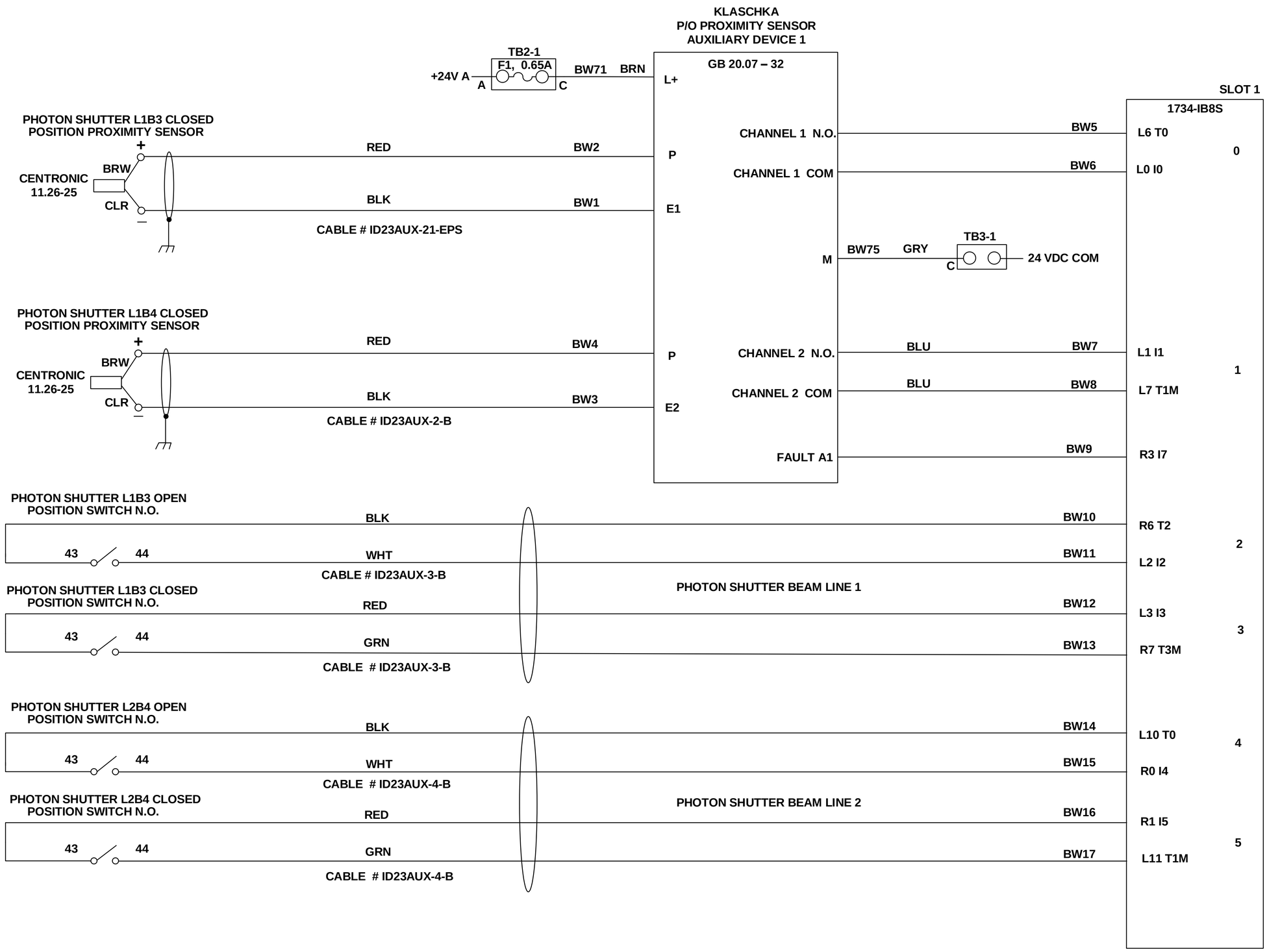

B

LT-EL-BL-EI (DRAWING DIRECTORY)	LT-EL-BL-EI-PPS-1230-90 (DRAWING NUMBER)	B (REV)
COMPUTER REPRODUCABLE	SCALE: N/A	SHEET 9 OF 17

LT-EL-BL-EI-PPS-1230-90

REV	DESCRIPTION	DATE	BY	CHECKED	APP
	SEE SHEET 1				

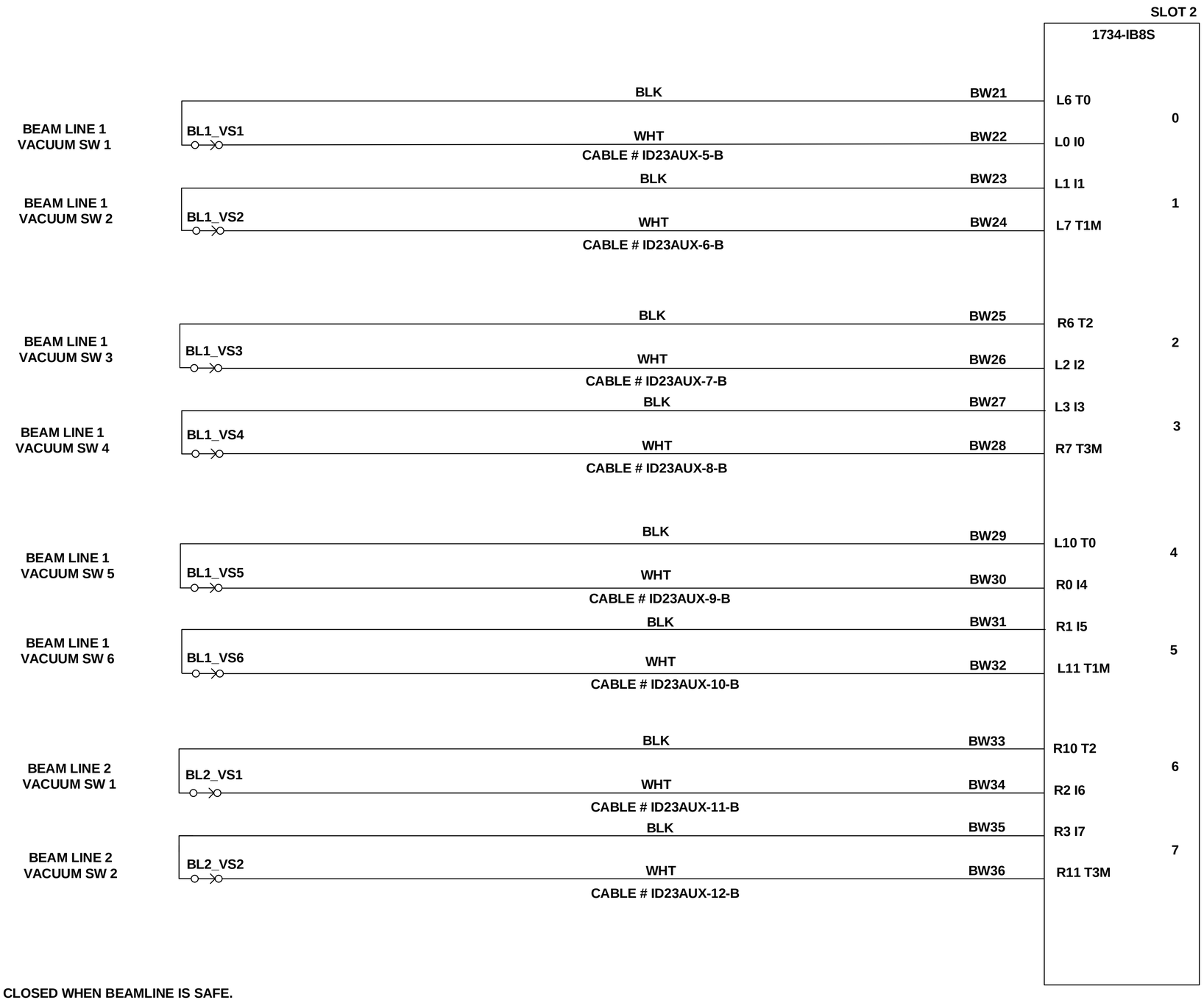

NOTES:

1. VACUUM SWITCHES ARE CLOSED WHEN BEAMLINE IS SAFE.

B

LT-EL-BL-EI (DRAWING DIRECTORY)	LT-EL-BL-EI-PPS-1230-90 (DRAWING NUMBER)	B (REV)
COMPUTER REPRODUCABLE	SCALE: N/A	SHEET 10 OF 17

LT-EL-BL-EI-PPS-1230-90

REV	DESCRIPTION	DATE	BY	CHECKED	APP
	SEE SHEET 1				

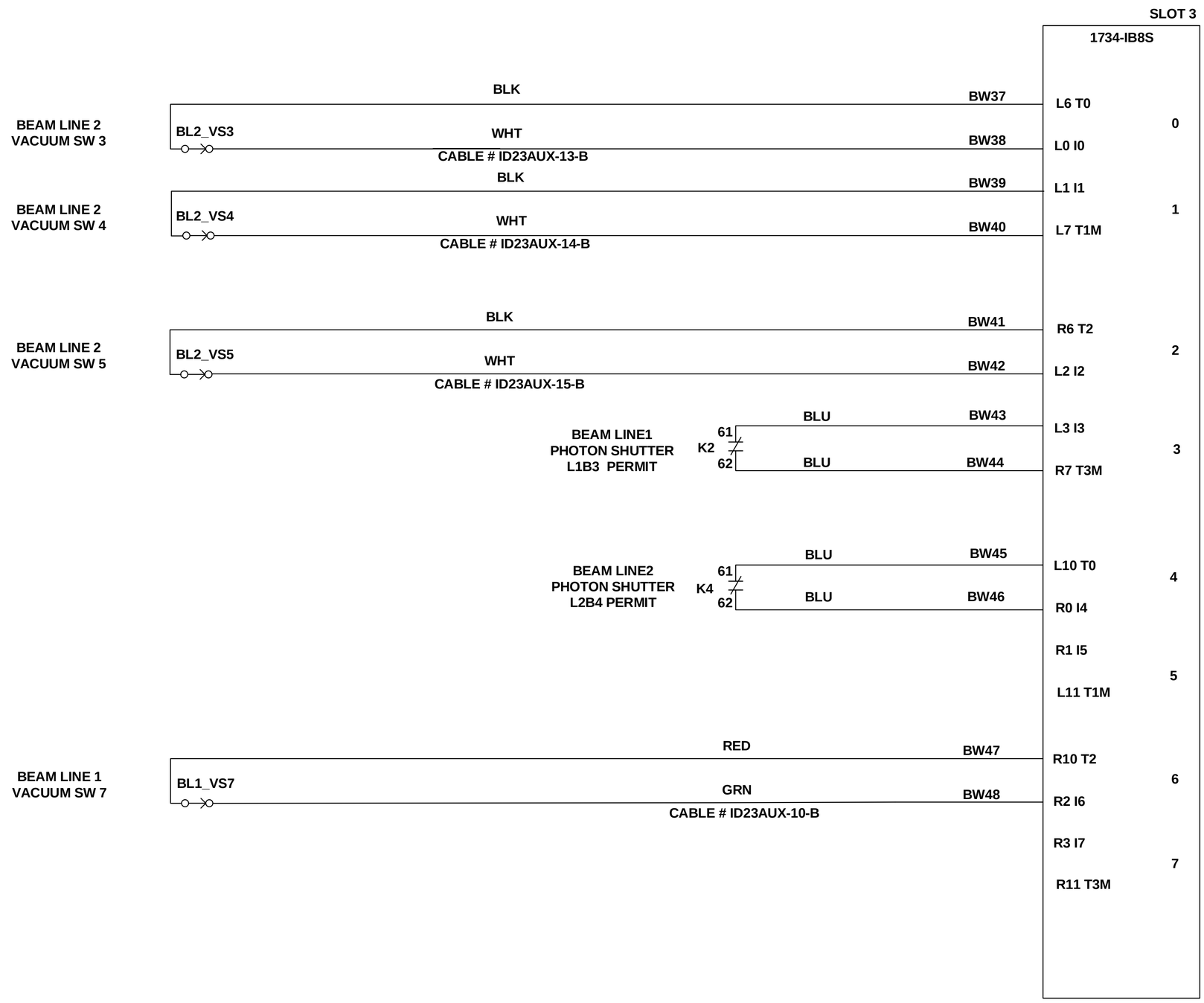

B

LT-EL-BL-EI	LT-EL-BL-EI-PPS-1230-90	B
DRAWING DIRECTORY	DRAWING NUMBER	REV

COMPUTER REPRODUCABLE | SCALE: N/A | SHEET 11 OF 17

LT-EL-BL-EI-PPS-1230-90

REV	DESCRIPTION	DATE	BY	CHECKED	APP
	SEE SHEET 1				

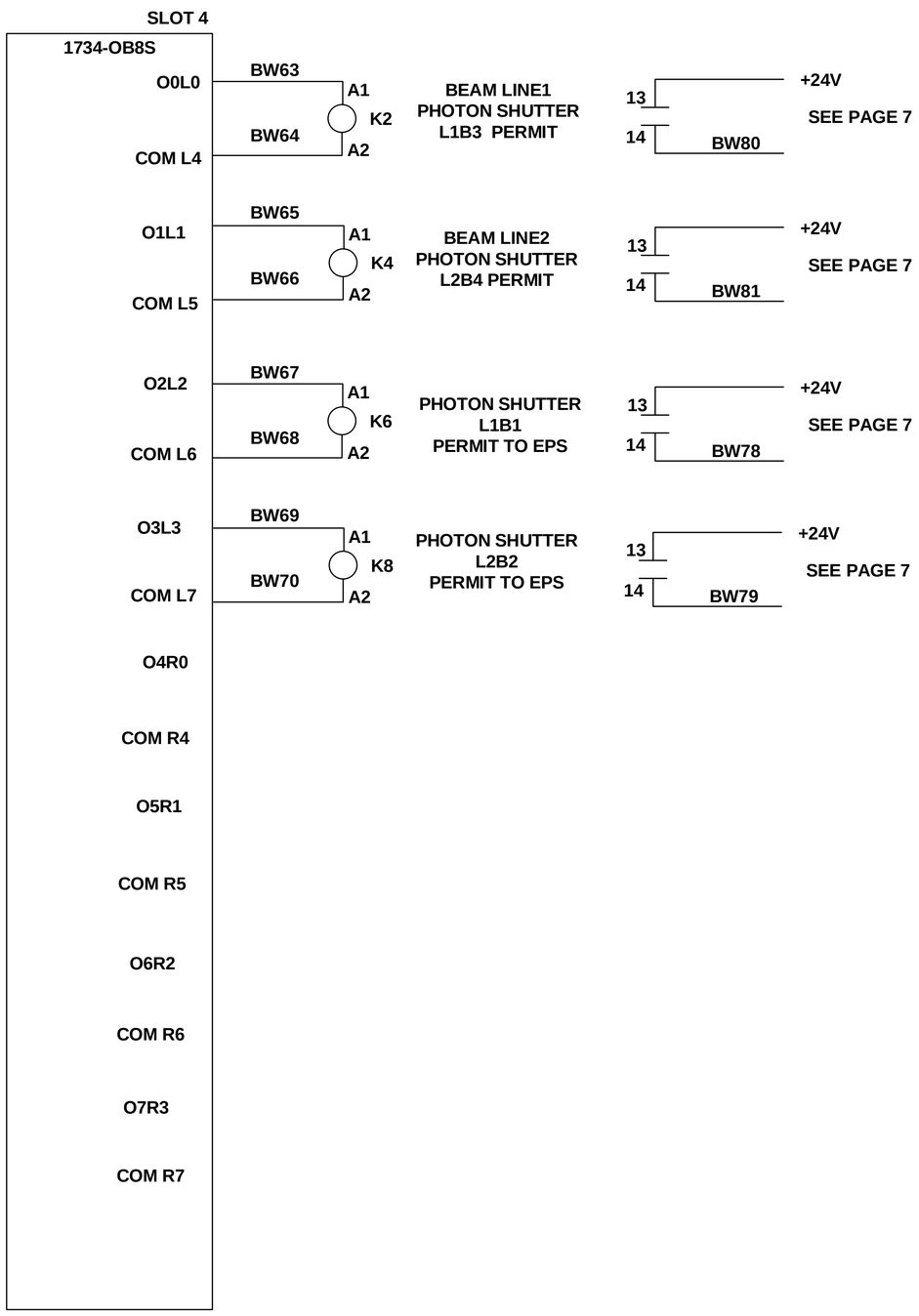

B

LT-EL-BL-EI (DRAWING DIRECTORY)	LT-EL-BL-EI-PPS-1230-90 (DRAWING NUMBER)	B (REV)
COMPUTER REPRODUCABLE	SCALE: N/A	SHEET 12 OF 17

LT-EL-BL-EI-PPS-1230-90

REV	DESCRIPTION	DATE	BY	CHECKED	APP
	SEE SHEET 1				

B CHAIN POWER

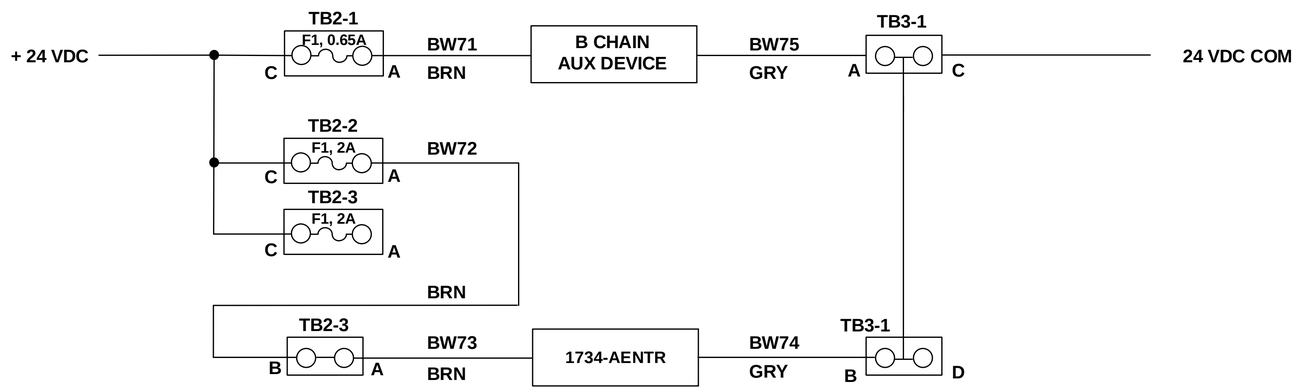

POWER DISTRIBUTION B

LT-EL-BL-EI (DRAWING DIRECTORY)	LT-EL-BL-EI-PPS-1230-90 (DRAWING NUMBER)	B (REV)
COMPUTER REPRODUCABLE	SCALE: N/A	SHEET 13 OF 17

LT-EL-BL-EI-PPS-1230-90

REV	DESCRIPTION	DATE	BY	CHECKED	APP
	SEE SHEET 1				

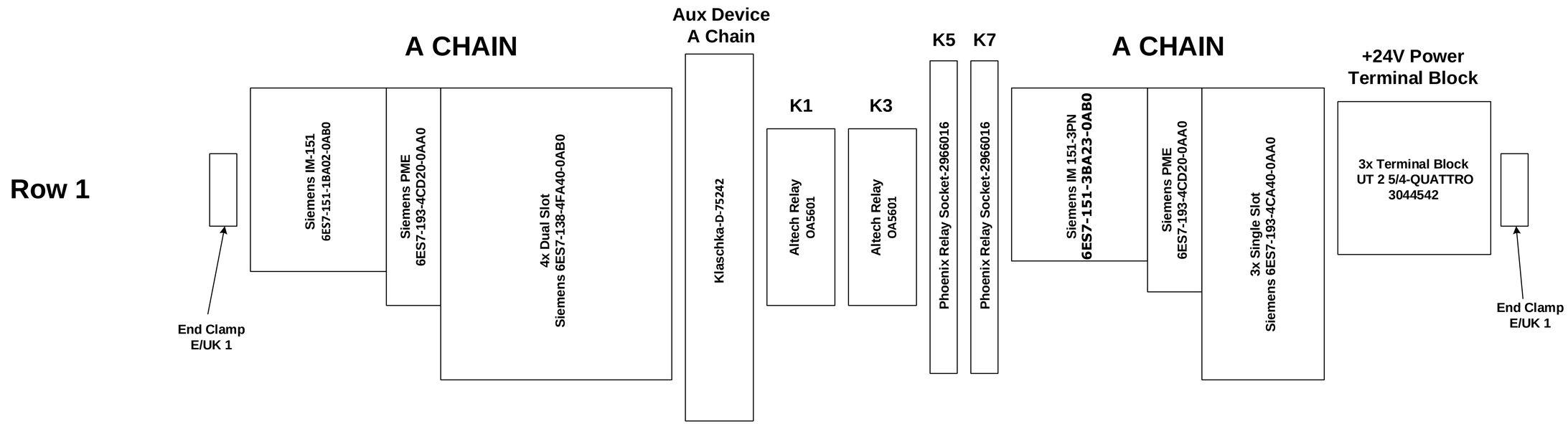

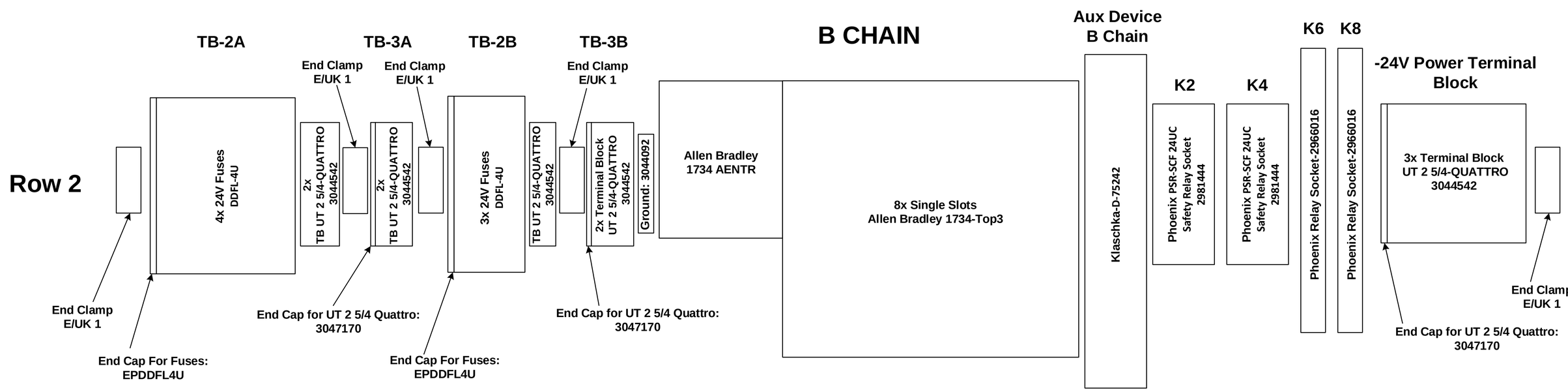

LT-EL-BL-EI (DRAWING DIRECTORY)	LT-EL-BL-EI-PPS-1230-90 (DRAWING NUMBER)	B (REV)
COMPUTER REPRODUCABLE	SCALE: N/A	SHEET 14 OF 17

LT-EL-BL-EI-PPS-1230-90

REV	DESCRIPTION	DATE	BY	CHECKED	APP
	SEE SHEET 1				

ROW 1:				
SLOT	MODULE	SOCKET	DESCRIPTION	VENDOR
	[5]			
	6ES7-151-1BA02-0AB0	N/A	IM 151	SIEMENS
1	6ES7-138-4CA50-0AB0	6ES7-193-4CD20-0AA0	POWER MODULE PM-E	SIEMENS
2	6ES7-138-4FA04-0AB0	6ES7-193-4CF40-0AA0	4/8 FDI 8 SAFE IN	SIEMENS
3	6ES7-138-4FA04-0AB0	6ES7-193-4CF40-0AA0	4/8 FDI 8 SAFE IN	SIEMENS
4	6ES7-138-4FA04-0AB0	6ES7-193-4CF40-0AA0	4/8 FDI 8 SAFE IN	SIEMENS
5	6ES7-138-4FB03-0AB0	6ES7-193-4CF40-0AA0	4/8 FDO	SIEMENS
	D-75242	N/A	AUX DEVICE A CHAIN	KLASCHKA
K1	OA5601		ALTECH RELAY	BNL
K3	OA5601		ALTECH RELAY	BNL
K5	2961105	2966016	PLC RELAY	PHOENIX
K7	2961105	2966016	PLC RELAY	PHOENIX
6	6ES7-151-3BA23-0AB0	NA	PN INTERFACE MODULE IM 151-3 PN	SIEMENS
7	6ES7-151-4CA50-0AB0	6ES7-193-4CD20-0AA0	PME	SIEMENS
8	6ES7-131-4BF00-0AB0	6ES7-193-4CA40-0AA0	8 DI	SIEMENS
9	6ES7-132-4BF00-0AA0	6ES7-193-4CA40-0AA0	8 DO	SIEMENS
10	6ES7-131-4BF00-0AB0	6ES7-193-4CA40-0AA0	8 DI	SIEMENS
+24V PWR TB	[11]	1>3 [7]	[5]	
ROW 2:				
TB 2A	[5]	[6]	1>4 [8]	5>6 [7]
TB 3A	[5]	[11]	1>2 [7]	
TB 2B	[5]	[6]	1>3 [8]	4 [7]
TB 3B	[5]	[11]	1>2 [7]	[2]
SLOT	MODULE	SOCKET	DESCRIPTION	VENDOR
	1734 AENTR	N/A	2 PORT ETHERNET ADAPTER	AB
1	1734-IB8S	1734-TOP3	8 INPUT SAFETY	AB
2	1734-IB8S	1734-TOP3	8 INPUT SAFETY	AB
3	1734-IB8S	1734-TOP3	8 INPUT SAFETY	AB
4	1734-OB8E	1734-TOP 3	8 OUTPUT SAFETY	AB
	D-75242	N/A	AUX DEVICE B CHAIN	KLASCHKA
K2	2981444	N/A	PSR-SCF 24UC SAFETY RELAY	PHOENIX
K4	2981444	N/A	PSR-SCF 24UC SAFETY RELAY	PHOENIX
K6	2961105	2966016	PLC RELAY	PHOENIX
K8	2961105	2966016	PLC RELAY	PHOENIX
-24V PWR TB	[11]	1>3 [7]	[5]	

REV	DESCRIPTION	DATE	BY	CHECKED	APP
	SEE SHEET 1				

COLOR	PROD #	TYPE
[1]	3044636	Double-level terminal block - UTTB 2,5
[2]	3044092	GROUND
[3]	3047293	End cover - D-UTTB 2,5/4
[4]	3047303	Spacer plate - DP-UTTB 2,5/4
[5]	1201413	End clamp - E/UK 1
[6]	EPDDFL4U	End Plate; Term Blk; DIN Rail; Gray;
[7]	3044542	DIN Rail Terminal Blocks UT 2 5/4-QUATTRO
[8]	DDFL-4U	24V FUSES
[9]	3044076	Feed-through terminal block - UT 2,5
[10]	3047028	End cover - D-UT 2,5/10
[11]	3047170	End cover - D-UT 2,5/4-QUATTRO
[12]	3044102	Feed-through terminal block - UT 4
[13]	2775016	Feed-through terminal block - UDK 4
[14]	KN-TL-14	KONNECT IT 3 CIRCUIT TERMINAL BLOCK
[15]	KN-EC-TL	3 CIRCUIT TERMINAL BLOCK COVER
[16]	CDL4U(E)DD2	99321 ALTECH DIODE TERMINAL BLOCK
[17]	EPCDL4U	ALTECH DIODE TB END COVER
[18]	3044636	Diode TB - UTTB 2,5 O-UL/UR-UL

[1]
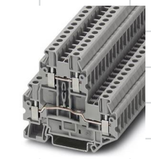

[7]

[13]

[2]

[8]

[14]

[3]

[9]

[15]

[4]

[10]

[16]
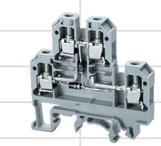

[5]

[11]

[17]
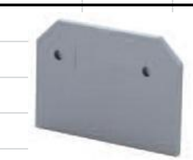

[6]
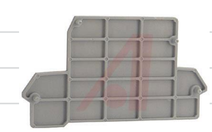

[12]
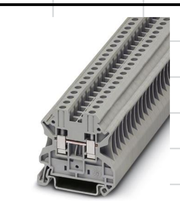

[18]
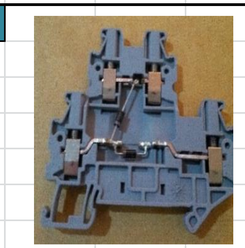

Paired part numbers are
color coordinated.

LT-EL-BL-EI (DRAWING DIRECTORY)	LT-EL-BL-EI-PPS-1230-90 (DRAWING NUMBER)	B (REV)
COMPUTER REPRODUCABLE	SCALE: N/A	SHEET 16 OF 17

LT-EL-BL-EI-PPS-1230-90

REV	DESCRIPTION	DATE	BY	CHECKED	APP
	SEE SHEET 1				

23-ID Auxiliary box Cable list

CABLE Num.	CHAIN	From LOCATION	To LOCATION	CONDUCTORS
ID23AUX-1-A	A	Aux. Box	Photon Shutter L1A3 Closed Position Proximity Sensor	2
ID23AUX-1-B	B	Aux. Box	Photon Shutter L1B3 SOLENOID	2
ID23AUX-2-A	A	Aux. Box	Photon Shutter L2A4 Closed Position Proximity Sensor	2
ID23AUX-2-B	B	Aux. Box	Photon Shutter L2B4 Closed Position Proximity Sensor	2
ID23AUX-3-A	A	Aux. Box	Photon Shutter L1A3 Closed&Open Position Switch	4
ID23AUX-3-B	B	Aux. Box	Photon Shutter L1B3 Closed&Open Position Switch	4
ID23AUX-4-A	A	Aux. Box	Photon Shutter L2A4 Closed&Open Position Switch	4
ID23AUX-4-B	B	Aux. Box	Photon Shutter L2B4 Closed&Open Position Switch	4
ID23AUX-5-A	A	Aux. Box	A Chain Beam Line1 Vacuum Switch 1	2
ID23AUX-5-B	B	Aux. Box	B Chain Beam Line1 Vacuum Switch 1	2
ID23AUX-6-A	A	Aux. Box	A Chain Beam Line1 Vacuum Switch 2	2
ID23AUX-6-B	B	Aux. Box	B Chain Beam Line1 Vacuum Switch 2	2
ID23AUX-7-A	A	Aux. Box	A Chain Beam Line1 Vacuum Switch3	2
ID23AUX-7-B	B	Aux. Box	B Chain Beam Line1 Vacuum Switch3	2
ID23AUX-8-A	A	Aux. Box	A Chain Beam Line1 Vacuum Switch4	2
ID23AUX-8-B	B	Aux. Box	B Chain Beam Line1 Vacuum Switch4	2
ID23AUX-9-A	A	Aux. Box	A Chain Beam Line1 Vacuum Switch5	2
ID23AUX-9-B	B	Aux. Box	B Chain Beam Line1 Vacuum Switch5	2
ID23AUX-10-A	A	Aux. Box	A Chain Beam Line1 Vacuum Switch6	2
ID23AUX-10-B	B	Aux. Box	B Chain Beam Line1 Vacuum Switch6	2
ID23AUX-11-A	A	Aux. Box	A Chain Beam Line2 Vacuum Switch 1	2
ID23AUX-11-B	B	Aux. Box	B Chain Beam Line2 Vacuum Switch 1	2
ID23AUX-12-A	A	Aux. Box	A Chain Beam Line2 Vacuum Switch 2	2
ID23AUX-12-B	B	Aux. Box	B Chain Beam Line2 Vacuum Switch 2	2
ID23AUX-13-A	A	Aux. Box	A Chain Beam Line2 Vacuum Switch3	2
ID23AUX-13-B	B	Aux. Box	B Chain Beam Line2 Vacuum Switch3	2
ID23AUX-14-A	A	Aux. Box	A Chain Beam Line2 Vacuum Switch4	2
ID23AUX-14-B	B	Aux. Box	B Chain Beam Line2 Vacuum Switch4	2
ID23AUX-15-A	A	Aux. Box	A Chain Beam Line2 Vacuum Switch5	2
ID23AUX-15-B	B	Aux. Box	B Chain Beam Line2 Vacuum Switch5	2
ID23AUX-16-EPS	EPS	Aux. Box	Photon Shutter L1A3 Closed&Open Position Switch	4
ID23AUX-17-EPS	EPS	Aux. Box	Photon Shutter L1B3 Closed&Open Position Switch	4
ID23AUX-18-EPS	EPS	Aux. Box	Photon Shutter L2A4 Closed&Open Position Switch	4
ID23AUX-19-EPS	EPS	Aux. Box	Photon Shutter L2B4 Closed&Open Position Switch	4
ID23AUX-20-EPS	EPS	Aux. Box	Photon Shutter L1A3 SOLENOID	2
ID23AUX-21-EPS	EPS	Aux. Box	Photon Shutter L1B3 Closed Position Proximity Sensor	2
ID23AUX-22-EPS	EPS	Aux. Box	Photon Shutter L2A4 SOLENOID	2
ID23AUX-23-EPS	EPS	Aux. Box	Photon Shutter L2B4 SOLENOID	2
Spares				

REV	DESCRIPTION	DATE	BY	CHECKED	APP
A	INITIAL RELEASE	9/04/2014	SEJ	JM	SB
B	REVISED PER ECN 015-1278	9-18-15	CG	JM	SB

WATER FLOW INTERLOCK CHANNEL 1 A CHAIN

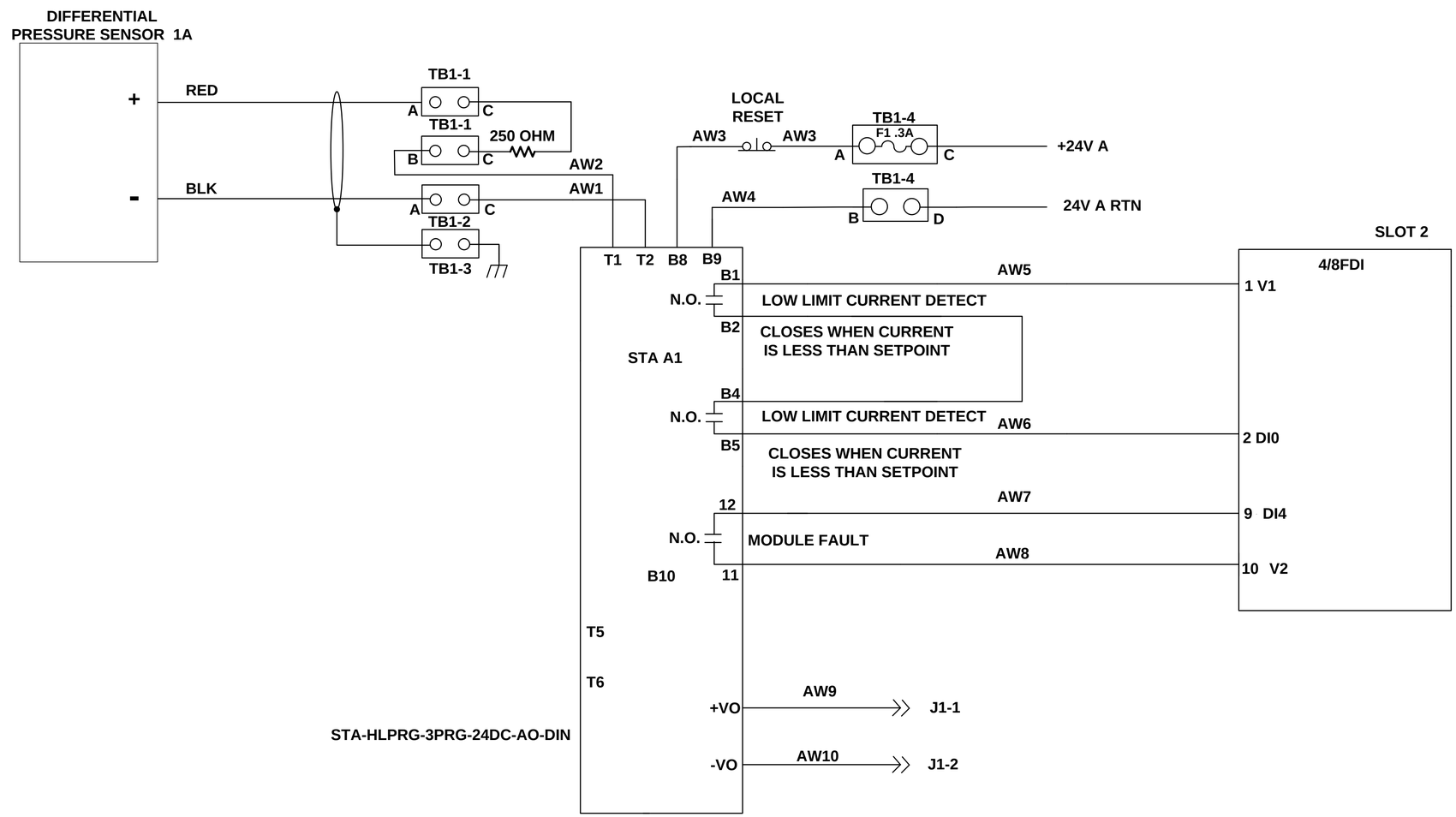

A

LT-EL-BL-EI-PPS-1230-92

BROOKHAVEN NATIONAL LABORATORY
BROOKHAVEN SCIENCE ASSOCIATES
UPTON, NEW YORK 11973
Exploring Life's Mysteries, Protecting its Future

NSLSII NATIONAL SYNCHROTRON LIGHT SOURCE II

UNLESS OTHERWISE SPECIFIED
INTEGER TOLERANCES ± .06
DECIMAL TOLERANCES
.X ± .030
.XX ± .015
.XXX ± .010
ANGULAR TOLERANCE ± 0.5°
UNSPECIFIED RADII .02 MAX
125 BREAK SHARP CORNERS AND EDGES
FINISH MAX .03 MIN .005

UNLESS OTHERWISE SPECIFIED DIMENSIONS ARE IN INCHES DIMENSIONS IN [**] ARE MILLIMETERS EQUIV. FOR REF. ONLY
INTERPRET DRAWING AS PER ANSI Y14.5 OR Y32.2

ESH&Q RISK LEVEL A-1

		DATE	OUTSTANDING ECN'S
DRWN BY	S. JARZABKOWSKI	9/04/2014	
CHK BY	J. MALLEY	9/04/2014	
ENG APP	S. BUDA	9/04/2014	
SUPV APP	G. GANETIS	9/06/2014	
QA APP	E. CHESWICK	9/05/2014	
ESH APP	B. LEE	9/05/2014	

WIRING DIAGRAM,
ID23 – H20 (CSX-H2O)
A CHAIN AND B CHAIN

LT-EL-BL-EI — DRAWING DIRECTORY
LT-EL-BL-EI-PPS-1230-92 — DRAWING NUMBER
B — REV

COMPUTER REPRODUCIBLE
SCALE: N/A
SHEET 1 OF 14

JOB NUMBER
USED ON DWG. NO.

REV	DESCRIPTION	DATE	BY	CHECKED	APP
	SEE SHEET 1				

WATER FLOW INTERLOCK CHANNEL 2 A CHAIN

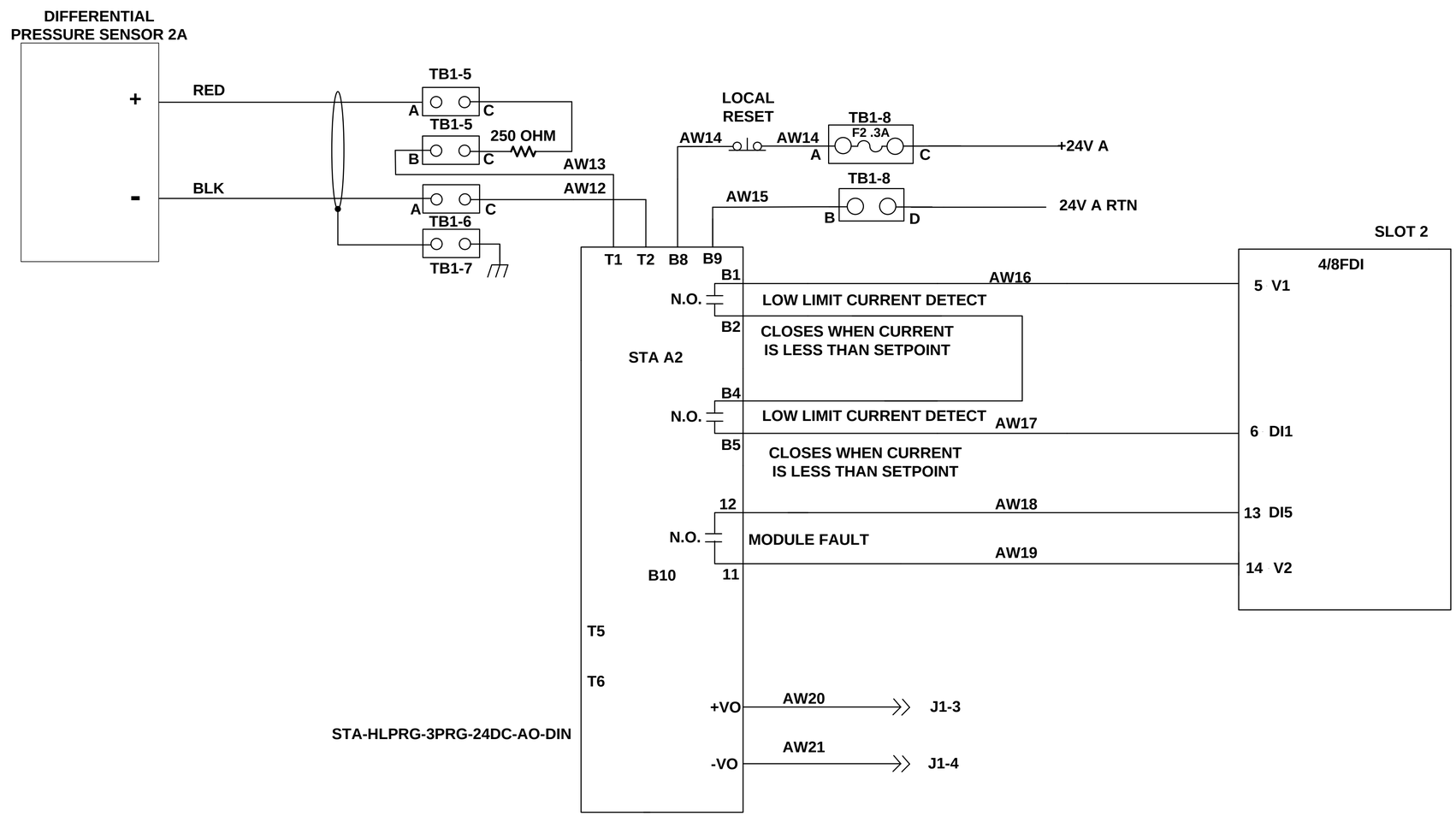

A

LT-EL-BL-EI	LT-EL-BL-EI-PPS-1230-92	B
DRAWING DIRECTORY	DRAWING NUMBER	REV

COMPUTER REPRODUCIBLE | SCALE: N/A | SHEET 2 OF 14

LT-EL-BL-EI-PPS-1230-92

REV	DESCRIPTION	DATE	BY	CHECKED	APP
	SEE SHEET 1				

WATER FLOW INTERLOCK CHANNEL 3 A CHAIN

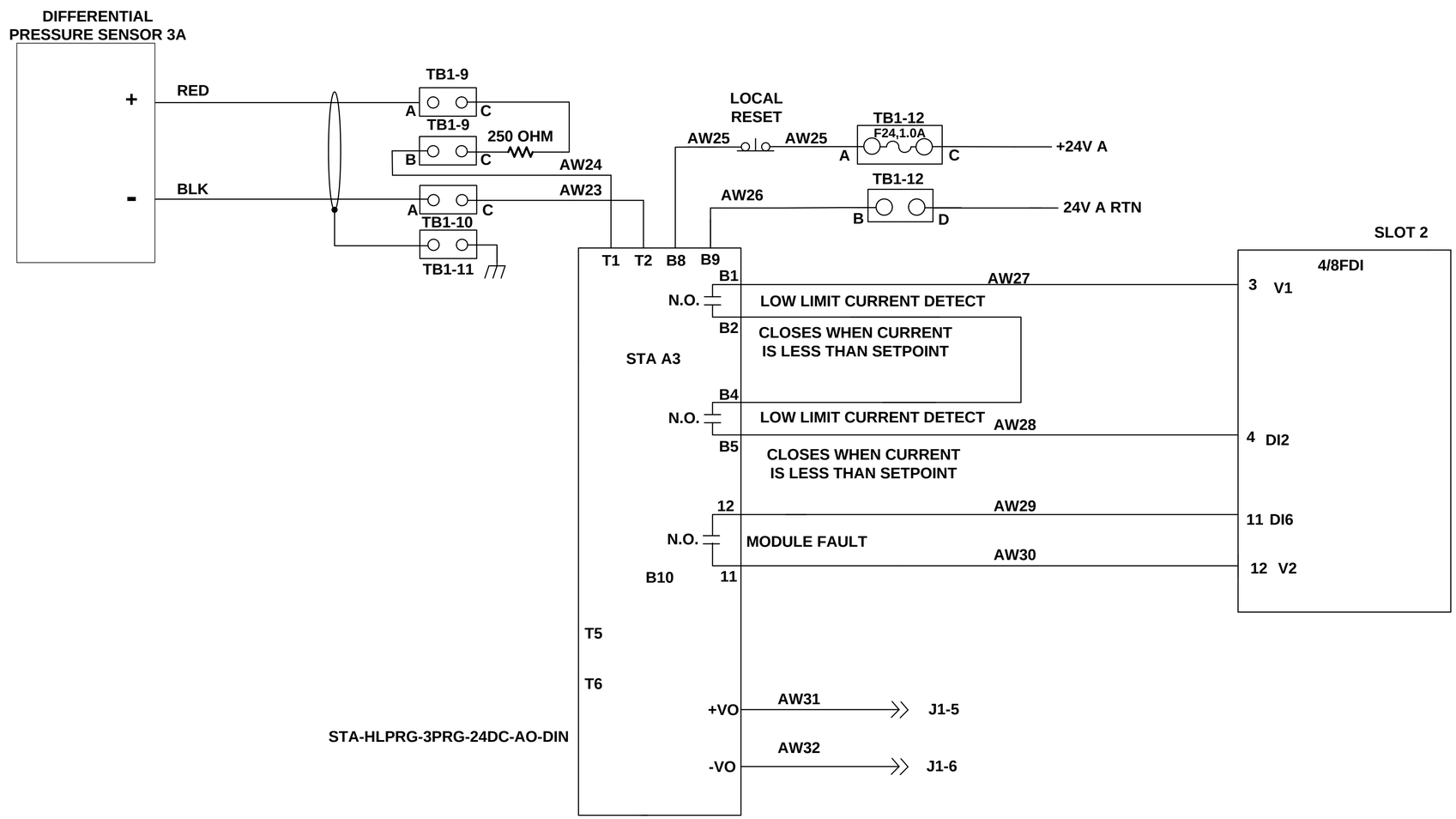

A

LT-EL-BL-EI	LT-EL-BL-EI-PPS-1230-92	B
DRAWING DIRECTORY	DRAWING NUMBER	REV

COMPUTER REPRODUCIBLE | SCALE: N/A | SHEET 3 OF 14

LT-EL-BL-EI-PPS-1230-92

REV	DESCRIPTION	DATE	BY	CHECKED	APP
	SEE SHEET 1				

WATER FLOW INTERLOCK CHANNEL 4 A CHAIN

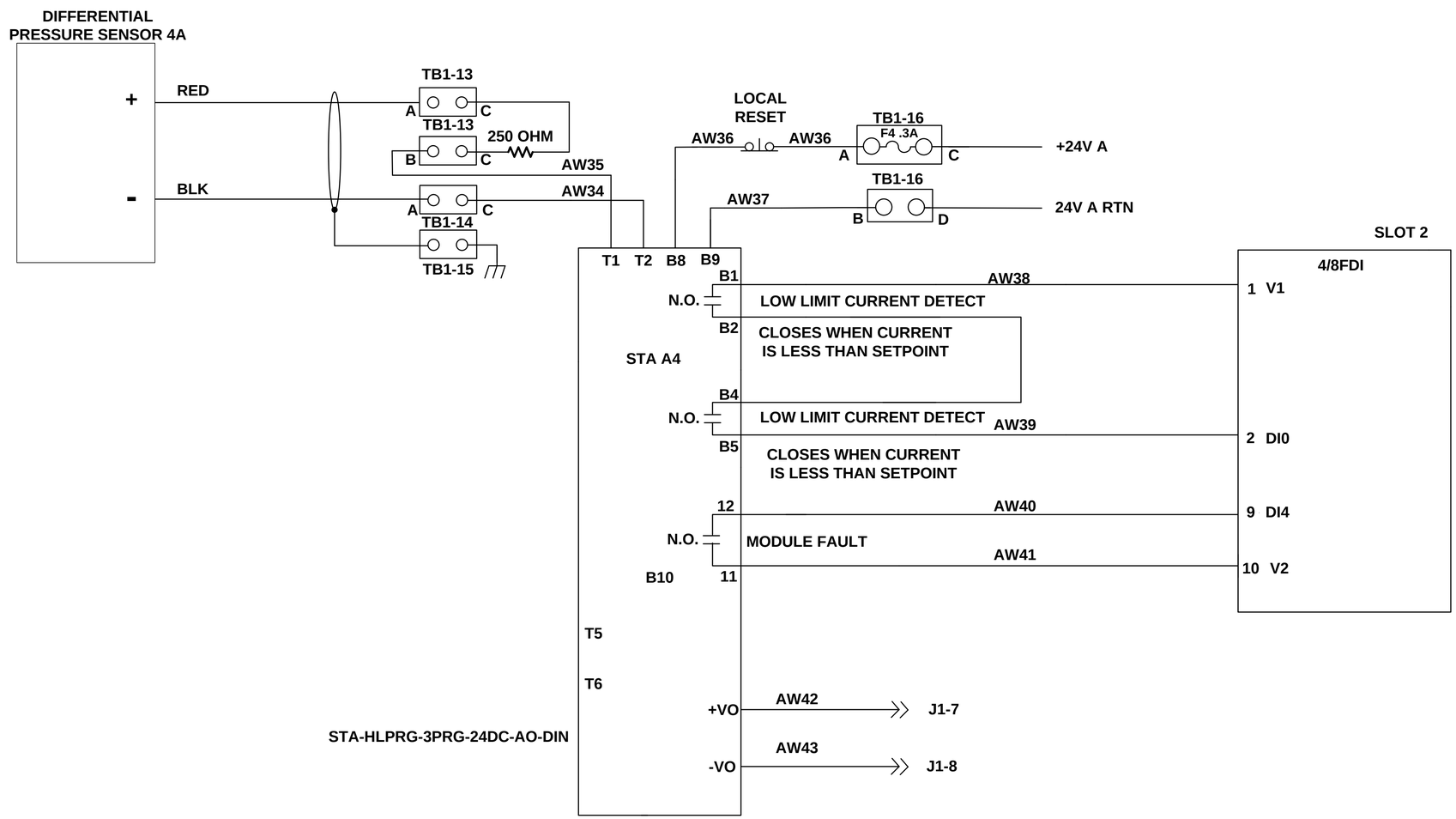

A

LT-EL-BL-EI	LT-EL-BL-EI-PPS-1230-92	B
DRAWING DIRECTORY	DRAWING NUMBER	REV

COMPUTER REPRODUCIBLE | SCALE: N/A | SHEET 4 OF 14

LT-EL-BL-EI-PPS-1230-92

REV	DESCRIPTION	DATE	BY	CHECKED	APP
	SEE SHEET 1				

WATER FLOW INTERLOCK CHANNEL 5 A CHAIN

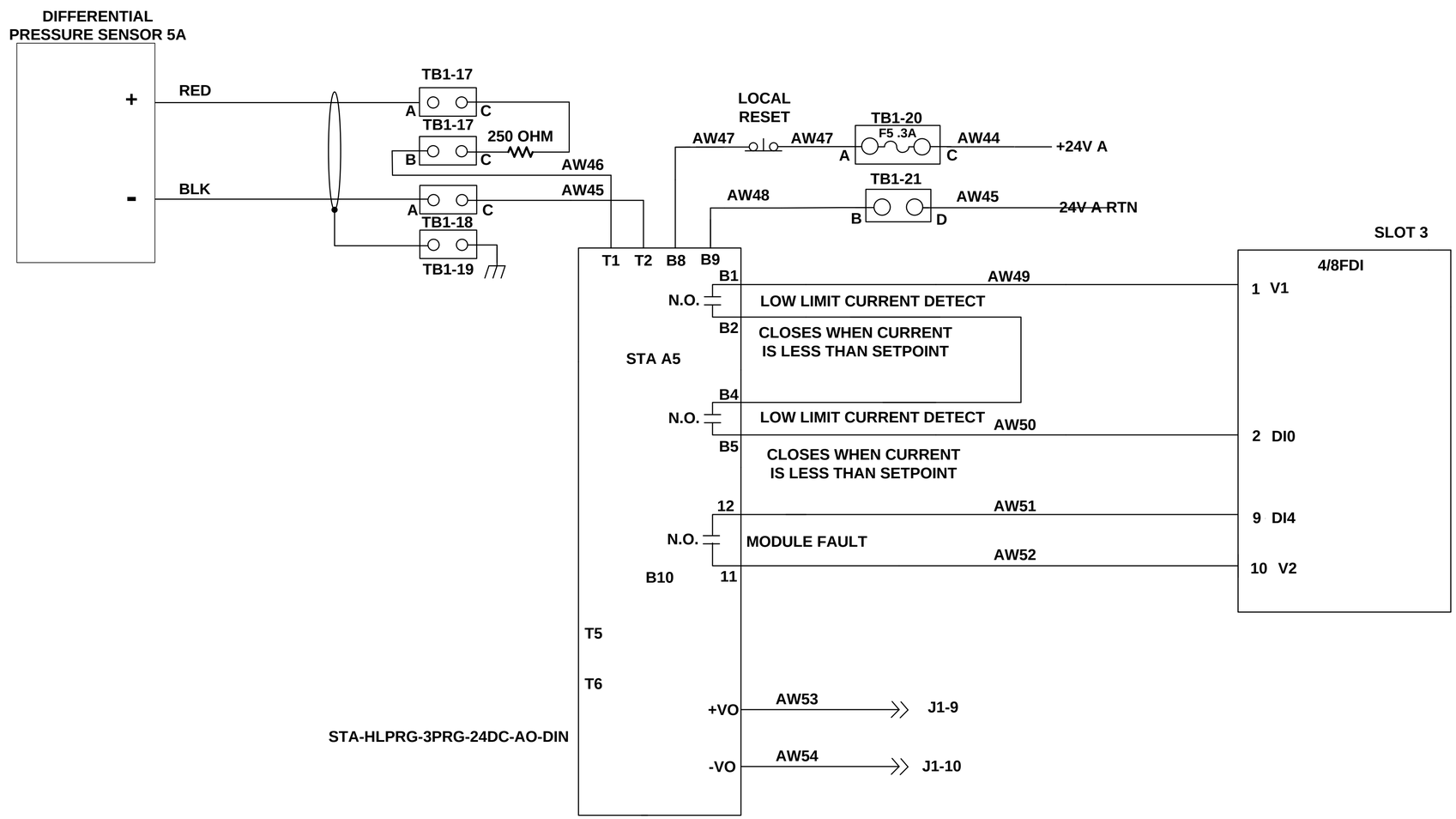

A

LT-EL-BL-EI	LT-EL-BL-EI-PPS-1230-92	B
DRAWING DIRECTORY	DRAWING NUMBER	REV

COMPUTER REPRODUCIBLE | SCALE: N/A | SHEET 5 OF 14

LT-EL-BL-EI-PPS-1230-92

REV	DESCRIPTION	DATE	BY	CHECKED	APP
	SEE SHEET 1				

WATER FLOW INTERLOCK CHANNEL 1 B CHAIN

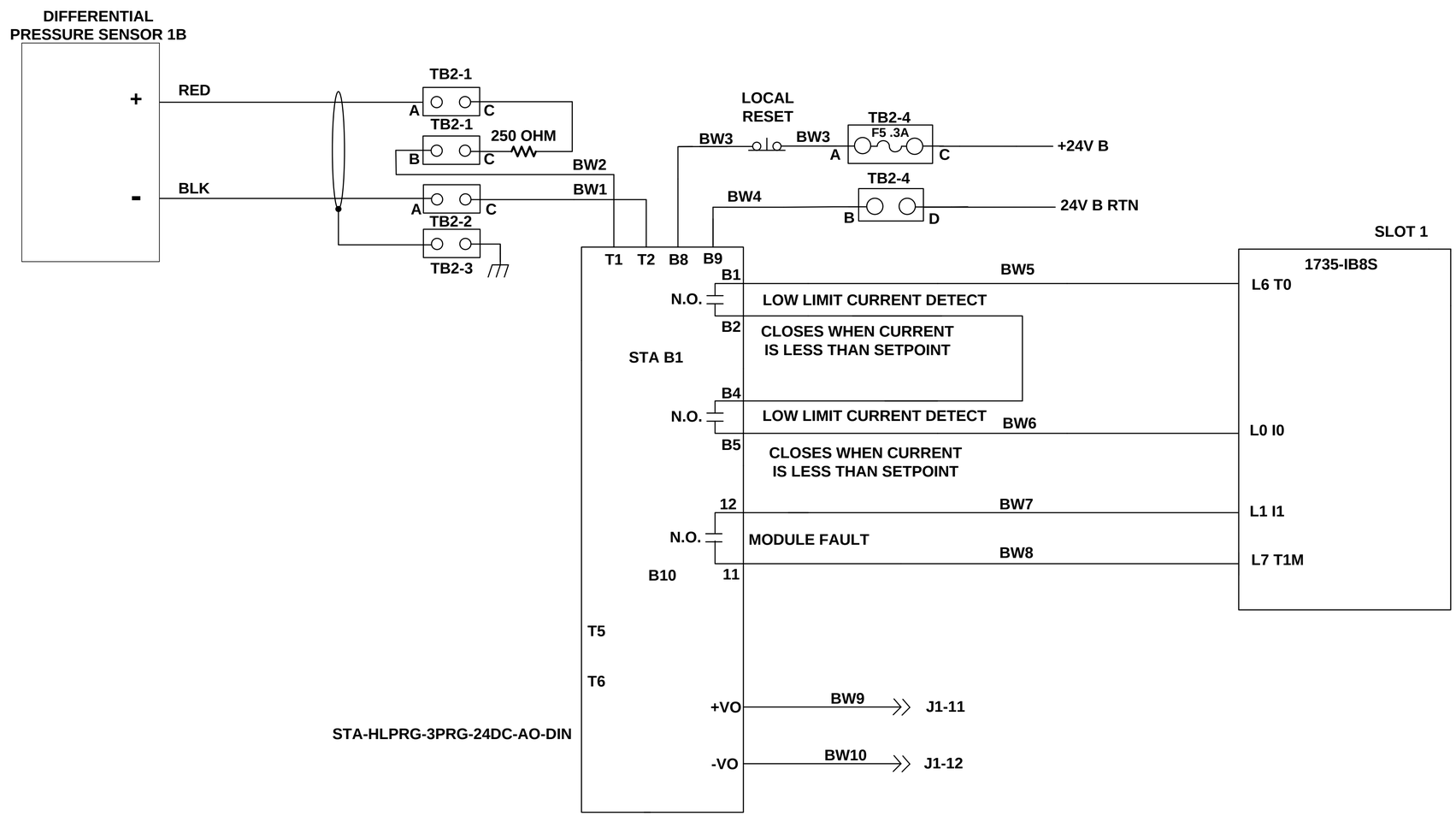

B

LT-EL-BL-EI	LT-EL-BL-EI-PPS-1230-92	B
DRAWING DIRECTORY	DRAWING NUMBER	REV

COMPUTER REPRODUCIBLE | SCALE: N/A | SHEET 6 OF 14

LT-EL-BL-EI-PPS-1230-92

REV	DESCRIPTION	DATE	BY	CHECKED	APP
	SEE SHEET 1				

WATER FLOW INTERLOCK CHANNEL 2 B CHAIN

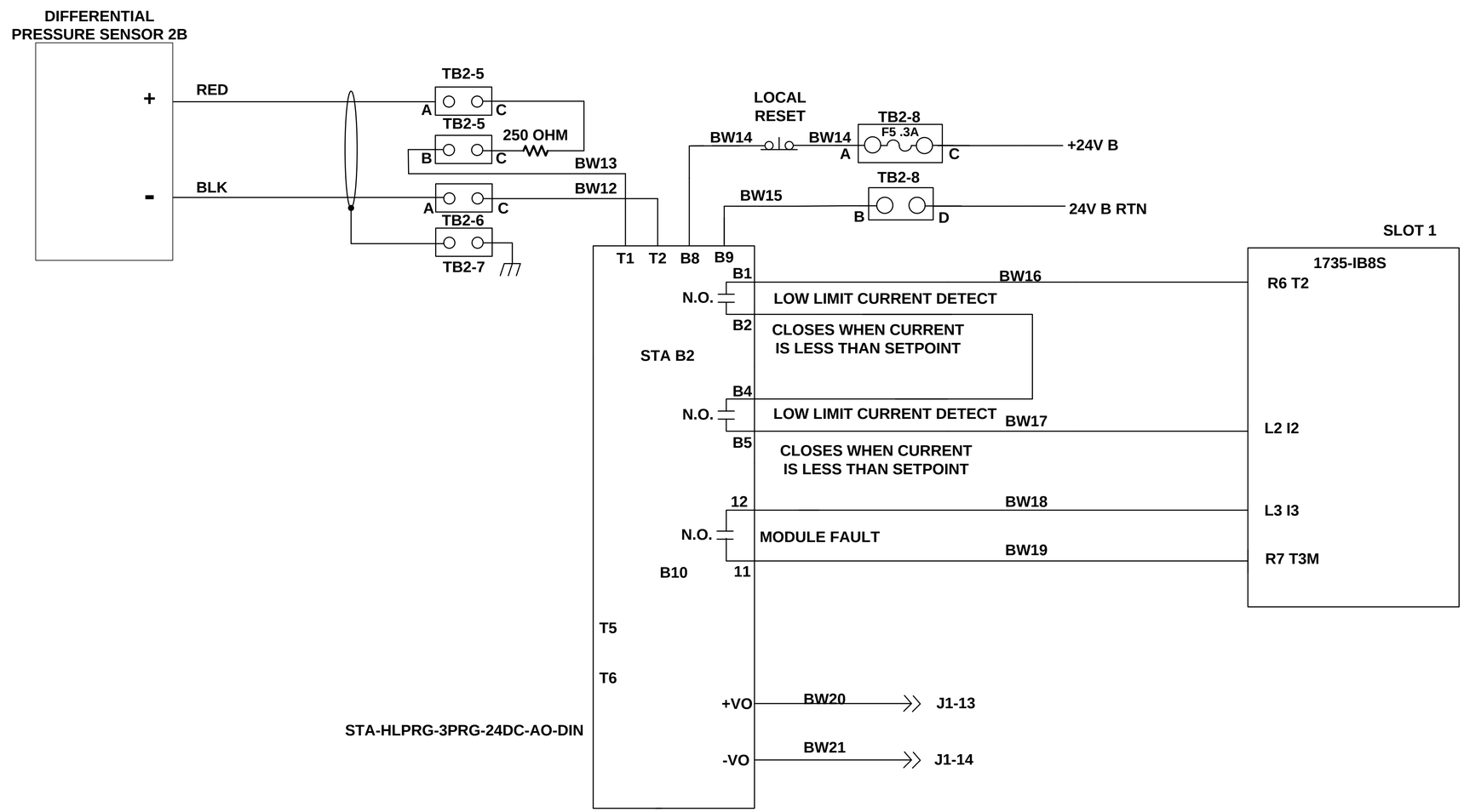

B

LT-EL-BL-EI	LT-EL-BL-EI-PPS-1230-92	B
DRAWING DIRECTORY	DRAWING NUMBER	REV

COMPUTER REPRODUCIBLE | SCALE: N/A | SHEET 7 OF 14

LT-EL-BL-EI-PPS-1230-92

REV	DESCRIPTION	DATE	BY	CHECKED	APP
	SEE SHEET 1				

WATER FLOW INTERLOCK CHANNEL 3 B CHAIN

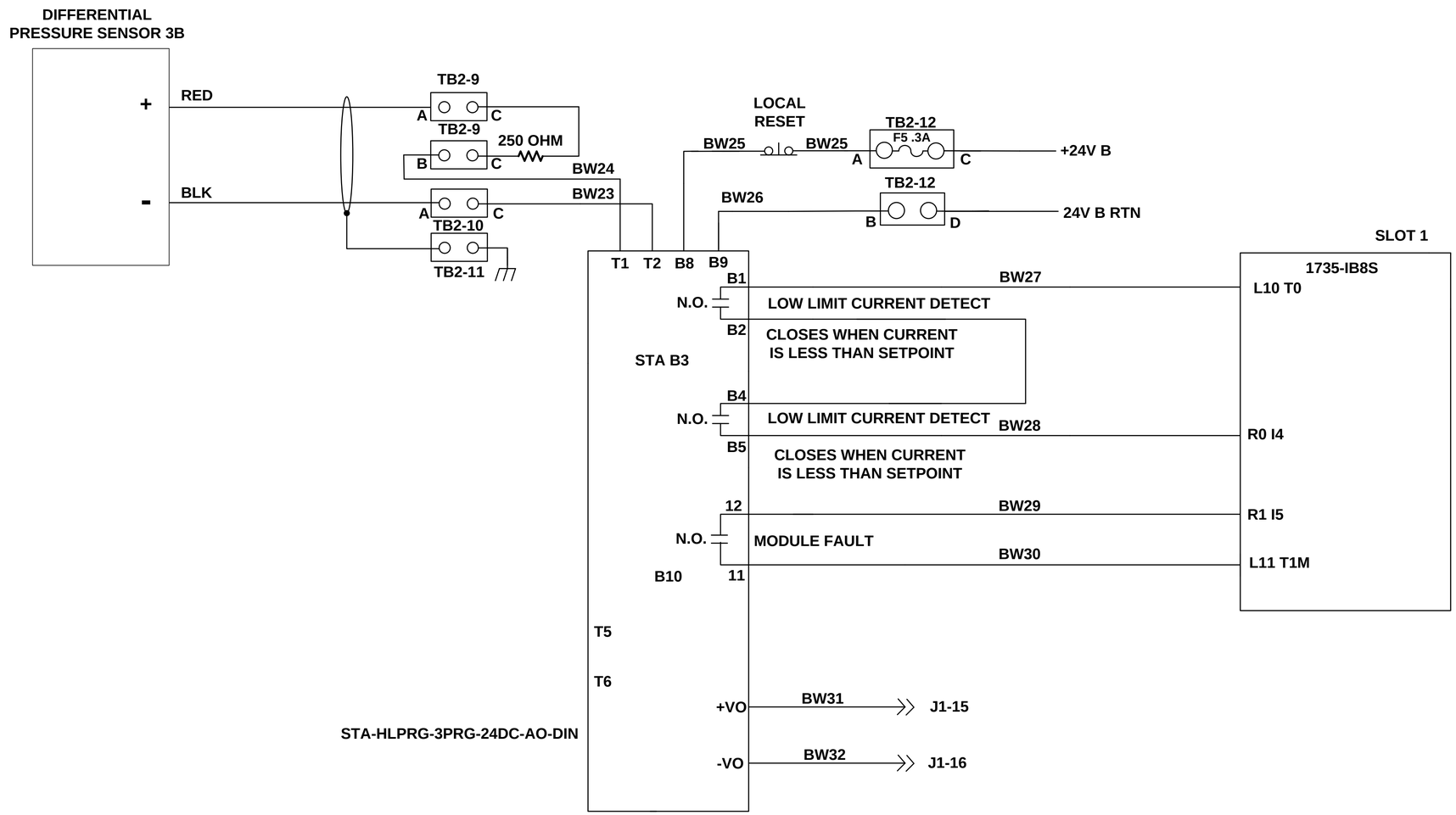

B

LT-EL-BL-EI	LT-EL-BL-EI-PPS-1230-92	B
DRAWING DIRECTORY	DRAWING NUMBER	REV

COMPUTER REPRODUCIBLE | SCALE: N/A | SHEET 8 OF 14

LT-EL-BL-EI-PPS-1230-92

REV	DESCRIPTION	DATE	BY	CHECKED	APP
	SEE SHEET 1				

WATER FLOW INTERLOCK CHANNEL 4 B CHAIN

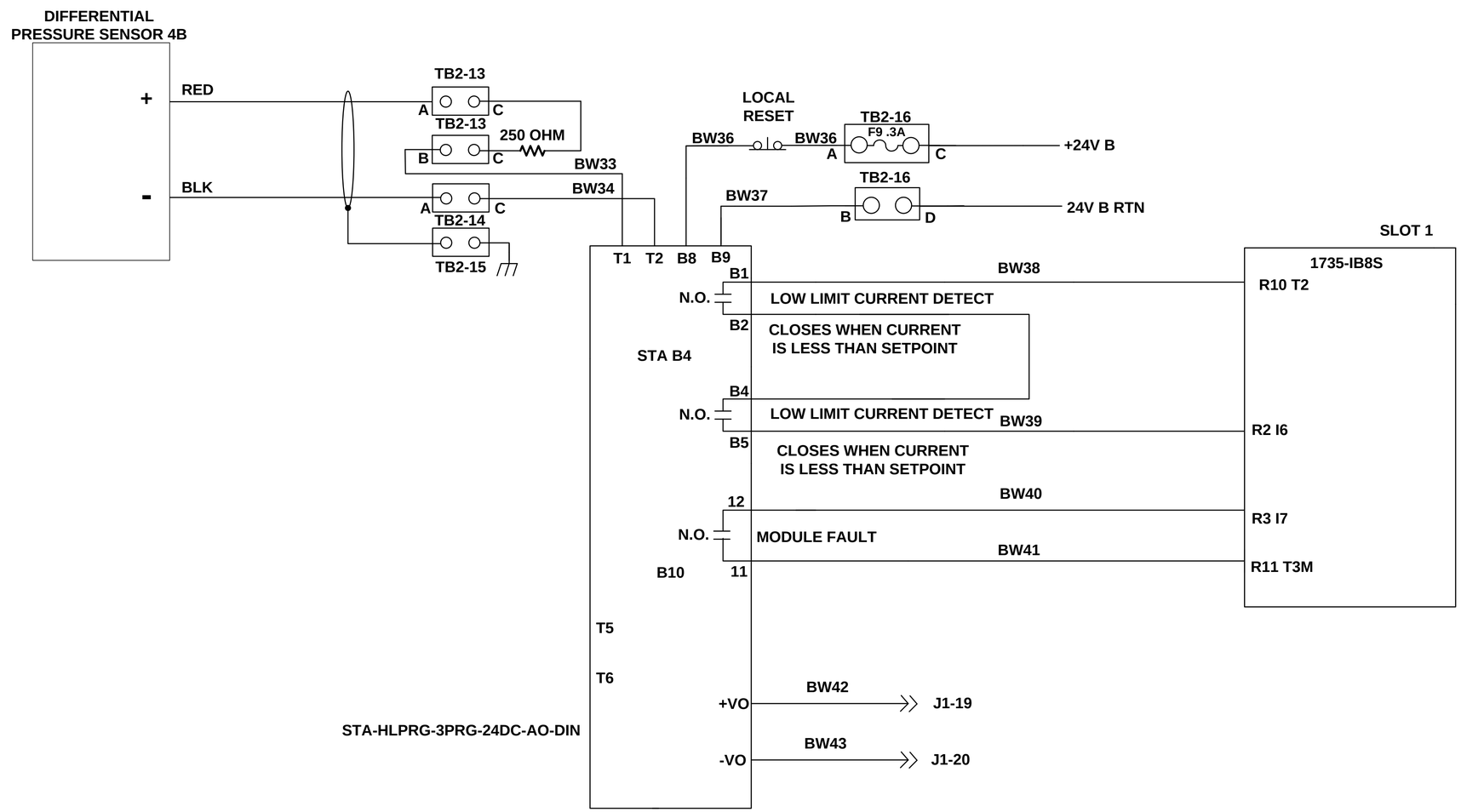

B

LT-EL-BL-EI	LT-EL-BL-EI-PPS-1230-92	B
DRAWING DIRECTORY	DRAWING NUMBER	REV

COMPUTER REPRODUCIBLE | SCALE: N/A | SHEET 9 OF 14

LT-EL-BL-EI-PPS-1230-92

REV	DESCRIPTION	DATE	BY	CHECKED	APP
	SEE SHEET 1				

WATER FLOW INTERLOCK CHANNEL 5 B CHAIN

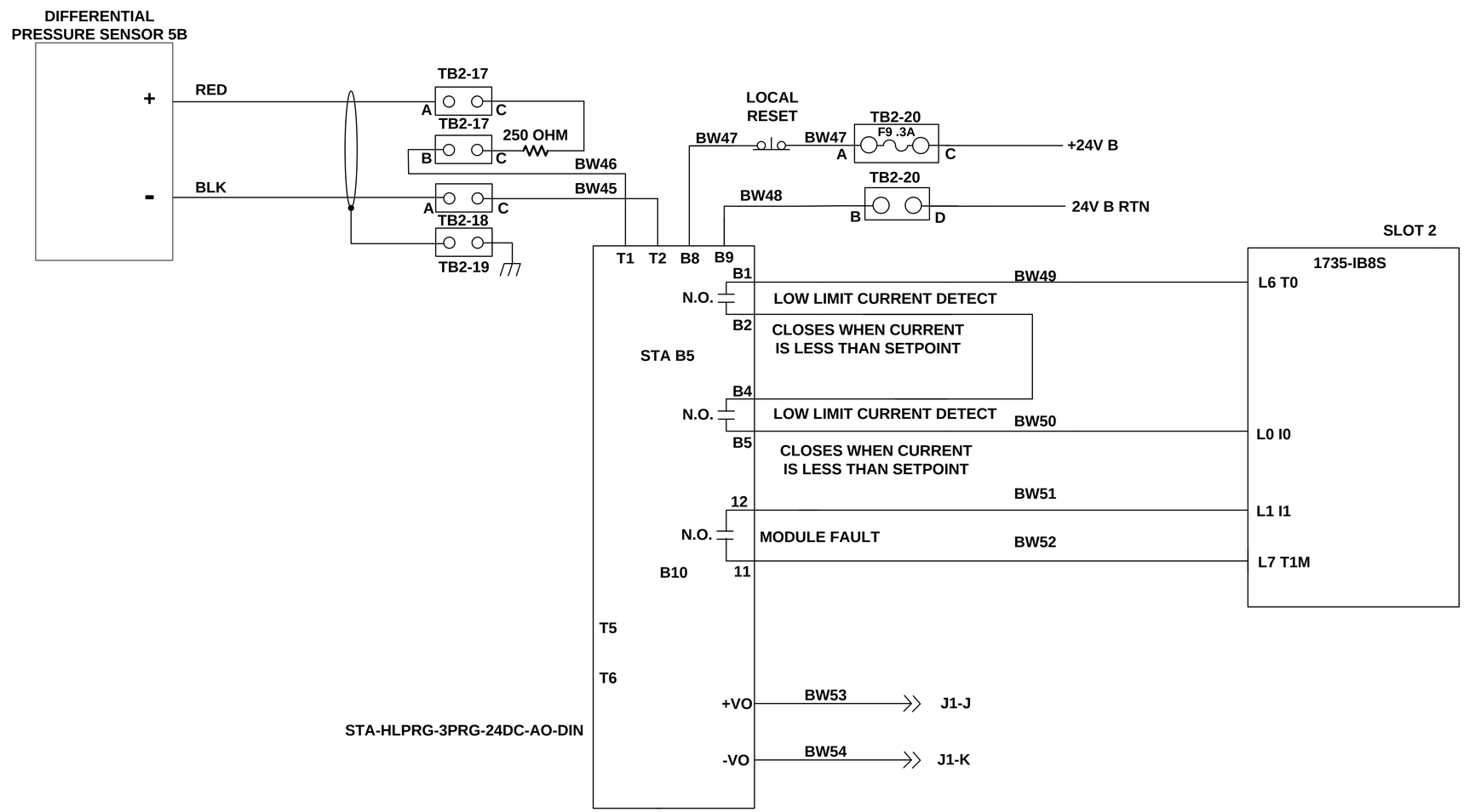

B

LT-EL-BL-EI	LT-EL-BL-EI-PPS-1230-92	B
DRAWING DIRECTORY	DRAWING NUMBER	REV

COMPUTER REPRODUCIBLE | SCALE: N/A | SHEET 10 OF 14

LT-EL-BL-EI-PPS-1230-92

REV	DESCRIPTION	DATE	BY	CHECKED	APP
	SEE SHEET 1				

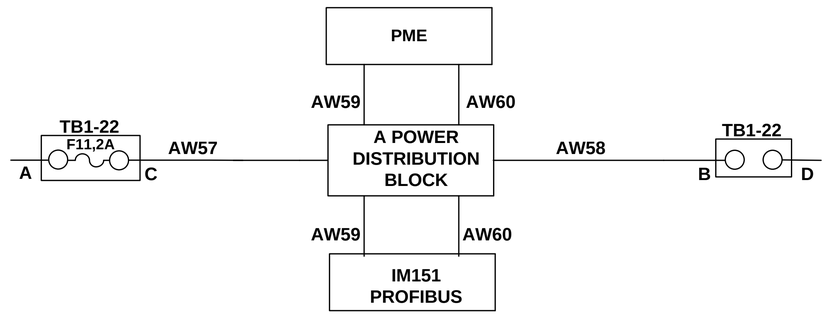

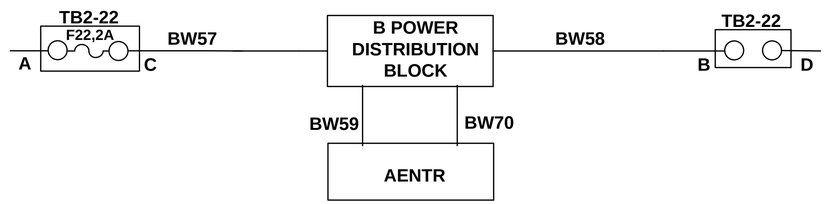

LT-EL-BL-EI-PPS-1230-92

LT-EL-BL-EI	LT-EL-BL-EI-PPS-1230-92	B
DRAWING DIRECTORY	DRAWING NUMBER	REV

COMPUTER REPRODUCIBLE | SCALE: N/A | SHEET 11 OF 14

REV	DESCRIPTION	DATE	BY	CHECKED	APP
	SEE SHEET 1				

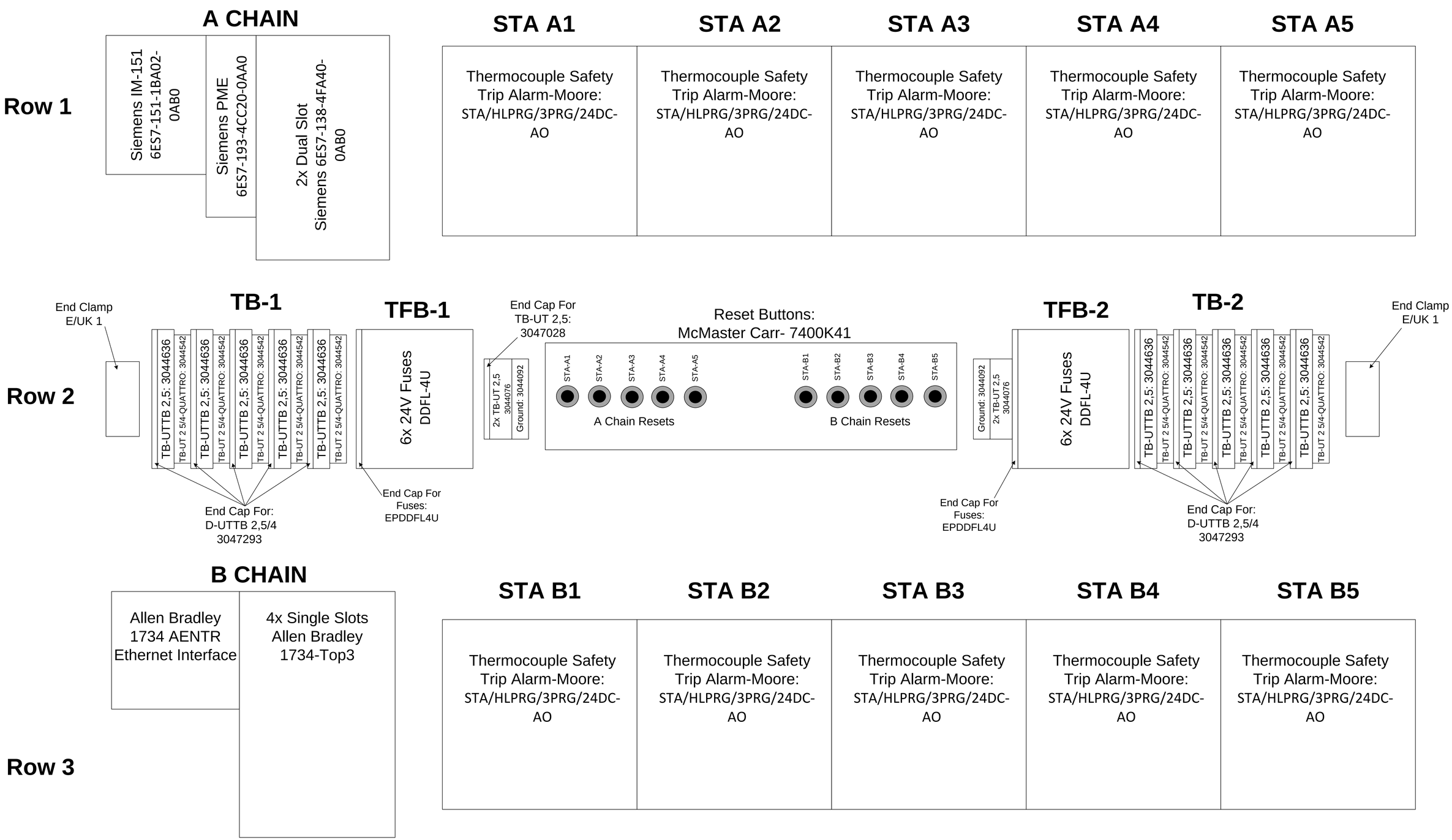

LT-EL-BL-EI	LT-EL-BL-EI-PPS-1230-92	B
DRAWING DIRECTORY	DRAWING NUMBER	REV
COMPUTER REPRODUCIBLE	SCALE: N/A	SHEET 12 OF 14

LT-EL-BL-EI-PPS-1230-92

REV	DESCRIPTION	DATE	BY	CHECKED	APP
	SEE SHEET 1				

ROW 1:															
SLOT	MODULE	SOCKET	DESCRIPTION	VENDOR											
	6ES7-151-1BA02-0AB0	N/A	IM 151	SIEMENS											
1	6ES7-138-4CA50-0AB0	6ES7-193-4CC20-0AA0	POWER MODULE PM-E	SIEMENS											
2	6ES7-138-4FA04-0AB0	6ES7-193-4CF40-0AA0	4/8 FDI 8 SAFE IN	SIEMENS											
3	6ES7-138-4FA04-0AB0	6ES7-193-4CF40-0AA0	4/8 FDI 8 SAFE IN	SIEMENS											
STA A1	STA/HLPRG/3PRG/24DC-AO [DIN]	N/A	THERMOCOUPLE SAFETY TRIP ALARM	MOORE											
STA A2	STA/HLPRG/3PRG/24DC-AO [DIN]	N/A	THERMOCOUPLE SAFETY TRIP ALARM	MOORE											
STA A3	STA/HLPRG/3PRG/24DC-AO [DIN]	N/A	THERMOCOUPLE SAFETY TRIP ALARM	MOORE											
STA A4	STA/HLPRG/3PRG/24DC-AO [DIN]	N/A	THERMOCOUPLE SAFETY TRIP ALARM	MOORE											
STA A5	STA/HLPRG/3PRG/24DC-AO [DIN]	N/A	THERMOCOUPLE SAFETY TRIP ALARM	MOORE											
ROW 2:															
TB1	[5]	[3]	1 [1]	2 [7]	[3]	3 [1]	4 [7]	[3]	5 [1]	6 [7]	[3]	7 [1]	8 [7]	[3]	9 [1]	10 [7]
TFB1	[6]	1>6 [8]	[10]	7>8 [9]	[2]										
BUTTON	COMPONENT		DESCRIPTION	VENDOR											
1	7400K41		POWER DISTRIBUTION BLOCK A	MCMASTER											
2	7400K41		POWER DISTRIBUTION BLOCK A	MCMASTER											
3	7400K41		POWER DISTRIBUTION BLOCK A	MCMASTER											
4	7400K41		POWER DISTRIBUTION BLOCK A	MCMASTER											
5	7400K41		POWER DISTRIBUTION BLOCK A	MCMASTER											
6	7400K41		POWER DISTRIBUTION BLOCK B	MCMASTER											
7	7400K41		POWER DISTRIBUTION BLOCK B	MCMASTER											
8	7400K41		POWER DISTRIBUTION BLOCK B	MCMASTER											
9	7400K41		POWER DISTRIBUTION BLOCK B	MCMASTER											
10	7400K41		POWER DISTRIBUTION BLOCK B	MCMASTER											
TFB2	[2]	1>2 [9]	[6]	3>8 [8]											
TB2	[3]	1 [1]	2 [7]	[3]	[1]	4 [7]	[3]	5 [1]	6 [7]	[3]	7 [1]	8 [7]	[3]	9 [1]	10 [7]	[5]
ROW 3:															
SLOT	MODULE	SOCKET	DESCRIPTION	VENDOR											
1	1734-AENTR	N/A	24V DC EHTERNET ADAPTER	AB											
2	1734-IB8S	1734-TOP 3	AB INPUT F 8 SAFETY IN	AB											
3	1734-IB8S	1734-TOP 3	AB INPUT F 8 SAFETY IN	AB											
STA B1	STA/HLPRG/3PRG/24DC-AO [DIN]	N/A	THERMOCOUPLE SAFETY TRIP ALARM	MOORE											
STA B2	STA/HLPRG/3PRG/24DC-AO [DIN]	N/A	THERMOCOUPLE SAFETY TRIP ALARM	MOORE											
STA B3	STA/HLPRG/3PRG/24DC-AO [DIN]	N/A	THERMOCOUPLE SAFETY TRIP ALARM	MOORE											
STA B4	STA/HLPRG/3PRG/24DC-AO [DIN]	N/A	THERMOCOUPLE SAFETY TRIP ALARM	MOORE											
STA B5	STA/HLPRG/3PRG/24DC-AO [DIN]	N/A	THERMOCOUPLE SAFETY TRIP ALARM	MOORE											

REV	DESCRIPTION	DATE	BY	CHECKED	APP
	SEE SHEET 1				

Paired part numbers are color coordinated.

	[1]
TYPE	
Double-level terminal block - UTTB 2,5	
GROUND	
End cover - D-UTTB 2,5/4	
Spacer plate - DP-UTTB 2,5/4	[2]
End clamp - E/UK 1	
End Plate; Term Blk; DIN Rail; Gray;	
DIN Rail Terminal Blocks UT 2 5/4-QUATTRO	
24V FUSES	
Feed-through terminal block - UT 2,5	
End cover - D-UT 2,5/10	[3]
End cover - D-UT 2,5/4-QUATTRO	
Feed-through terminal block - UT 4	
Feed-through terminal block - UDK 4	
KONNECT IT 3 CIRCUIT TERMINAL BLOCK	
3 CIRCUIT TERMINAL BLOCK COVER	
99321 ALTECH DIODE TERMINAL BLOCK	[4]
ALTECH DIODE TB END COVER	
Diode TB - UTTB 2,5 O-UL/UR-UL	
	[5]
	[6]

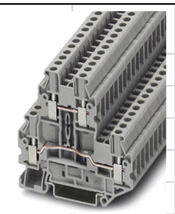

[7]	
[8]	
[9]	
[10]	
[11]	
[12]	

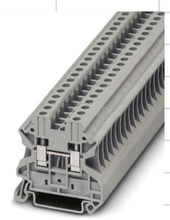

[13]	
[14]	
[15]	
[16]	
[17]	
[18]	

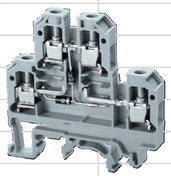

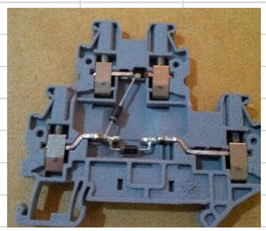

LT-EL-BL-EI DRAWING DIRECTORY	LT-EL-BL-EI-PPS-1230-92 DRAWING NUMBER	B REV
COMPUTER REPRODUCIBLE	SCALE: N/A	SHEET 14 OF 14

LT-EL-BL-EI-PPS-1230-92

REV	DESCRIPTION	DATE	BY	CHECKED	APP
A	INITIAL RELEASE	9/08/2014	SEJ	JM	SB
B	REVISED PER ECN LT-ECN-016-1604	9/08/2016	SEJ	JM	SB

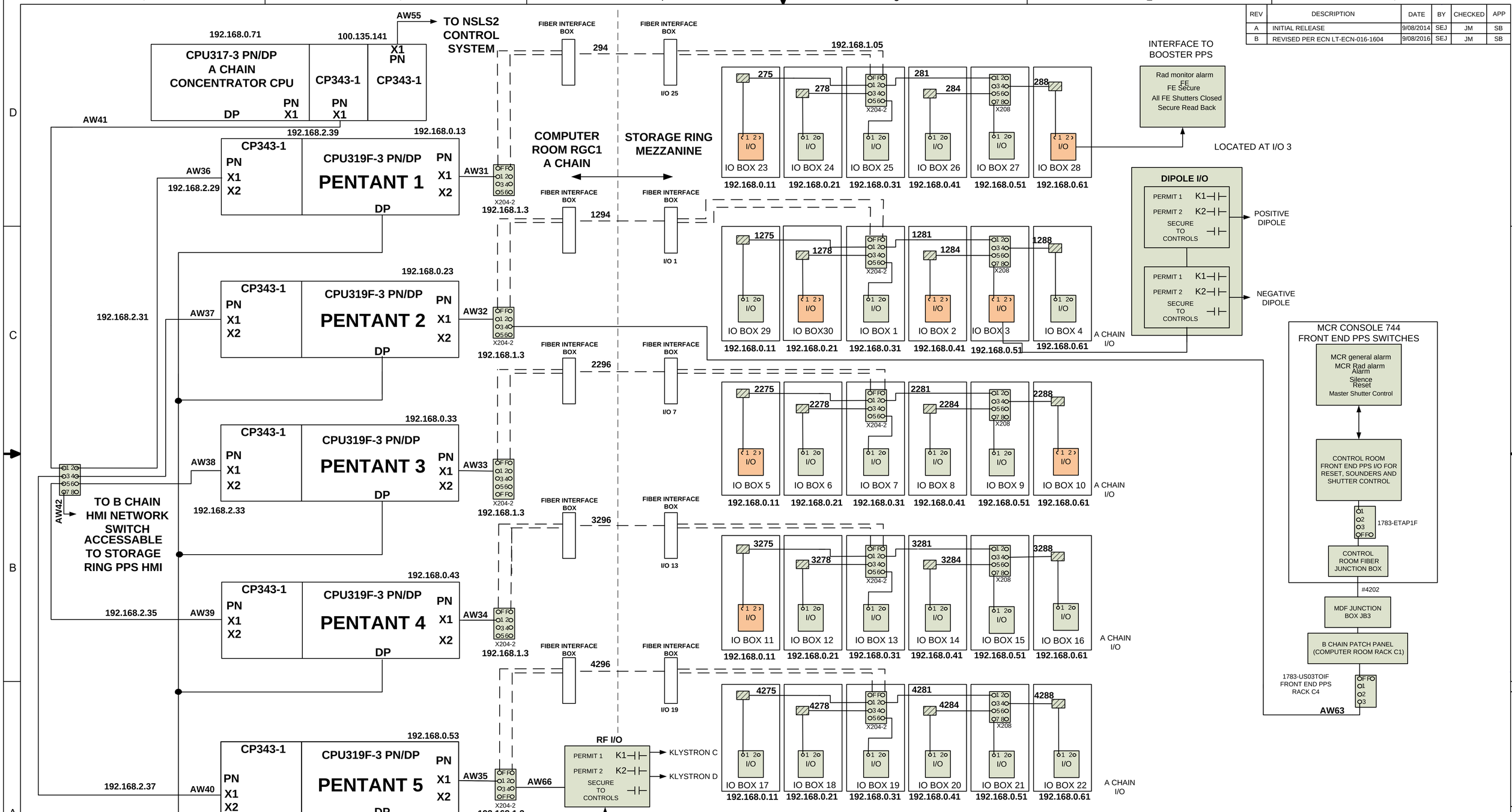

LT-EL-BL-EI-PPS-0101-90

BROOKHAVEN NATIONAL LABORATORY

BROOKHAVEN NATIONAL LABORATORY
BROOKHAVEN SCIENCE ASSOCIATES
UPTON, NEW YORK 11973
Exploring Life's Mysteries, Protecting Its Future

NSLSII NATIONAL SYNCHROTRON LIGHT SOURCE II

UNLESS OTHERWISE SPECIFIED INTEGER TOLERANCES ± .06
DECIMAL TOLERANCES .X ± .030 .XX ± .015 .XXX ± .010
ANGULAR TOLERANCE ± 0.5°
UNSPECIFIED RADII .02 MAX
125 BREAK SHARP CORNERS AND EDGES
FINISH MAX .03 MIN .005

UNLESS OTHERWISE SPECIFIED DIMENSIONS ARE IN INCHES DIMENSIONS IN [ ] ARE MILLIMETERS EQUIV. FOR REF. ONLY
INTERPRET DRAWING AS PER ANSI Y14.5 OR Y32.2
ESH&Q RISK LEVEL A-1
OUTSTANDING ECN'S

		DATE
DRWN BY	S. Jarzabkowski	9/08/2014
CHK BY	J. Malley	9/08/2014
ENG APP	S. Buda	9/08/2014
SUPV APP	G. Ganetis	9/10/2014
QA APP	E. Cheswick	9/08/2014
ESH APP	R. Lee	9/10/2014

WIRING DIAGRAM, FRONT END PPS CPU RACK A CHAIN

LT-EL-BL-EI (DRAWING DIRECTORY) | LT-EL-BL-EI-PPS-0101-90 (DRAWING NUMBER) | B (REV.)

COMPUTER REPRODUCIBLE | SCALE: N/A | SHEET 1 OF 5

JOB NUMBER | USED ON DWG. NO.

REV	DESCRIPTION	DATE	BY	CHECKED	APP
	SEE SHEET 1				

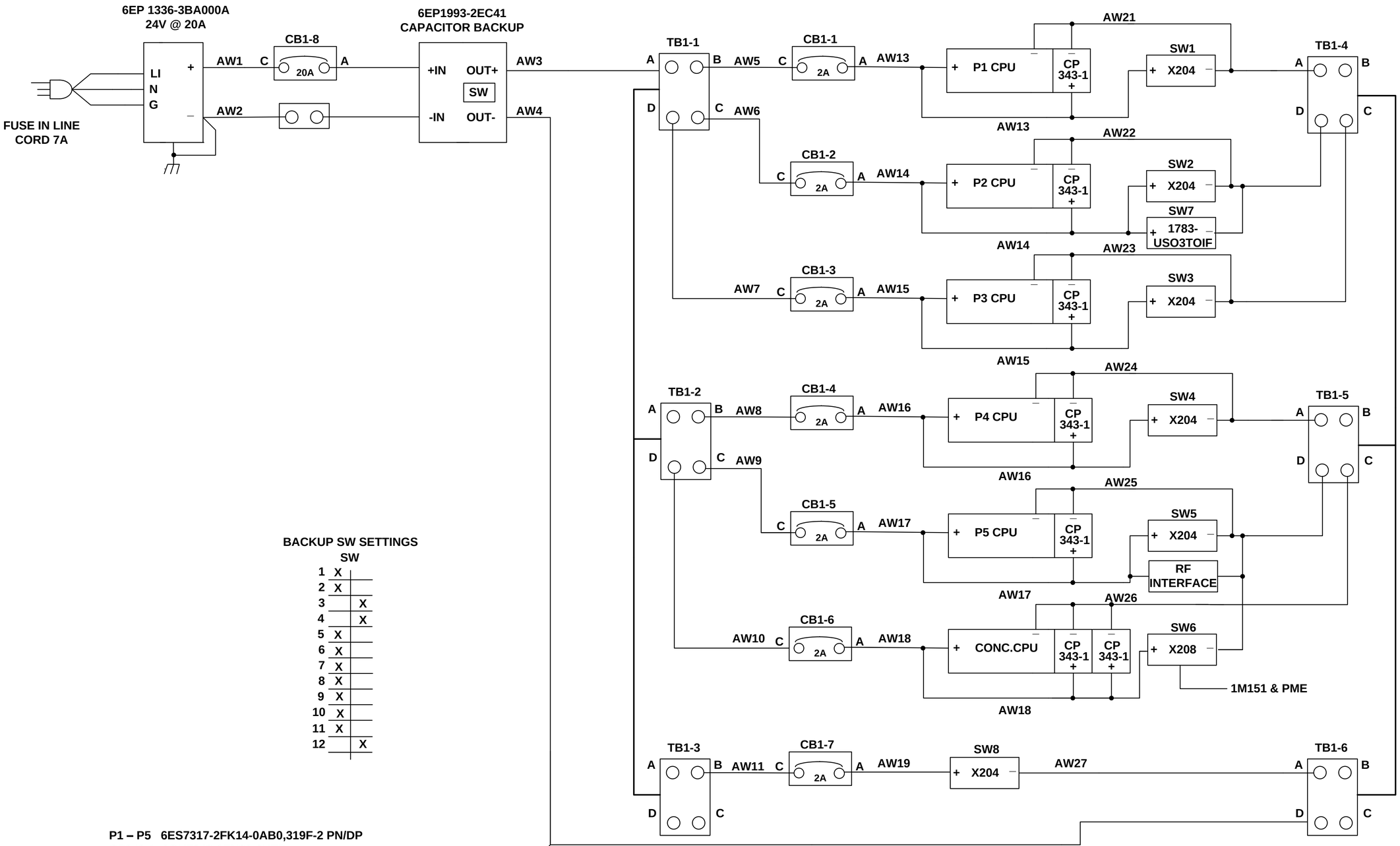

BACKUP SW SETTINGS

	SW	
1	X	
2	X	
3		X
4		X
5	X	
6	X	
7	X	
8	X	
9	X	
10	X	
11	X	
12		X

P1 – P5 6ES7317-2FK14-0AB0,319F-2 PN/DP
CP343-1 6GK7343-1EX30-0XED
SW2 6GK52061-1BB10-2AA3,X206-1
SW1,5 & 8 6GK55204-2BB10-2AA3,X204-2
SW6 6GK5208-OBA10-2AA3,X208
SW7 1783-USO3TOIF

LT-EL-BL-EI-PPS-0101-90

LT-EL-BL-EI (DRAWING DIRECTORY)	LT-EL-BL-EI-PPS-0101-90 (DRAWING NUMBER)	B (REV)
COMPUTER REPRODUCIBLE	SCALE: N/A	SHEET 2 OF 5

REV	DESCRIPTION	BY	DATE	CHK	APP
	SEE SHEET 1				

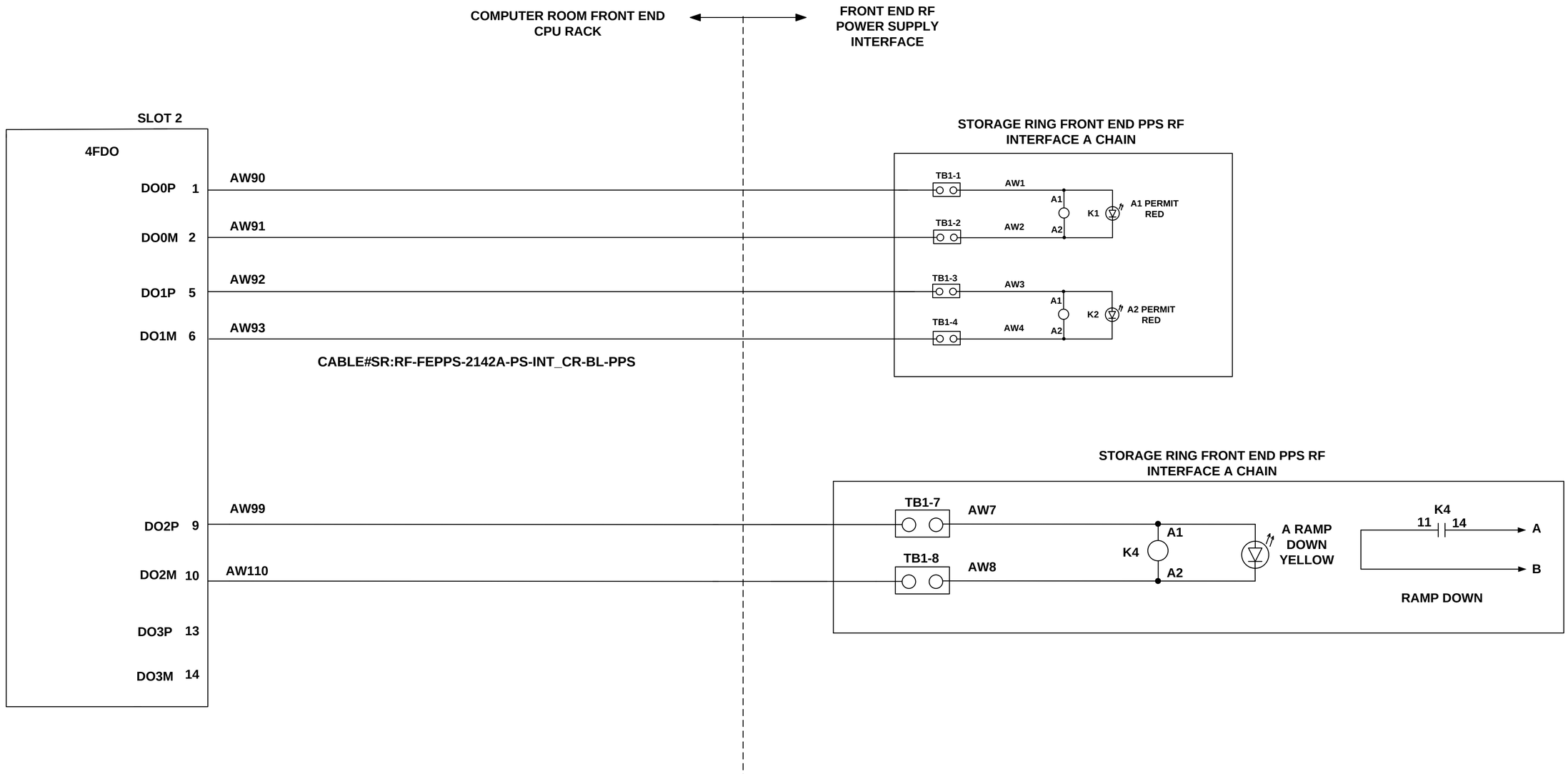

A

LT-EL-BL-EI	LT-EL-BL-EI-PPS-0101-90	B
DRAWING DIRECTORY	DRAWING NUMBER	REV

COMPUTER REPRODUCIBLE | SCALE: N/A | SHEET 3 OF 5

LT-EL-BL-EI-PPS-0101-90

REV	DESCRIPTION	BY	DATE	CHK	APP
	SEE SHEET 1				

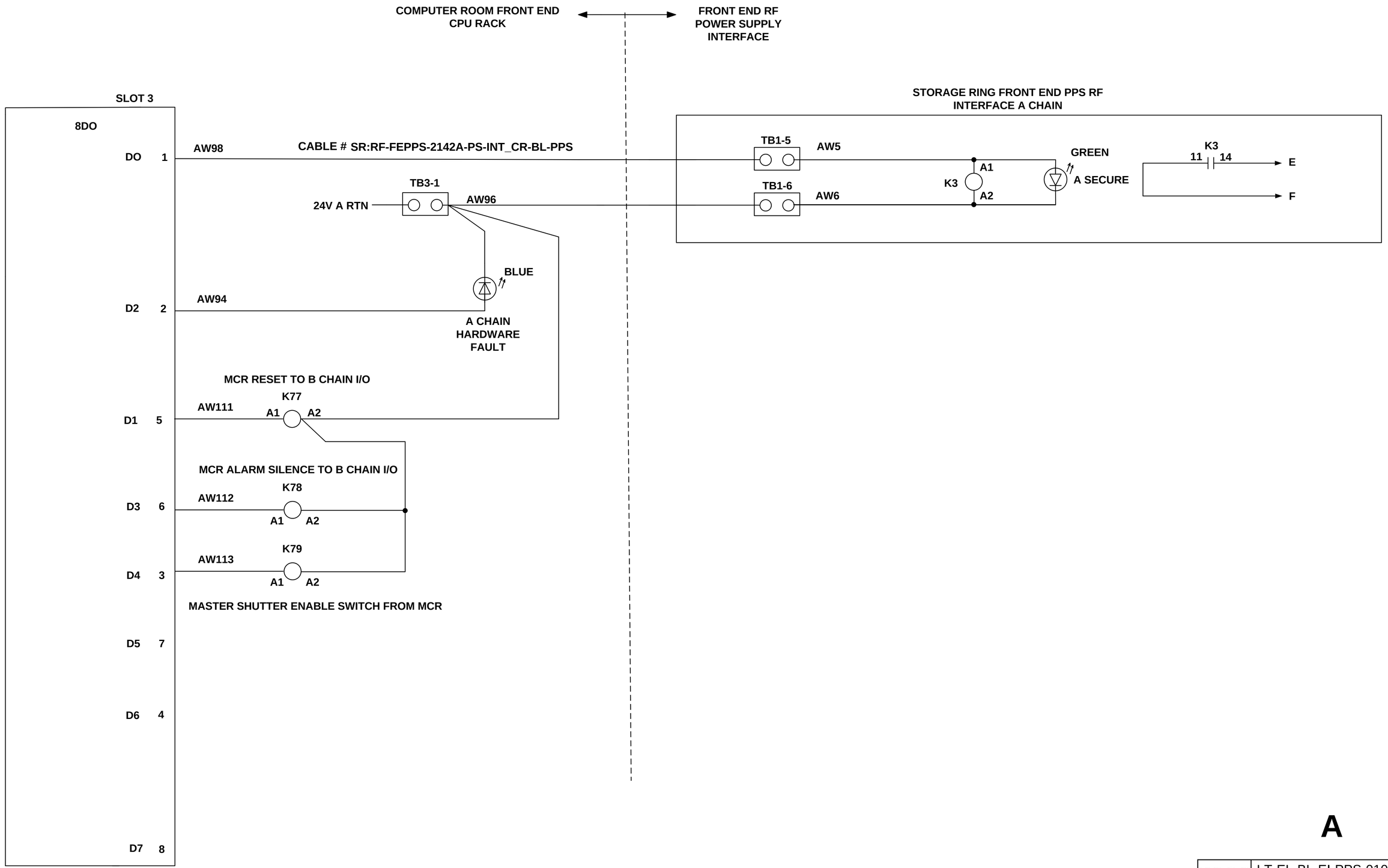

A

LT-EL-BL-EI	LT-EL-BL-EI-PPS-0101-90	B
DRAWING DIRECTORY	DRAWING NUMBER	REV

COMPUTER REPRODUCIBLE | SCALE: N/A | SHEET 4 OF 5

LT-EL-BL-EI-PPS-0101-90

REV	DESCRIPTION	BY	DATE	CHK	APP
	SEE SHEET 1				

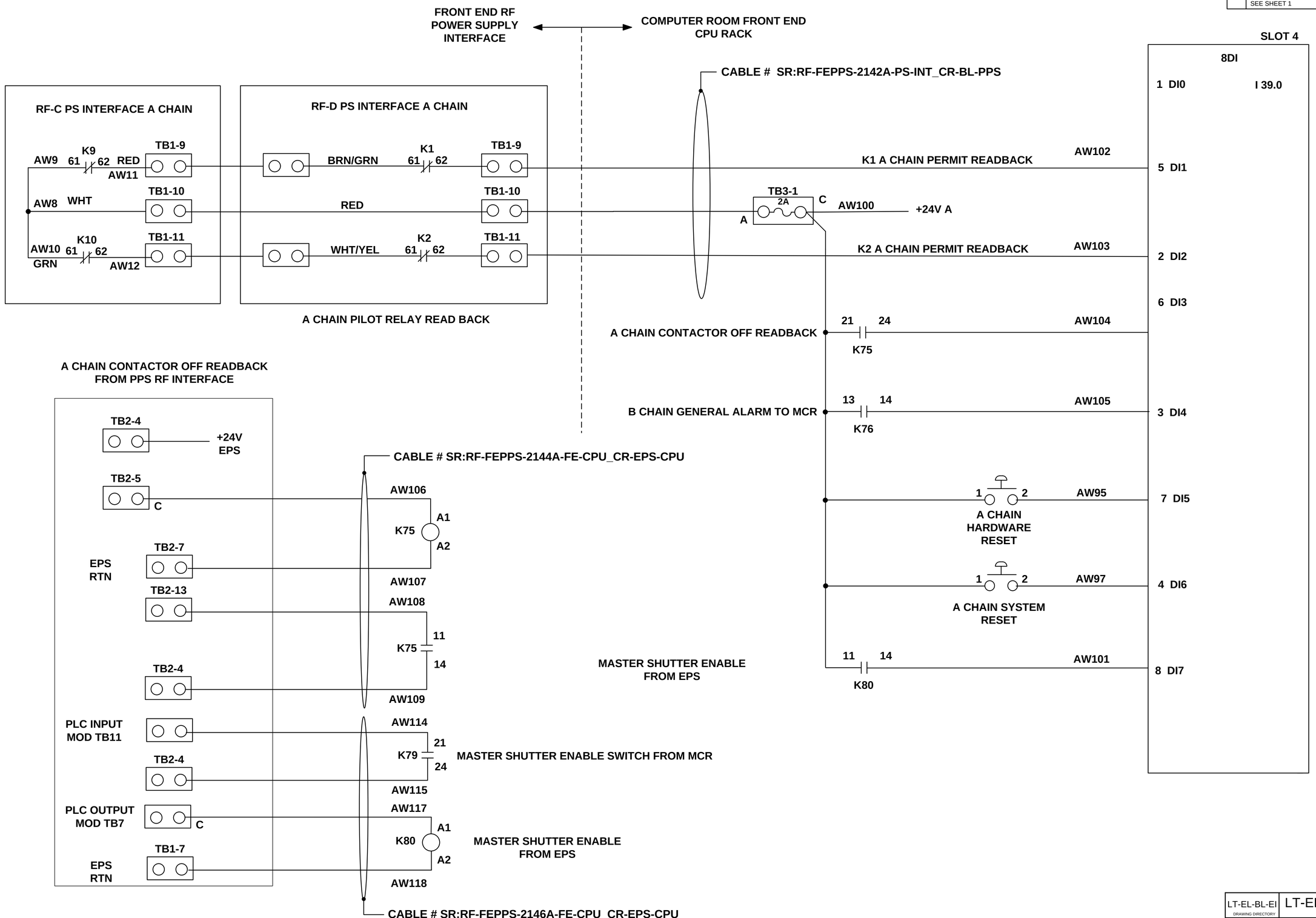

A

LT-EL-BL-EI	LT-EL-BL-EI-PPS-0101-90	B
DRAWING DIRECTORY	DRAWING NUMBER	REV

COMPUTER REPRODUCIBLE | SCALE: N/A | SHEET 5 OF 5

LT-EL-BL-EI-PPS-0101-90

REV	DESCRIPTION	DATE	BY	CHECKED	APP
A	INITIAL RELEASE	9/08/2014	SEJ	JM	SB
B	REVISED PER ECN LT-ECN-016-1605	9/08/2016	SEJ	JM	SB

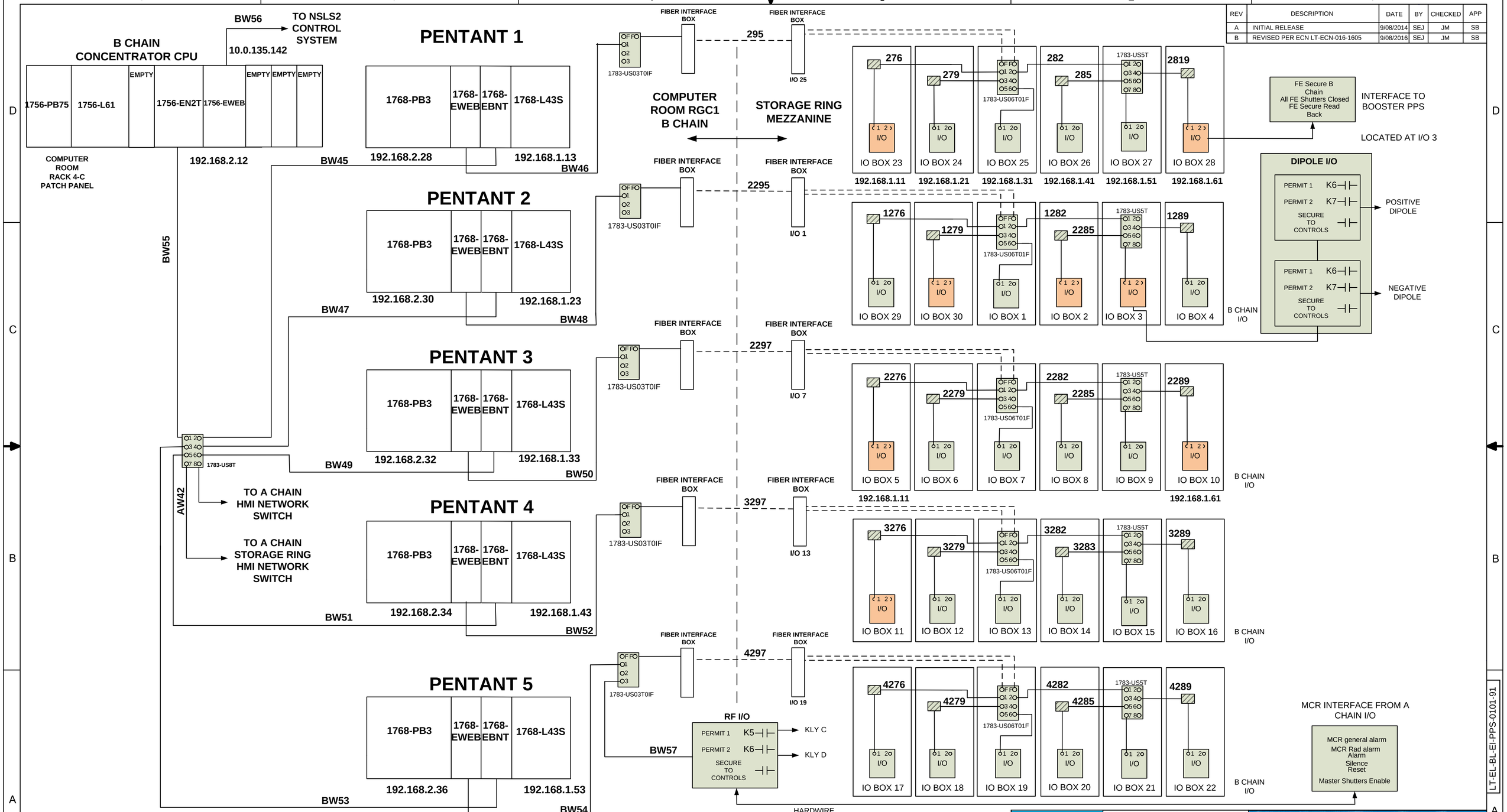

BROOKHAVEN NATIONAL LABORATORY

BROOKHAVEN NATIONAL LABORATORY
BROOKHAVEN SCIENCE ASSOCIATES
UPTON, NEW YORK 11973
Exploring Life's Mysteries, Protecting its Future

NSLS II NATIONAL SYNCHROTRON LIGHT SOURCE II

UNLESS OTHERWISE SPECIFIED
INTEGER TOLERANCES ± .06
DECIMAL TOLERANCES
.X ± .030
.XX ± .015
.XXX ± .010
ANGULAR TOLERANCE ± 0.5°
UNSPECIFIED RADII .02 MAX
125 BREAK SHARP CORNERS AND EDGES
FINISH MAX .03 MIN .005

UNLESS OTHERWISE SPECIFIED DIMENSIONS ARE IN INCHES DIMENSIONS IN [ ] ARE MILLIMETERS EQUIV. FOR REF. ONLY
INTERPRET DRAWING AS PER ANSI Y14.5 OR Y32.2

ESH&Q RISK LEVEL A-1
OUTSTANDING ECN'S

		DATE
DRWN BY	S. Jarzabkowski	9/08/2014
CHK BY	J. Malley	9/08/2014
ENG APP	S. Buda	9/08/2014
SUPV APP	G. Ganetis	9/10/2014
QA APP	E. Cheswick	9/08/2014
ESH APP	R. Lee	9/10/2014

WIRING DIAGRAM, FRONT END PPS CPU RACK B CHAIN

LT-EL-BL-EI (DRAWING DIRECTORY) | LT-EL-BL-EI-PPS-0101-91 (DRAWING NUMBER) | B (REV)

COMPUTER REPRODUCIBLE | SCALE: N/A | SHEET 1 OF 5

JOB NUMBER | USED ON DWG. NO.

LT-EL-BL-EI-PPS-0101-91

REV	DESCRIPTION	DATE	BY	CHECKED	APP
	SEE SHEET 1				

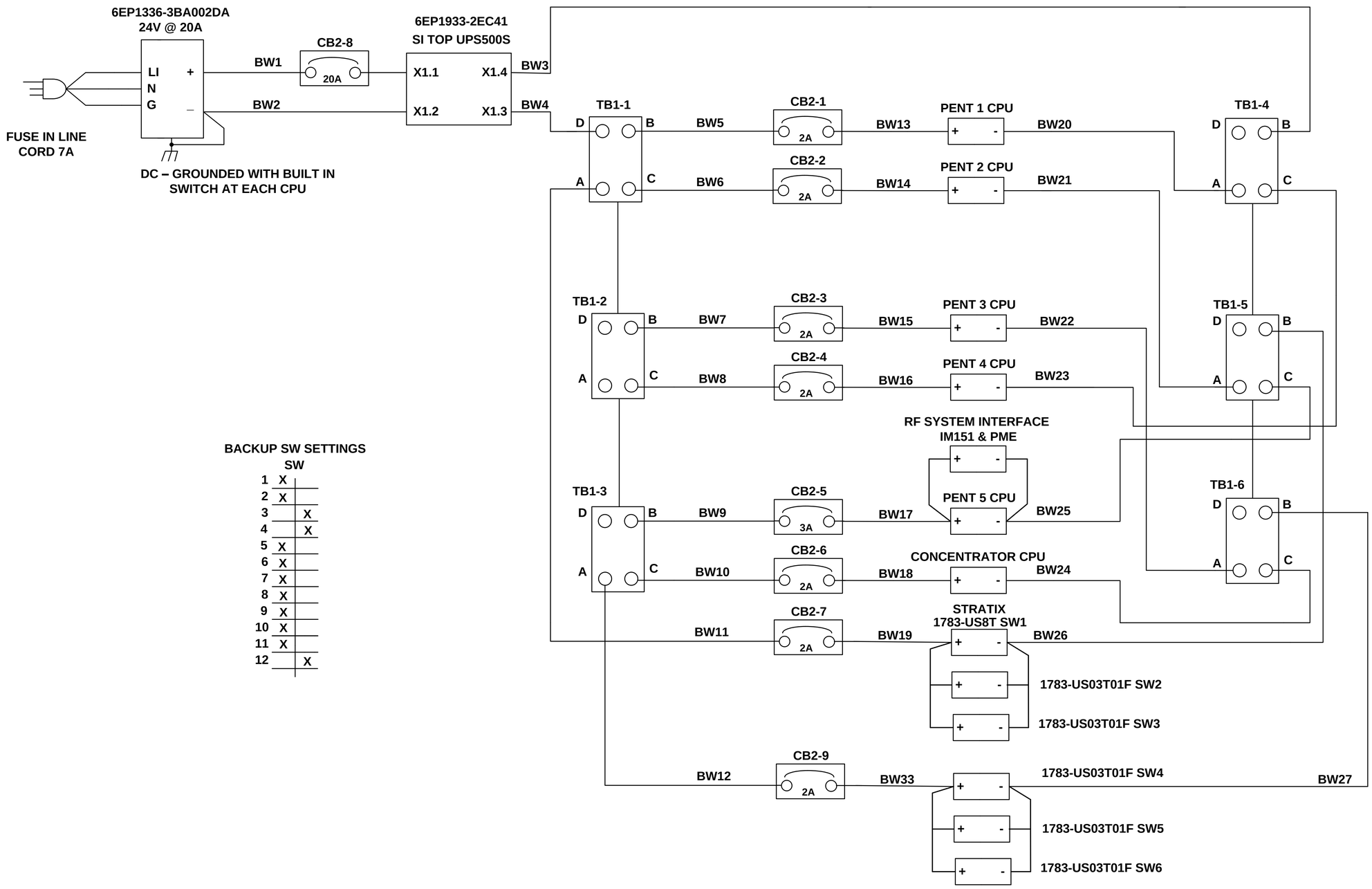

BACKUP SW SETTINGS

	SW	
1	X	
2	X	
3		X
4		X
5	X	
6	X	
7	X	
8	X	
9	X	
10	X	
11	X	
12		X

LT-EL-BL-EI-PPS-0101-91

LT-EL-BL-EI	LT-EL-BL-EI-PPS-0101-91	B
DRAWING DIRECTORY	DRAWING NUMBER	REV
COMPUTER REPRODUCIBLE	SCALE: N/A	SHEET 2 OF 5

REV	DESCRIPTION	BY	DATE	CHK	APP
	SEE SHEET 1				

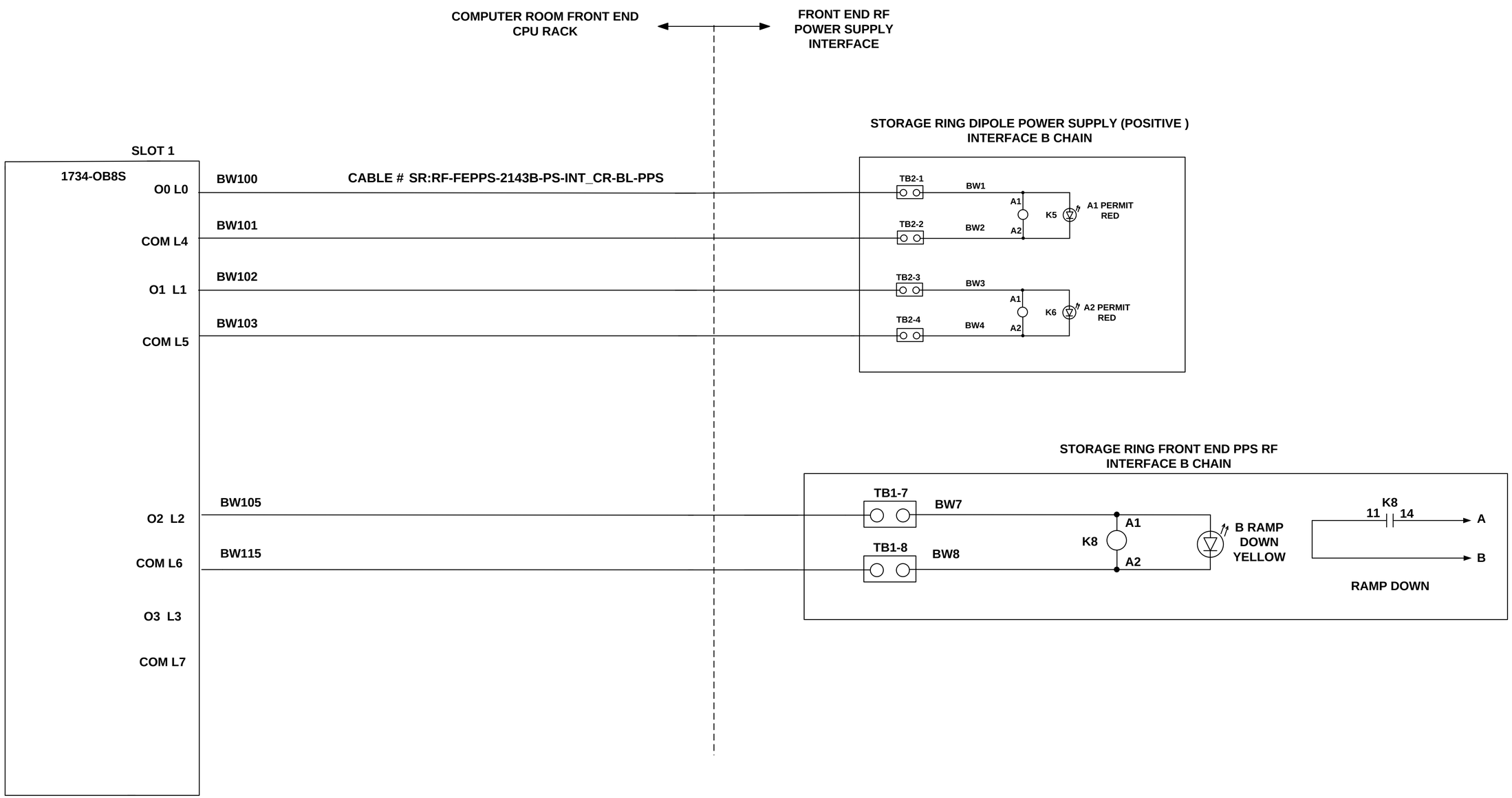

B

LT-EL-BL-EI	LT-EL-BL-EI-PPS-0101-91	B
DRAWING DIRECTORY	DRAWING NUMBER	REV

COMPUTER REPRODUCIBLE | SCALE: N/A | SHEET 3 OF 5

LT-EL-BL-EI-PPS-0101-91

REV	DESCRIPTION	BY	DATE	CHK	APP
	SEE SHEET 1				

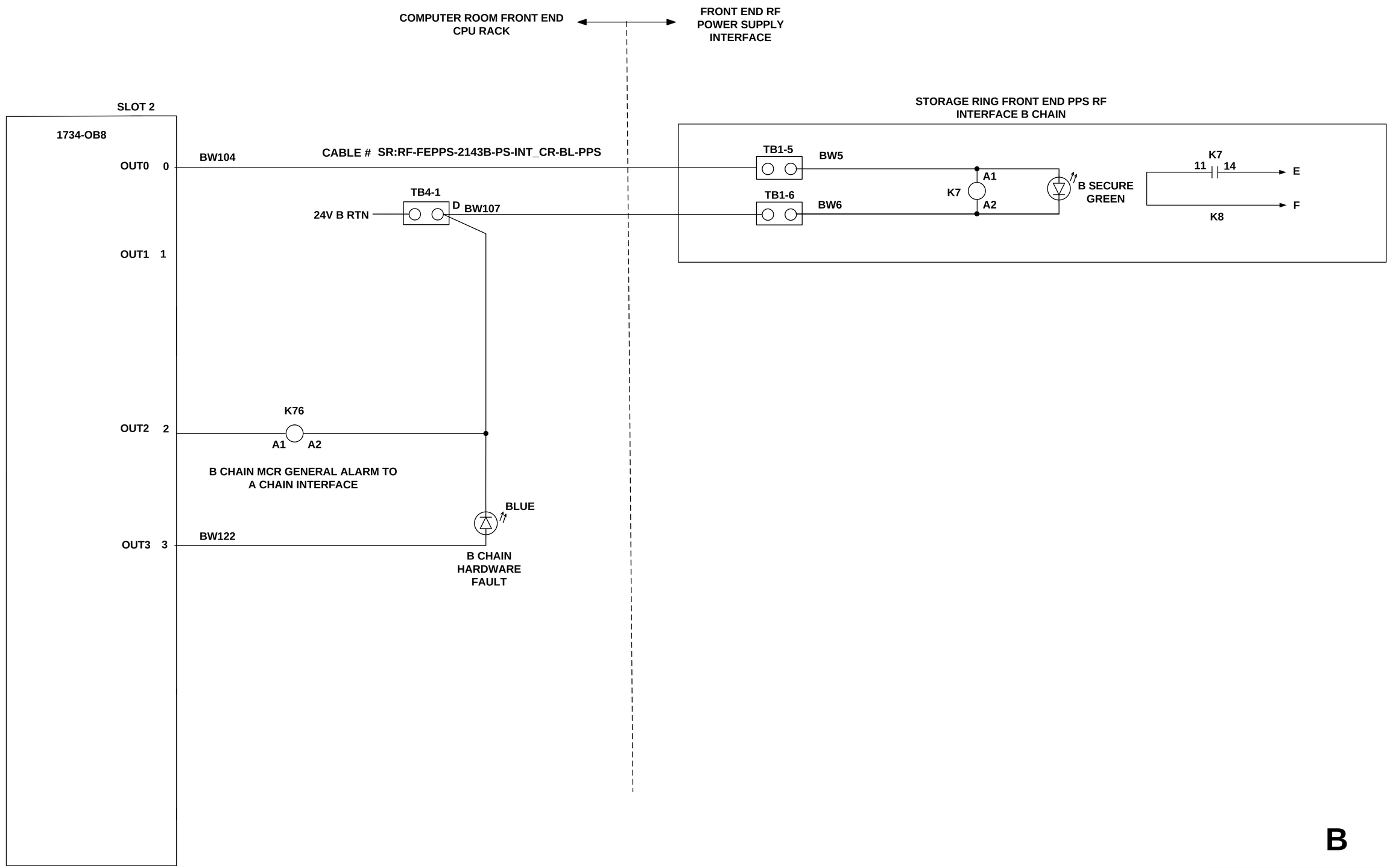

B

LT-EL-BL-EI	LT-EL-BL-EI-PPS-0101-91	B
DRAWING DIRECTORY	DRAWING NUMBER	REV.

COMPUTER REPRODUCIBLE | SCALE: N/A | SHEET 4 OF 5

LT-EL-BL-EI-PPS-0101-91

REV	DESCRIPTION	BY	DATE	CHK	APP
	SEE SHEET 1				

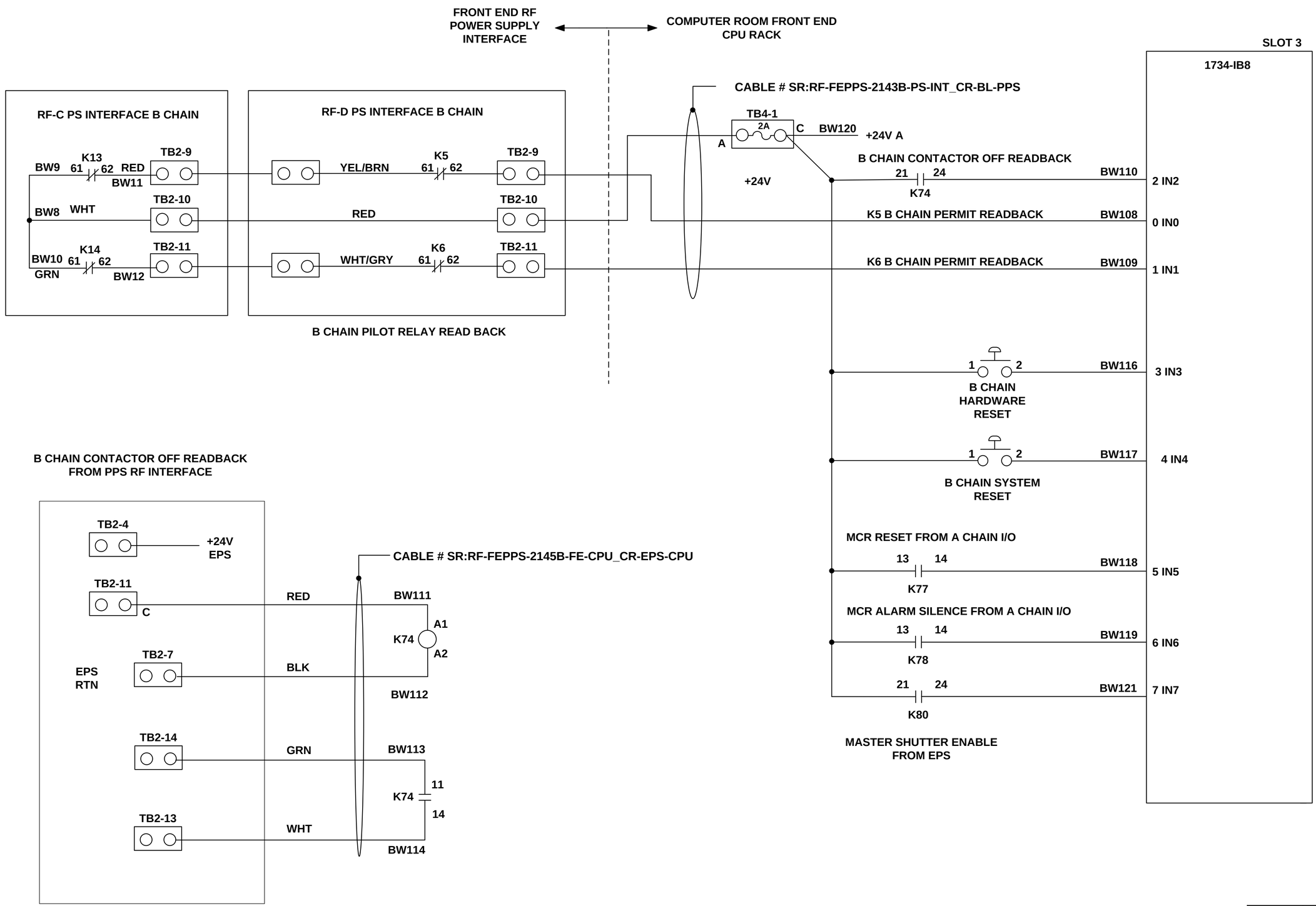

B

LT-EL-BL-EI (DRAWING DIRECTORY)	LT-EL-BL-EI-PPS-0101-91 (DRAWING NUMBER)	B (REV)
COMPUTER REPRODUCIBLE	SCALE: N/A	SHEET 5 OF 5

LT-EL-BL-EI-PPS-0101-91

REV	DESCRIPTION	BY	DATE	CHK	APP
A	PRELIMINARY RELEASE	CG	5-12-11	JM	SB
B	REVISED PER LT-ECN-011-314	CG	6-21-11	JM	SB
C	REVISED PER LT-ECN-012-384	CG	12-7-11	JM	SB
D	REVISED PER LT-ECN-013-529	CG	4-23-13	JM	SB
E	REVISED PER LT-ECN-013-646	CG	9-20-13	JM	SB
F	REVISED PER LT-ECN-014-686	SEJ	10/17/13	JM	SB
G	REVISED PER LT-ECN-014-718	CG	1/6/14	JM	SB
H	REVISED PER LT-ECN-014-766	SEJ	3/16/2014	JM	SB
J	REVISED PER LT-ECN-014-944	CG	7/09/2014	JM	SB
K	REVISED PER LT-ECN-014-978	SEJ	9/02/2014	JM	SB
L	REVISED PER LT-ECN-015-1035	CG	11-20-14	JM	SB
M	REVISED PER LT-ECN-015-1098	SEJ	12-22-14	JM	SB

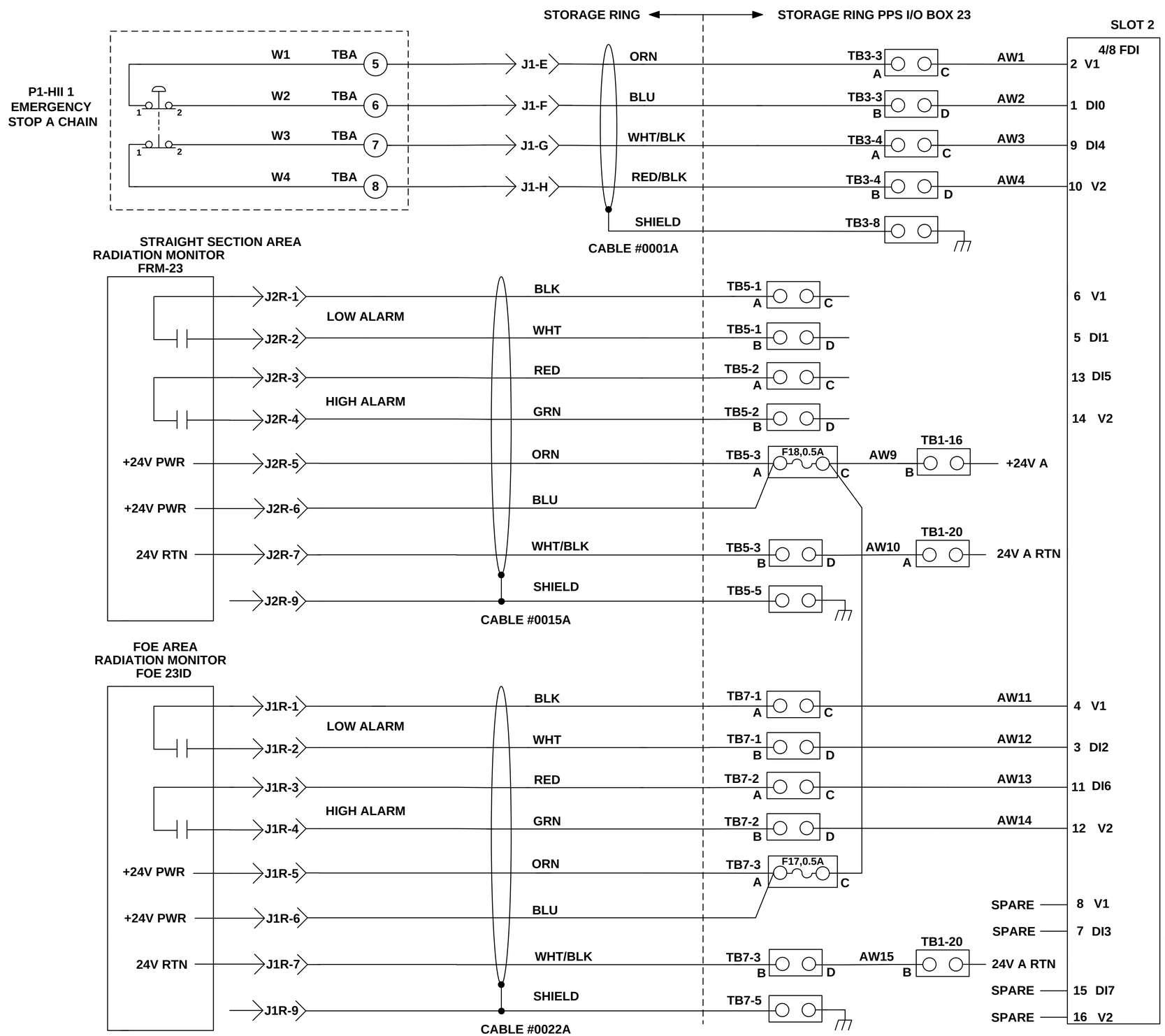

ID BEAMLINE INSTALLED [X]

BM BEAMLINE INSTALLED [ ]

SHUTTER OVERTEMPERATURE CIRCUITRY NOT USED

COMMON GROUP

A

HIGHEST WIRE REF DES	AW15
UNUSED WIRE REF DES	AW16-AW21
WIRE REF DES NOT USED	AW5,6,7,8.

SEE SEPARATE WIRE RUNNING LIST RL LT-EL-SR-EI-PPS-0223-90

SEE SEPARATE PARTS LIST PL LT-EL-SR-EI-PPS-0223-90

LT-EL-SR-EI-PPS-0223-90

BROOKHAVEN NATIONAL LABORATORY

BROOKHAVEN NATIONAL LABORATORY
BROOKHAVEN SCIENCE ASSOCIATES
UPTON, NEW YORK 11973
Exploring Life's Mysteries, Protecting its Future

NSLSII NATIONAL SYNCHROTRON LIGHT SOURCE II

UNLESS OTHERWISE SPECIFIED
INTEGER TOLERANCES ± .06
DECIMAL TOLERANCES .X ± .030 .XX ± .015 .XXX ± .010
ANGULAR TOLERANCE ± 0.5°
UNSPECIFIED RADII .02 MAX
125 FINISH BREAK SHARP CORNERS AND EDGES MAX .03 MIN .005

UNLESS OTHERWISE SPECIFIED DIMENSIONS ARE IN INCHES DIMENSIONS IN [**] ARE MILLIMETERS EQUIV. FOR REF. ONLY
INTERPRTN DRAWING AS PER ANSI Y14.5 OR Y32.2

ESH&Q RISK LEVEL A-1

		DATE	OUTSTANDING ECN'S
DRWN BY	C.GUARINO	4-11-11	
CHK BY	J.MALLEY	4-25-11	
ENG APP	S.BUDA	4-19-11	
SUPV APP	G.GANETIS	4-29-11	
QA APP	E.CHESWICK	4-28-11	
ESH APP	N.GMUR	4-28-11	

WIRING DIAGRAM
STORAGE RING PPS I/O BOX 23
TYPE 1 A CHAIN & B CHAIN

LT-EL-SR-EI (DRAWING DIRECTORY) | LT-EL-SR-EI-PPS-0223-90 (DRAWING NUMBER) | M (REV)

WBS # 1.03.06.01.03 | SCALE: N/A | SHEET 1 OF 63

JOB NUMBER | USED ON DWG. NO.

REV	DESCRIPTION	BY	DATE	CHK	APP
	SEE SHEET 1				

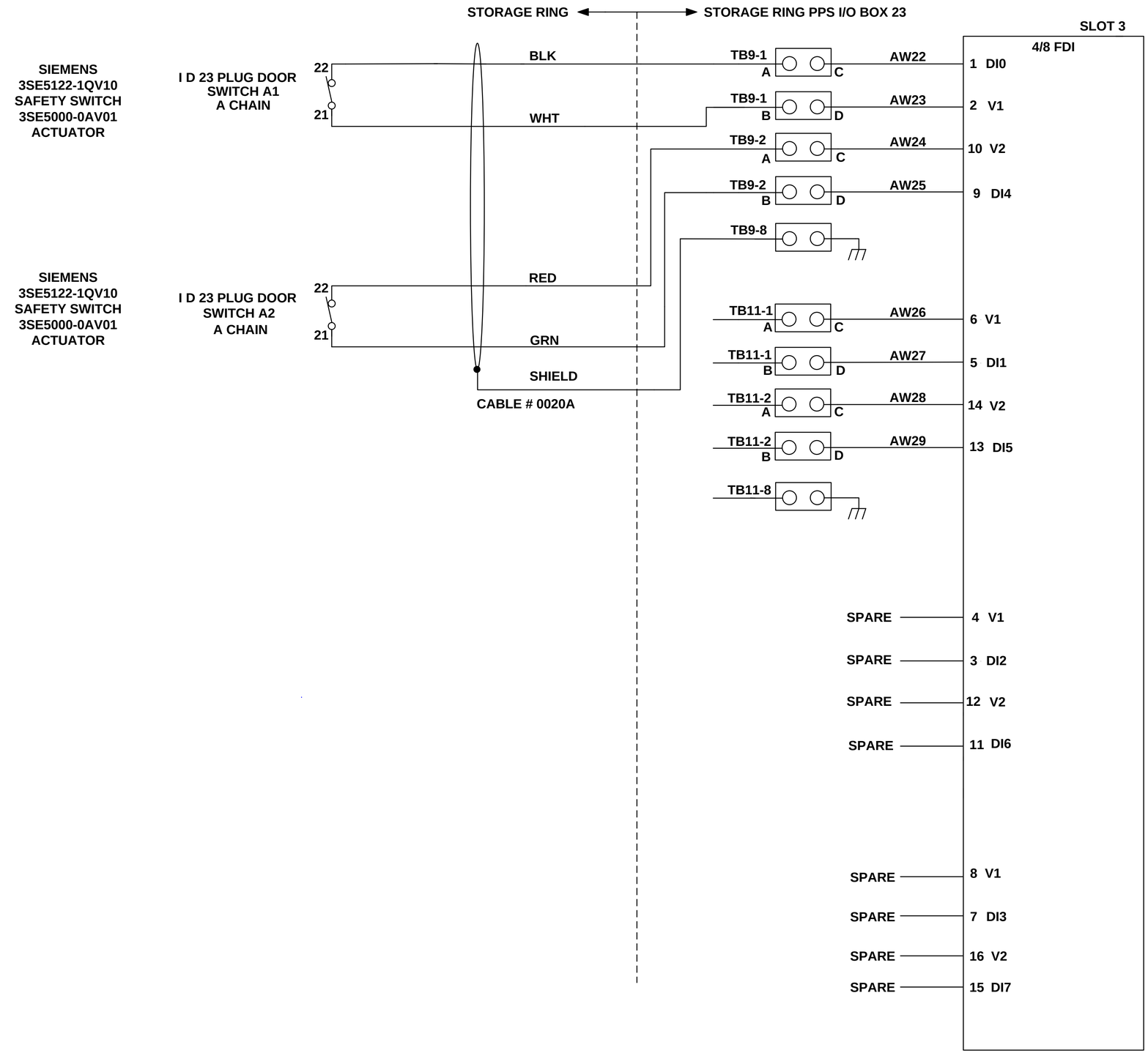

COMMON GROUP

A

HIGHEST WIRE REF DES	AW29
UNUSED WIRE REF DES	AW30-AW34
WIRE REF DES NOT USED	————

LT-EL-SR-EI-PPS-0223-90

LT-EL-SR-EI DRAWING DIRECTORY	LT-EL-SR-EI-PPS-0223-90 DRAWING NUMBER	M REV
COMPUTER REPRODUCIBLE	SCALE: N/A	SHEET 2 OF 63

REV	DESCRIPTION	BY	DATE	CHK	APP
	SEE SHEET 1				

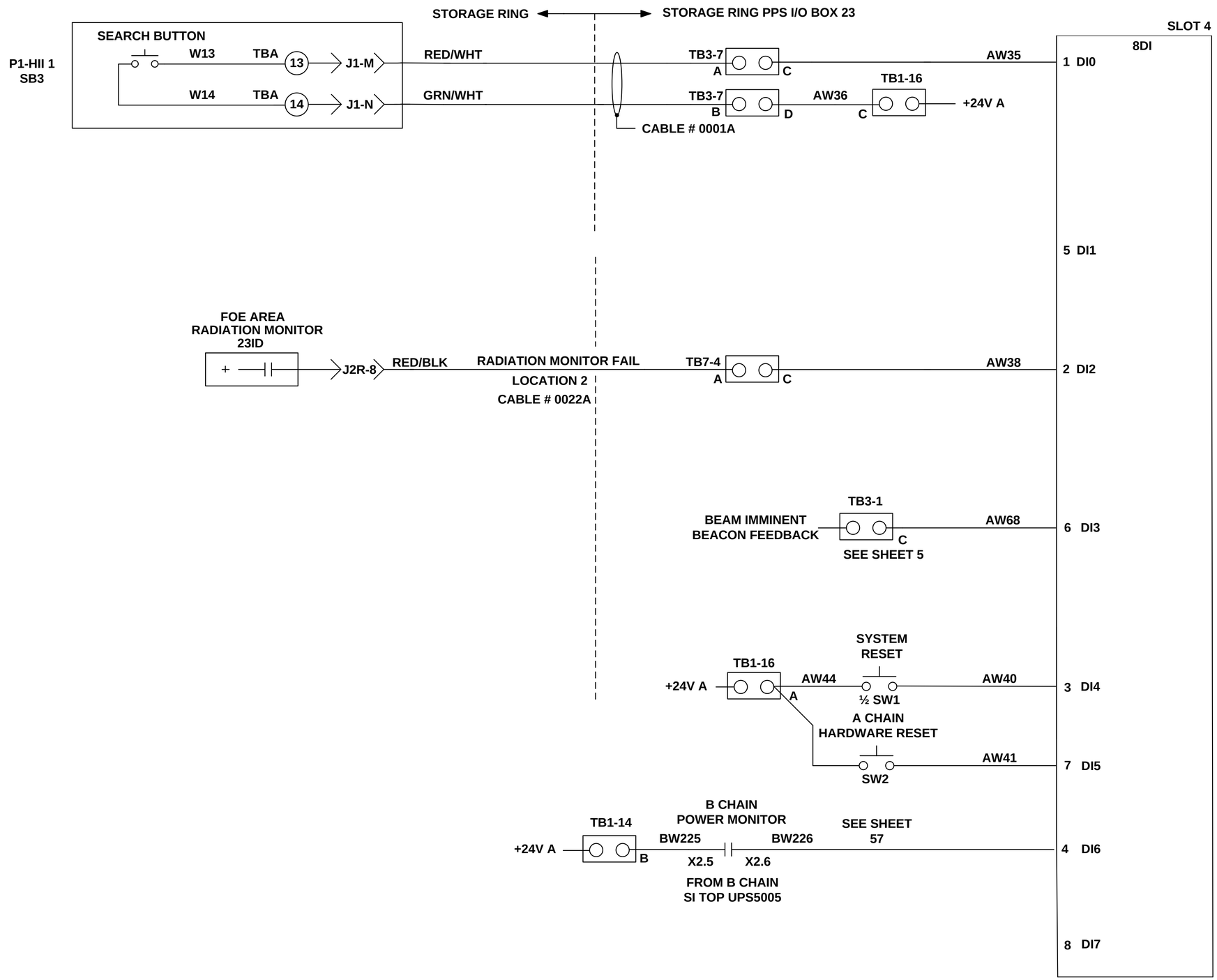

COMMON GROUP

A

HIGHEST WIRE REF DES	AW68
UNUSED WIRE REF DES	AW45,AW46
WIRE REF DES NOT USED	AW39,AW42

LT-EL-SR-EI-PPS-0223-90

LT-EL-SR-EI	LT-EL-SR-EI-PPS-0223-90	M
DRAWING DIRECTORY	DRAWING NUMBER	REV
COMPUTER REPRODUCIBLE	SCALE: N/A	SHEET 3 OF 63

REV	DESCRIPTION	BY	DATE	CHK	APP
	SEE SHEET 1				

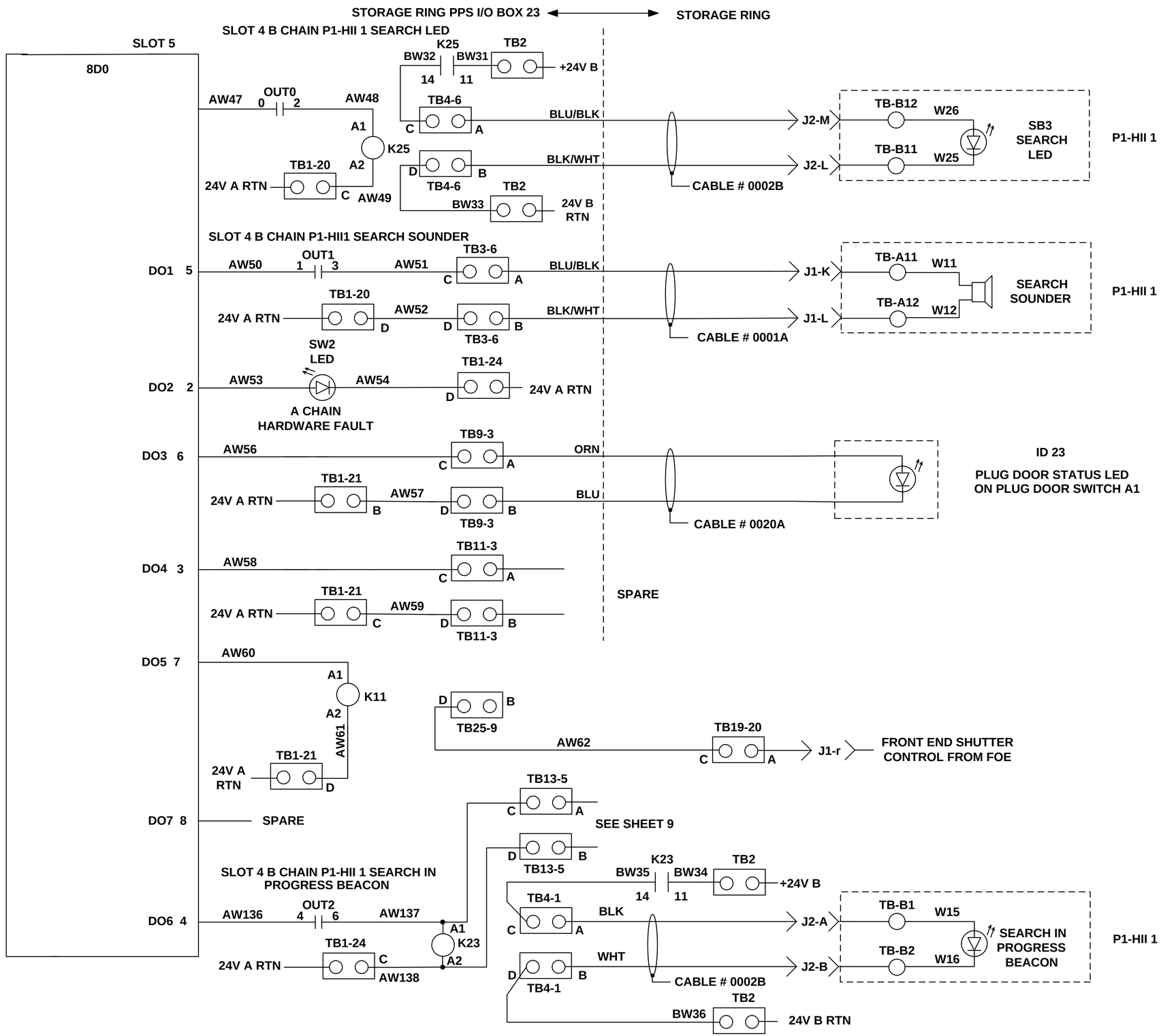

COMMON GROUP

A

HIGHEST WIRE REF DES	AW138
UNUSED WIRE REF DES	AW64
WIRE REF DES NOT USED	AW55

LT-EL-SR-EI-PPS-0223-90

LT-EL-SR-EI (DRAWING DIRECTORY)	LT-EL-SR-EI-PPS-0223-90 (DRAWING NUMBER)	M (REV)
COMPUTER REPRODUCIBLE	SCALE: N/A	SHEET 4 OF 63

REV	DESCRIPTION	BY	DATE	CHK	APP
	SEE SHEET 1				

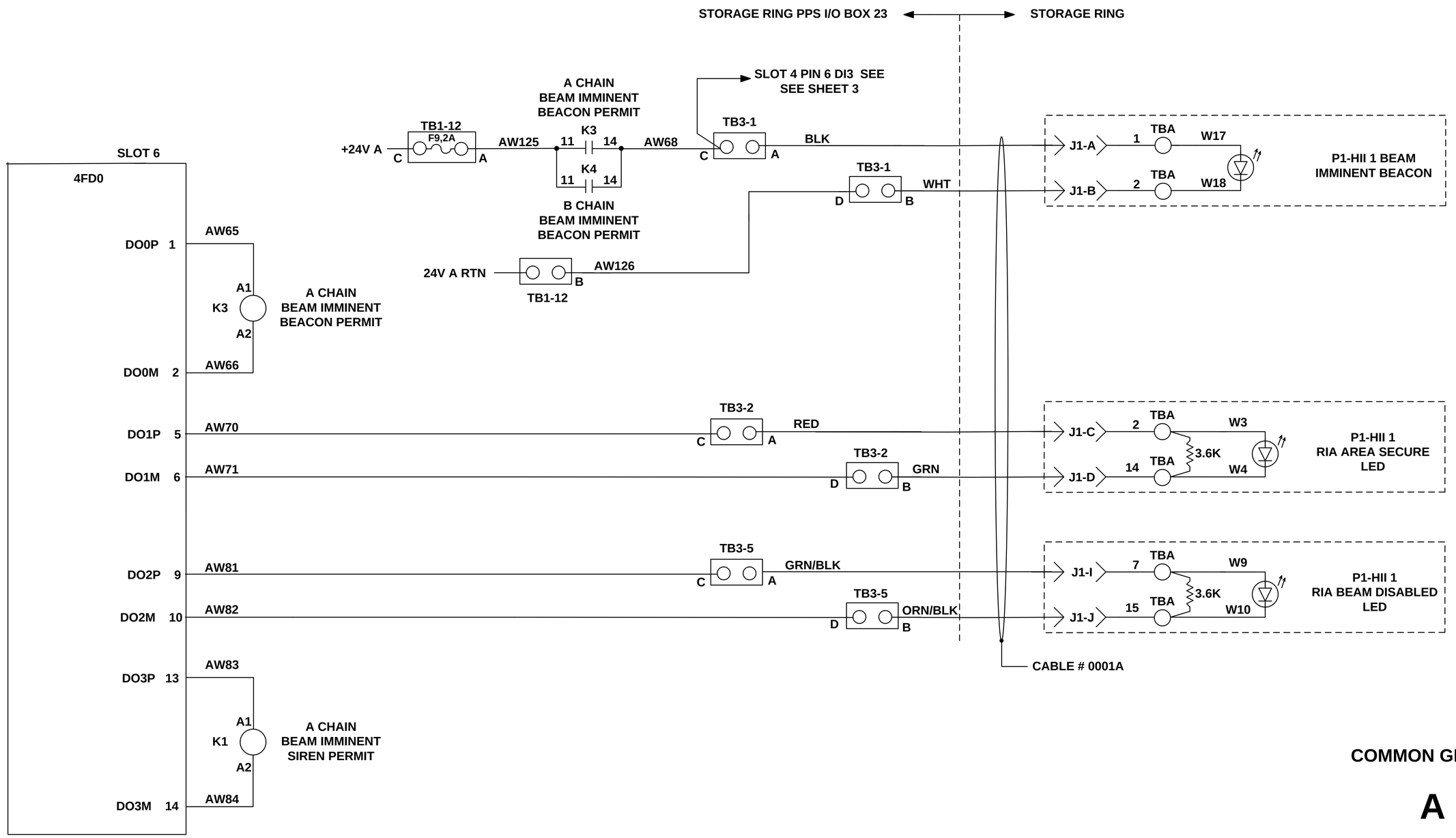

COMMON GROUP

A

HIGHEST WIRE REF DES	AW84
UNUSED WIRE REF DES	AW74-AW80
WIRE REF DES NOT USED	————

LT-EL-SR-EI-PPS-0223-90

LT-EL-SR-EI DRAWING DIRECTORY	LT-EL-SR-EI-PPS-0223-90 DRAWING NUMBER	M REV
COMPUTER REPRODUCIBLE	SCALE: N/A	SHEET 5 OF 63

REV	DESCRIPTION	BY	DATE	CHK	APP
	SEE SHEET 1				

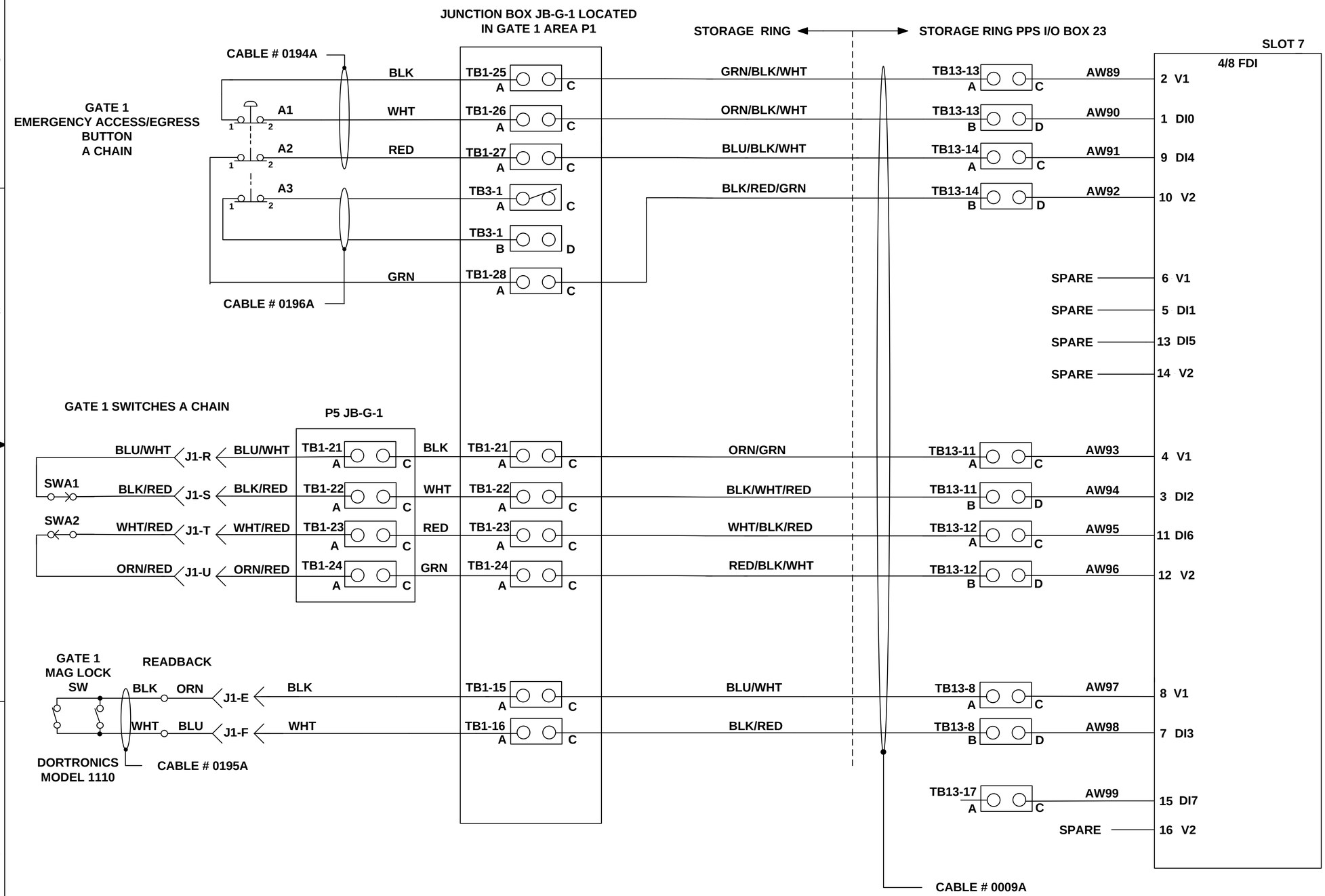

GATE / LABYRINTH GROUP

A

GATE 1

HIGHEST WIRE REF DES	AW99
UNUSED WIRE REF DES	AW100-AW104
WIRE REF DES NOT USED	————

LT-EL-SR-EI-PPS-0223-90

LT-EL-SR-EI (DRAWING DIRECTORY)	LT-EL-SR-EI-PPS-0223-90 (DRAWING NUMBER)	M (REV)
COMPUTER REPRODUCIBLE	SCALE: N/A	SHEET 6 OF 63

REV	DESCRIPTION	BY	DATE	CHK	APP
	SEE SHEET 1				

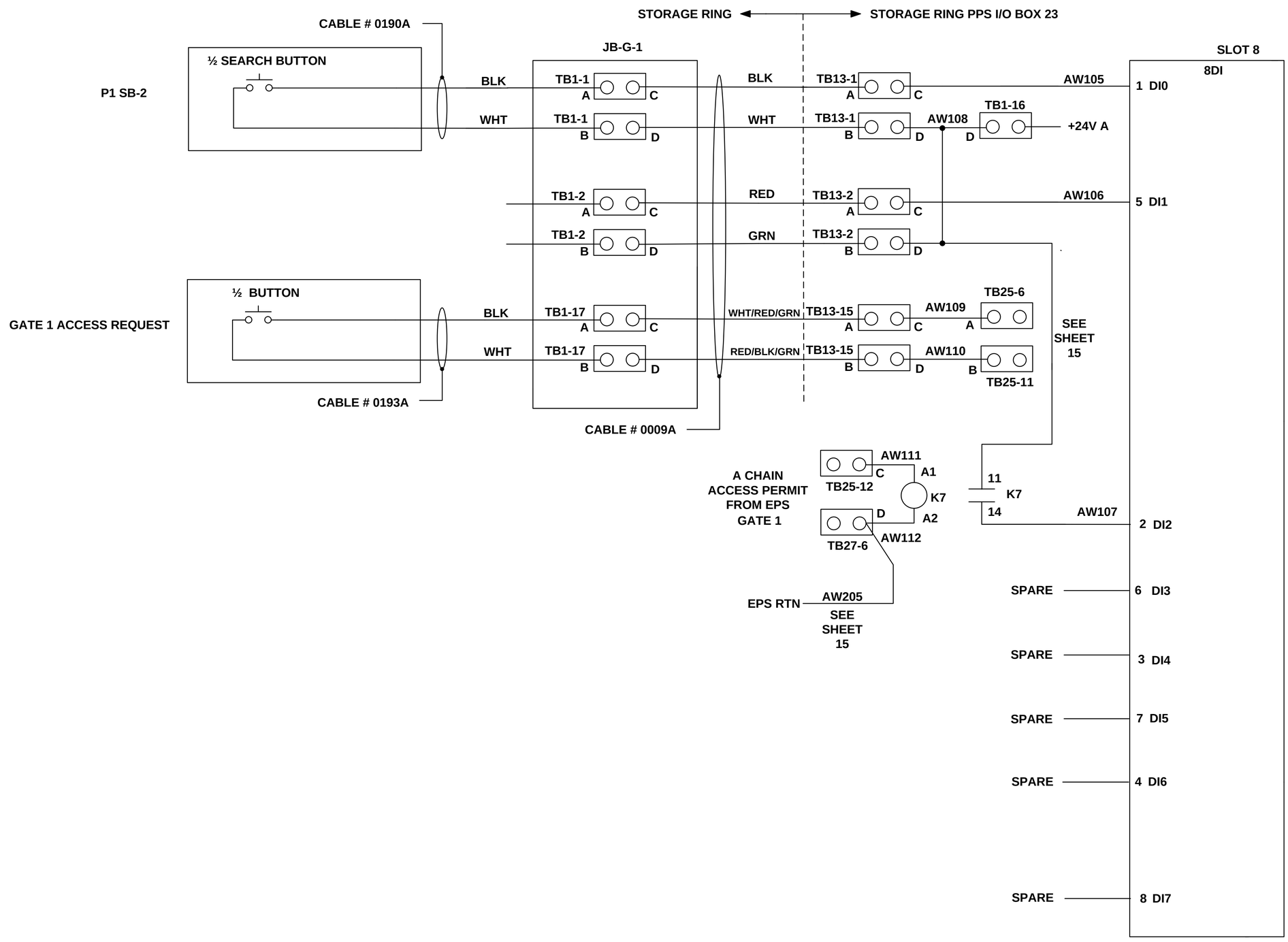

GATE / LABYRINTH GROUP

A

GATE 1

HIGHEST WIRE REF DES	AW205
UNUSED WIRE REF DES	———
WIRE REF DES NOT USED	———

LT-EL-SR-EI-PPS-0223-90

LT-EL-SR-EI (DRAWING DIRECTORY)	LT-EL-SR-EI-PPS-0223-90 (DRAWING NUMBER)	M (REV)
COMPUTER REPRODUCIBLE	SCALE: N/A	SHEET 7 OF 63

REV	DESCRIPTION	BY	DATE	CHK	APP
	SEE SHEET 1				

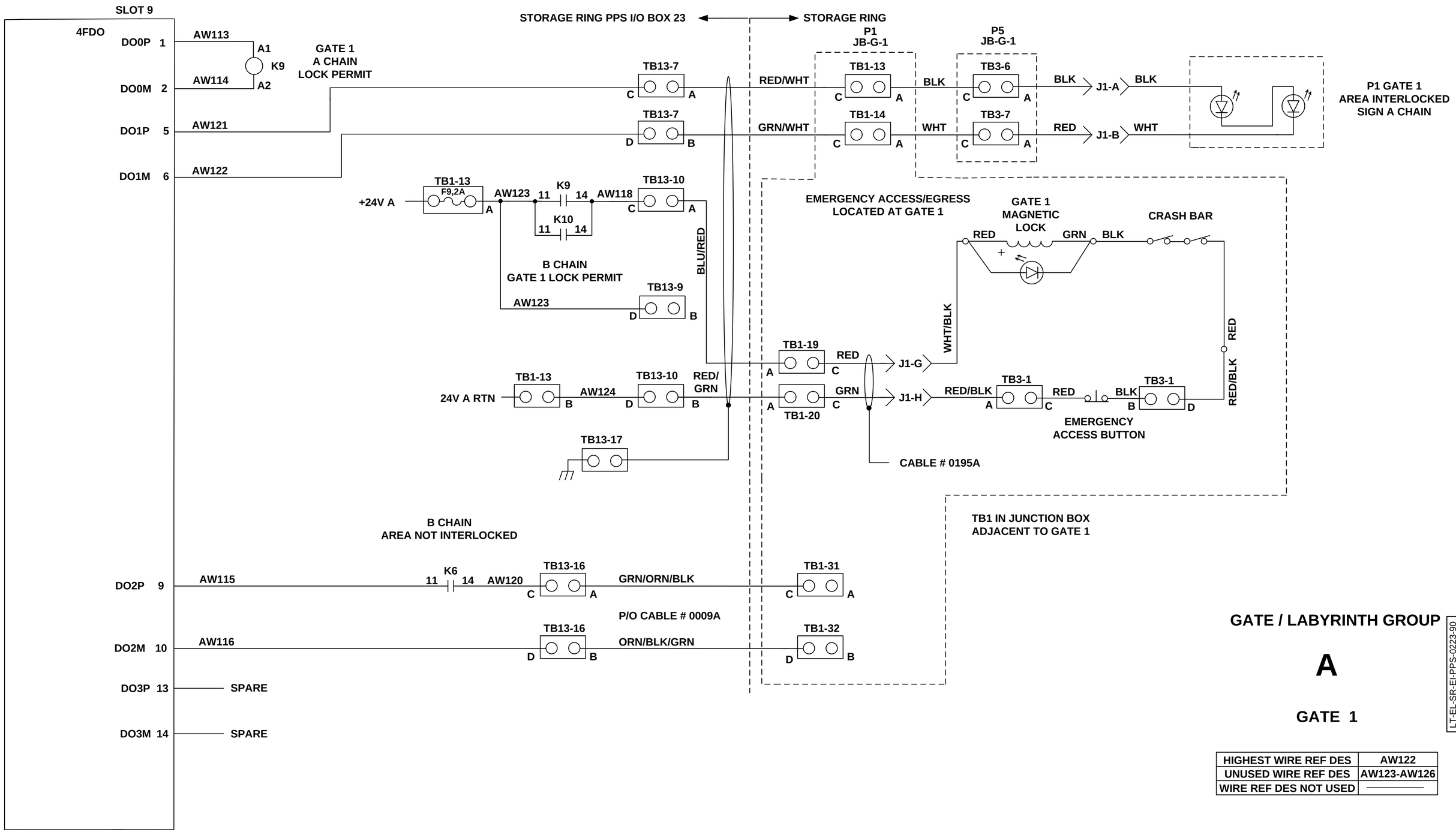

GATE / LABYRINTH GROUP

A

GATE 1

HIGHEST WIRE REF DES	AW122
UNUSED WIRE REF DES	AW123-AW126
WIRE REF DES NOT USED	————

LT-EL-SR-EI-PPS-0223-90

LT-EL-SR-EI (DRAWING DIRECTORY)	LT-EL-SR-EI-PPS-0223-90 (DRAWING NUMBER)	M (REV)
COMPUTER REPRODUCIBLE	SCALE: N/A	SHEET 8 OF 63

REV	DESCRIPTION	BY	DATE	CHK	APP
	SEE SHEET 1				

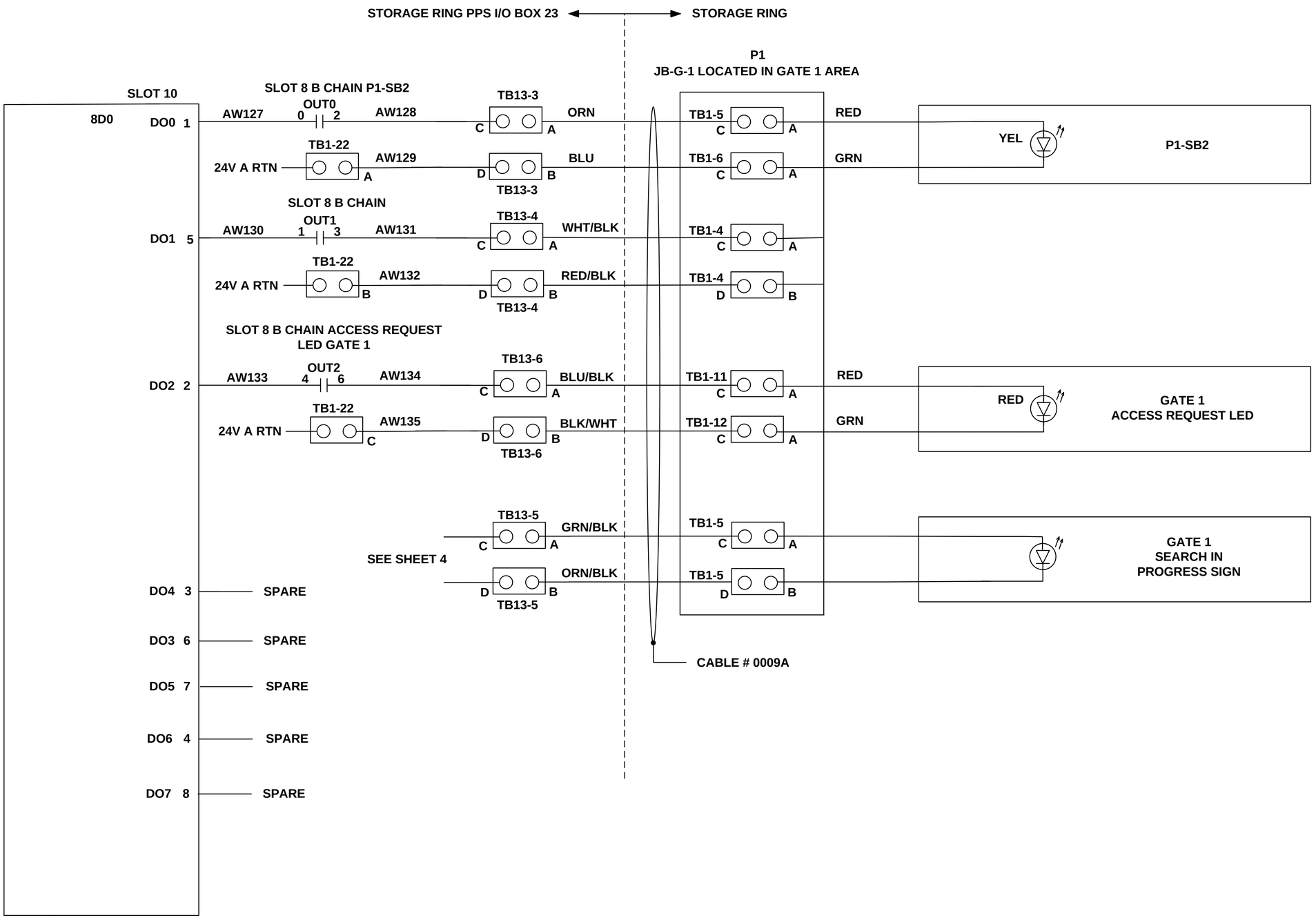

GATE / LABYRINTH GROUP

A

GATE 1

HIGHEST WIRE REF DES	AW135
UNUSED WIRE REF DES	AW139-AW140
WIRE REF DES NOT USED	————

LT-EL-SR-EI-PPS-0223-90

LT-EL-SR-EI (DRAWING DIRECTORY)	LT-EL-SR-EI-PPS-0223-90 (DRAWING NUMBER)	M (REV)
COMPUTER REPRODUCIBLE	SCALE: N/A	SHEET 9 OF 63

REV	DESCRIPTION	BY	DATE	CHK	APP
	SEE SHEET 1				

LT-EL-SR-EI-PPS-0223-90

SHEET LEFT BLANK
FOR FUTURE DATA

LT-EL-SR-EI	LT-EL-SR-EI-PPS-0223-90	M
DRAWING DIRECTORY	DRAWING NUMBER	REV
COMPUTER REPRODUCIBLE	SCALE: N/A	SHEET 10 OF 63

REV	DESCRIPTION	BY	DATE	CHK	APP
	SEE SHEET 1				

LT-EL-SR-EI-PPS-0223-90

SHEET LEFT BLANK
FOR FUTURE DATA

LT-EL-SR-EI	LT-EL-SR-EI-PPS-0223-90	M
DRAWING DIRECTORY	DRAWING NUMBER	REV
COMPUTER REPRODUCIBLE	SCALE: N/A	SHEET 11 OF 63

REV	DESCRIPTION	BY	DATE	CHK	APP
	SEE SHEET 1				

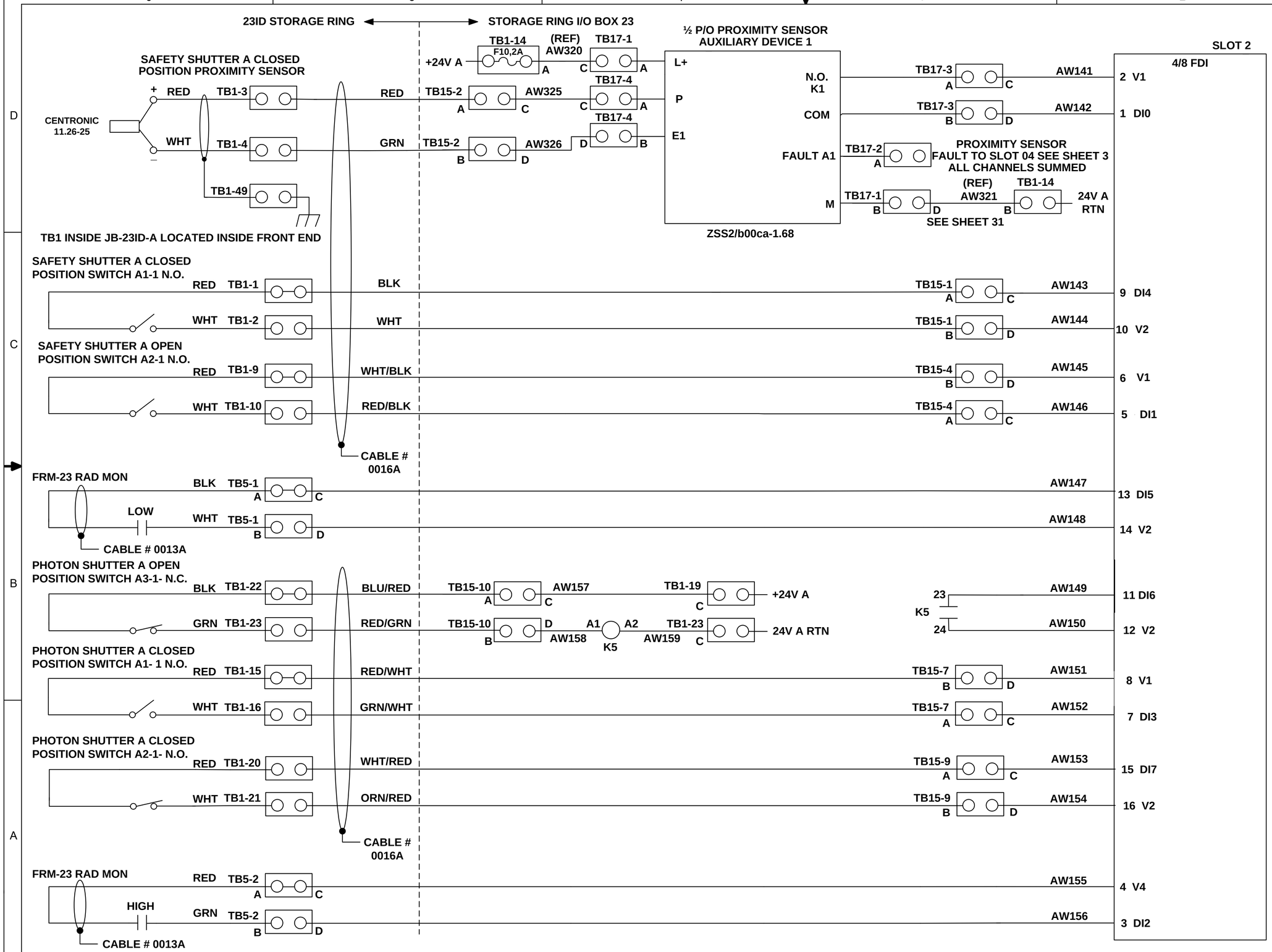

ID BEAMLINE GROUP

A

23ID

HIGHEST WIRE REF DES	AW159
UNUSED WIRE REF DES	AW160
WIRE REF DES NOT USED	————

LT-EL-SR-EI-PPS-0223-90

LT-EL-SR-EI (DRAWING DIRECTORY)	LT-EL-SR-EI-PPS-0223-90 (DRAWING NUMBER)	M (REV)
COMPUTER REPRODUCIBLE	SCALE: N/A	SHEET 12 OF 63

REV	DESCRIPTION	BY	DATE	CHK	APP
	SEE SHEET 1				

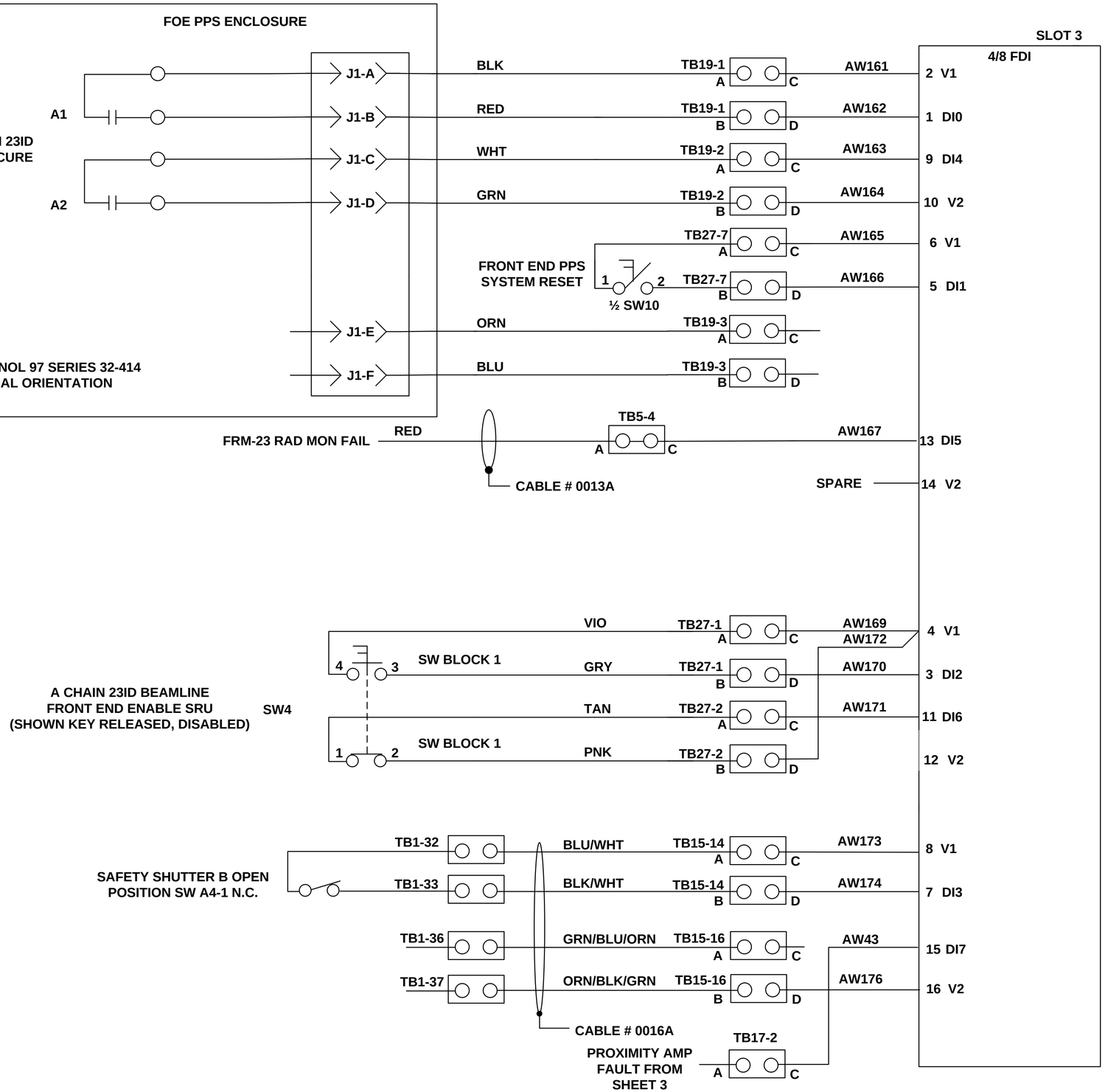

ID BEAMLINE GROUP

A

23ID

HIGHEST WIRE REF DES	AW176
UNUSED WIRE REF DES	AW177-AW180
WIRE REF DES NOT USED	————

LT-EL-SR-EI-PPS-0223-90

LT-EL-SR-EI (DRAWING DIRECTORY)	LT-EL-SR-EI-PPS-0223-90 (DRAWING NUMBER)	M (REV)
COMPUTER REPRODUCIBLE	SCALE: N/A	SHEET 13 OF 63

REV	DESCRIPTION	BY	DATE	CHK	APP
	SEE SHEET 1				

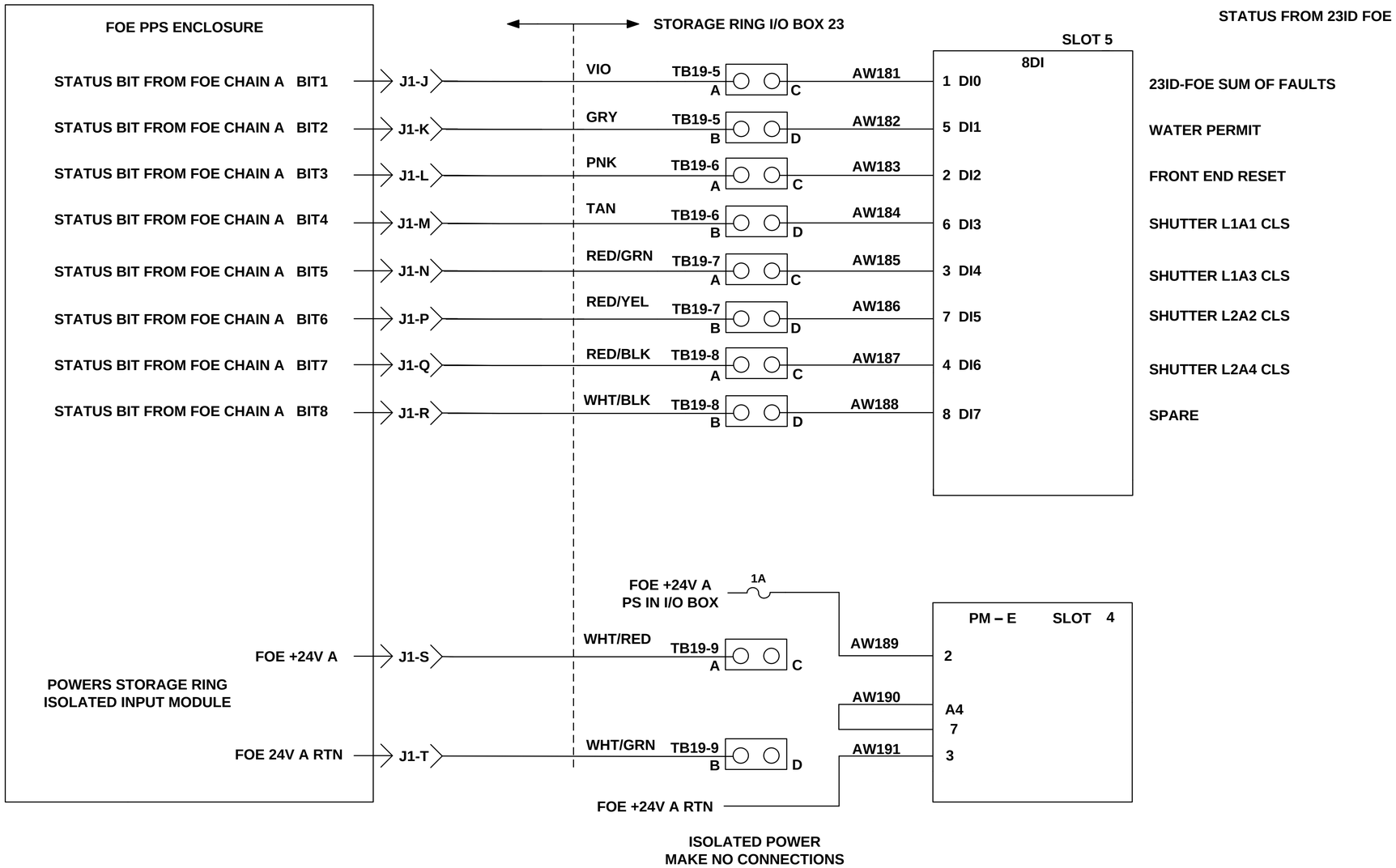

ID BEAMLINE GROUP

A

23ID

HIGHEST WIRE REF DES	AW191
UNUSED WIRE REF DES	AW192-AW195
WIRE REF DES NOT USED	————

LT-EL-SR-EI-PPS-0223-90

LT-EL-SR-EI (DRAWING DIRECTORY)	LT-EL-SR-EI-PPS-0223-90 (DRAWING NUMBER)	M (REV)
COMPUTER REPRODUCIBLE	SCALE: N/A	SHEET 14 OF 63

REV	DESCRIPTION	BY	DATE	CHK	APP
	SEE SHEET 1				

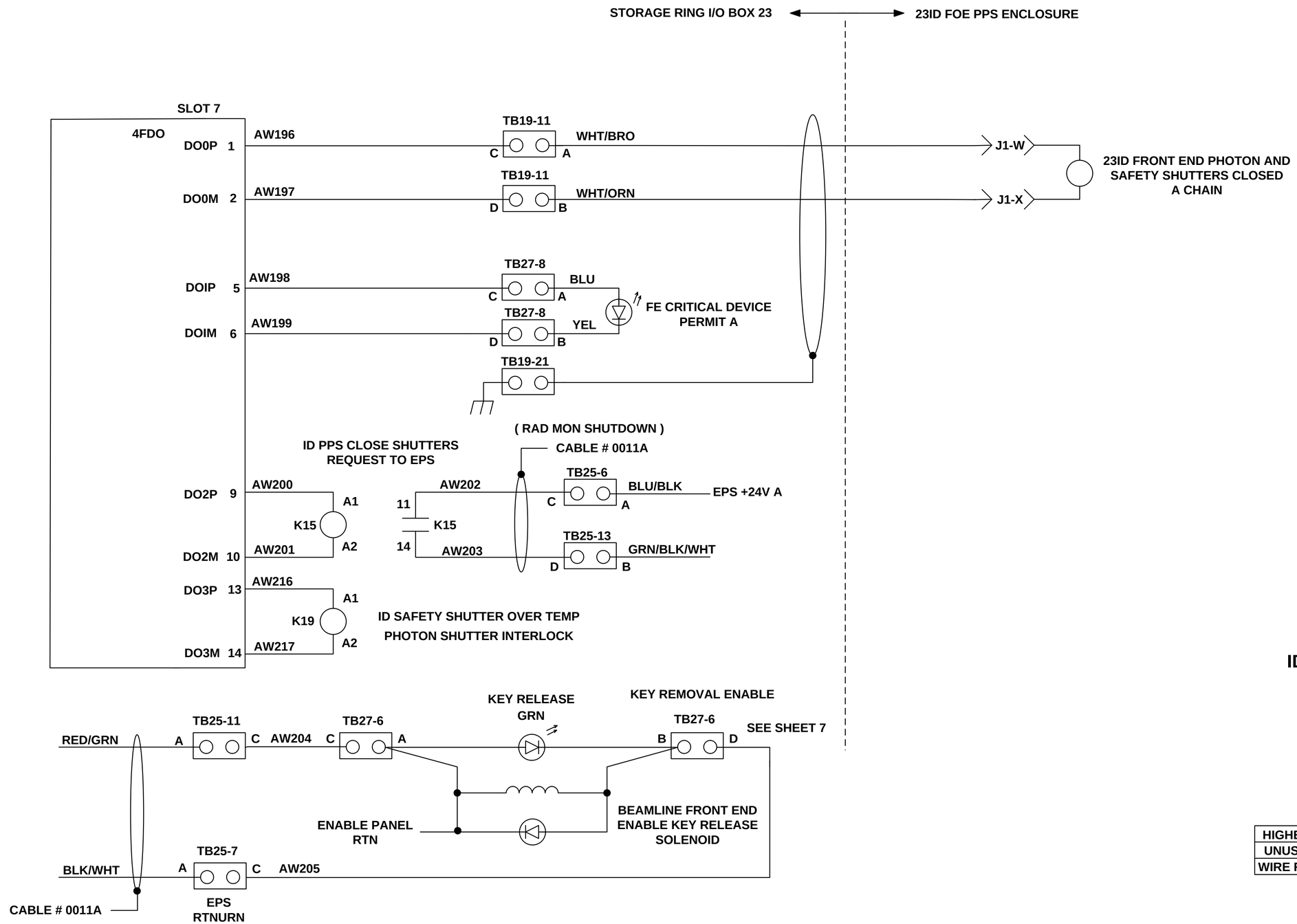

ID BEAMLINE GROUP

A

23ID

HIGHEST WIRE REF DES	AW205
UNUSED WIRE REF DES	———
WIRE REF DES NOT USED	———

LT-EL-SR-EI-PPS-0223-90

LT-EL-SR-EI (DRAWING DIRECTORY)	LT-EL-SR-EI-PPS-0223-90 (DRAWING NUMBER)	M (REV)
COMPUTER REPRODUCIBLE	SCALE: N/A	SHEET 15 OF 63

REV	DESCRIPTION	BY	DATE	CHK	APP
	SEE SHEET 1				

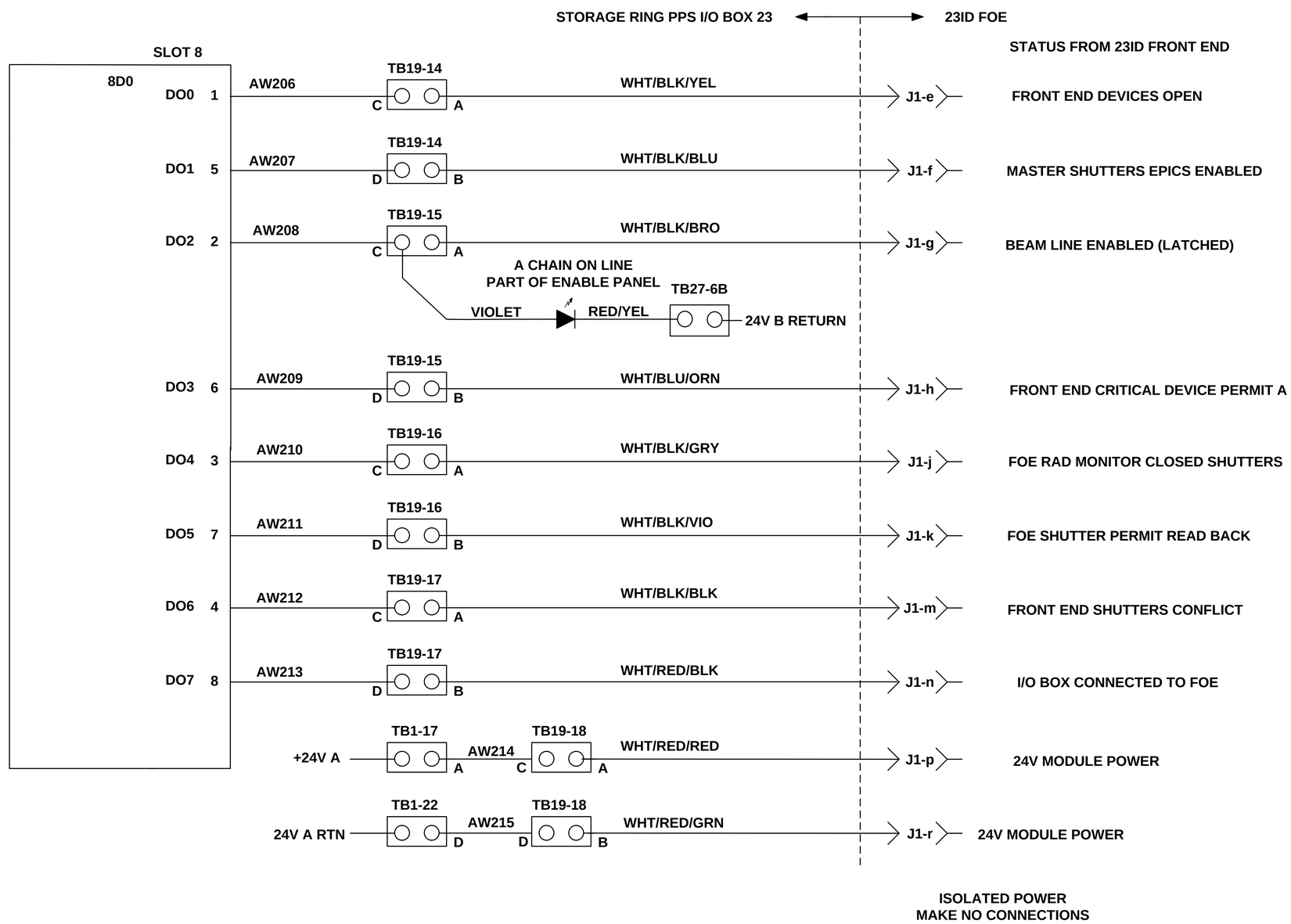

ID BEAMLINE GROUP

A

23ID

LT-EL-SR-EI-PPS-0223-90

HIGHEST WIRE REF DES	AW215
UNUSED WIRE REF DES	AW218
WIRE REF DES NOT USED	———

LT-EL-SR-EI (DRAWING DIRECTORY)	LT-EL-SR-EI-PPS-0223-90 (DRAWING NUMBER)	M (REV)
COMPUTER REPRODUCIBLE	SCALE: N/A	SHEET 16 OF 63

REV	DESCRIPTION	BY	DATE	CHK	APP
	SEE SHEET 1				

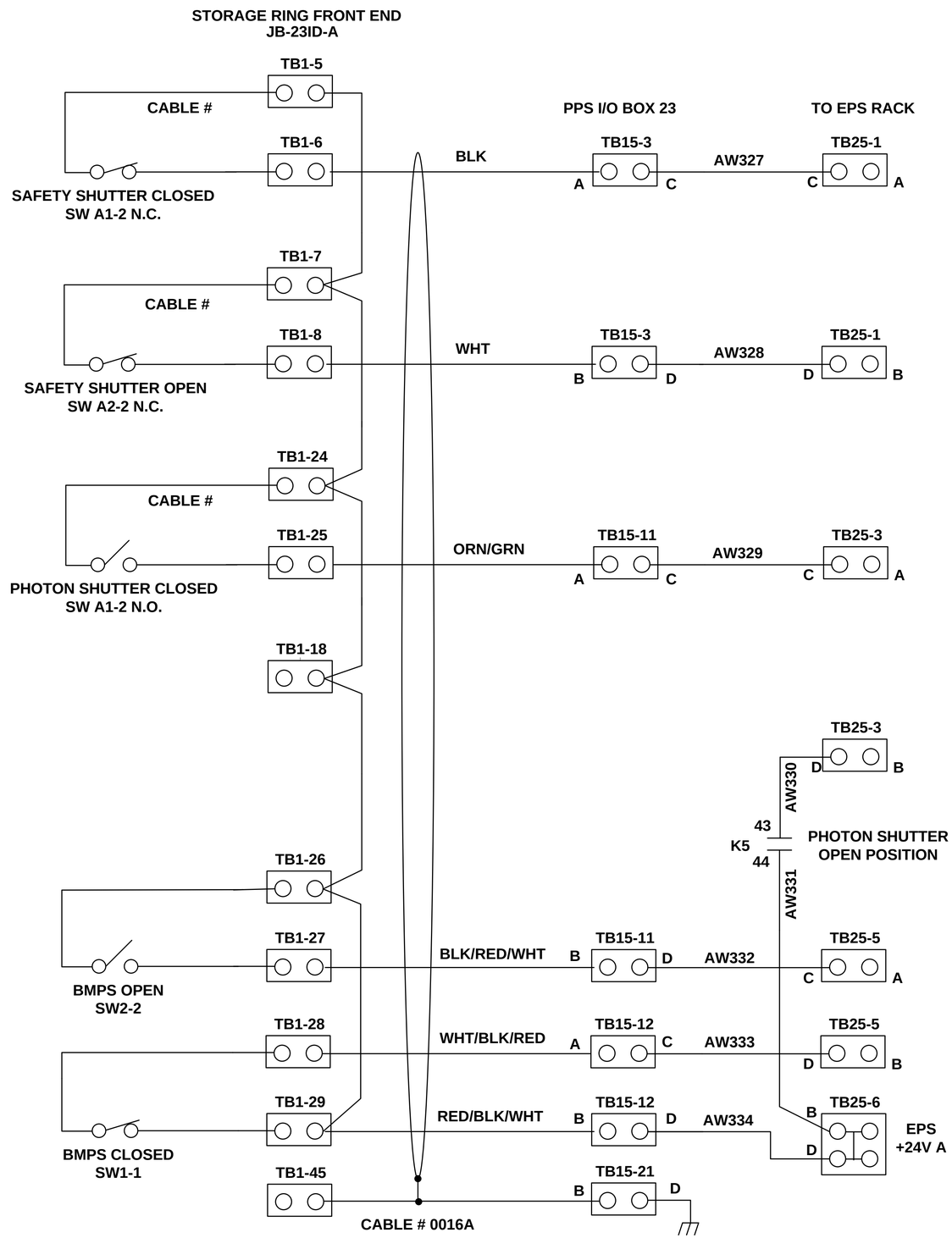

ID BEAMLINE GROUP

A

23ID

HIGHEST WIRE REF DES	AW334
UNUSED WIRE REF DES	———
WIRE REF DES NOT USED	———

LT-EL-SR-EI-PPS-0223-90

LT-EL-SR-EI DRAWING DIRECTORY	LT-EL-SR-EI-PPS-0223-90 DRAWING NUMBER	M REV
COMPUTER REPRODUCIBLE	SCALE: N/A	SHEET 17 OF 63

REV	DESCRIPTION	BY	DATE	CHK	APP
	SEE SHEET 1				

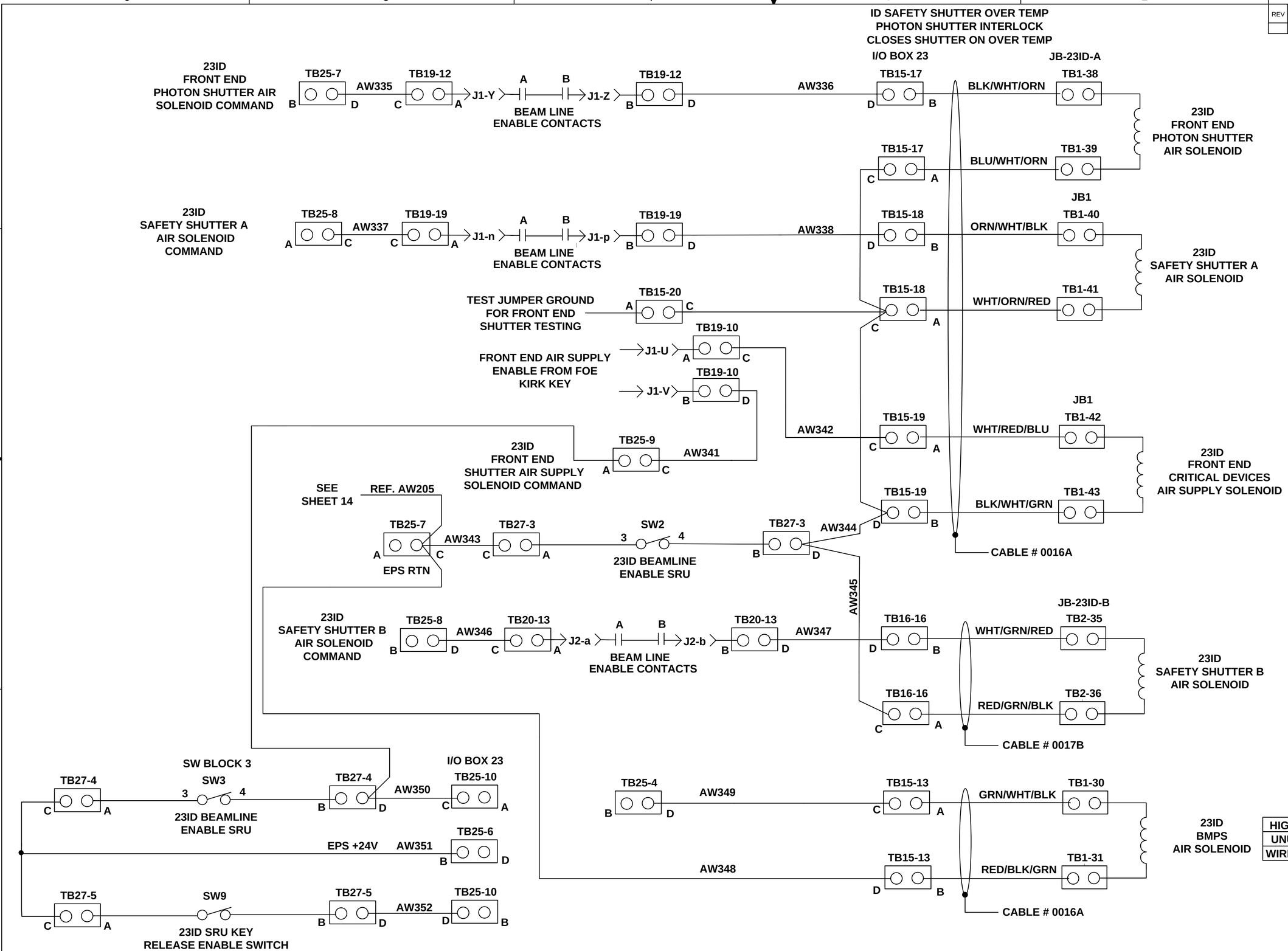

HIGHEST WIRE REF DES	AW352
UNUSED WIRE REF DES	———
WIRE REF DES NOT USED	———

ID BEAMLINE GROUP

A

23ID

LT-EL-SR-EI-PPS-0223-90

LT-EL-SR-EI (DRAWING DIRECTORY)	LT-EL-SR-EI-PPS-0223-90 (DRAWING NUMBER)	M (REV)
COMPUTER REPRODUCIBLE	SCALE: N/A	SHEET 18 OF 63

REV	DESCRIPTION	BY	DATE	CHK	APP
	SEE SHEET 1				

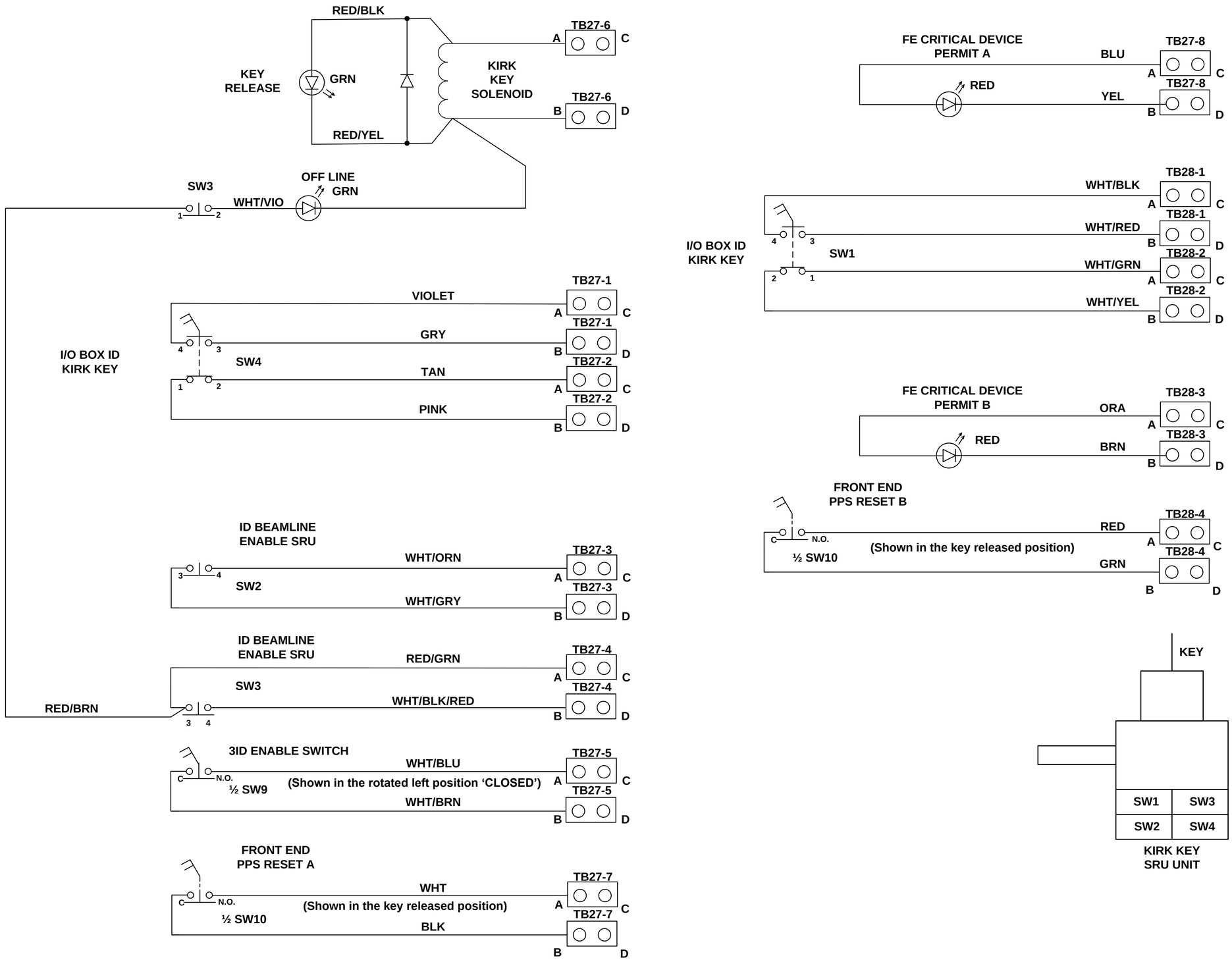

BEAMLINE ENABLE PANEL

LT-EL-SR-EI-PPS-0223-90

LT-EL-SR-EI (DRAWING DIRECTORY)	LT-EL-SR-EI-PPS-0223-90 (DRAWING NUMBER)	M (REV)
COMPUTER REPRODUCIBLE	SCALE: N/A	SHEET 19 OF 63

REV	DESCRIPTION	BY	DATE	CHK	APP
	SEE SHEET 1				

LT-EL-SR-EI-PPS-0223-90

SHEET LEFT BLANK
FOR FUTURE DATA

LT-EL-SR-EI	LT-EL-SR-EI-PPS-0223-90	M
DRAWING DIRECTORY	DRAWING NUMBER	REV
COMPUTER REPRODUCIBLE	SCALE: N/A	SHEET 20 OF 63

REV	DESCRIPTION	BY	DATE	CHK	APP
	SEE SHEET 1				

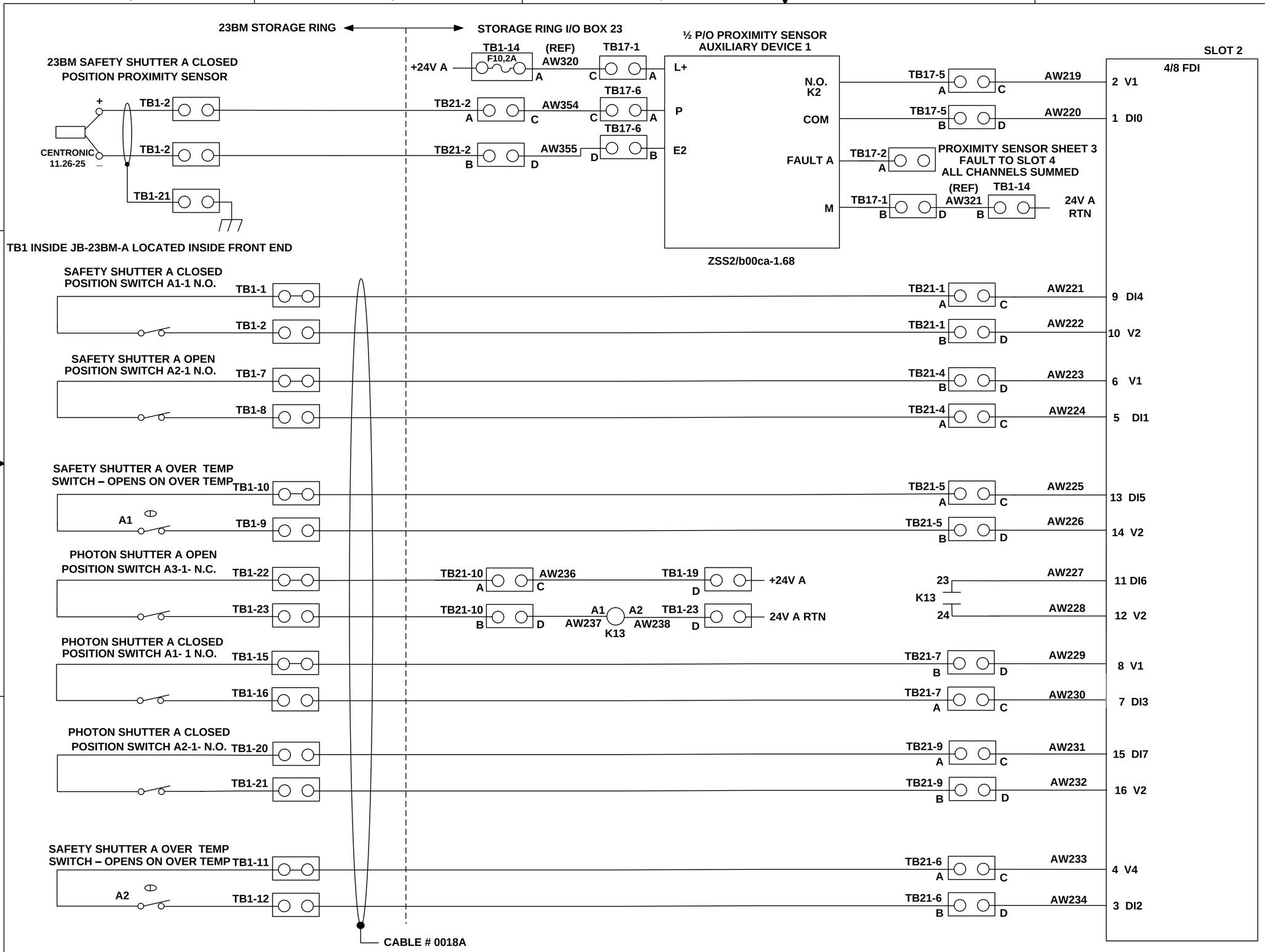

BM BEAMLINE GROUP

A

23BM

HIGHEST WIRE REF DES	AW355
UNUSED WIRE REF DES	———
WIRE REF DES NOT USED	———

LT-EL-SR-EI-PPS-0223-90

LT-EL-SR-EI (DRAWING DIRECTORY)	LT-EL-SR-EI-PPS-0223-90 (DRAWING NUMBER)	M (REV)
COMPUTER REPRODUCIBLE	SCALE: N/A	SHEET 21 OF 63

REV	DESCRIPTION	BY	DATE	CHK	APP
	SEE SHEET 1				

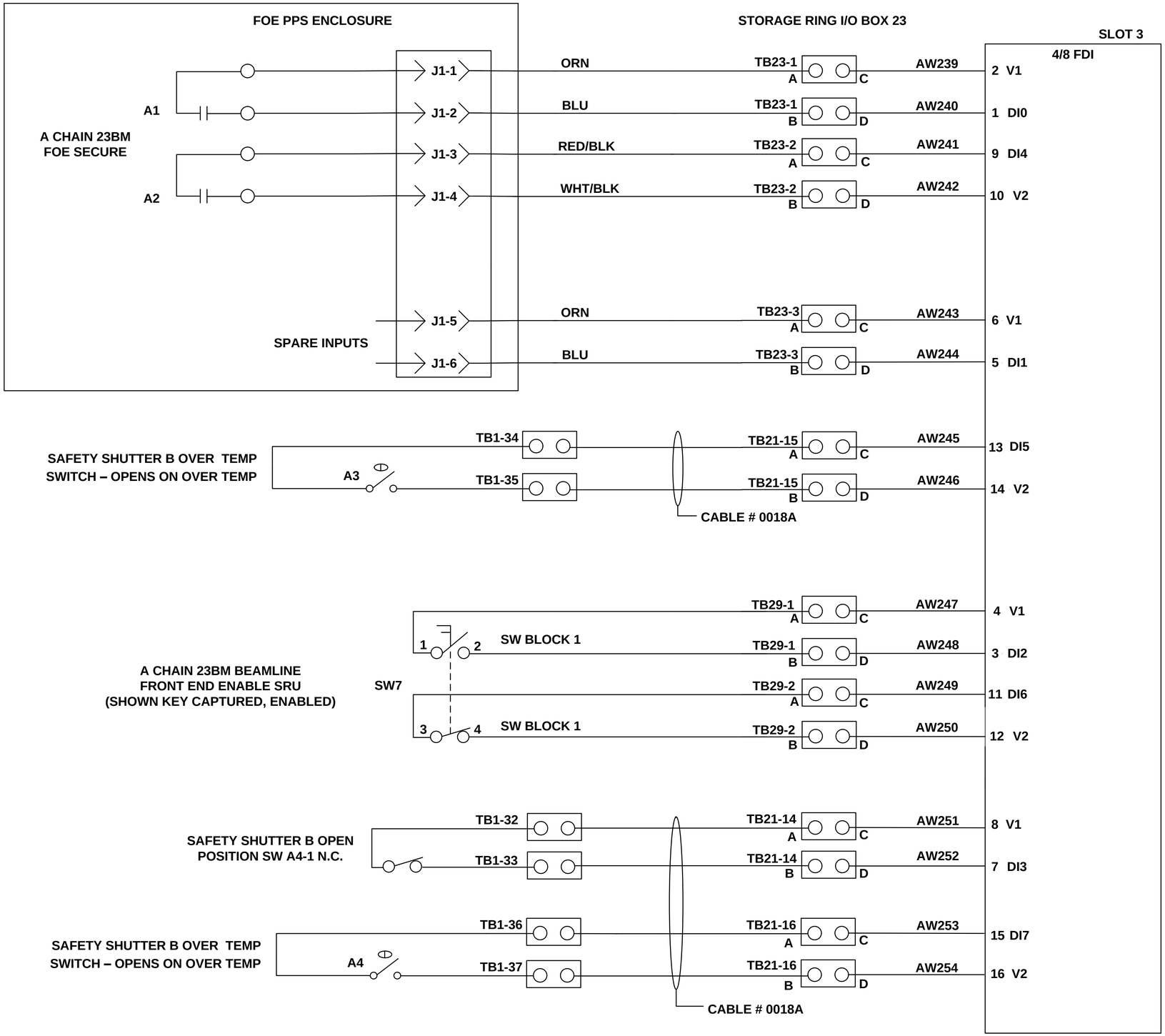

BM BEAMLINE GROUP

A

23BM

HIGHEST WIRE REF DES	AW254
UNUSED WIRE REF DES	AW255-AW258
WIRE REF DES NOT USED	———

LT-EL-SR-EI-PPS-0223-90

LT-EL-SR-EI (DRAWING DIRECTORY)	LT-EL-SR-EI-PPS-0223-90 (DRAWING NUMBER)	M (REV)
COMPUTER REPRODUCIBLE	SCALE: N/A	SHEET 22 OF 63

REV	DESCRIPTION	BY	DATE	CHK	APP
	SEE SHEET 1				

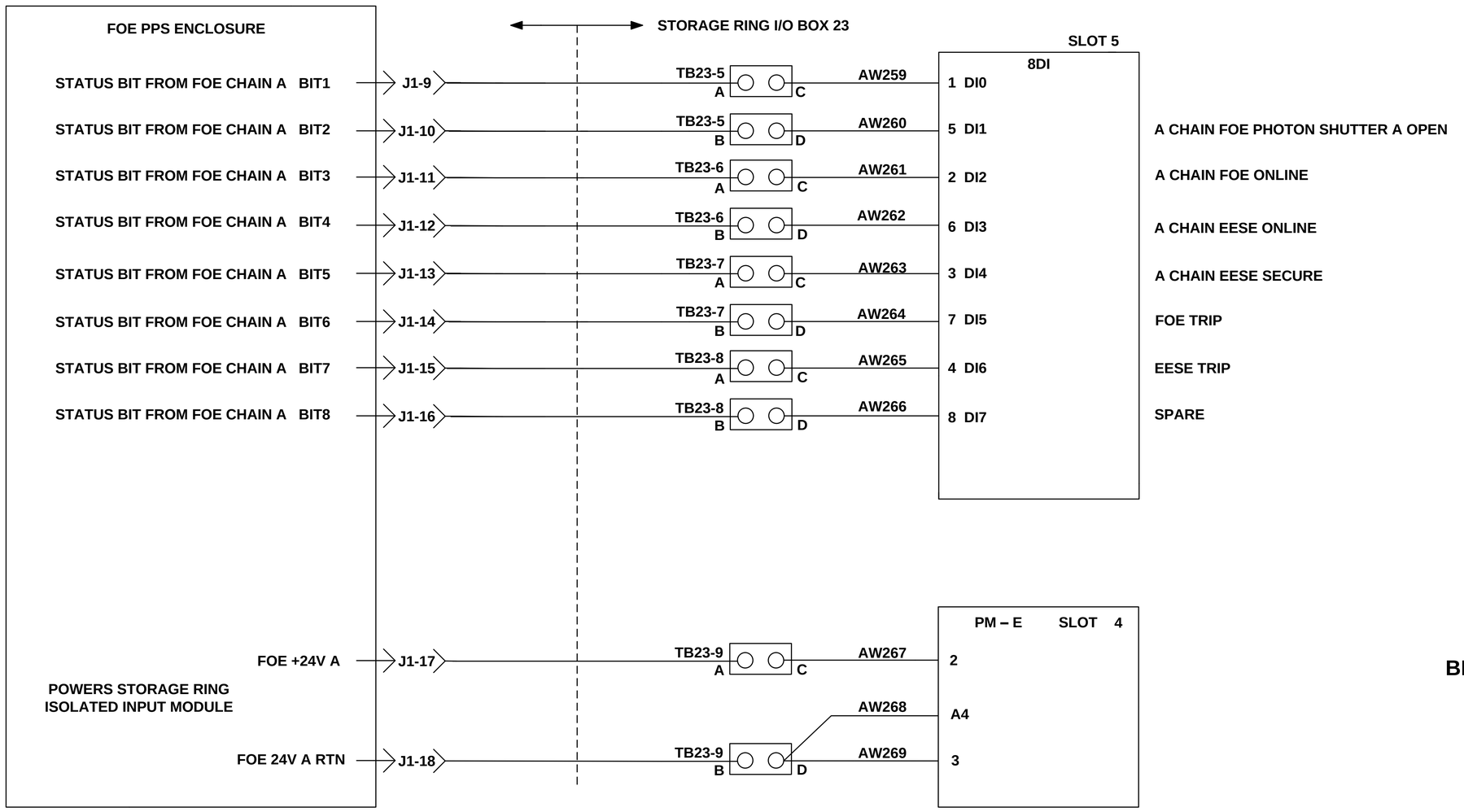

BM BEAMLINE GROUP

A

23BM

HIGHEST WIRE REF DES	AW269
UNUSED WIRE REF DES	AW270-AW273
WIRE REF DES NOT USED	————

LT-EL-SR-EI-PPS-0223-90

LT-EL-SR-EI (DRAWING DIRECTORY)	LT-EL-SR-EI-PPS-0223-90 (DRAWING NUMBER)	M (REV)
COMPUTER REPRODUCIBLE	SCALE: N/A	SHEET 23 OF 63

REV	DESCRIPTION	BY	DATE	CHK	APP
	SEE SHEET 1				

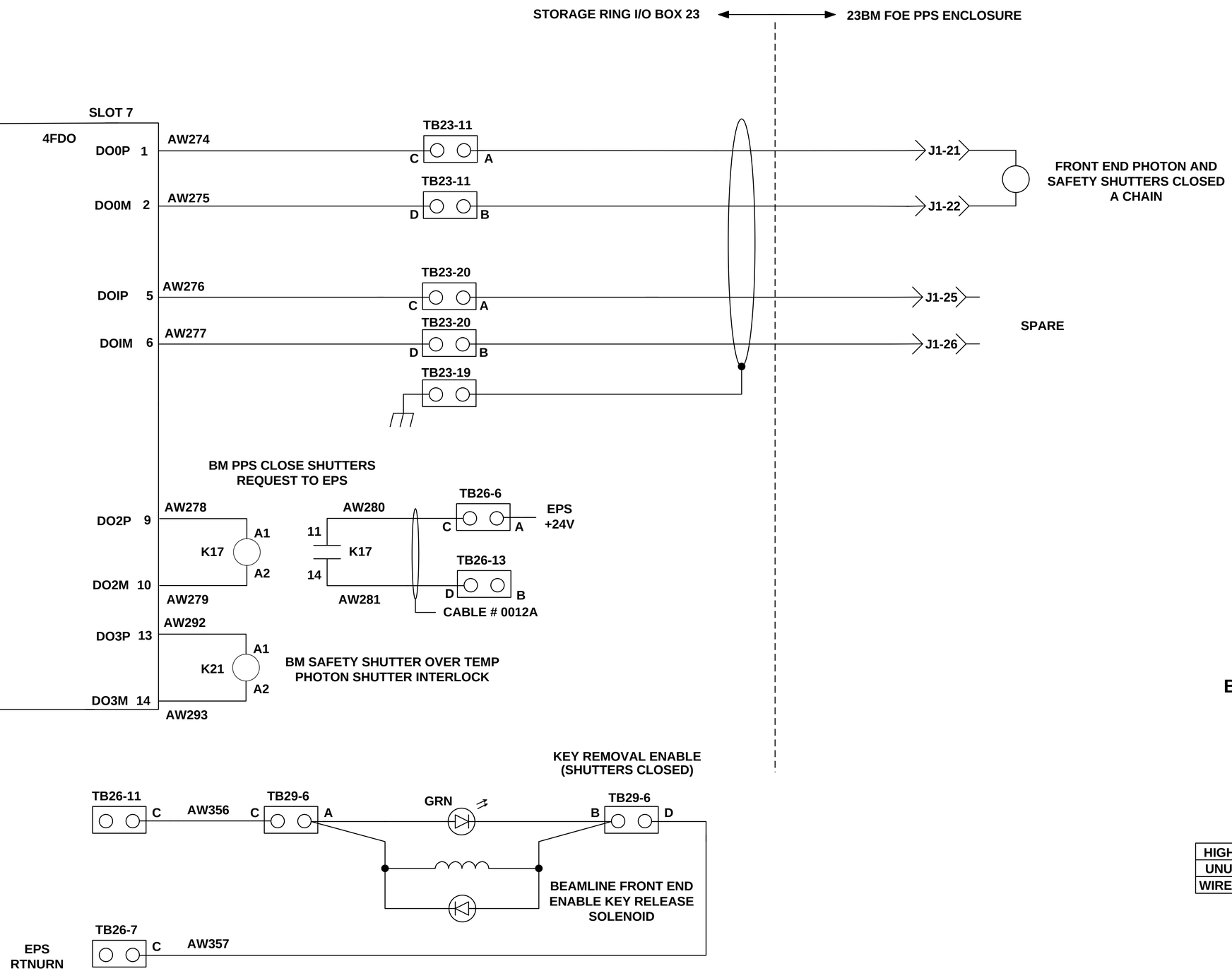

BM BEAMLINE GROUP

A

23BM

HIGHEST WIRE REF DES	AW279
UNUSED WIRE REF DES	———
WIRE REF DES NOT USED	———

LT-EL-SR-EI-PPS-0223-90

LT-EL-SR-EI DRAWING DIRECTORY	LT-EL-SR-EI-PPS-0223-90 DRAWING NUMBER	M REV
COMPUTER REPRODUCIBLE	SCALE: N/A	SHEET 24 OF 63

REV	DESCRIPTION	BY	DATE	CHK	APP
	SEE SHEET 1				

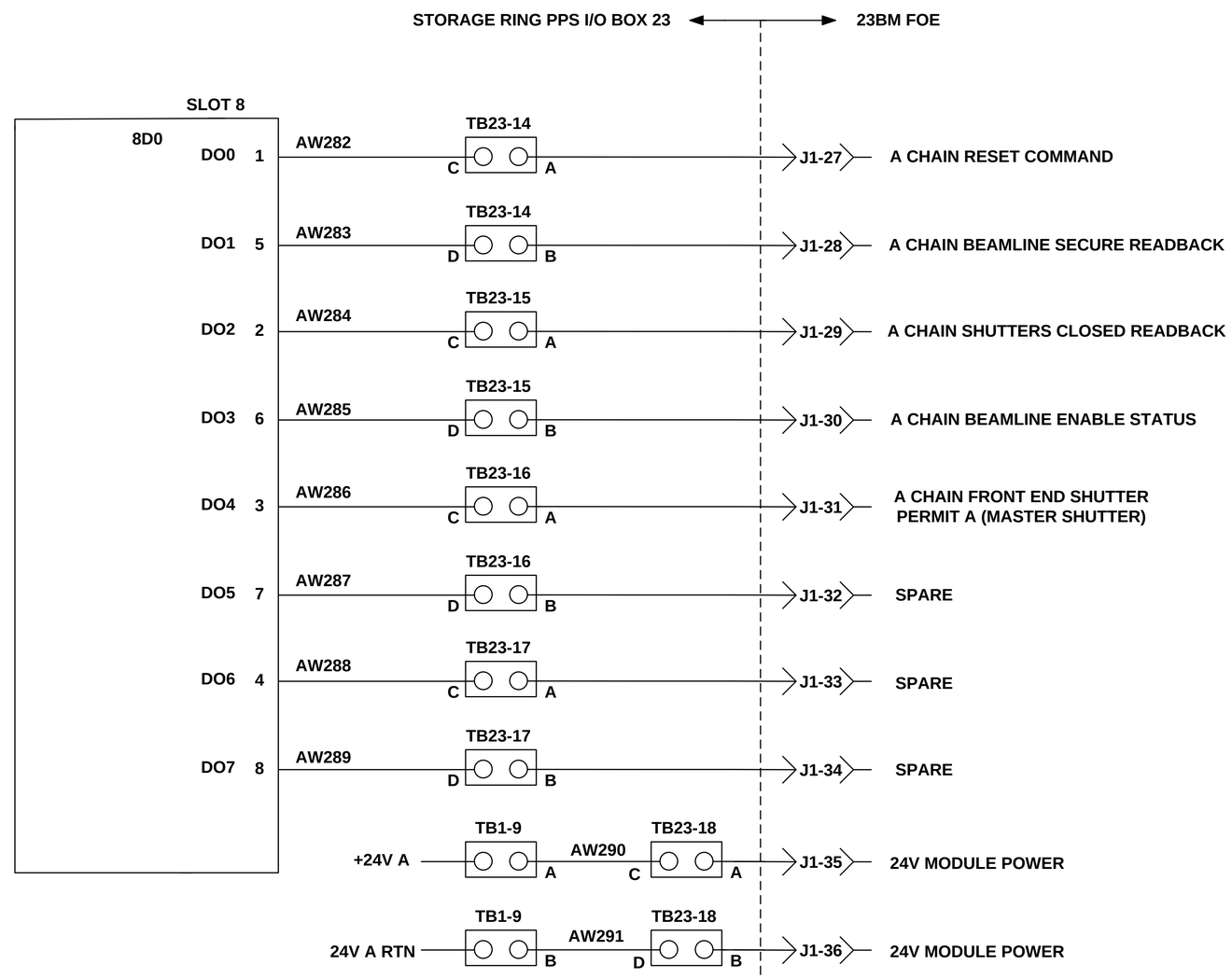

BM BEAMLINE GROUP

A

23BM

LT-EL-SR-EI-PPS-0223-90

HIGHEST WIRE REF DES	AW291
UNUSED WIRE REF DES	———
WIRE REF DES NOT USED	———

LT-EL-SR-EI (DRAWING DIRECTORY)	LT-EL-SR-EI-PPS-0223-90 (DRAWING NUMBER)	M (REV)
COMPUTER REPRODUCIBLE	SCALE: N/A	SHEET 25 OF 63

REV	DESCRIPTION	BY	DATE	CHK	APP
	SEE SHEET 1				

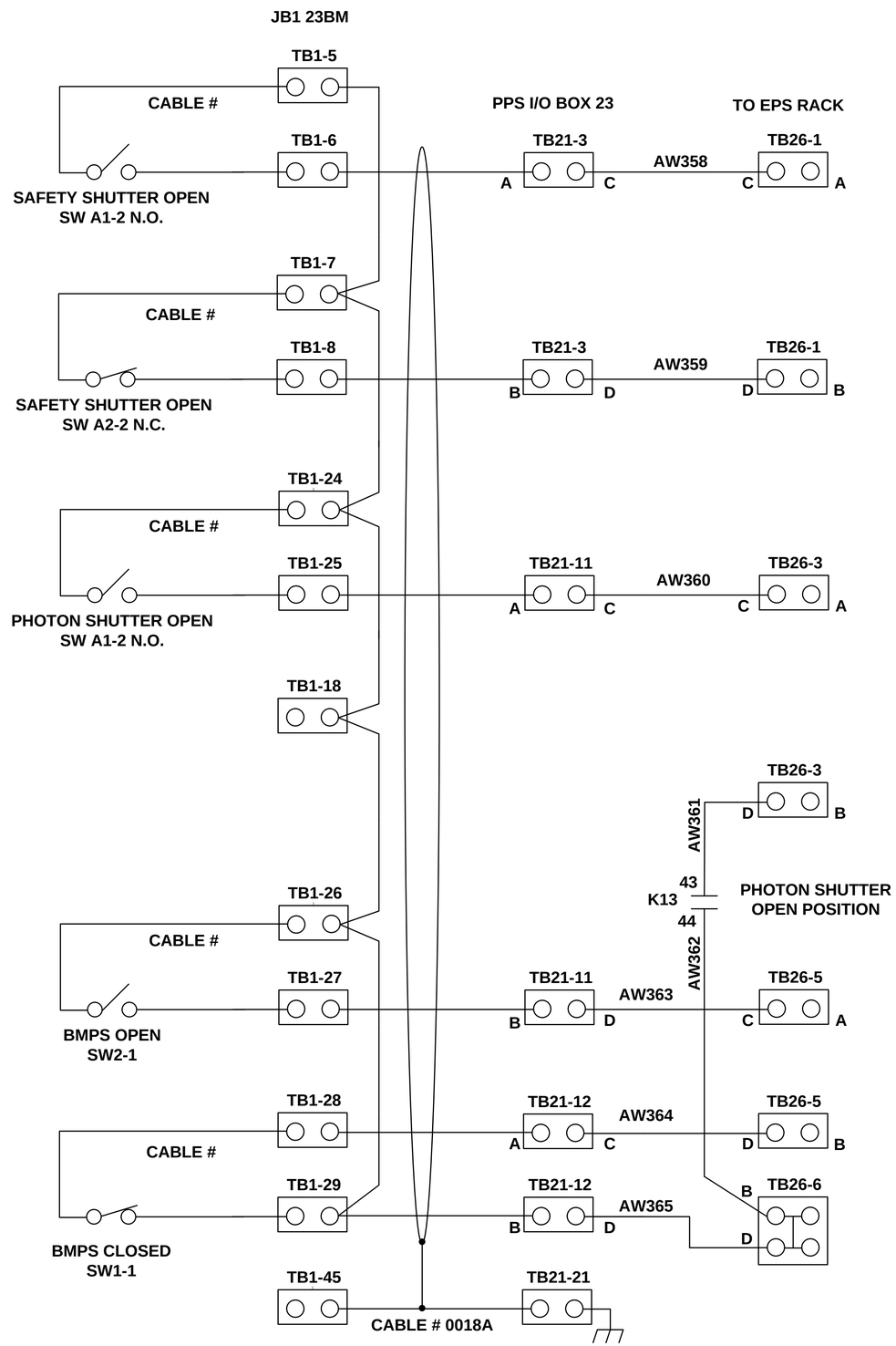

BM BEAMLINE GROUP

A

23BM

HIGHEST WIRE REF DES	AW365
UNUSED WIRE REF DES	———
WIRE REF DES NOT USED	———

LT-EL-SR-EI-PPS-0223-90

LT-EL-SR-EI (DRAWING DIRECTORY)	LT-EL-SR-EI-PPS-0223-90 (DRAWING NUMBER)	M (REV)
COMPUTER REPRODUCIBLE	SCALE: N/A	SHEET 26 OF 63

REV	DESCRIPTION	BY	DATE	CHK	APP
	SEE SHEET 1				

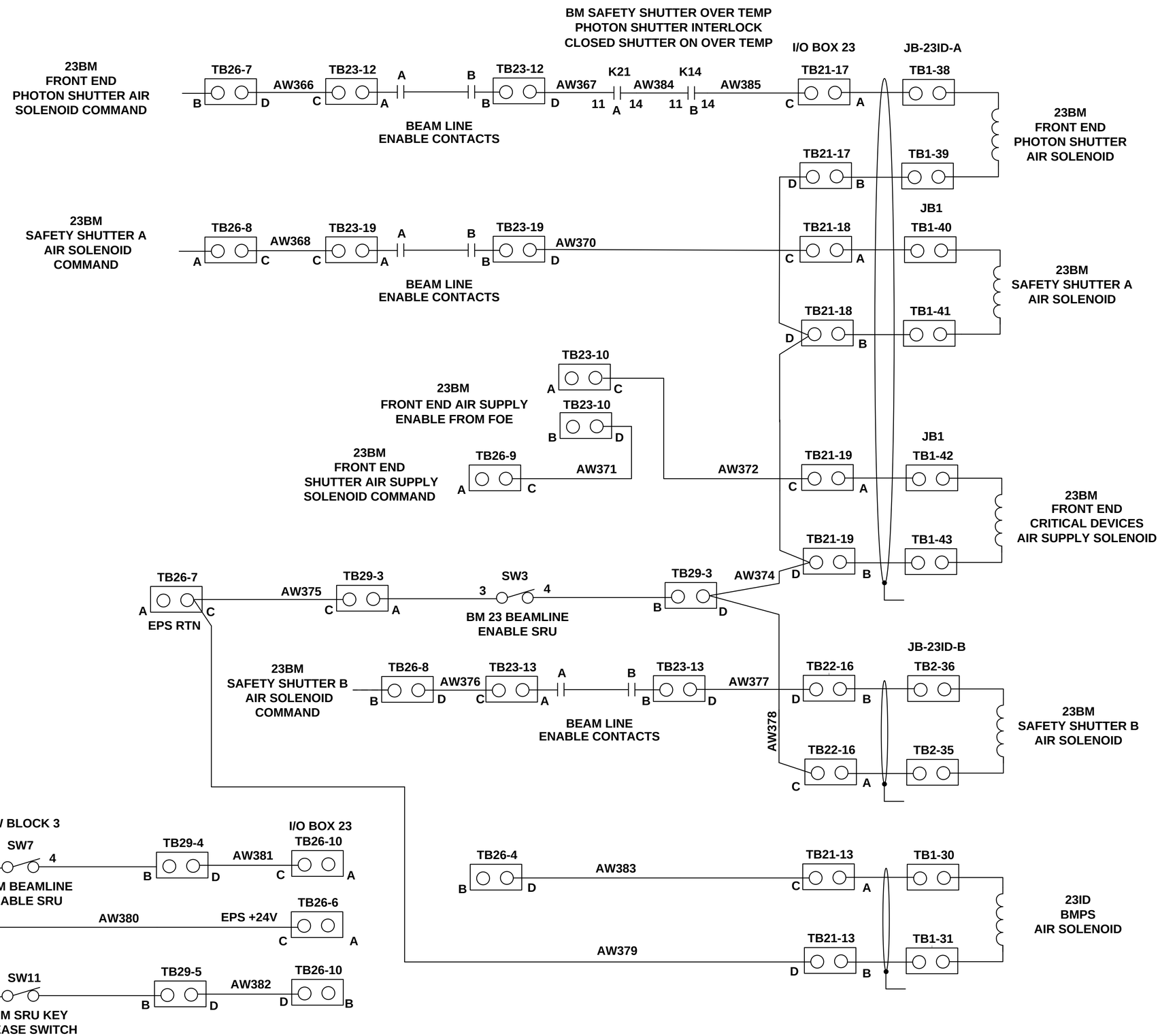

BM BEAMLINE GROUP

A

23BM

HIGHEST WIRE REF DES	AW383
UNUSED WIRE REF DES	———
WIRE REF DES NOT USED	———

LT-EL-SR-EI-PPS-0223-90

LT-EL-SR-EI DRAWING DIRECTORY	LT-EL-SR-EI-PPS-0223-90 H DRAWING NUMBER	M REV
COMPUTER REPRODUCIBLE	SCALE: N/A	SHEET 27 OF 63

REV	DESCRIPTION	BY	DATE	CHK	APP
	SEE SHEET 1				

LT-EL-SR-EI-PPS-0223-90

SHEET LEFT BLANK
FOR FUTURE DATA

LT-EL-SR-EI	LT-EL-SR-EI-PPS-0223-90	M
DRAWING DIRECTORY	DRAWING NUMBER	REV
COMPUTER REPRODUCIBLE	SCALE: N/A	SHEET 28 OF 63

REV	DESCRIPTION	BY	DATE	CHK	APP
	SEE SHEET 1				

LT-EL-SR-EI-PPS-0223-90

SHEET LEFT BLANK
FOR FUTURE DATA

LT-EL-SR-EI	LT-EL-SR-EI-PPS-0223-90	M
DRAWING DIRECTORY	DRAWING NUMBER	REV
COMPUTER REPRODUCIBLE	SCALE: N/A	SHEET 29 OF 63

REV	DESCRIPTION	BY	DATE	CHK	APP
	SEE SHEET 1				

LT-EL-SR-EI-PPS-0223-90

SHEET LEFT BLANK
FOR FUTURE DATA

LT-EL-SR-EI	LT-EL-SR-EI-PPS-0223-90	M
DRAWING DIRECTORY	DRAWING NUMBER	REV
COMPUTER REPRODUCIBLE	SCALE: N/A	SHEET 30 OF 62

REV	DESCRIPTION	BY	DATE	CHK	APP
	SEE SHEET 1				

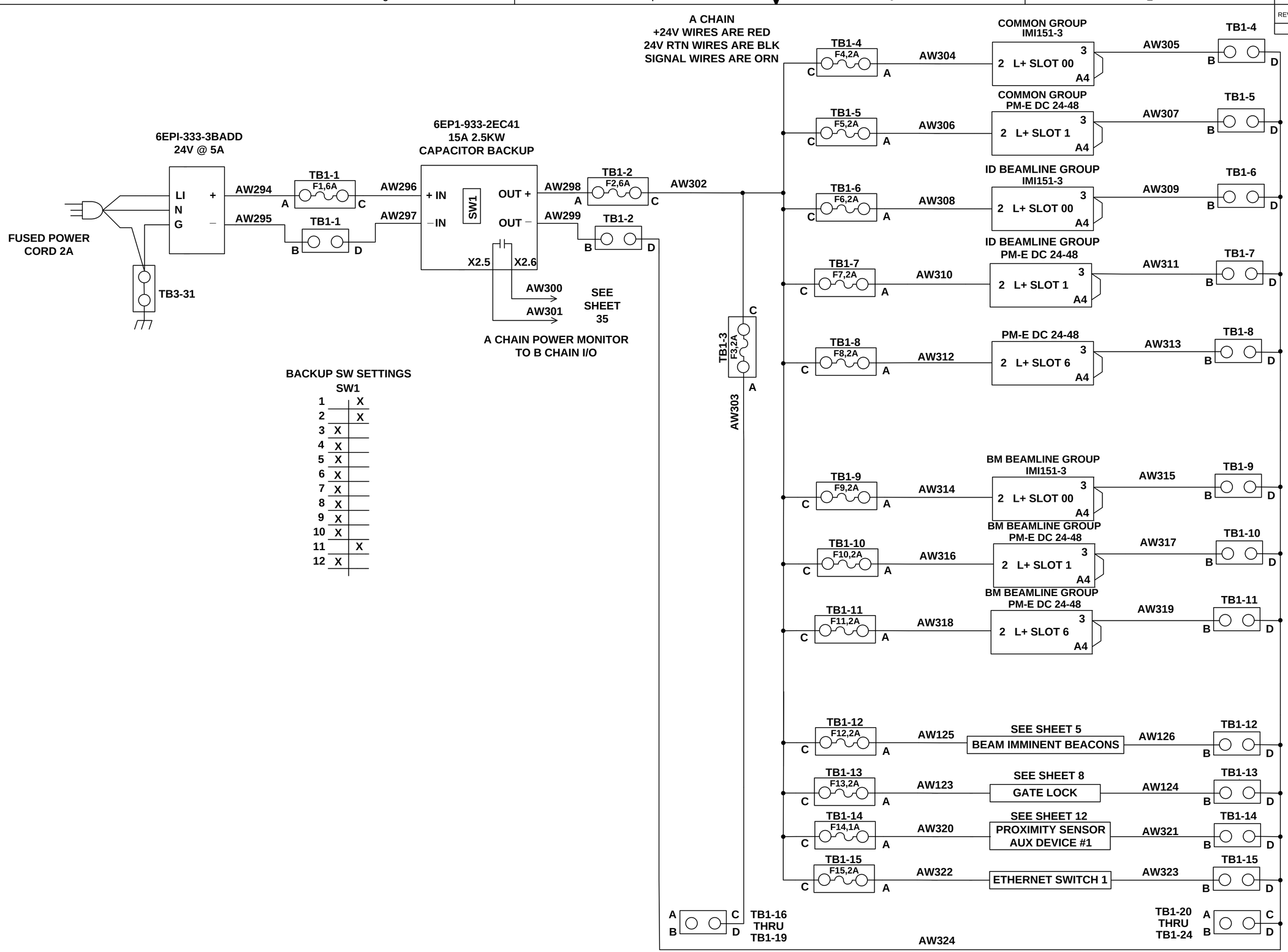

POWER DISTRIBUTION

A

HIGHEST WIRE REF DES IN A CHAIN

LT-EL-SR-EI-PPS-0223-90

LT-EL-SR-EI (DRAWING DIRECTORY)	LT-EL-SR-EI-PPS-0223-90 (DRAWING NUMBER)	M (REV)
COMPUTER REPRODUCIBLE	SCALE: N/A	SHEET 31 OF 63

REV	DESCRIPTION	BY	DATE	CHK	APP
	SEE SHEET 1				

LT-EL-SR-EI-PPS-0223-90

SHEET LEFT BLANK
FOR FUTURE DATA

LT-EL-SR-EI	LT-EL-SR-EI-PPS-0223-90	M
DRAWING DIRECTORY	DRAWING NUMBER	REV
COMPUTER REPRODUCIBLE	SCALE: N/A	SHEET 32 OF 63

REV	DESCRIPTION	BY	DATE	CHK	APP
	SEE SHEET 1				

LT-EL-SR-EI-PPS-0223-90

SHEET LEFT BLANK
FOR FUTURE DATA

LT-EL-SR-EI	LT-EL-SR-EI-PPS-0223-90	M
DRAWING DIRECTORY	DRAWING NUMBER	REV
COMPUTER REPRODUCIBLE	SCALE: N/A	SHEET 33 OF 63

REV	DESCRIPTION	BY	DATE	CHK	APP
	SEE SHEET 1				

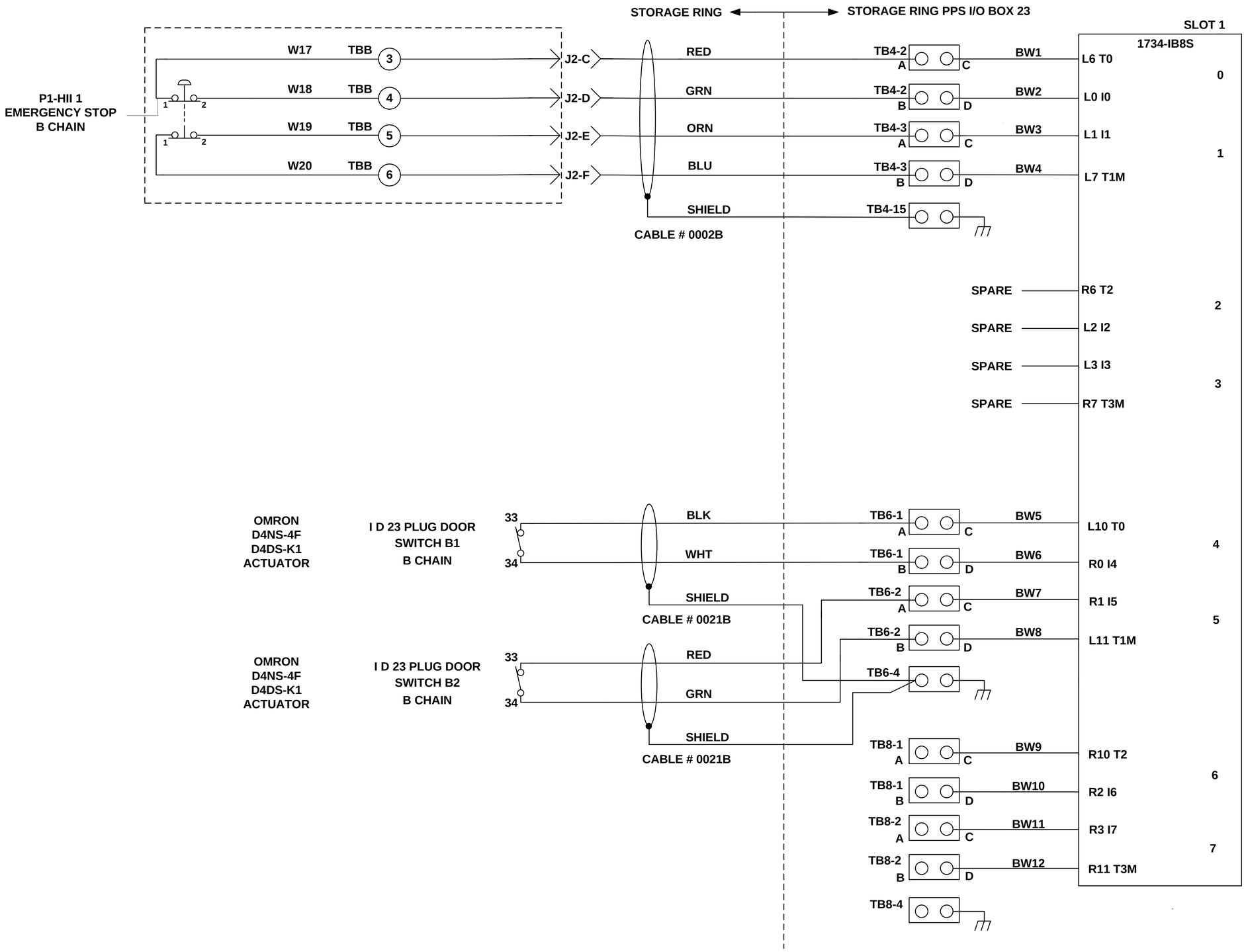

B

COMMON GROUP

HIGHEST WIRE REF DES	BW12
UNUSED WIRE REF DES	BW13-BW16
WIRE REF DES NOT USED	———

LT-EL-SR-EI-PPS-0223-90

LT-EL-SR-EI DRAWING DIRECTORY	LT-EL-SR-EI-PPS-0223-90 DRAWING NUMBER	M REV
COMPUTER REPRODUCIBLE	SCALE: N/A	SHEET 34 OF 63

REV	DESCRIPTION	BY	DATE	CHK	APP
	SEE SHEET 1				

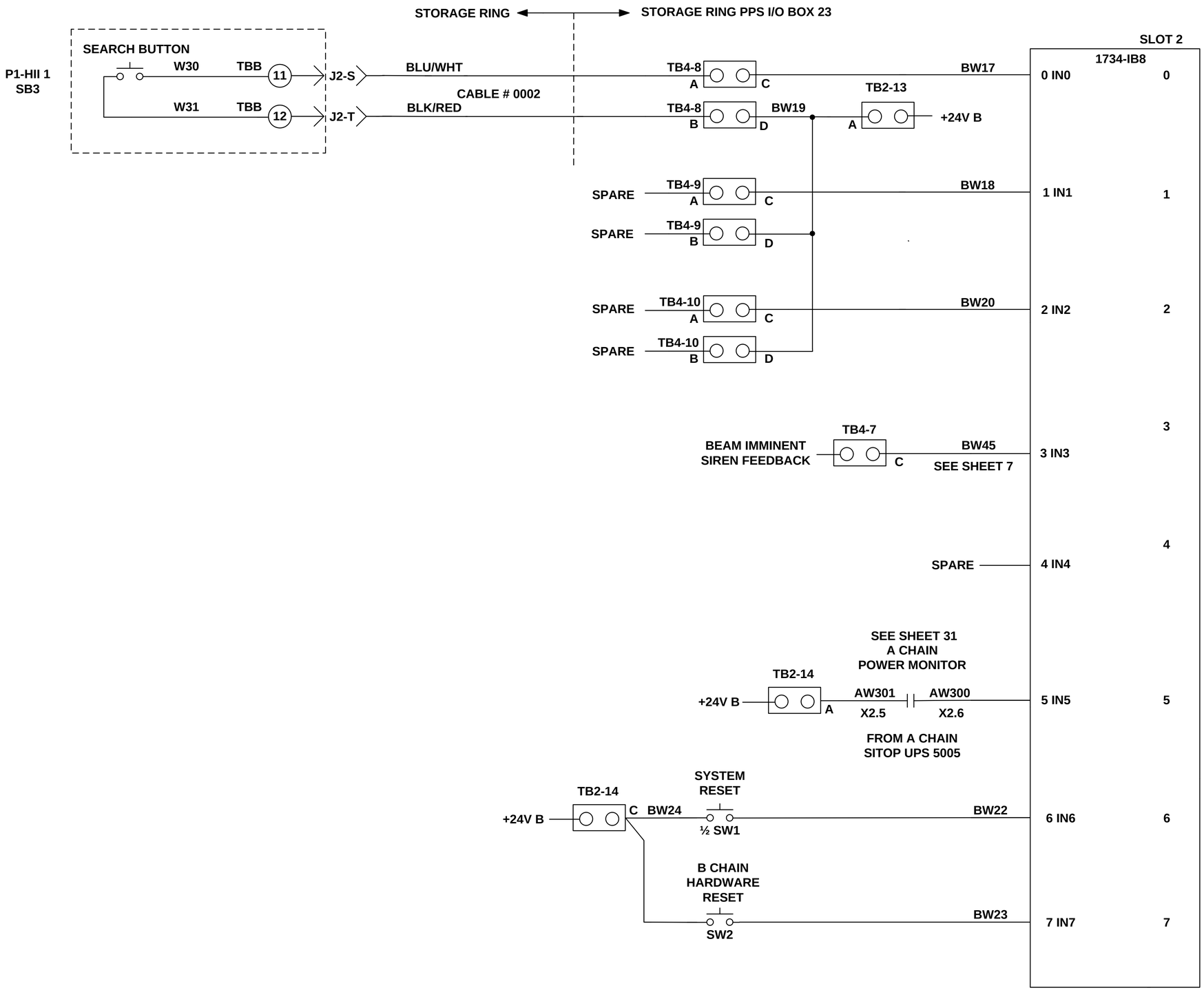

B

COMMON GROUP

HIGHEST WIRE REF DES	BW23
UNUSED WIRE REF DES	———
WIRE REF DES NOT USED	———

LT-EL-SR-EI-PPS-0223-90

LT-EL-SR-EI DRAWING DIRECTORY	LT-EL-SR-EI-PPS-0223-90 DRAWING NUMBER	M REV
COMPUTER REPRODUCIBLE	SCALE: N/A	SHEET 35 OF 63

REV	DESCRIPTION	BY	DATE	CHK	APP
	SEE SHEET 1				

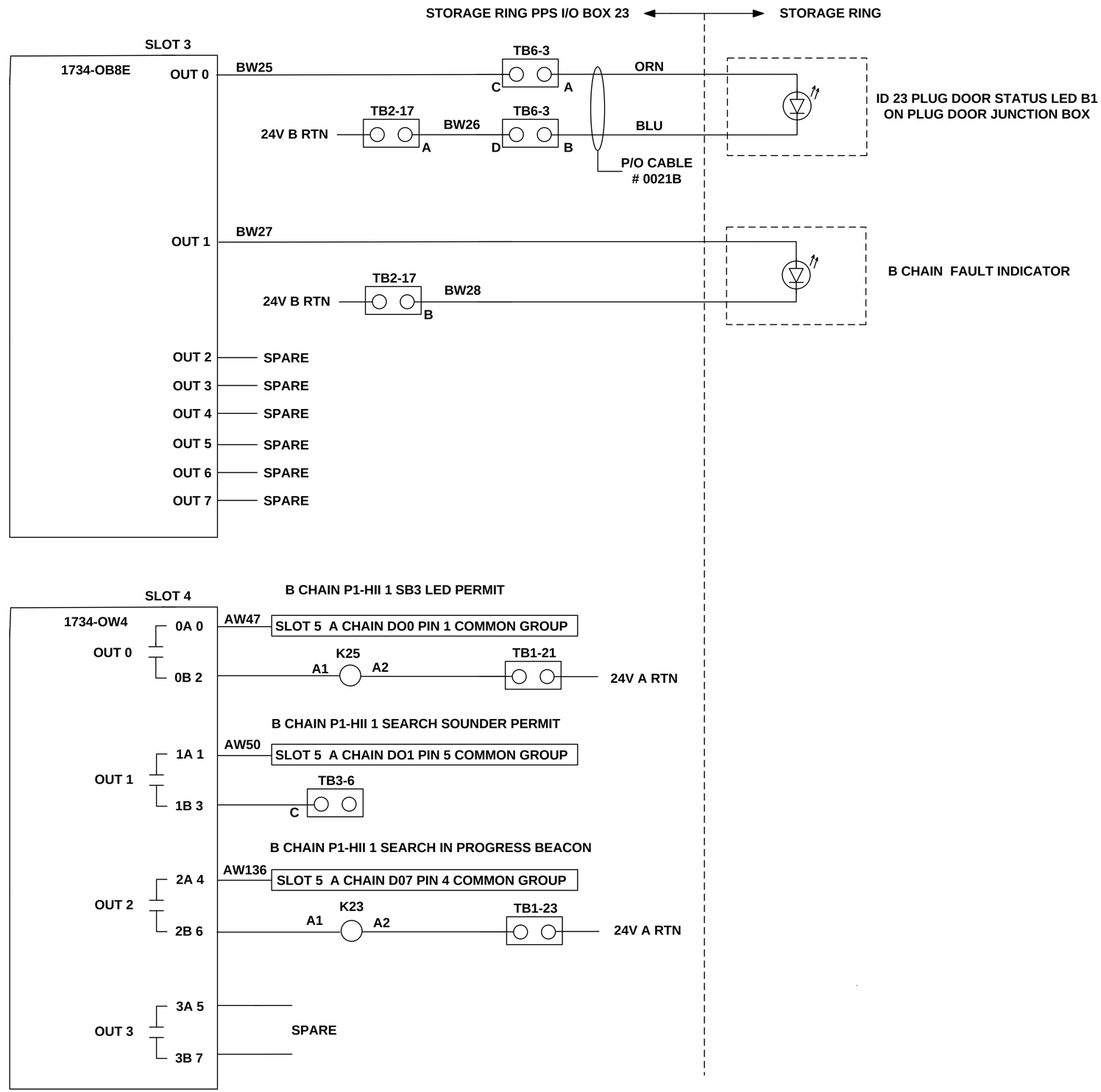

B

COMMON GROUP

HIGHEST WIRE REF DES	BW30
UNUSED WIRE REF DES	BW31-BW37
WIRE REF DES NOT USED	———

LT-EL-SR-EI-PPS-0223-90

LT-EL-SR-EI	LT-EL-SR-EI-PPS-0223-90	M
DRAWING DIRECTORY	DRAWING NUMBER	REV
COMPUTER REPRODUCIBLE	SCALE: N/A	SHEET 36 OF 63

REV	DESCRIPTION	BY	DATE	CHK	APP
	SEE SHEET 1				

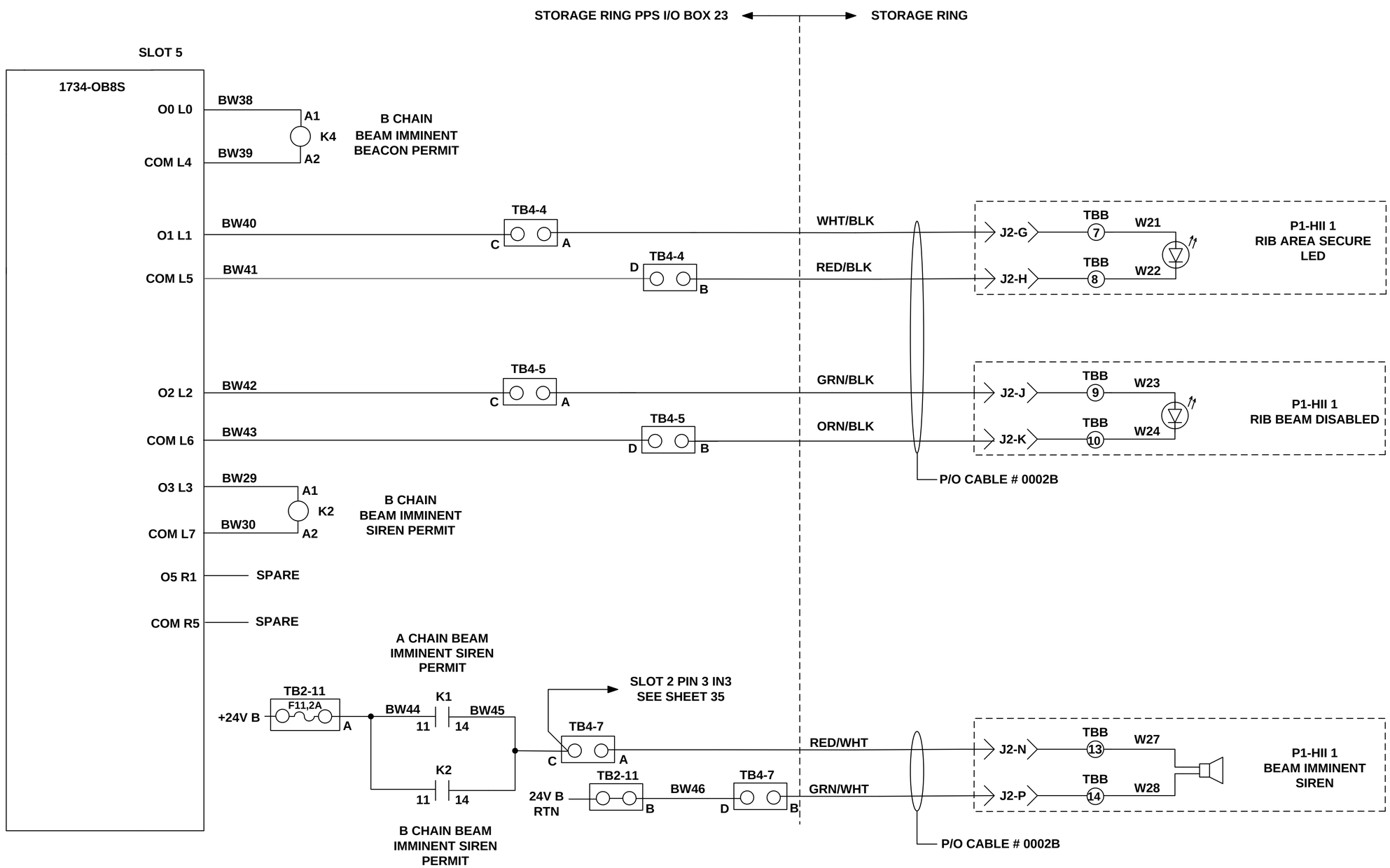

B

COMMON GROUP

HIGHEST WIRE REF DES	BW46
UNUSED WIRE REF DES	BW47-BW49
WIRE REF DES NOT USED	————

LT-EL-SR-EI-PPS-0223-90

LT-EL-SR-EI DRAWING DIRECTORY	LT-EL-SR-EI-PPS-0223-90 DRAWING NUMBER	M REV
COMPUTER REPRODUCIBLE	SCALE: N/A	SHEET 37 OF 63

REV	DESCRIPTION	BY	DATE	CHK	APP
	SEE SHEET 1				

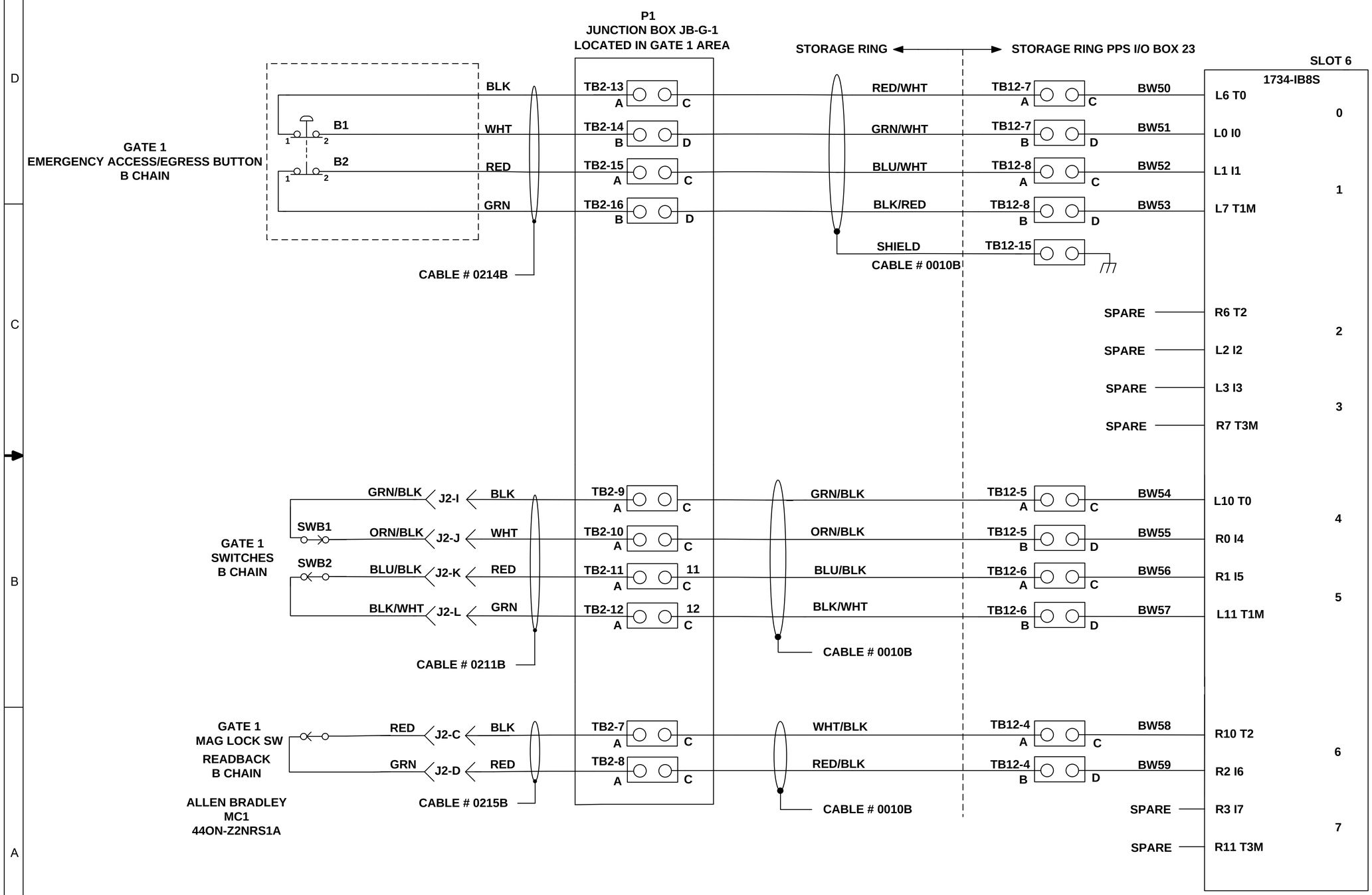

B

GATE / LABYRINTH / GROUP

GATE 1

HIGHEST WIRE REF DES	BW59
UNUSED WIRE REF DES	BW60-BW63
WIRE REF DES NOT USED	————

LT-EL-SR-EI-PPS-0223-90

LT-EL-SR-EI (DRAWING DIRECTORY)	LT-EL-SR-EI-PPS-0223-90 (DRAWING NUMBER)	M (REV)
COMPUTER REPRODUCIBLE	SCALE: N/A	SHEET 38 OF 63

REV	DESCRIPTION	BY	DATE	CHK	APP
	SEE SHEET 1				

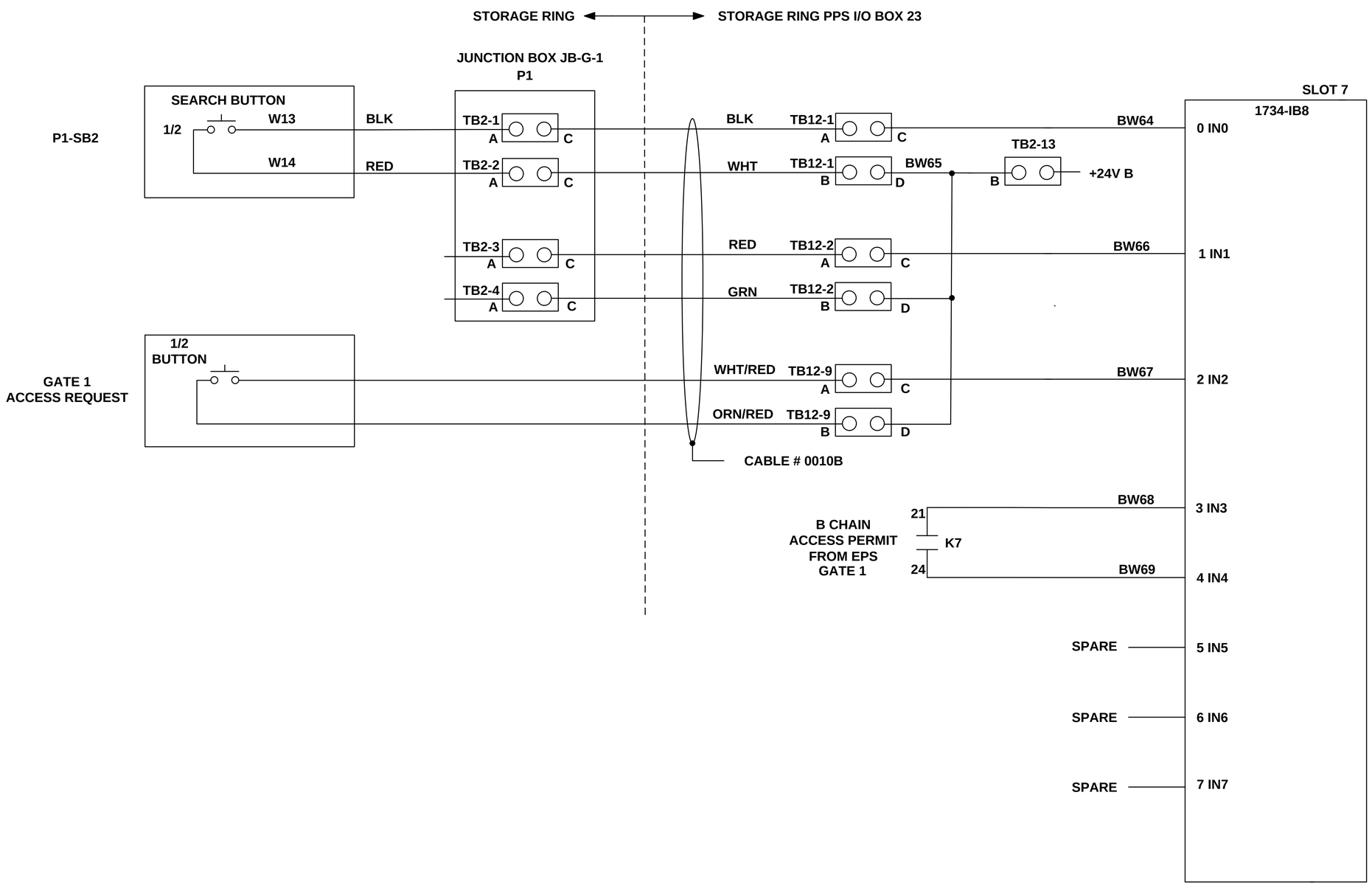

B

GATE / LABYRINTH / GROUP

GATE 1

HIGHEST WIRE REF DES	BW69
UNUSED WIRE REF DES	BW70-BW73
WIRE REF DES NOT USED	————

LT-EL-SR-EI-PPS-0223-90

LT-EL-SR-EI DRAWING DIRECTORY	LT-EL-SR-EI-PPS-0223-90 DRAWING NUMBER	M REV
COMPUTER REPRODUCIBLE	SCALE: N/A	SHEET 39 OF 63

REV	DESCRIPTION	BY	DATE	CHK	APP
	SEE SHEET 1				

STORAGE RING PPS I/O BOX 23 ⟷ STORAGE RING

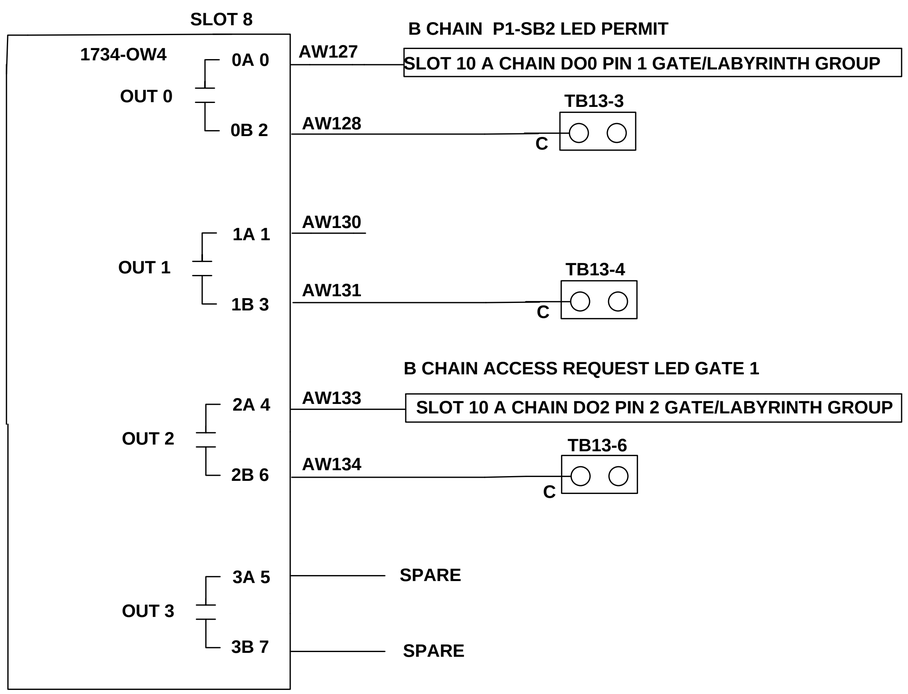

B

GATE / LABYRINTH / GROUP

GATE 1

HIGHEST WIRE REF DES	
UNUSED WIRE REF DES	
WIRE REF DES NOT USED	

LT-EL-SR-EI-PPS-0223-90

LT-EL-SR-EI DRAWING DIRECTORY	LT-EL-SR-EI-PPS-0223-90 DRAWING NUMBER	M REV
COMPUTER REPRODUCIBLE	SCALE: N/A	SHEET 40 OF 63

REV	DESCRIPTION	BY	DATE	CHK	APP
	SEE SHEET 1				

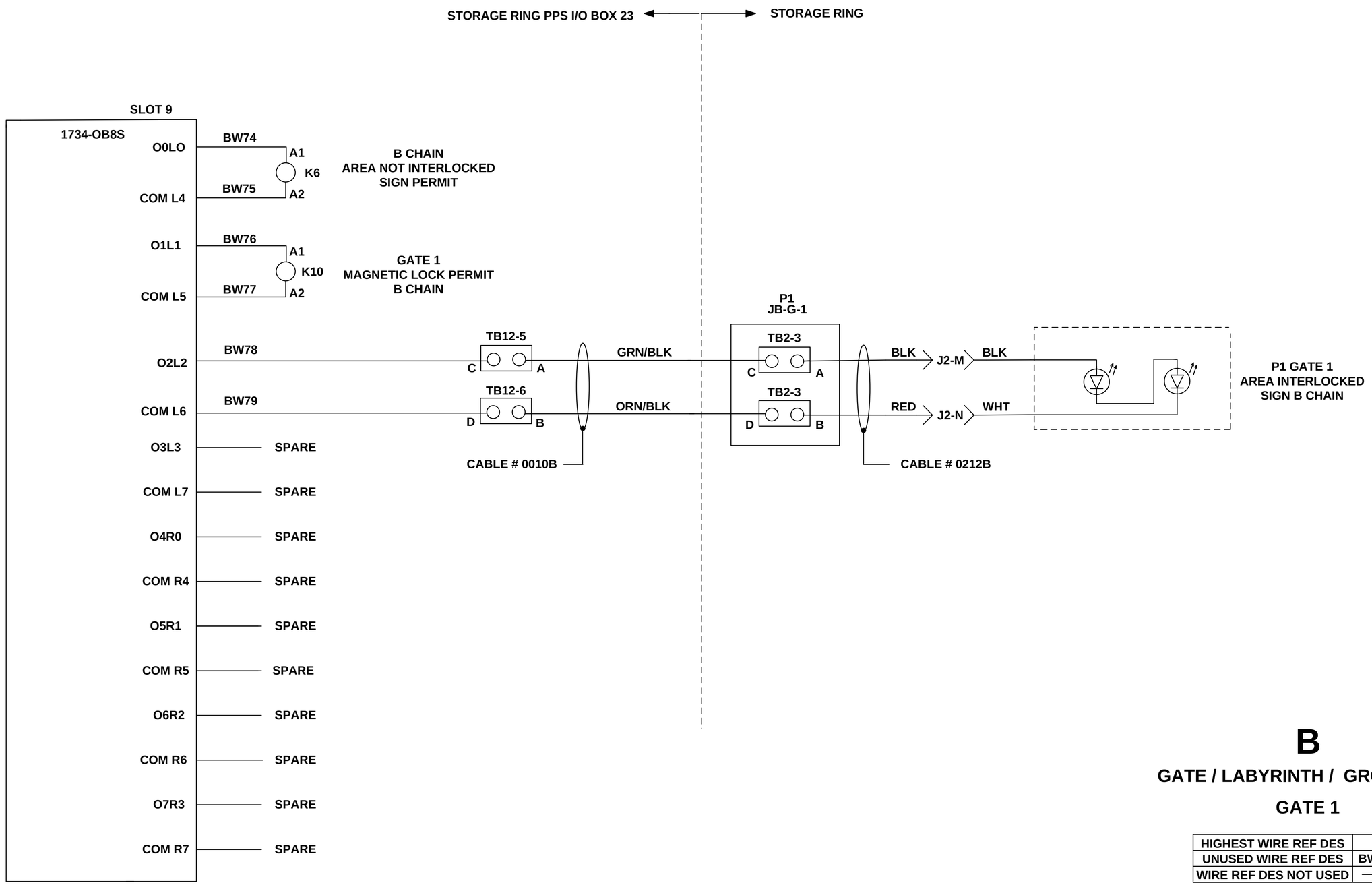

B

GATE / LABYRINTH / GROUP

GATE 1

HIGHEST WIRE REF DES	BW79
UNUSED WIRE REF DES	BW80-BW81
WIRE REF DES NOT USED	————

LT-EL-SR-EI-PPS-0223-90

LT-EL-SR-EI DRAWING DIRECTORY	LT-EL-SR-EI-PPS-0223-90 DRAWING NUMBER	M REV
COMPUTER REPRODUCIBLE	SCALE: N/A	SHEET 41 OF 63

REV	DESCRIPTION	BY	DATE	CHK	APP
	SEE SHEET 1				

LT-EL-SR-EI-PPS-0223-90

SHEET LEFT BLANK
FOR FUTURE DATA

LT-EL-SR-EI	LT-EL-SR-EI-PPS-0223-90	M
DRAWING DIRECTORY	DRAWING NUMBER	REV
COMPUTER REPRODUCIBLE	SCALE: N/A	SHEET 42 OF 63

REV	DESCRIPTION	BY	DATE	CHK	APP
	SEE SHEET 1				

LT-EL-SR-EI-PPS-0223-90

SHEET LEFT BLANK
FOR FUTURE DATA

LT-EL-SR-EI	LT-EL-SR-EI-PPS-0223-90	M
DRAWING DIRECTORY	DRAWING NUMBER	REV
COMPUTER REPRODUCIBLE	SCALE: N/A	SHEET 43 OF 63

REV	DESCRIPTION	BY	DATE	CHK	APP
	SEE SHEET 1				

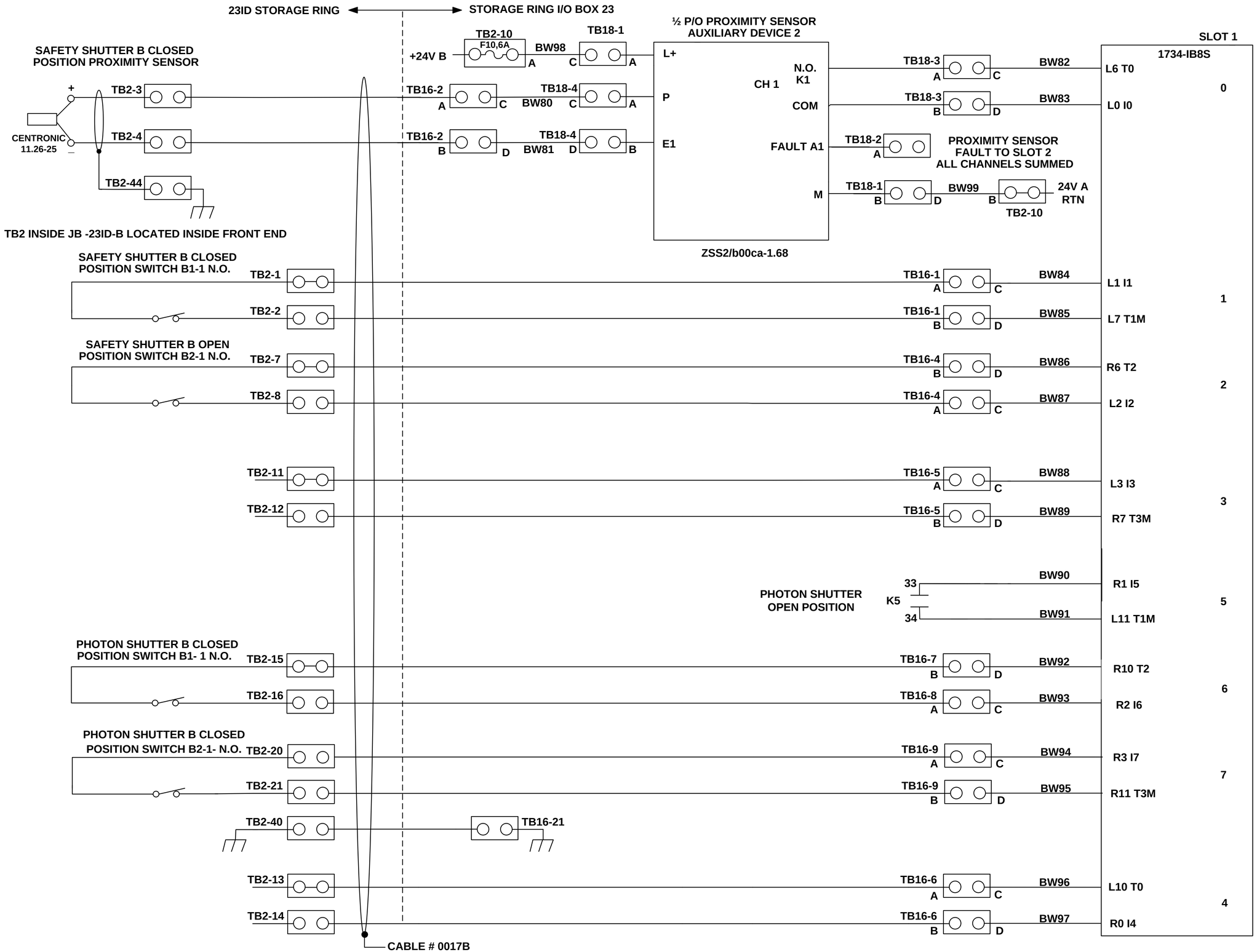

B

ID BEAMLINE GROUP

23ID

HIGHEST WIRE REF DES	BW99
UNUSED WIRE REF DES	BW100-BW101
WIRE REF DES NOT USED	————

LT-EL-SR-EI-PPS-0223-90

LT-EL-SR-EI (DRAWING DIRECTORY)	LT-EL-SR-EI-PPS-0223-90 (DRAWING NUMBER)	M (REV)
COMPUTER REPRODUCIBLE	SCALE: N/A	SHEET 44 OF 63

REV	DESCRIPTION	BY	DATE	CHK	APP
	SEE SHEET 1				

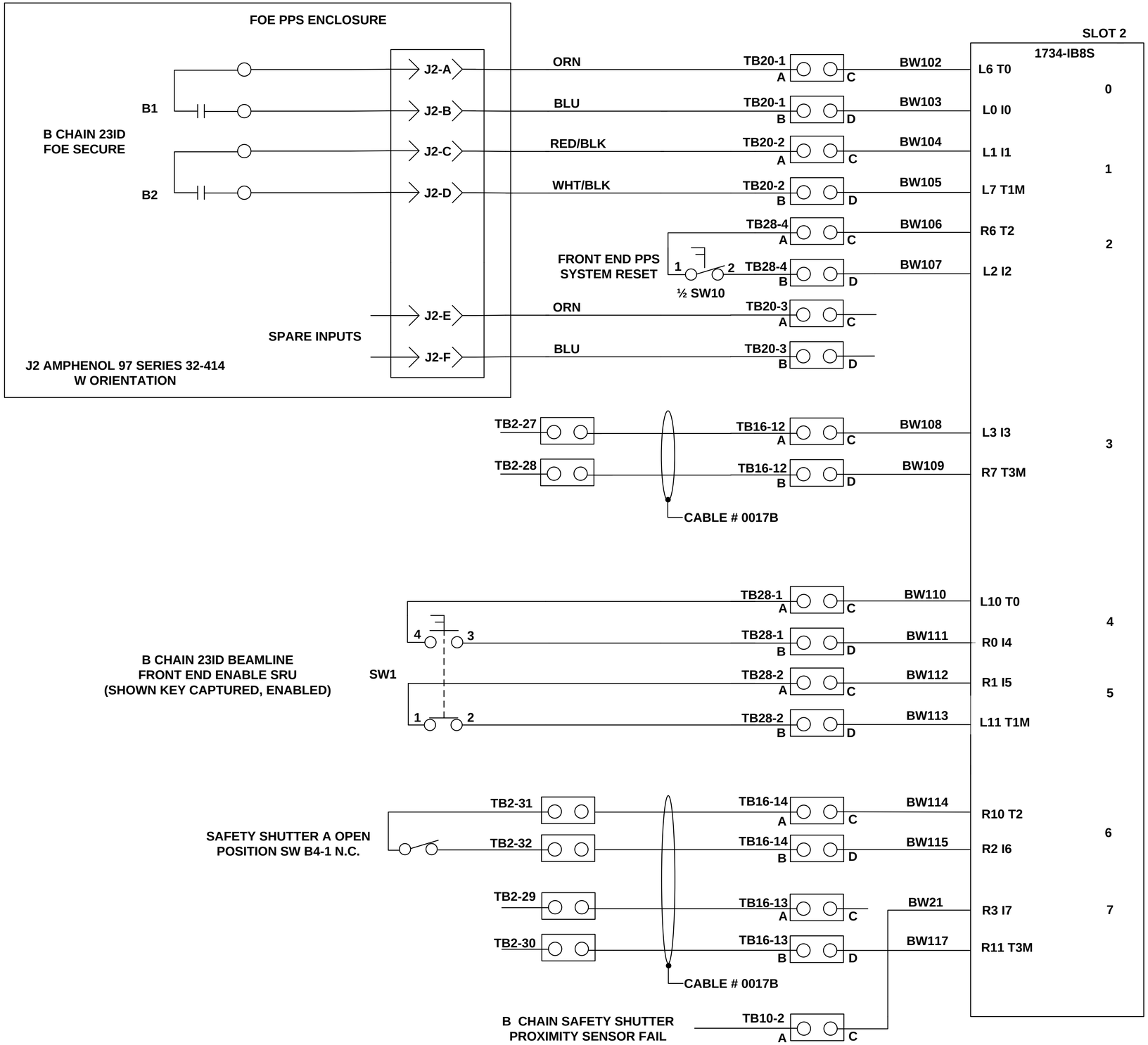

B

ID BEAMLINE GROUP

23ID

HIGHEST WIRE REF DES	BW117
UNUSED WIRE REF DES	BW118
WIRE REF DES NOT USED	———

LT-EL-SR-EI-PPS-0223-90

LT-EL-SR-EI (DRAWING DIRECTORY)	LT-EL-SR-EI-PPS-0223-90 (DRAWING NUMBER)	M (REV)
COMPUTER REPRODUCIBLE	SCALE: N/A	SHEET 45 OF 63

REV	DESCRIPTION	BY	DATE	CHK	APP
	SEE SHEET 1				

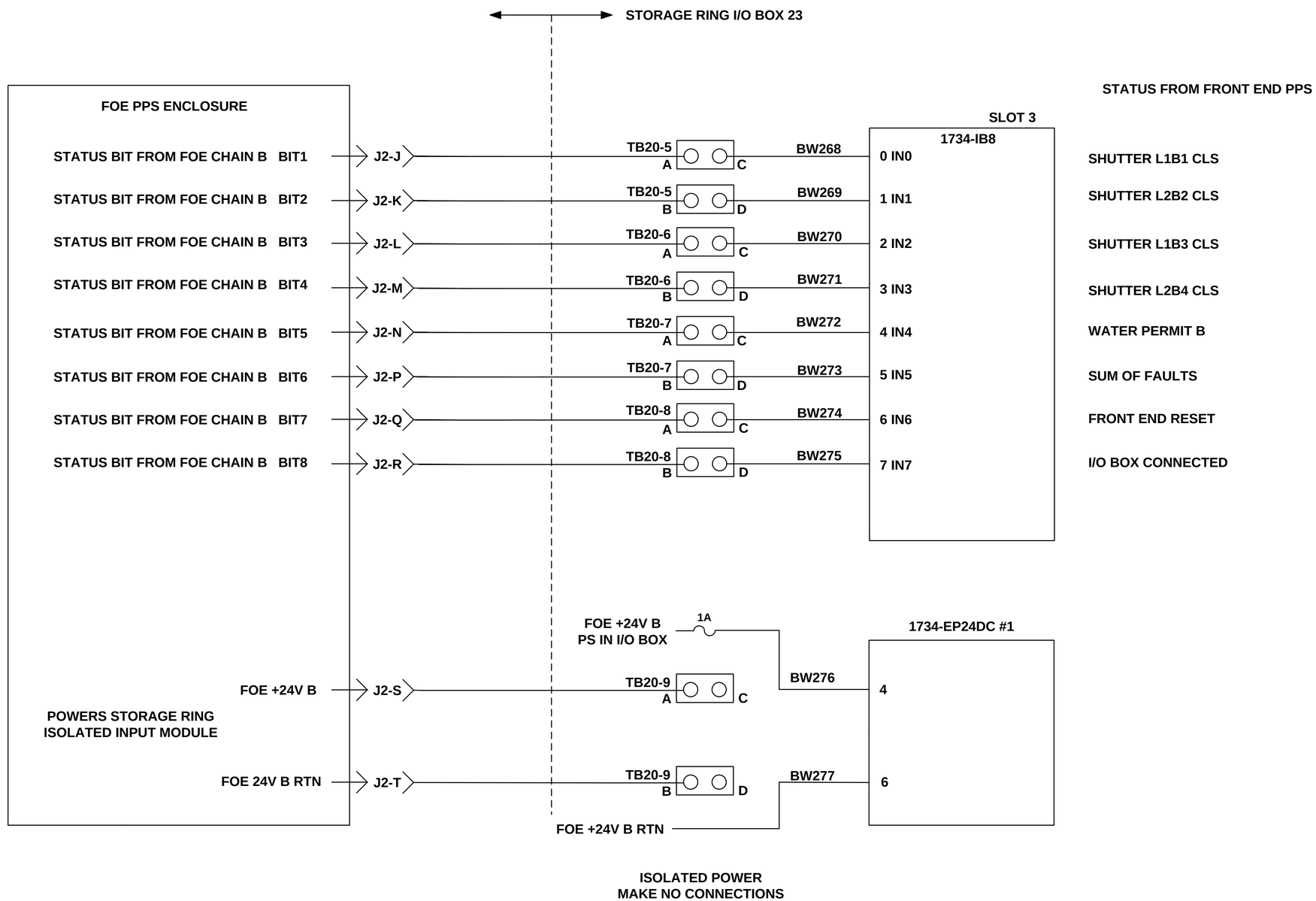

B

ID BEAMLINE GROUP

23ID

HIGHEST WIRE REF DES	BW277
UNUSED WIRE REF DES	————
WIRE REF DES NOT USED	————

LT-EL-SR-EI-PPS-0223-90

LT-EL-SR-EI DRAWING DIRECTORY	LT-EL-SR-EI-PPS-0223-90 DRAWING NUMBER	M REV
COMPUTER REPRODUCIBLE	SCALE: N/A	SHEET 46 OF 63

REV	DESCRIPTION	BY	DATE	CHK	APP
	SEE SHEET 1				

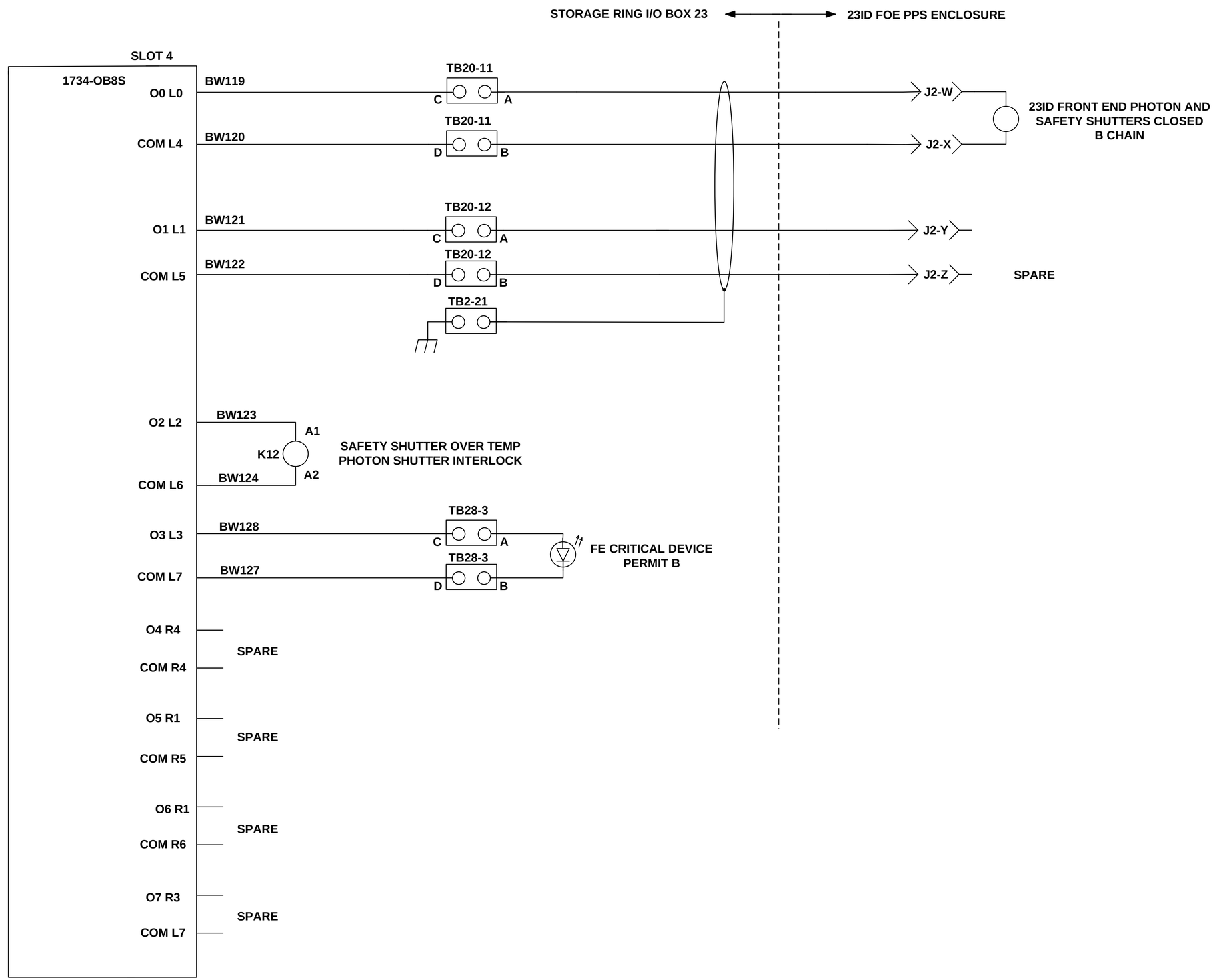

B

ID BEAMLINE GROUP

23ID

HIGHEST WIRE REF DES	BW122
UNUSED WIRE REF DES	BW125-BW127
WIRE REF DES NOT USED	————

LT-EL-SR-EI-PPS-0223-90

LT-EL-SR-EI DRAWING DIRECTORY	LT-EL-SR-EI-PPS-0223-90 DRAWING NUMBER	M REV
COMPUTER REPRODUCIBLE	SCALE: N/A	SHEET 47 OF 63

REV	DESCRIPTION	BY	DATE	CHK	APP
	SEE SHEET 1				

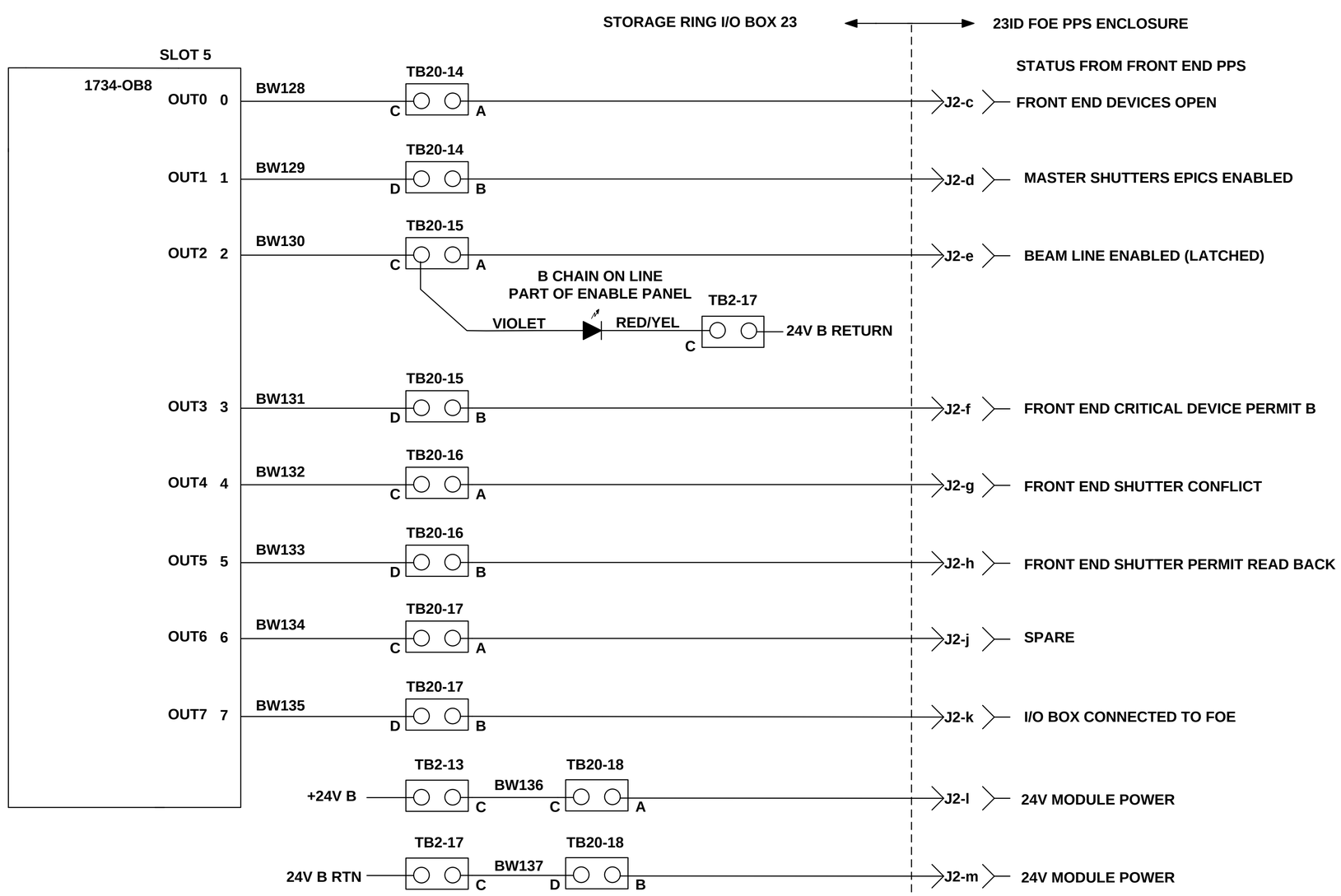

B

ID BEAMLINE GROUP

23ID

HIGHEST WIRE REF DES	BW137
UNUSED WIRE REF DES	BW138-BW140
WIRE REF DES NOT USED	————

LT-EL-SR-EI-PPS-0223-90

LT-EL-SR-EI DRAWING DIRECTORY	LT-EL-SR-EI-PPS-0223-90 DRAWING NUMBER	M REV
COMPUTER REPRODUCIBLE	SCALE: N/A	SHEET 48 OF 63

REV	DESCRIPTION	BY	DATE	CHK	APP
	SEE SHEET 1				

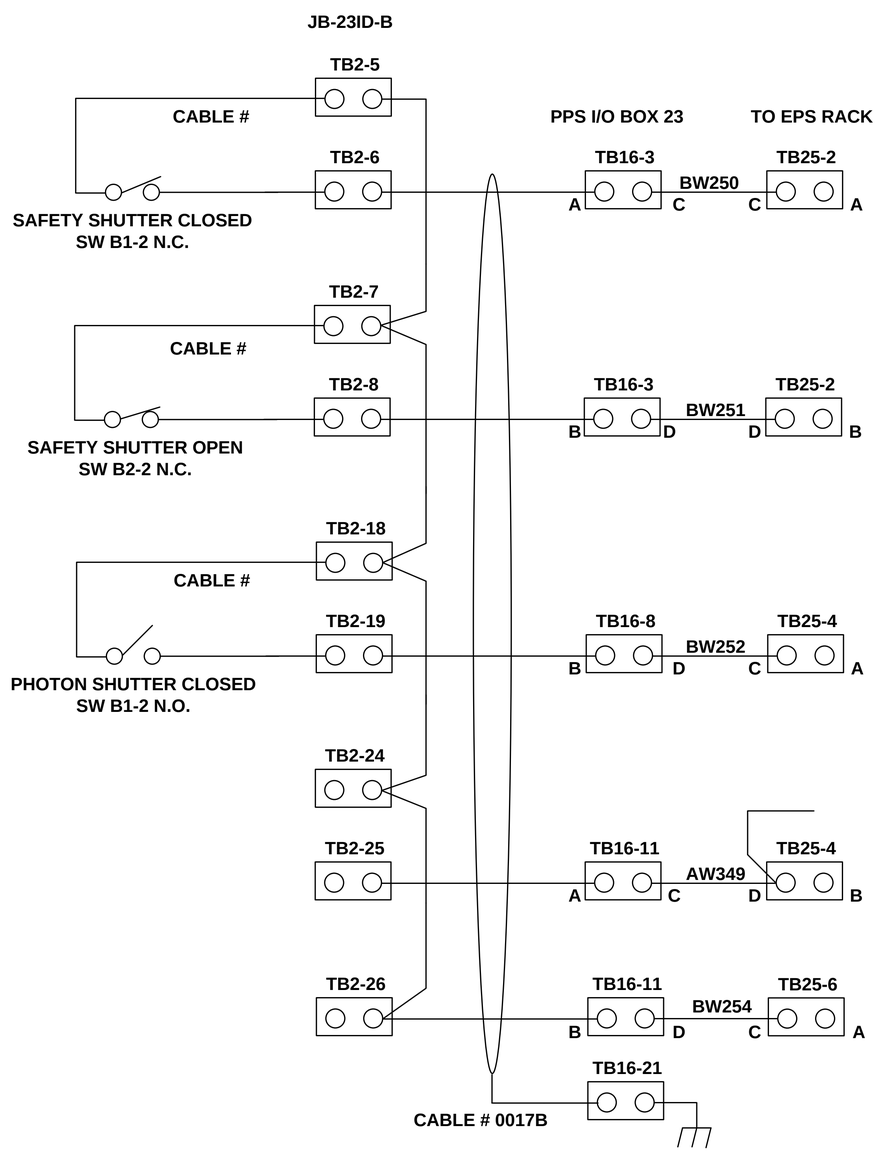

B

ID BEAMLINE GROUP

23ID

HIGHEST WIRE REF DES	
UNUSED WIRE REF DES	
WIRE REF DES NOT USED	

LT-EL-SR-EI-PPS-0223-90

LT-EL-SR-EI DRAWING DIRECTORY	LT-EL-SR-EI-PPS-0223-90 DRAWING NUMBER	M REV
COMPUTER REPRODUCIBLE	SCALE: N/A	SHEET 49 OF 63

REV	DESCRIPTION	BY	DATE	CHK	APP
	SEE SHEET 1				

LT-EL-SR-EI-PPS-0223-90

SHEET LEFT BLANK
FOR FUTURE DATA

LT-EL-SR-EI	LT-EL-SR-EI-PPS-0223-90	M
DRAWING DIRECTORY	DRAWING NUMBER	REV
COMPUTER REPRODUCIBLE	SCALE: N/A	SHEET 50 OF 63

REV	DESCRIPTION	BY	DATE	CHK	APP
	SEE SHEET 1				

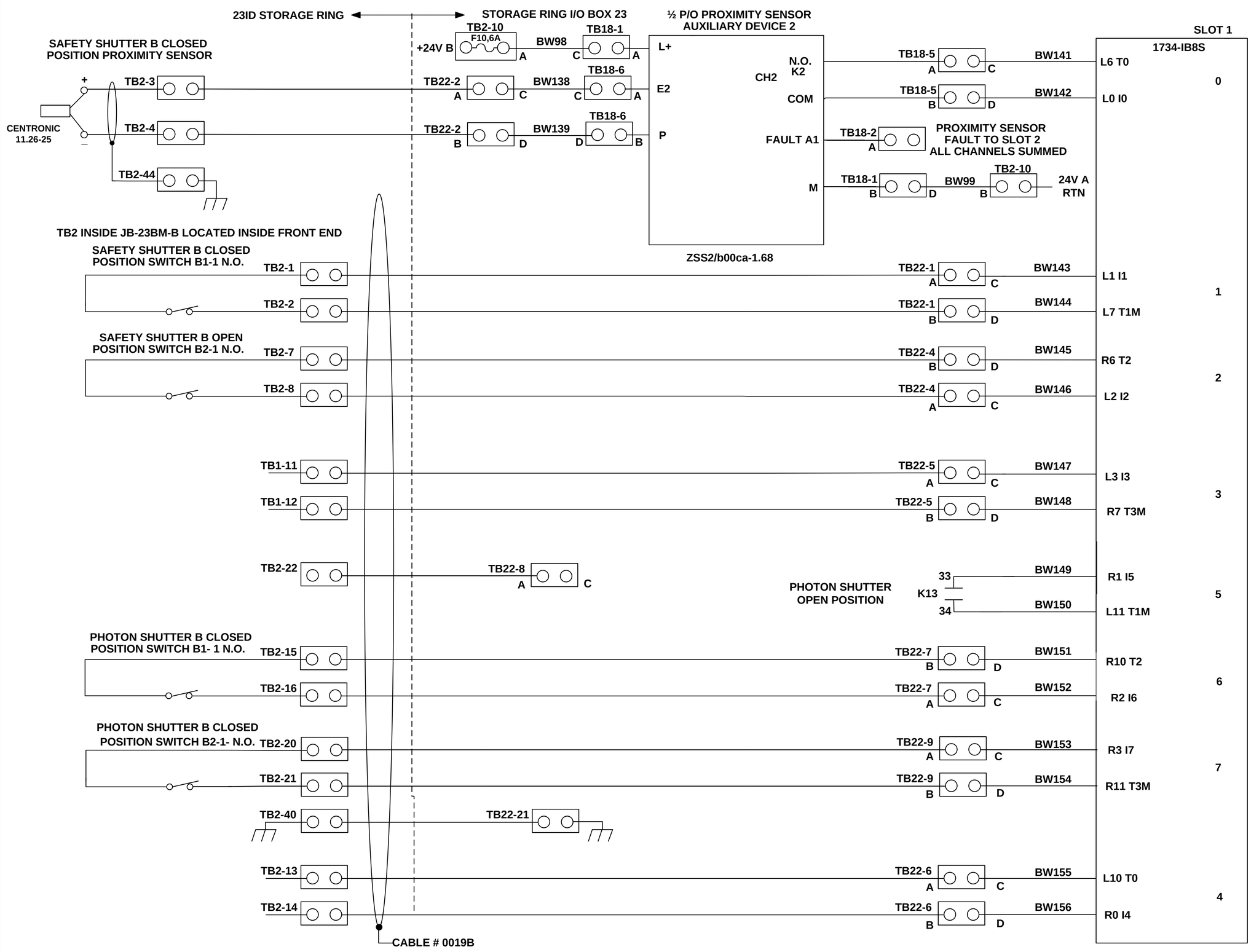

B

BM BEAMLINE GROUP

23BM

HIGHEST WIRE REF DES	BW158
UNUSED WIRE REF DES	BW159-BW160
WIRE REF DES NOT USED	BW140

LT-EL-SR-EI-PPS-0223-90

LT-EL-SR-EI (DRAWING DIRECTORY)	LT-EL-SR-EI-PPS-0223-90 (DRAWING NUMBER)	M (REV)
COMPUTER REPRODUCIBLE	SCALE: N/A	SHEET 51 OF 63

REV	DESCRIPTION	BY	DATE	CHK	APP
	SEE SHEET 1				

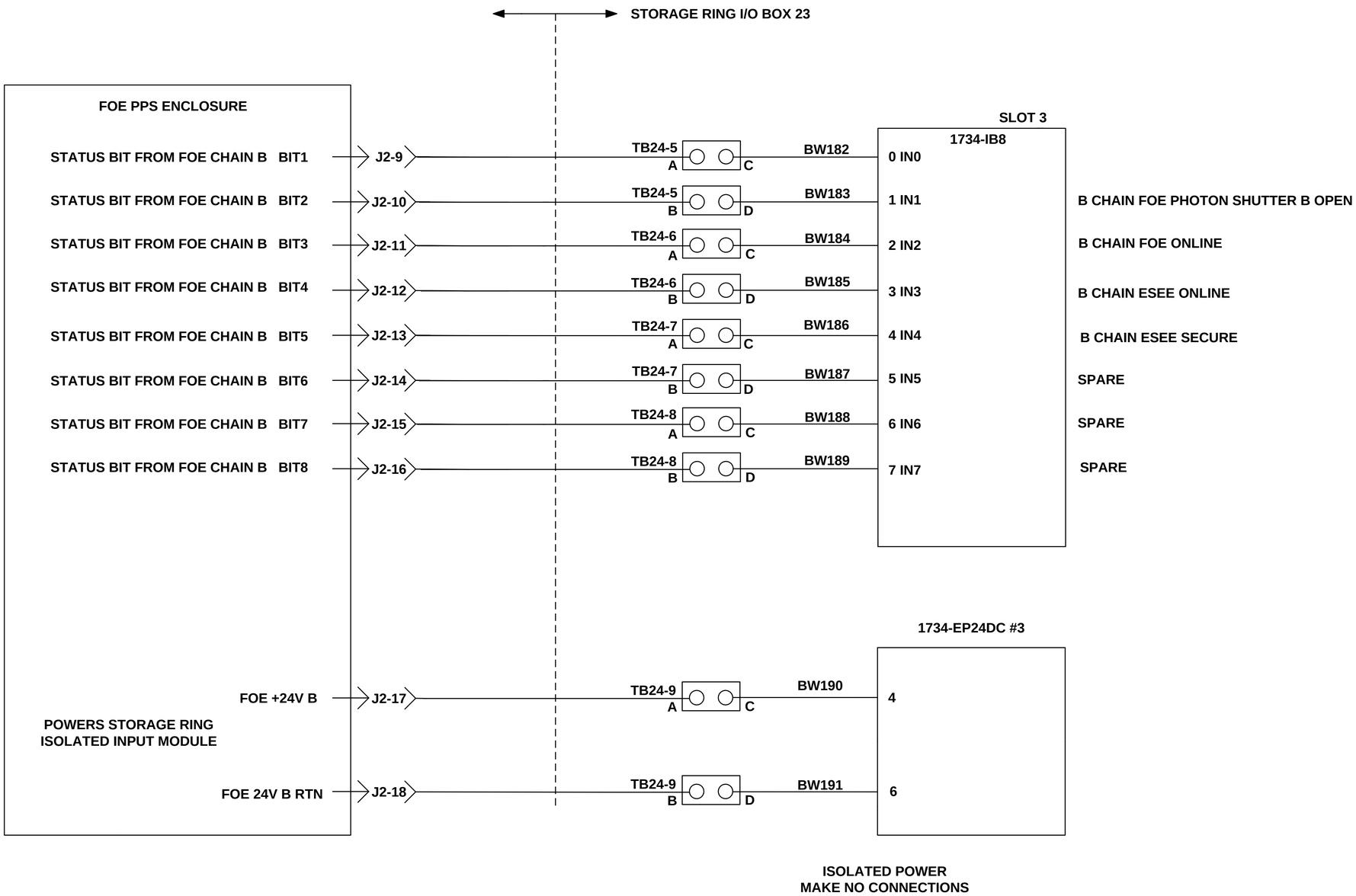

B

BM BEAMLINE GROUP

23BM

HIGHEST WIRE REF DES	BW191
UNUSED WIRE REF DES	BW192-BW197
WIRE REF DES NOT USED	————

LT-EL-SR-EI-PPS-0223-90

LT-EL-SR-EI DRAWING DIRECTORY	LT-EL-SR-EI-PPS-0223-90 DRAWING NUMBER	M REV
COMPUTER REPRODUCIBLE	SCALE: N/A	SHEET 52 OF 63

REV	DESCRIPTION	BY	DATE	CHK	APP
	SEE SHEET 1				

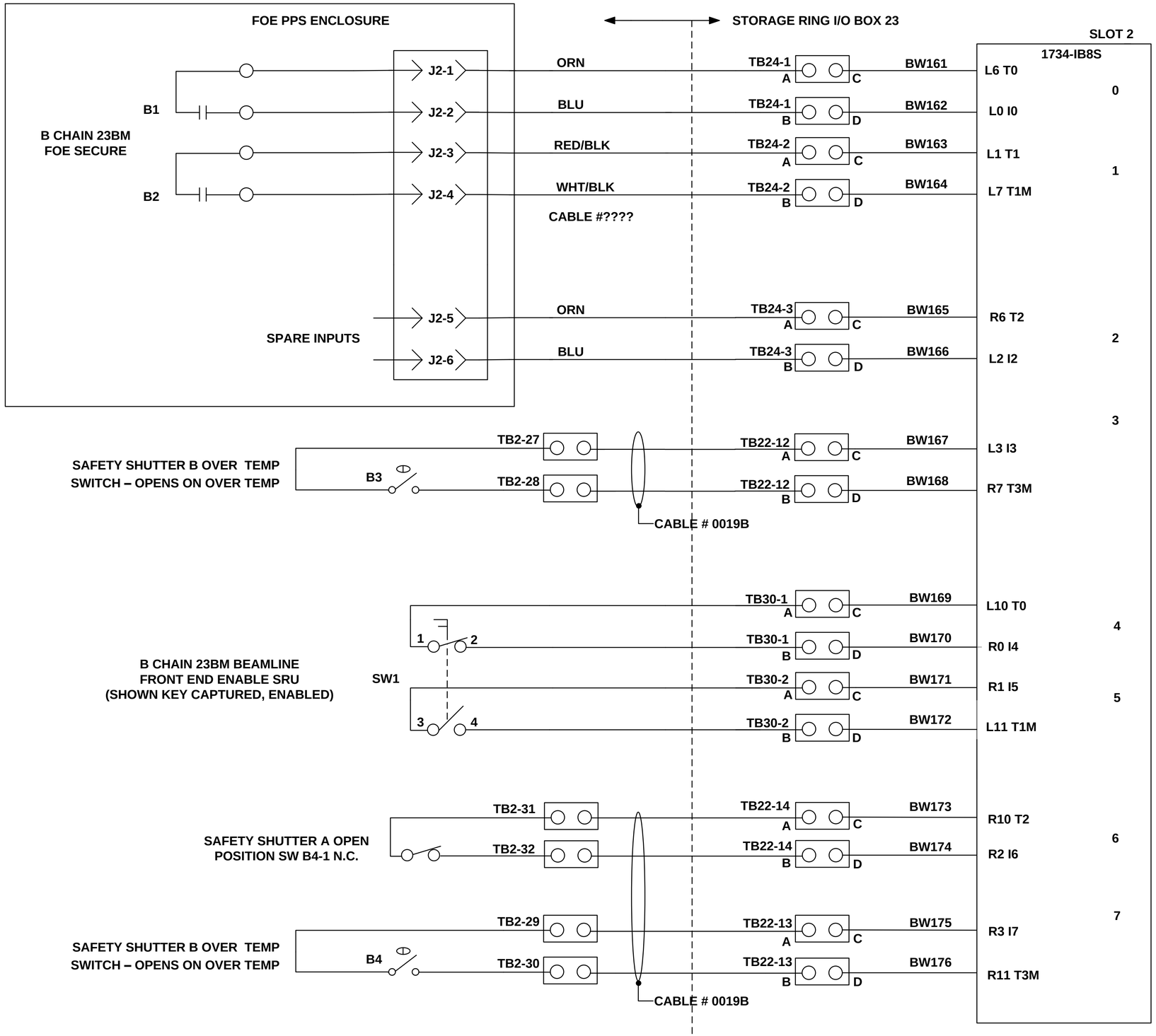

B

BM BEAMLINE GROUP

23BM

HIGHEST WIRE REF DES	BW176
UNUSED WIRE REF DES	BW177-BW181
WIRE REF DES NOT USED	————

LT-EL-SR-EI-PPS-0223-90

LT-EL-SR-EI (DRAWING DIRECTORY)	LT-EL-SR-EI-PPS-0223-90 (DRAWING NUMBER)	M (REV)
COMPUTER REPRODUCIBLE	SCALE: N/A	SHEET 53 OF 63

REV	DESCRIPTION	BY	DATE	CHK	APP
	SEE SHEET 1				

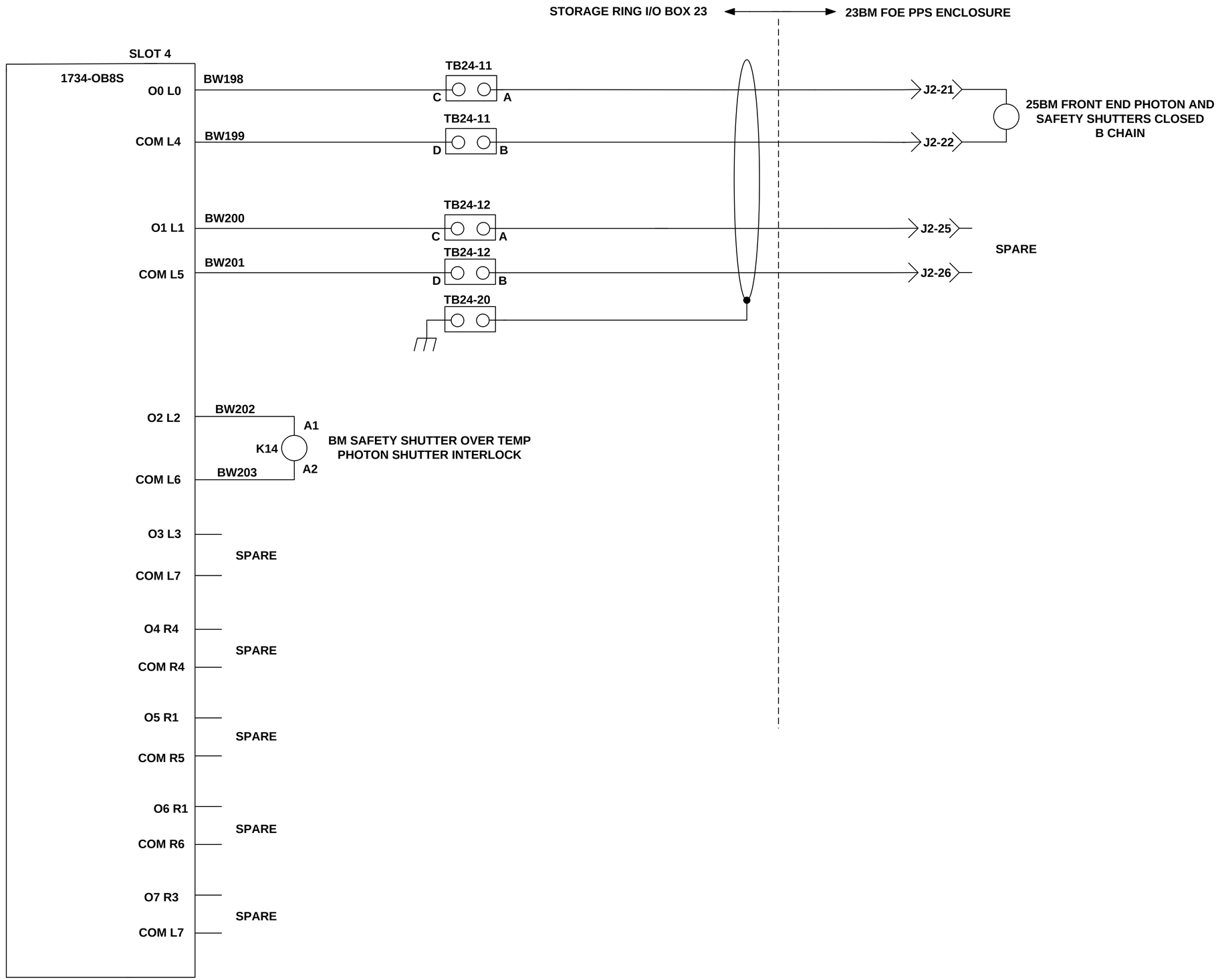

B

BM BEAMLINE GROUP

23BM

HIGHEST WIRE REF DES	BW201
UNUSED WIRE REF DES	BW204-BW205
WIRE REF DES NOT USED	————

LT-EL-SR-EI-PPS-0223-90

LT-EL-SR-EI (DRAWING DIRECTORY)	LT-EL-SR-EI-PPS-0223-90 (DRAWING NUMBER) H	M (REV)
COMPUTER REPRODUCIBLE	SCALE: N/A	SHEET 54 OF 63

REV	DESCRIPTION	BY	DATE	CHK	APP
	SEE SHEET 1				

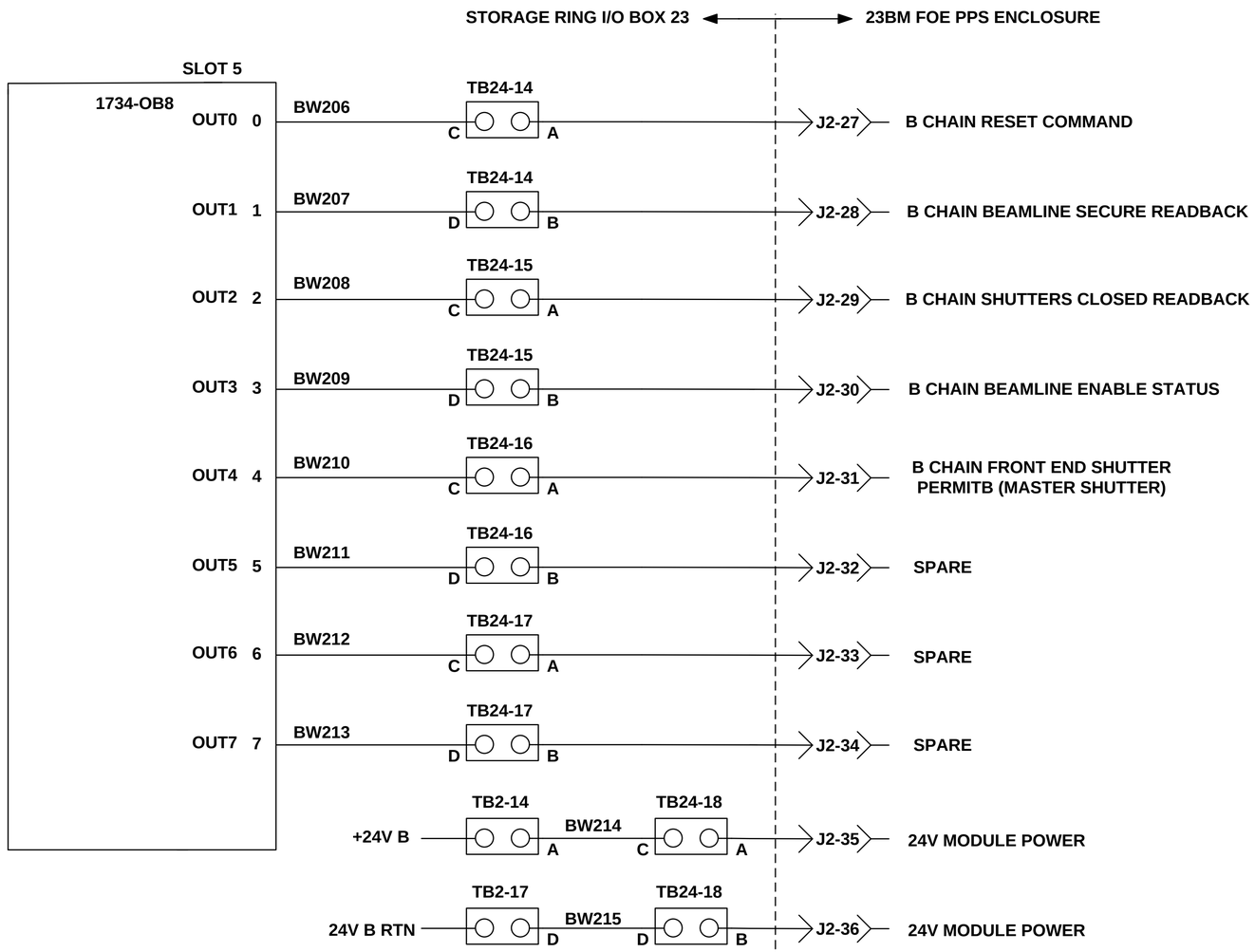

B

BM BEAMLINE GROUP

23BM

HIGHEST WIRE REF DES	BW215
UNUSED WIRE REF DES	BW216-BW218
WIRE REF DES NOT USED	————

LT-EL-SR-EI-PPS-0223-90

LT-EL-SR-EI DRAWING DIRECTORY	LT-EL-SR-EI-PPS-0223-90 DRAWING NUMBER	M REV
COMPUTER REPRODUCIBLE	SCALE: N/A	SHEET 55 OF 63

REV	DESCRIPTION	BY	DATE	CHK	APP
	SEE SHEET 1				

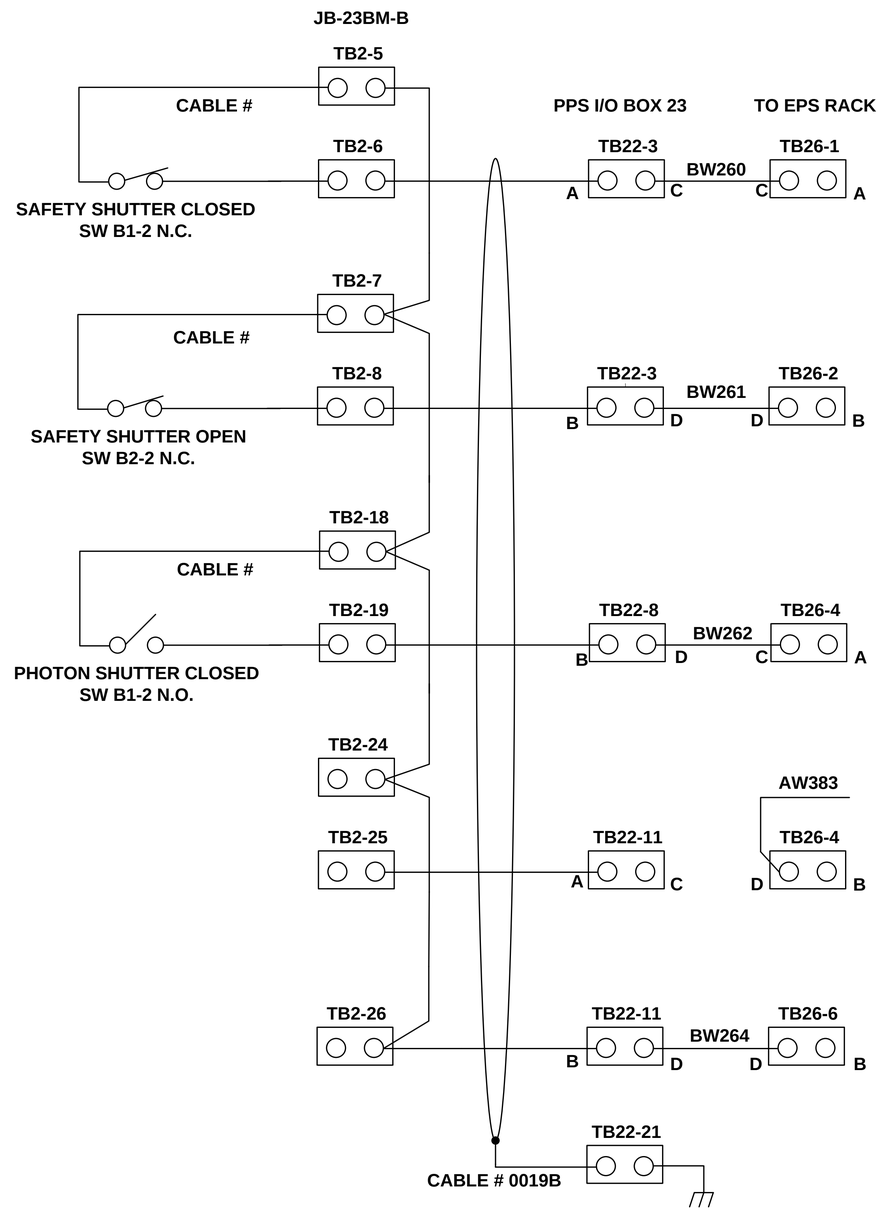

B

BM BEAMLINE GROUP

23BM

HIGHEST WIRE REF DES	BW264
UNUSED WIRE REF DES	———
WIRE REF DES NOT USED	———

LT-EL-SR-EI-PPS-0223-90

LT-EL-SR-EI DRAWING DIRECTORY	LT-EL-SR-EI-PPS-0223-90 DRAWING NUMBER	M REV
COMPUTER REPRODUCIBLE	SCALE: N/A	SHEET 56 OF 63

REV	DESCRIPTION	BY	DATE	CHK	APP
	SEE SHEET 1				

B CHAIN
+24V WIRES ARE BRN
24V RTN WIRES ARE GRY
SIGNAL WIRES ARE BLU

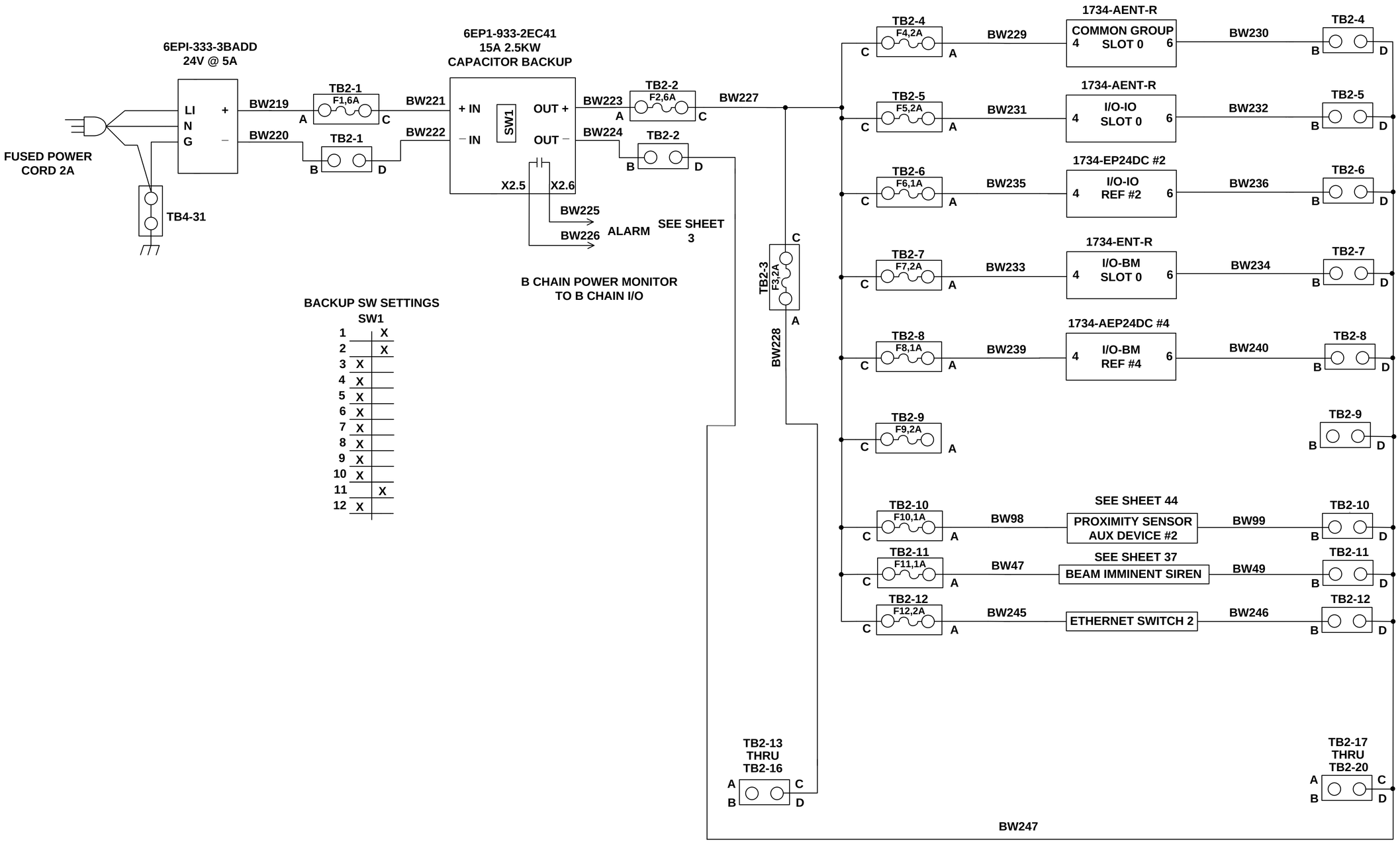

BACKUP SW SETTINGS
SW1

1		X
2		X
3	X	
4	X	
5	X	
6	X	
7	X	
8	X	
9	X	
10	X	
11		X
12	X	

POWER DISTRIBUTION

B

LT-EL-SR-EI-PPS-0223-90

HIGHEST WIRE REF DES	BW247
UNUSED WIRE REF DES	———
WIRE REF DES NOT USED	———

LT-EL-SR-EI (DRAWING DIRECTORY)	LT-EL-SR-EI-PPS-0223-90 (DRAWING NUMBER)	M (REV)
COMPUTER REPRODUCIBLE	SCALE: N/A	SHEET 57 OF 63

REV	DESCRIPTION	BY	DATE	CHK	APP
	SEE SHEET 1				

PPS I/O BOX TERMINAL LAYOUT TYPE 1

TYPE 1 I/O BOX					
ROW 1					
POWER SUPPLIES					
A CHAIN POWER SUPPLY		6EP1 333-3BA00			SIEMENS
A CHAIN CAPACITOR BACKUP		6EP1 333-2EC41			SIEMENS
A CHAIN SWITCH 2		6GK5208-0B810-2AA3			SIEMENS
B CHAIN SWITCH 2		1783-US03T0IF			ALLEN BRADLY
B CHAIN POWER SUPPLY		6EP1 333-3BA00			SIEMENS
B CHAIN CAPACITOR BACKUP		6EP1 333-2EC41			SIEMENS
ROW 2					
A CHAIN I/O					
I/O COMMON GROUP A					
SLOT	MODULE	SOCKET	SOCKET		
0	6ES7151-3BA23-0AB0	NA	PN INTERFACE MODULE IM151-3 PN		SIEMENS
1	6ES7138-4CA50-0AB0	6ES7193-4CC20-0AA0	POWER MODULE PM-E		
2	6ES7138-4FA04-0AB0	6ES7193-4CF40-0AA0	4/8FDI 8 SAFE IN		SIEMENS
3	6ES7138-4FA04-0AB0	6ES7193-4CF40-0AA0	4/8FDI 8 SAFE IN		SIEMENS
4	6ES7131-4BF00-0AB0	6ES7193-4CA40-0AA0	8DI 8 STANDARD IN		SIEMENS
5	6ES7132-4BF00-0AA0	6ES7193-4CA40-0AA0	8D0 STANDARD.OUT		SIEMENS
6	6ES7138-4FB03-0AA0	6ES7193-4CF40-0AA0	4FD0 4 SAFE OUT		SIEMENS

LT-EL-SR-EI-PPS-0223-90

REV	DESCRIPTION	BY	DATE	CHK	APP
	SEE SHEET 1				

PPS I/O BOX TERMINAL LAYOUT TYPE 1

I/O ID GATE/LABRYNTH GROUP A				
SLOT	MODULE	SOCKET		
7	6ES7138-4CA50-0AB0	6ES7193-4CC20-0AA0	POWER MODULE PM-E	SIEMENS
8	6ES7138-4FA04-0AB0	6ES7193-4CF40-0AA0	4/8FDI 8 SAFE IN	SIEMENS
9	6ES7131-4BF00-0AA0	6ES7193-4CA40-0AA0	8DI 8 STANDARD IN	SIEMENS
10	6ES7138-4FB03-0AB0	6ES7193-4CF40-0AA0	4FD0 8 SAFE OUT	SIEMENS
11	6ES7132-4BF00 0AA0	6ES7193-4CA40-0AA0	800 8 STANDARD OUT	SIEMENS
I/O ID BEAMLINE GROUP A				
SLOT	MODULE	SOCKET		
0	6ES7151-3BA23-0AB0	NA	PN INTERFACE MODULE IM151-3 PN	SIEMENS
1	6ES7138-4CA50-0AB0	6ES7193-4CC20-0AA0	POWER MODULE PM-E	SIEMENS
2	6ES7138-4FA04-0AB0	6ES7193-4CF40-0AA0	4/8FDI 8 SAFE IN	SIEMENS
3	6ES7138-4FA04-0AB0	6ES7193-4CF40-0AA0	4/8FDI 8 SAFE IN	SIEMENS
4	6ES7138-4CA50-0AB0	6ES7193-4CC20-0AA0	POWER MODULE PM-E	SIEMENS
5	6ES7131-4BF00-0AA0	6ES7193-4CA40-0AA0	8DI 8 STANDARD IN	SIEMENS
6	6ES7138-4CA50-0AB0	6ES7193-4CC20-0AA0	POWER MODULE PM-E	SIEMENS
7	6ES7138-4FB03-0AB0	6ES7193-4CF40-0AA0	4FD0 4 SAFE OUT	SIEMENS
8	6ES7132-4BF00-0AA0	6ES7193-4CA40-0AA0	8D0 STANDARD.OUT	SIEMENS
I/O BM BEAMLINE GROUP A				
SLOT	MODULE	SOCKET		
0	6ES7151-3BA23-0AB0	NA	PN INTERFACE MODULE IM151-3 PN	SIEMENS
1	6ES7138-4CA50-0AB0	6ES7193-4CC20-0AA0	POWER MODULE PM-E	SIEMENS
2	6ES7138-4FA04-0AB0	6ES7193-4CF40-0AA0	4/8FDI 8 SAFE IN	SIEMENS
3	6ES7138-4FA04-0AA0	6ES7193-4CF40-0AA0	4/8FDI 8 SAFE IN	SIEMENS
4	6ES7138-4CA50-0AB0	6ES7193-4CC20-0AA0	POWER MODULE PM-E	SIEMENS
5	6ES7131-4BF00-0AA0	6ES7193-4CA40-0AA0	8DI 8 STANDARD IN	SIEMENS
6	6ES7138-4CA50-0AB0	6ES7193-4CC20-0AA0	POWER MODULE PM-E	SIEMENS
7	6ES7138-4FB03-0AB0	6ES7193-4CF40-0AA0	4FD0 4 SAFE OUT	SIEMENS
8	6ES7132-4BF00-0AA0	6ES7193-4CA40-0AA0	8D0 STANDARD.OUT	SIEMENS
TB27	4-2 COVER LARGE 3	1>6 1		
TB29	4-2 COVER LARGE 3	1>6 1	END CLAMP 5	

1	3044636
2	3044092
3	3047293
4	3047303
5	1201413
6	EPDDFL4U
7	3044542
8	DDFL-4U
9	3044076
10	3047028
11	3047170

LT-EL-SR-EI-PPS-0223-90

LT-EL-SR-EI DRAWING DIRECTORY	LT-EL-SR-EI-PPS-0223-90 DRAWING NUMBER	M REV
COMPUTER REPRODUCIBLE	SCALE: N/A	SHEET 59 OF 63

REV	DESCRIPTION	BY	DATE	CHK	APP
	SEE SHEET 1				

PPS I/O BOX TERMINAL LAYOUT TYPE 1

ROW 3						
TB15	END CLAMP 5	4-2 COVER LARGE 3	1>20 1	4-2 COVER SMALL 4	21 2	
TB19	4-2 COVER LARGE 3	1>20 1	4-2 COVER SMALL 4	21 2		
TB21	4-2 COVER LARGE 3	1>20 1	4-2 COVER SMALL 4	21 2		
TB23	4-2 COVER LARGE 3	1>20 1	21 2			
TB25	4-2 COVER LARGE 3	1>5 1 / 6 7 / 7>15 1	16 2			
TB1	FUSE PLATE 6	1>12 8	13>21 7	END CLAMP 5		
			USE JUMPER STRIPS 1>12 AND 13>21			
SPACE FOR AUXILLRY DEVICE 1, A CHAIN		1.125"				
TB17	END CLAMP 5	4-2 COVER LARGE 3	1>6 1	4-2 COVER SMALL 4	END CLAMP 5	
ROW 4						
TB3	END CLAMP 5	4-2 COVER LARGE 3	1>7 1	4-2 COVER SMALL 4	8 2	
TB5	4-2 COVER LARGE 3	1>2 1	4-2 COVER SMALL 4	FUSE PLATE 6	3 8	4 9
TB7	4-2 COVER LARGE 3	1>2 1	4-2 COVER SMALL 4	FUSE PLATE 6	3 8	4 9
TB9	4-2 COVER LARGE 3	1>3 1	4-2 COVER SMALL 4	4 2		
TB11	4-2 COVER LARGE 3	1>3 1	4-2 COVER SMALL 4	4 2		
TB13	4-2 COVER LARGE 3	1>17 1	4-2 COVER SMALL 4	18 2	END CLAMP 5	

RELAY	MODULE	SOCKET	
K1	ALTECH 5669	SOCKET SCHRACK RT 78626	A CHAIN HII BEAM IMMINENT SIREN PERMIT
K3	ALTECH 5669	SOCKET SCHRACK RT 78626	A CHAIN HII BEAM IMMINENT BEACON PERMIT
K5	ELESTA SIM3	ELESTA SRD-SIM4	ID PHOTON SHUTTER OPEN FAN OUT RELAY

1	3044636
2	3044092
3	3047293
4	3047303
5	1201413
6	EPDDFL4U
7	3044542
8	DDFL-4U
9	3044076
10	3047028
11	3047170

LT-EL-SR-EI-PPS-0223-90

LT-EL-SR-EI (DRAWING DIRECTORY)	LT-EL-SR-EI-PPS-0223-90 (DRAWING NUMBER)	M (REV)
COMPUTER REPRODUCIBLE	SCALE: N/A	SHEET 60 OF 63

REV	DESCRIPTION	BY	DATE	CHK	APP

RELAY	MODULE	SOCKET	
K7	ALTECH 5669	SOCKET SCHRACK RT 78626	A CHAIN ACCESS PERMIT RELAY
K9	ALTECH 5669	SOCKET SCHRACK RT 78626	A CHAIN LOCK PERMIT
K11	ALTECH 5669	SOCKET SCHRACK RT 78626	A CHAIN ID MASTER SHUTTER RELAY
K13	ELESTA SIM3	SOCKET ELESTA SRD-SIM4	BM PHOTON SHUTTER OPEN FAN OUT RELAY
K15	ALTECH 5669	SOCKET SCHRACK RT 78626	ID REQUEST TO CLOSE SHUTTERS
K17	ALTECH 5669	SOCKET SCHRACK RT 78626	BM REQUEST TO CLOSE SHUTTERS
K19	ALTECH 5669	SOCKET SCHRACK RT 78626	ID SAFETY SHUTTER OVER TEMP,PHOTON SHUTTER INTERLOCK A CHAIN
K21	ALTECH 5669	SOCKET SCHRACK RT 78626	BM SAFETY SHUTTER OVER TEMP,PHOTON SHUTTER INTERLOCK A CHAIN
K12	ELESTA SRG282Z	SOCKET SCHRACK RT 78626	ID SAFETY SHUTTER OVER TEMP,PHOTON SHUTTER INTERLOCK B CHAIN
K14	ELESTA SRG282Z	SOCKET SCHRACK RT 78626	BM SAFETY SHUTTER OVER TEMP,PHOTON SHUTTER INTERLOCK B CHAIN
K2	ELESTA SRG282Z	SOCKET SCHRACK RT 78626	B CHAIN HII BEAM IMMINENT SIREN PERMIT
K4	ELESTA SRG282Z	SOCKET SCHRACK RT 78626	B CHAIN HII BEAM IMMINENT BEACON PERMIT
K6	ELESTA SRG282Z	SOCKET SCHRACK RT 78626	B CHAIN AREA SAFE SIGN PERMIT
K10	ELESTA SRG282Z	SOCKET SCHRACK RT 78626	B CHAIN DOOR LOCK PERMIT

TB4	END CLAMP 5	4-2 COVER LARGE 3	1>10 1	4-2 COVER SMALL 4	11 2
TB6	4-2 COVER LARGE 3	1>3 1	4-2 COVER SMALL 4	4 2	
TB8	4-2 COVER LARGE 3	1>3 1	4-2 COVER SMALL 4	4 2	
TB12	4-2 COVER LARGE 3	1>9 1	4-2 COVER SMALL 4	10 2	END CLAMP 5

1	3044636
2	3044092
3	3047293
4	3047303
5	1201413
6	EPDDFL4U
7	3044542
8	DDFL-4U
9	3044076
10	3047028
11	3047170

LT-EL-SR-EI-PPS-0223-90

LT-EL-SR-EI DRAWING DIRECTORY	LT-EL-SR-EI-PPS-0223-90 DRAWING NUMBER	M REV
COMPUTER REPRODUCIBLE	SCALE: N/A	SHEET 61 OF 63

REV	DESCRIPTION	BY	DATE	CHK	APP
	SEE SHEET 1				

PPS I/O BOX TERMINAL LAYOUT TYPE 1

ROW 5					
B CHAIN I/O					
I/O COMMON GROUP B					
SLOT	**MODULE**	**SOCKET (QTY)**			
0	1734-AENTR		24V DC ETHERNET ADAPTER		AB
1	1734-IB8S	1734-TOP3 (2)	AB INPUT F 8 SAFETY IN		AB
2	1734-IB8	1734-TB	AB INPUT STANDARD 8 STANDARD IN		AB
3	1734-OB8E	1734-TB	8 CHANNEL STANDARD OUT		AB
4	1734-OW4	1734-TB	RELAY MODULE 4 OUTPUT		AB
5	1734-IB8S	1734-TOP3 (2)	AB INPUT F 8 SAFETY OUT		AB
I/O GATE/LABYRINTH GROUP B					
6	1734-IB8S	1734-TOP3 (2)	AB INPUT F 8 SAFETY IN		AB
7	1734-IB8S	1734-TB	AB INPUT STANDARD 8 STAND OVRD IN		AB
8	1734-OW4	1734-TB	RELAY MOD OUT		AB
9	1734-0B8S	1734-TB	AB INPUT F 8 SAFETY IN		AB
I/O ID BEAMLINE GROUP B					
SLOT	**MODULE**	**SOCKET**			
0	1734-AENTR		24V DC ETHERNET ADAPTER		AB
1	1734-IB8S	1734-TOP3 (2)	AB INPUT F 8 SAFETY IN		AB
2	1734-IB8S	1734-TOP3 (2)	AB INPUT F 8 SAFETY IN		AB
	1734-EP24DC		24V DC BUSS EXT MOD.	REF #1	AB
3	1734-IB8S	1734-TB	AB INPUT STANDARD 8 STANDARD IN		AB
	1734-EP24DC		24V DC BUSS EXT MOD.	REF #2	AB
4	1734-IB8S	1734-TOP3 (2)	8 SAFETY OUT		AB
5	1734-OB8	1734-TB	8 CHANNEL STANDARD OUT		AB
I/O BM BEAMLINE GROUP B					
SLOT	**MODULE**	**SOCKET**			
0	1734-AENTR		24V DC ETHERNET ADAPTER		AB
1	1734-IB8S	1734-TOP3 (2)	AB INPUT F 8 SAFETY IN		AB
2	1734-IB8S	1734-TOP3 (2)	AB INPUT F 8 SAFETY IN		AB
	1734-EP24DC		24V DC BUSS EXT MOD.	REF #3	AB
3	1734-IB8S	1734-TB	AB INPUT STANDARD 8 STANDARD IN		AB
	1734-EP24DC		24V DC BUSS EXT MOD.	REF #4	AB
4	1734-OB8S	1734-TOP3 (2)	8 SAFETY OUT		AB
5	1734-OB8	1734-TB	8 CHANNEL STANDARD OUT		AB
TB28	4-2 COVER LARGE 3	1>2 1	4-2 COVER SMALL 4		
TB30	4-2 COVER LARGE 3	1>2 1	4-2 COVER SMALL 4	END CLAMP 5	

1	3044636
2	3044092
3	3047293
4	3047303
5	1201413
6	EPDDFL4U
7	3044542
8	DDFL-4U
9	3044076
10	3047028
11	3047170

LT-EL-SR-EI-PPS-0223-90

LT-EL-SR-EI (DRAWING DIRECTORY)	LT-EL-SR-EI-PPS-0223-90 (DRAWING NUMBER)	M (REV)
COMPUTER REPRODUCIBLE	SCALE: N/A	SHEET 62 OF 63

REV	DESCRIPTION	BY	DATE	CHK	APP
	SEE SHEET 1				

PPS I/O BOX TERMINAL LAYOUT TYPE 1

ROW 6					
TB16	END CLAMP 5	4-2 COVER LARGE 3	1>20 1	4-2 COVER SMALL 4	21 2
TB20	4-2 COVER LARGE 3	1>20 1	4-2 COVER SMALL 4	21 2	
TB22	4-2 COVER LARGE 3	1>20 1	4-2 COVER SMALL 4	21 2	
TB24	4-2 COVER LARGE 3	1>20 1	4-2 COVER SMALL 4	21 2	
TB26	4-2 COVER LARGE 3	1>5 1 / 6 7 / 7>15 1	4-2 COVER SMALL 4	21 2	
			USE BUSS JUMPER STRIPS 1>12 & 13>21		
SPACE FOR AUXILLARY DEVICE 1,A CHAIN		1.125"			
TB18	END CLAMP 5	4-2 COVER LARGE 3	1>6 1	4-2 COVER SMALL 4	END CLAMP 5
ROW 7 NOT INSTALLED					
TERMINALS					
FUSE 8	DDFL-4U	ALTECH			
FUSE PLATE 6	EPDDFL4U				
		PHOENIX CONTACT			
4 BUSSED 7	3044542	UT 2.5 QUATTRO	4 BUSSED		
4 BUSSED COVER 12	3047170				
1>15 1	3044636	UTTB 2.5	4 TERM 2 CONN		
	3047293				
4	3047303				
SINGLE 9	3044076		SINGLE		
SINGLE COVER 10	3047028				
GROUND 2	3044092				
END CLAMP 5	1201413				

1	3044636
2	3044092
3	3047293
4	3047303
5	1201413
6	EPDDFL4U
7	3044542
8	DDFL-4U
9	3044076
10	3047028
11	3047170

LT-EL-SR-EI-PPS-0223-90

LT-EL-SR-EI (DRAWING DIRECTORY)	LT-EL-SR-EI-PPS-0223-90 (DRAWING NUMBER)	M (REV)
COMPUTER REPRODUCIBLE	SCALE: N/A	SHEET 63 OF 63

The only official copy of this document is the one online in the NSLS-II Document and Records Center. Before using a printed copy, verify that it is current by checking the printed document's revision history log with that of the online version.

NSLS-II Beamline 23-ID Radiological Interlock Test Checklist

Test Reason: SSWP#1724 'B' Chain PLC Program Change - Installation of Vaccum switch #7 Line 1	Test Result: ☑ Passed ☐ Failed Test Type: ☐ Full Certification ☐ Annual ☑ Partial
Test Date: 8/23/2018	Start Time: Finish Time:
Tester 1: Thomas McDonald	Assistant 1: J. Sullivan, A. Mingino
Tester 2: Robert Chmiel	Assistant 2: T. Miller
Tester 1 Signature: Thomas A McDonald	Tester 2 Signature: R Chmiel
*Reviewer 1:	Reviewer 1 Signature:
Reviewer 2:	Reviewer 2 Signature:
** Safety Signature 23-ID (Beamline HMI) A Chain: 51F1 14A7 B Chain: 447D F7FA	Previous 23-ID SS# Date: 1/6/18 A Chain: 51F1 14A7 B Chain: 1D44 DA30
** Safety Signature Pentant 1 Beamline (SR HMI) A Chain: FCB1 FD92 B Chain: 2F26 A0FB	Previous Pentant 1 SS# Date: 1/6/18 A Chain: FCB1 FD92 B Chain: 2F26 A0FB

* A review by an Accelerator Safety Systems Engineer and a designated specialist (Reviewer 2) is only required upon a Test failure.
**If Current Safety Signature number (found in top left corner on HMI) is different from previous number, contact the Accelerator Safety Systems Cognizant Engineer.

PREPARATION:

I. All hutch door switches have been evaluated by NSLS-II Engineering for proper positioning	✓
II. Inform Control Room Lead Operator that testing will be done	✓
III. Obtain Beamline enable and PPS reset keys from Control Room	✓
IV. Verify that beamline vacuum and water interlocks are satisfied	✓
V. 23-ID Beamline Staff close isolation vacuum valves in preparation for vacuum sensor test steps	✓
VI. Place muffler on beam imminent sounder	NA
VII. Request Lead Operator enable Master Shutters	✓

- **Test steps highlighted in *Red (Ann)* will be performed during annual test of critical devices**
- **Test steps in *Red (Ann)* and *Blue* will be performed during Full Certifications**

A1 ***Verify System Lockouts (Ann)***

Gun HVPS Enable Switch ✓

Linac modulator line cords (3) OR Booster Dipole F PS 480 V ✓

Booster RF HVPS 480 V OR Booster low level RF drive termination ✓

SR System C low level RF drive termination OR SR System C RF output connection to cavity 480V T.M 8/23/18 ✓

SR System D low level RF drive termination OR SR System D RF output connection to cavity 480V T.M 8/23/18 ✓

A2 ***Verify Search and Time Beam Imminent Alarm***

Verify that search path is free from obstacles and line of sight is clear in search mirrors in accordance with NSLSII-ESH-PRC-032, *Beamline Enclosure Search and Secure and Breaking Security.* ___

The only official copy of this document is the one online in the NSLS-II Document and Records Center. Before using a printed copy, verify that it is current by checking the printed document's revision history log with that of the online version.

L1A1 Shutter Permits A and B ON (**green**)	___	___	___	___
Open Beamline Photon Shutter L1A1	___	___	___	___
L1A1 Shutter open (**green**)	___	___	___	___
Beamline Staff vents up section	___	___	___	___
Vacuum sensor SW A and B OFF	___	___	___	___
L1A1 Shutter Permits A and B OFF	___	___	___	___
L1A1 Shutter closed (**red**)	___	___	___	___
FE Critical Device Permits A and B ON	___	___	___	___
Open LIA1 and FE Shutters with test devices	___	___	___	___
LIA1 and FE Shutters open	___	___	___	___
FE Critical Devices A and B OFF	___	___	___	___
Close all Shutters and reset FE Critical Devices	___	___	___	___
Beamline Staff returns vacuum	___	___	___	___
L1A1 Shutter Permits A and B OFF	___	___	___	___
Reset fault	___	___	___	___
Vacuum sensor SW A and B ON (**green**)	___	___	___	___
L1A1 Shutter Permits A and B ON (**green**)	___	___	___	___
Open Beamline Photon Shutter L1A1	___	___	___	___
L1A1 Shutter open (**green**)	___	___	___	___

	SW5	**SW6**	**SW7**
Vacuum sensor SW A and B ON (**green**)	✓	✓	✓
L1A3 Shutter Permits A and B ON (**green**)	✓	✓	✓
Open Beamline Photon Shutter L1A3	✓	✓	✓
L1A3 Shutter open (**green**)	✓	✓	✓
Beamline Staff vents up section	✓	✓	✓
Vacuum sensor SW A and B OFF	✓	✓	✓
L1A3 Shutter Permits A and B OFF	✓	✓	✓
L1A3 Shutter closed (**red**)	✓	✓	✓
FE Critical Device Permits A and B ON	✓	✓	✓
Open L1A3, L1A1 and FE Shutters with test devices	✓	✓	✓
LIA3, L1A1 and FE Shutters open	✓	✓	✓

The only official copy of this document is the one online in the NSLS-II Document and Records Center. Before using a printed copy, verify that it is current by checking the printed document's revision history log with that of the online version.

FE Critical Devices A and B OFF	✓	✓	✓
Close all Shutters and reset FE Critical Devices	✓	✓	✓
Beamline Staff returns vacuum	✓	✓	✓
L1A3 Shutter Permits A and B OFF	✓	✓	✓
Reset fault	✓	✓	✓
Vacuum sensor SW A and B ON (**green**)	✓	✓	✓
L1A3 Shutter Permits A and B ON (**green**)	✓	✓	✓
Open Beamline Photon Shutter L1A3	✓	✓	✓
L1A3 Shutter open (**green**)	✓	✓	✓

A13 ***Vacuum Sensors Beamline 23-ID-2***

Qualified Beamline Staff will perform vacuum venting.

Perform steps for each vacuum sensor	**SW1**	**SW2**
Vacuum sensor SW A and B ON (**green**)	___	___
L2A2 Shutter Permits A and B ON (**green**)	___	___
Open Beamline Photon Shutter L2A2	___	___
L2A2 Shutter open (**green**)	___	___
Beamline Staff vents up section	___	___
Vacuum sensor SW A and B OFF	___	___
L2A2 Shutter Permits A and B OFF	___	___
L2A2 Shutter closed (**red**)	___	___
FE Critical Device Permits A and B ON	___	___
Open L2A2 and FE Shutters with test devices	___	___
L2A2 and FE Shutters open	___	___
FE Critical Devices A and B OFF	___	___
Close all Shutters and reset FE Critical Devices	___	___
Beamline Staff returns vacuum	___	___
L2A2 Shutter Permits A and B OFF	___	___
Reset fault	___	___
Vacuum sensor SW A and B ON (**green**)	___	___
L2A2 Shutter Permits A and B ON (**green**)	___	___
Open Beamline Photon Shutter L2A2	___	___
L2A2 Shutter open (**green**)	___	___

The only official copy of this document is the one online in the NSLS-II Document and Records Center. Before using a printed copy, verify that it is current by checking the printed document's revision history log with that of the online version.

A24 ***Test Completion (Ann)***

Inspect all hutch doors and labyrinths to ensure all PPS switch and Maglock actuators have been removed	✓
Return Beamline enable key and Beamline PPS reset key to the Control Room	✓
Remove muffler from beam imminent sounder	NA
Ensure PPS cabinets are secure and locked; challenge locks	✓
Remove all LOTO	Testing ongoing NA
Inform Lead Operator that testing is complete	✓

Y.M
8/23/18

REV	DESCRIPTION	BY	DATE	CHK	APP
A	INITIAL RELEASE	SEJ	10/22/2014	JM	SB
B	REVISED PER ECN LT-ECN-018-1978	SEJ	06/15/2018	JM	SB
C	REVISED PER ECN LT-ECN-018-2006	SEJ	7/25/2018	JM	SB

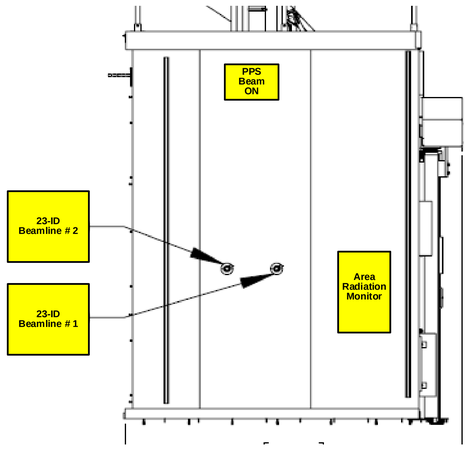

VIEW B-B

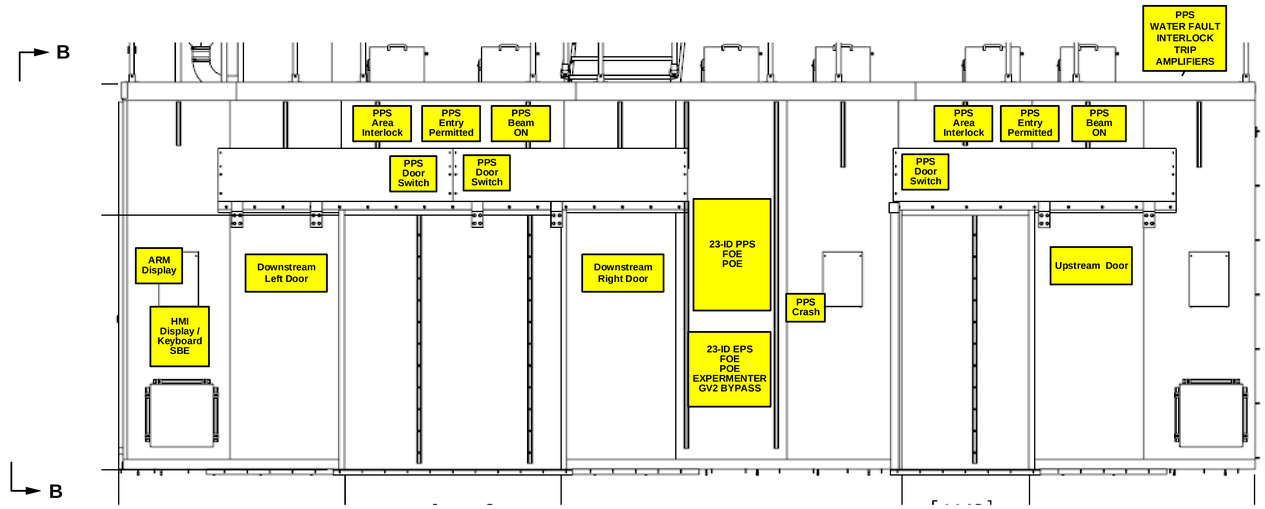

VIEW A-A

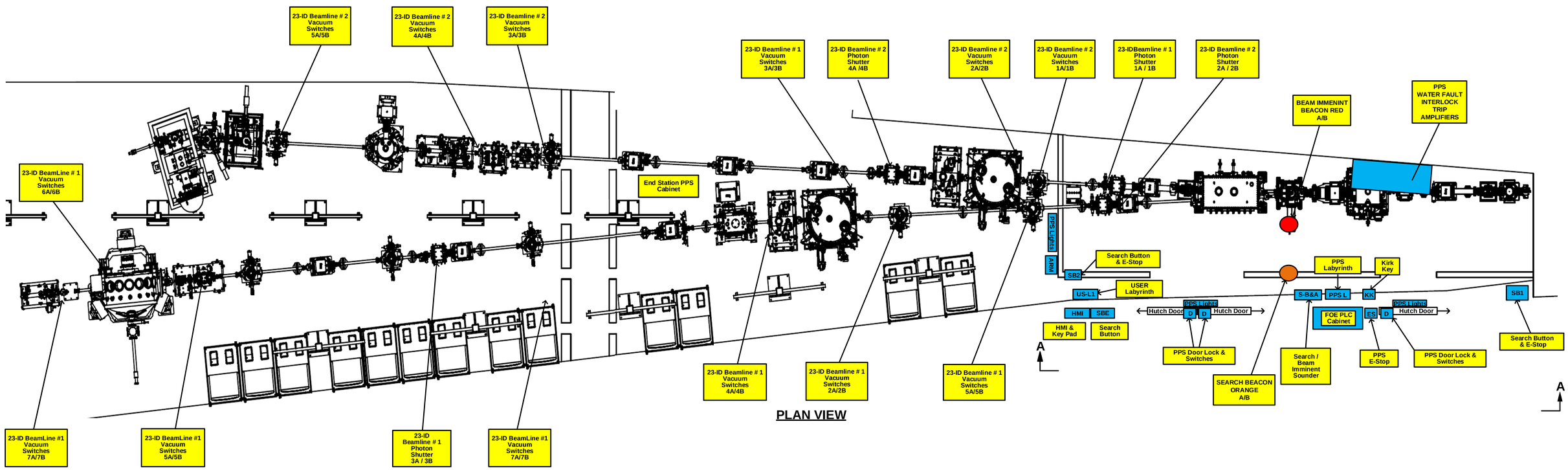

PLAN VIEW

D – PPS DOOR LOCKS AND SWITCHES
SB#- PPS SEARCH BUTTON AND EMERGENCY STOP
FOE – FORWARD OPTICAL ENCLOSURE
ARM – AREA RADATION MONITOR
PPS LIGHT – AREA INTERLOCKED (RED) ENTRY PERMITTED (GREEN) BEAM ON (RED)

BROOKHAVEN NATIONAL LABORATORY

BROOKHAVEN NATIONAL LABORATORY
BROOKHAVEN SCIENCE ASSOCIATES
UPTON, NEW YORK 11973
Exploring Life's Mysteries, Protecting its Future

NSLSII NATIONAL SYNCHROTRON LIGHT SOURCE II

UNLESS OTHERWISE SPECIFIED
INTEGER TOLERANCES ± .06
DECIMAL TOLERANCES
X ± .030
XX ± .015
XXX ± .010
ANGULAR TOLERANCE ± 0.5°
UNSPECIFIED RADII .02 MAX
125 BREAK SHARP CORNERS AND EDGES
FINISH MAX .03 MIN .005

UNLESS OTHERWISE SPECIFIED
DIMENSIONS ARE IN INCHES
DIMENSIONS IN [ ] ARE MILLIMETERS EQUIV. FOR REF. ONLY
INTERPRET DRAWING AS PER ANSI Y14.5 OR Y32.2

ESH&Q RISK LEVEL A-2

		DATE
DRWN BY	S. JARZABKOWSKI / A.SAJESWALD	10/22/2014
CHK BY	J. MALLEY	10/22/2014
ENG APP	S. BUDA	10/22/2014
SUPV APP	G. GANETIS	10/23/2014
QA APP	E. CHESWICK	10/23/2014
ESH APP	R. LEE	10/23/2014

OUTSTANDING ECN'S

JOB NUMBER | USED ON DWG. NO.

EQUIPMENT LAYOUT DRAWING FOR 23-ID HUTCH (CSX)

DRAWING DIRECTORY: LT-EL-BL-EI
DRAWING NUMBER: LT-EL-BL-EI-HCH-1230
REV: C

COMPUTER REPRODUCABLE
SCALE: N/A
SHEET 1 OF 1

LT-EL-BL-EI-HCH-1230

FIRMWARE/SOFTWARE/PROGRAMMING LOGIC

DESCRIPTION:

FRONT END PPS MAIN CPU PROGRAM PENTANT 1 A CHAIN

PROGRAM	**SIEMANS STEP 7**	
VERSION	**VERSION 5.5 + SP4**	
DEVICE	**SIEMENS CPU319F-3-PN/DP**	
OPERATING SYSTEM	**WINDOWS**	
PROGRAMMING METHOD	**LADDER LANGUAGE**	
FILE		

REV	DESCRIPTION	BY	DATE	CHK	APP
A	INITIAL RELEASE	MP	12/15/14	JM	SB
B	REVISED PER ECN# 015-1111	MP	02/09/15	JM	SB
C	REVISED PER ECN# 015-1289	MP	10/09/15	JM	SB
D	REVISED PER ECN# 018-1869	MP	12/18/18	JM	SB

LT-EL-BL-EI-PPS-0101-70

BROOKHAVEN NATIONAL LABORATORY

BROOKHAVEN NATIONAL LABORATORY
BROOKHAVEN SCIENCE ASSOCIATES
UPTON, NEW YORK 11973
Exploring Life's Mysteries, Protecting its Future

NSLS II
NATIONAL SYNCHROTRON LIGHT SOURCE II

UNLESS OTHERWISE SPECIFIED
INTEGER TOLERANCES
± .06
DECIMAL TOLERANCES
.X ± .030
.XX ± .015
.XXX ± .010
ANGULAR TOLERANCE ± 0.5°
UNSPECIFIED RADII .02 MAX
125 BREAK SHARP CORNERS AND EDGES
FINISH MAX .03 MIN .005

UNLESS OTHERWISE SPECIFIED
DIMENSIONS ARE IN INCHES
DIMENSIONS IN [.**] ARE
MILLIMETERS EQUIV. FOR REF. ONLY

INTERPRET DRAWING AS PER
ANSI Y14.5 OR Y32.2

ESH&Q RISK LEVEL A-1

OUTSTANDING ECN'S

		DATE
DRWN BY	S.BUDA	12/15/14
CHK BY	M.PFEFFER	12/15/14
ENG APP	S.BUDA	12/15/14
SUPV APP	G.GANETIS	01/07/15
QA APP	E.CHESWICK	12/15/14
ESH APP	B.LEE	12/16/14

PROGRAMMABLE LOGIC

NSLS-II-PENTANT 1 FRONT END PPS CPU A CHAIN

LT-EL-BR-IN — DRAWING DIRECTORY
LT-EL-BL-EI-PPS-0101-70 — DRAWING NUMBER
D — REV

COMPUTER REPRODUCIBLE
SCALE: N/A
SHEET 1 OF 1

JOB NUMBER
USED ON DWG. NO.

FIRMWARE/SOFTWARE/PROGRAMMING LOGIC

DESCRIPTION:

FRONT END PPS MAIN CPU PROGRAM PENTANT 1 B CHAIN

PROGRAM	**RS LOGIX 5000**	
VERSION	**20.03**	
DEVICE	**ALLEN BRADLEY 1768-L43S**	
OPERATING SYSTEM	**WINDOWS**	
PROGRAMMING METHOD	**ETHERNET**	
FILE	**LT-EL-BL-EI-PPS-0101-80-E.ACD**	

REV	DESCRIPTION	BY	DATE	CHK	APP
A	INITIAL RELEASE	SB	10/23/14	MP	SB
B	REVISED PER ECN# 015-1108	SB	02/05/15	MP	SB
C	REVISED PER ECN# 015-1211	SB	06/30/15	MP	SB
D	REVISED PER ECN# 015-1302	SB	10/09/15	MP	SB
E	REVISED PER ECN# 018-1879	SB	12/20/17	MP	SB

LT-EL-BL-EI-PPS-0101-80

BROOKHAVEN NATIONAL LABORATORY

BROOKHAVEN NATIONAL LABORATORY
BROOKHAVEN SCIENCE ASSOCIATES
UPTON, NEW YORK 11973
Exploring Life's Mysteries, Protecting its Future

NSLS II
NATIONAL SYNCHROTRON LIGHT SOURCE II

UNLESS OTHERWISE SPECIFIED
INTEGER TOLERANCES
± .06
DECIMAL TOLERANCES
.X ± .030
.XX ± .015
.XXX ± .010
ANGULAR TOLERANCE ± 0.5°
UNSPECIFIED RADII .02 MAX
125 BREAK SHARP CORNERS AND EDGES
FINISH MAX .03 MIN .005

UNLESS OTHERWISE SPECIFIED DIMENSIONS ARE IN INCHES DIMENSIONS IN [*.**] ARE MILLIMETERS EQUIV. FOR REF. ONLY

ESH&Q RISK LEVEL A-1

INTERPRET DRAWING AS PER ANSI Y14.5 OR Y32.2

		DATE	OUTSTANDING ECN'S
DRWN BY	S.BUDA	10/23/14	
CHK BY	M.PFEFFER	11-17-14	
ENG APP	S.BUDA	11-17-14	
SUPV APP	G.GANETIS	12-01-14	
QA APP	E.CHESWICK	11-19-14	
ESH APP	B.LEE	11-20-14	

PROGRAMMABLE LOGIC

NSLS-II-FRONT END PPS MAIN CPU PROGRAM PENTANT 1 B CHAIN

LT-EL-BL-IN	LT-EL-BL-EI-PPS-0101-80	E
DRAWING DIRECTORY	DRAWING NUMBER	REV

COMPUTER REPRODUCIBLE | SCALE: N/A | SHEET 1 OF 1

JOB NUMBER	USED ON DWG. NO.

FIRMWARE/SOFTWARE/PROGRAMMING LOGIC

DESCRIPTION:

23-ID A CHAIN BEAMLINE PPS PLC PROGRAM

PROGRAM	**SIEMENS TIA PORTAL**	
VERSION	**VERSION 13 + SP1**	
DEVICE	**SIEMENS IM151-8-F CPU**	
OPERATING SYSTEM	**WINDOWS**	
PROGRAMMING METHOD	**LADDER LOGIC**	
FILE	**NSLS II Beamline_ID23 Rev F**	
	51F114A7	

REV	DESCRIPTION	BY	DATE	CHK	APP
A	INITIAL RELEASE	SB	10/21/14	MP	SB
B	REVISED PER ECN# 015-1114	MP	02/09/15	JM	SB
C	REVISED PER ECN# 015-1250	MP	10/19/15	JM	SB
D	REVISED PER ECN# 016-1487	MP	05/16/16	JM	SB
E	REVISED PER ECN# 017-1715	MP	01/06/17	JM	SB
F	REVISED PER ECN# 018-1870	MP	12/18/17	JM	SB

LT-EL-BL-EI-PPS-1230-70

BROOKHAVEN NATIONAL LABORATORY

BROOKHAVEN NATIONAL LABORATORY
BROOKHAVEN SCIENCE ASSOCIATES
UPTON, NEW YORK 11973
Exploring Life's Mysteries, Protecting its Future

NSLS II
NATIONAL SYNCHROTRON LIGHT SOURCE II

UNLESS OTHERWISE SPECIFIED
INTEGER TOLERANCES ± .06
DECIMAL TOLERANCES
.X ± .030
.XX ± .015
.XXX ± .010
ANGULAR TOLERANCE ± 0.5°
UNSPECIFIED RADII .02 MAX
125 BREAK SHARP CORNERS AND EDGES
FINISH MAX .03 MIN .005

UNLESS OTHERWISE SPECIFIED DIMENSIONS ARE IN INCHES DIMENSIONS IN [*.**] ARE MILLIMETERS EQUIV. FOR REF. ONLY

ESH&Q RISK LEVEL A-1

INTERPRET DRAWING AS PER ANSI Y14.5 OR Y32.2

		DATE	OUTSTANDING ECN'S
DRWN BY	S.BUDA	10/21/14	
CHK BY	M.PFEFFER	10/21/14	
ENG APP	S.BUDA	10/21/14	
SUPV APP	G.GANETIS	10/23/14	
QA APP	E.CHESWICK	10/22/14	
ESH APP	B.LEE	10/22/14	

PROGRAMMABLE LOGIC
NSLS-II A CHAIN BEAMLINE PPS
PLC PROGRAM (23-ID)

LT-EL-BL-EI	LT-EL-BL-EI-PPS-1230-70	F
DRAWING DIRECTORY	DRAWING NUMBER	REV

COMPUTER REPRODUCIBLE | SCALE: N/A | SHEET 1 OF 1

JOB NUMBER	USED ON DWG. NO.

FIRMWARE/SOFTWARE/PROGRAMMING LOGIC

DESCRIPTION:

23-ID B CHAIN BEAMLINE PPS PLC PROGRAM

PROGRAM	**RSLOGIX 5000**	
VERSION	**20.03**	
DEVICE	**ALLEN BRADLEY 1768-L43S**	
OPERATING SYSTEM	**WINDOWS**	
PROGRAMMING METHOD	**ETHERNET**	
FILE	**LT_EL_BL_EI_PPS_0223_71_E.ACD**	

REV	DESCRIPTION	BY	DATE	CHK	APP
A	INITIAL RELEASE	SB	10/21/14	MP	SB
B	REVISED PER ECN# 015-1105	SB	10/21/14	MP	SB
C	REVISED PER ECN# 015-1269	SB	10/19/15	MP	SB
D	REVISED PER ECN# 018-1872	SB	01/16/18	MP	SB
E	REVISED PER ECN# 018-1897	SB	08/21/18	MP	SB

LT-EL-BL-EI-PPS-1230-71

BROOKHAVEN NATIONAL LABORATORY

BROOKHAVEN NATIONAL LABORATORY
BROOKHAVEN SCIENCE ASSOCIATES
UPTON, NEW YORK 11973
Exploring Life's Mysteries, Protecting its Future

NSLS II
NATIONAL SYNCHROTRON LIGHT SOURCE II

UNLESS OTHERWISE SPECIFIED
INTEGER TOLERANCES ± .06
DECIMAL TOLERANCES
.X ± .030
.XX ± .015
.XXX ± .010
ANGULAR TOLERANCE ± 0.5°
UNSPECIFIED RADII .02 MAX
125 FINISH — BREAK SHARP CORNERS AND EDGES
MAX .03 MIN .005

UNLESS OTHERWISE SPECIFIED DIMENSIONS ARE IN INCHES
DIMENSIONS IN [*.**] ARE MILLIMETERS EQUIV. FOR REF. ONLY

ESH&Q RISK LEVEL A-1

INTERPRET DRAWING AS PER ANSI Y14.5 OR Y32.2

		DATE
DRWN BY	S.BUDA	10/21/14
CHK BY	M.PFEFFER	10/21/14
ENG APP	S.BUDA	10/21/14
SUPV APP	G.GANETIS	10/23/14
QA APP	E.CHESWICK	10/22/14
ESH APP	B.LEE	10/22/14

OUTSTANDING ECNS •

PROGRAMMABLE LOGIC
NSLS-II B CHAIN BEAMLINE PPS
PLC PROGRAM (23-ID)

LT-EL-BL-EI — DRAWING DIRECTORY
LT-EL-BL-EI-PPS-1230-71 — DRAWING NUMBER
E — REV

COMPUTER REPRODUCIBLE
SCALE: N/A
SHEET 1 OF 1

JOB NUMBER
USED ON DWG. NO.