REVISION HISTORY					
REV	DESCRIPTION	DATE	DESIGNER	CHECKED BY	ENGINEER
A	INITIAL RELEASE PER ECO-001334	4/2013	Y. KOH	C. AMARITO	G. LOMBARDO
B	REVISED PER ECO-001530	4/2013	Y. KOH	C. AMARITO	G. LOMBARDO
C	REVISED PER ECO-002106	6/2014	R. MASTERSON	J. MOYA	J. MOYA
D	REVISED PER ECO-002437	7/2014	R. MASTERSON	J. MOYA	J. MOYA
E	REVISED PER ECO-003677	1/2016	B.J.M.	C.A./C.S.	R. O'BRIEN
F	REVISED PER ECO-005171	7/2017	B.J.M./W.T.	C.A./M.L.	R. O'BRIEN
G	REVISED PER ECO-005627	9/2018	B.J.M.	R. GAMBELLA	R. O'BRIEN

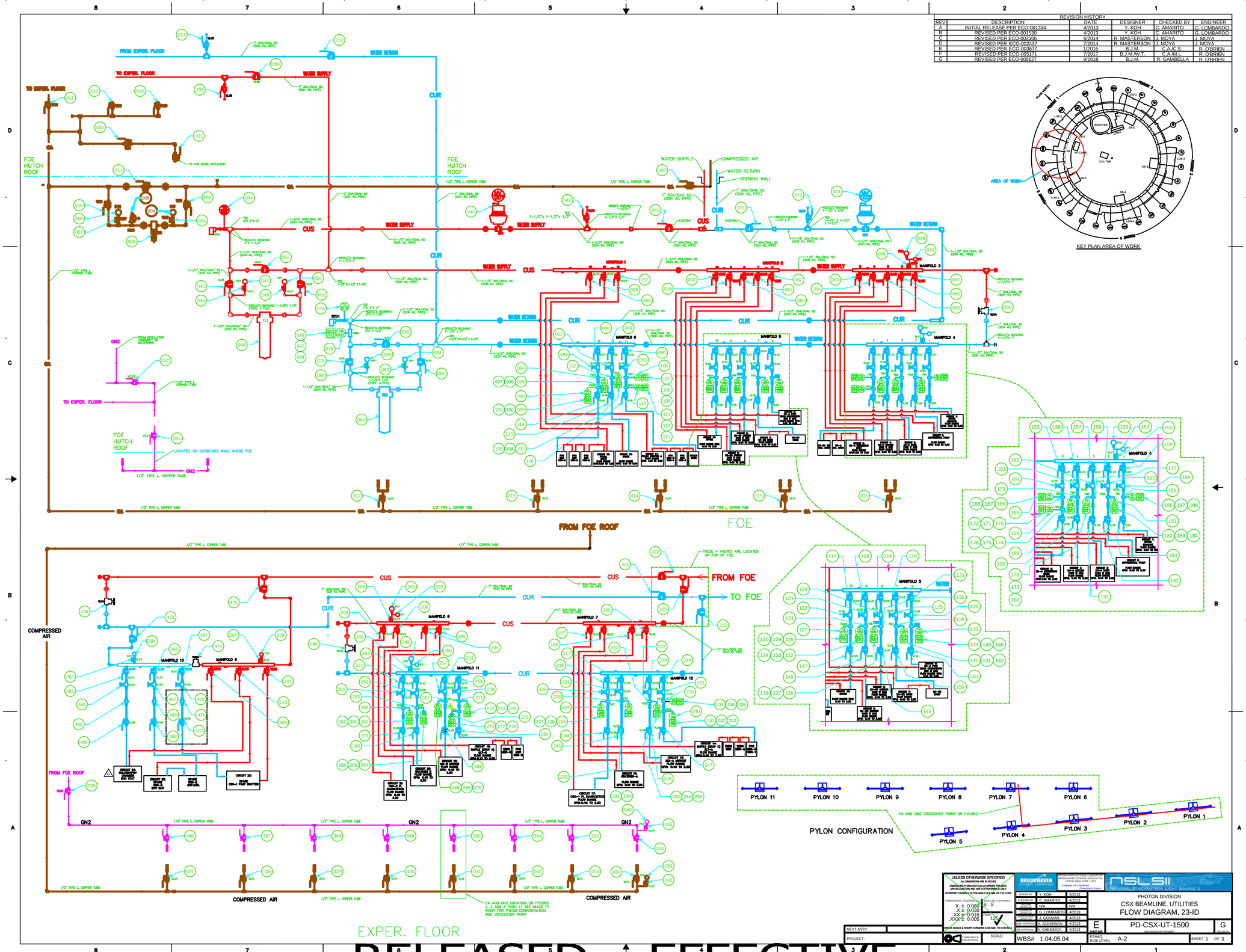

UNLESS OTHERWISE SPECIFIED
ALL DIMENSIONS ARE IN INCHES
DIMENSIONS IN BRACKETS [in.xx] [MM(PE PRESENT)] ARE MILLIMETERS AND ARE FOR REFERENCE ONLY
INTERPRET DRAWING AS PER ANSI Y14.5-1994 OR YS12-1975
DIMENSIONAL TOLERANCE: X ± 0.060, .X ± 0.030, .XX ± 0.015, .XXX ± 0.005
ANGULAR TOLERANCE: ± .5°, 12μ
BREAK EDGES & SHARP CORNERS 0.005 MIN. TO 0.030 MAX.
THIRD ANGLE PROJECTION

BROOKHAVEN NATIONAL LABORATORY
BROOKHAVEN NATIONAL LABORATORY
PO BOX 5000, BUILDING 725
UPTON, NEW YORK 11973
Exploring Life's Mysteries, Protecting Its Future

NSLS II NATIONAL SYNCHROTRON LIGHT SOURCE II

DRAWN BY	Y. KOH	4/2013
CHECKED BY	C. AMARITO	4/2013
DESIGNER	N/A	N/A
ENGINEER	G. LOMBARDO	4/2013
SUPERVISOR	J. GORMAN	4/2013
SUB APPROVAL	A. ACKERMAN	4/2013
QA APPROVAL	E. CHESWICK	4/2013

PHOTON DIVISION
CSX BEAMLINE, UTILITIES
FLOW DIAGRAM, 23-ID

E — PD-CSX-UT-1500 — G
SHEET NO. — DRAWING NUMBER — REVISION

NEXT ASSY:
PROJECT:
SCALE:
WBS# 1.04.05.04
ESH&Q RISK LEVEL A-2
SHEET 1 OF 3

RELEASED – EFFECTIVE

PIPE IDENTIFICATION LABEL FORMAT			
SYSTEM	LABEL TEXT	LABEL FIELD COLOR	COLOR OF LETTERS
COMPRESSED AIR	COMPRESSED AIR	BLUE	WHITE
PROCESS CHILLED WATER	PROCESS CHILLED WATER SUPPLY PROCESS CHILLED WATER RETURN	GREEN	WHITE
PRIMARY CHILLED WATER	PRIMARY CHILLED WATER SUPPLY PRIMARY CHILLED WATER RETURN	GREEN	WHITE
INSTRUMENT WATER	INSTRUMENT WATER SUPPLY INSTRUMENT WATER RETURN	GREEN	WHITE
COPPER SKID DE-IONIZED WATER	COPPER DI SUP COPPER DI RET	GREEN	WHITE
GASEOUS NITROGEN	GASEOUS NITROGEN	PURPLE	WHITE

TAG LEGEND	
BEAMLINE LOCATION	
BEAMLINE NO.	1BM/1ID THROUGH 30BM/30ID
HUTCH DESIGNATION	A = HUTCH A (FOE) B = HUTCH B C = HUTCH C D = HUTCH D F = FLOOR MOUNTED R = HUTCH ROOF MOUNTED (FOR PCHWS & PCHWR DEVICES SERVING EQUIPMENT RACKS)
DEVICE TYPE	
ABBREVIATION	DEVICE
AV	AIR VENT
DPS	DIFFERENTIAL SENSOR
FL	FILTER
FM	FLOW METER
PG	PRESSURE GAUGE
PRG	PRESSURE REGULATOR
PRV	PRESSURE RELIEF VALVE
MV	MOTORIZED VALVE
TI	TEMPERATURE INDICATOR
TS	TEMPERATURE SENSOR
VLV	MANUAL VALVE
SYSTEM DESIGNATION	
ABBREVIATION	SYSTEM
CA	COMPRESSED AIR
PCHWS	PROCESS CHILLED WATER SUPPLY
PCHWR	PROCESS CHILLED WATER RETURN
CHWS	PRIMARY CHILLED WATER SUPPLY
CHWR	PRIMARY CHILLED WATER RETURN
CUS	COPPER SKID DE-IONIZED WATER SUPPLY
CUR	COPPER SKID DE-IONIZED WATER RETURN
GN2	GASEOUS NITROGEN
LN2	LIQUID NITROGEN

TAG FORMAT

10IDA-PCHWS-VLV-1001

- 4-DIGIT SEQUENTIAL NUMBER STARTING AT 1001
- DEVICE TAG ABBREVIATION (SEE LEGEND)
- SYSTEM ABBREVIATION (SEE LEGEND)
- HUTCH DESIGNATION
- 4-DIGIT BEAMLINE IDENTIFICATION

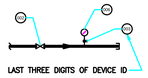

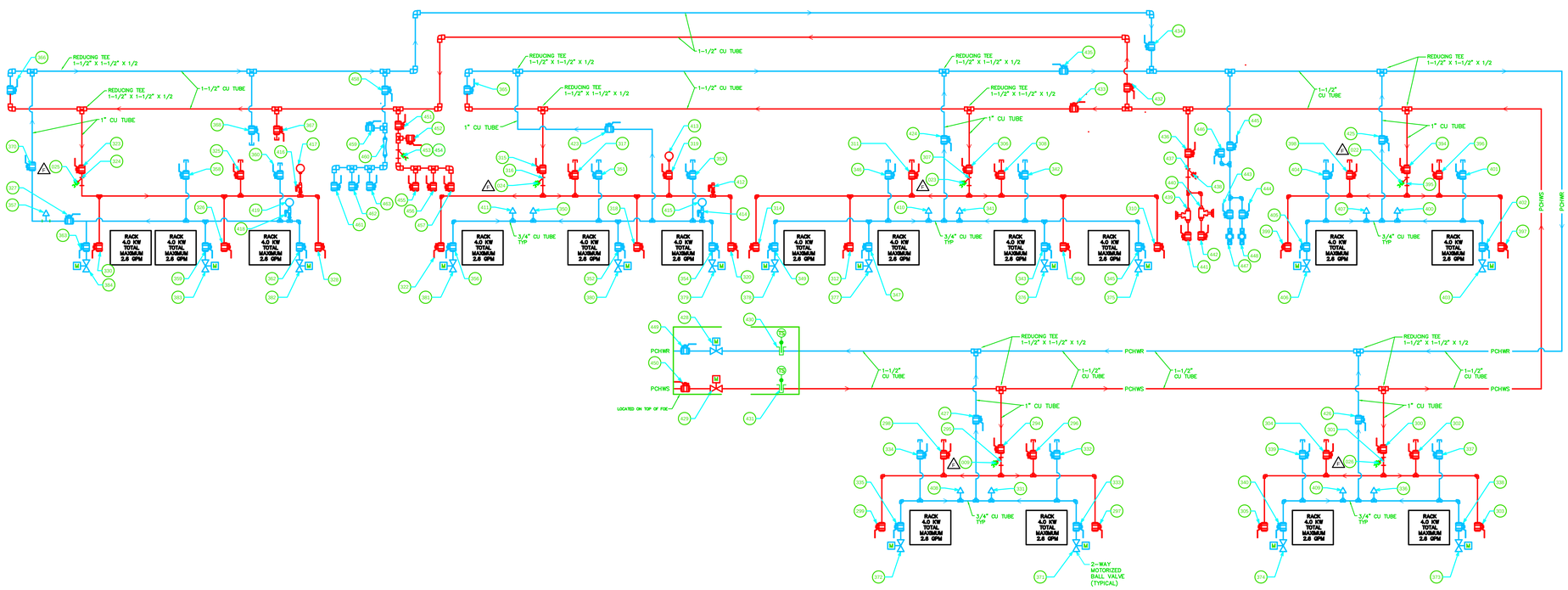

E	PD-CSX-UT-1500	G
SIZE	DRAWING/PART NUMBER	REVISION
ESH&Q RISK LEVEL A-2	SHEET 2 OF 3	

RELEASED – EFFECTIVE

BEAMLINE CSX 23-ID MECHANICAL UTILITIES

DRAWING ID	DEVICE ID	COMMENT
1001	NOT USED	
1002	23ID A - CA - VLV - 1002	
1003	23ID A - CA - VLV - 1003	
1004	23ID A - CA - PG - 1004	
1005	23ID A - CA - FL - 1005	
1006	23ID A - CA - PRV - 1006	
1007	23ID A - CA - VLV - 1007	
1008	23ID A - CA - PG - 1008	
1009	23ID F - PCHWS - VLV - 1009	△F
1010	23ID A - CA - VLV - 1010	
1011	23ID A - CA - VLV - 1011	
1012	23ID A - CA - VLV - 1012	
1013	23ID A - CA - VLV - 1013	
1014	23ID A - CA - VLV - 1014	
1015	23ID A - CA - VLV - 1015	
1016	23ID A - CA - VLV - 1016	
1017	23ID A - CA - VLV - 1017	
1018	23ID R - CA - VLV - 1018	
1019	23ID R - CA - VLV - 1019	
1020	23ID R - CA - VLV - 1020	
1021	23ID R - CA - VLV - 1021	
1022	23ID F - PCHWS - VLV - 1022	△F
1023	23ID F - PCHWS - VLV - 1023	△F
1024	23ID F - PCHWS - VLV - 1024	△F
1025	23ID F - PCHWS - VLV - 1025	△F
1026	23ID F - PCHWS - VLV - 1026	△F
1027	23ID B - CA - VLV - 1027	
1028	23ID B - CA - VLV - 1028	
1029	23ID B - CA - VLV - 1029	
1030	23ID B - CA - VLV - 1030	
1031	23ID B - CA - VLV - 1031	
1032	23ID B - CA - VLV - 1032	
1033	23ID B - CA - VLV - 1033	
1034	23ID B - CA - VLV - 1034	
1035	23ID B - CA - VLV - 1035	
1036	23ID B - CA - PG - 1036	
1037	23ID A - GN2 - VLV - 1037	
1038	23ID A - GN2 - VLV - 1038	
1039	23ID A - GN2 - VLV - 1039	
1040	23ID A - GN2 - PG - 1040	
1041	23ID A - CUS - VLV - 1041	
1042	23ID A - CUS - VLV - 1042	
1043	23ID A - CUS - MV - 1043	
1044	23ID A - CUS - TS - 1044	
1045	23ID A - CUS - VLV - 1045	
1046	23ID A - CUS - VLV - 1046	
1047	23ID A - CUS - PG - 1047	
1048	23ID A - CUS - FL - 1048	
1049	23ID A - CUS - VLV - 1049	
1050	23ID A - CUS - PG - 1050	
1051	23ID A - CUS - VLV - 1051	
1052	23ID A - CUS - VLV - 1052	
1053	NOT USED	
1054	NOT USED	
1055	23ID A - CUS - VLV - 1055	
1056	23ID A - CUS - VLV - 1056	
1057	23ID A - CUS - VLV - 1057	
1058	23ID A - CUS - VLV - 1058	
1059	23ID A - CUS - VLV - 1059	
1060	23ID A - CUS - VLV - 1060	
1061	23ID A - CUS - VLV - 1061	
1062	23ID A - CUS - VLV - 1062	
1063	23ID A - CUS - VLV - 1063	
1064	23ID A - CUS - VLV - 1064	
1065	23ID A - CUS - VLV - 1065	
1066	23ID A - CUS - VLV - 1066	
1067	23ID A - CUS - VLV - 1067	
1068	23ID A - CUS - VLV - 1068	
1069	23ID A - CUS - PG - 1069	
1070	23ID A - CUS - PT - 1070	
1071	23ID A - CUR - VLV - 1071	
1072	23ID A - CUR - VLV - 1072	
1073	23ID A - CUR - VLV - 1073	
1074	23ID A - CUR - TS - 1074	
1075	23ID A - CUR - FM - 1075	
1076	23ID A - CUR - DPS - 1076	
1077	23ID A - CUR - VLV - 1077	LOCATED ON HUTCH ROOF
1078	23ID A - CUR - VLV - 1078	LOCATED ON HUTCH ROOF
1079	23ID A - CUR - VLV - 1079	
1080	23ID A - CUR - VLV - 1080	
1081	23ID A - CUR - PG - 1081	
1082	23ID A - CUR - FL - 1082	
1083	23ID A - CUR - VLV - 1083	
1084	23ID A - CUR - PG - 1084	
1085	23ID A - CUR - VLV - 1085	
1086	NOT USED	
1087	NOT USED	
1088	23ID A - CUR - VLV - 1088	
1089	23ID A - CUR - VLV - 1089	
1090	23ID A - CUR - VLV - 1090	
1091	23ID A - CUR - VLV - 1091	
1092	23ID A - CUR - VLV - 1092	
1093	23ID A - CUR - VLV - 1093	
1094	23ID A - CUR - FM - 1094	
1095	23ID A - CUR - DPS - 1095	
1096	23ID A - CUR - VLV - 1096	LOCATED ON HUTCH ROOF
1097	23ID A - CUR - VLV - 1097	LOCATED ON HUTCH ROOF
1098	23ID A - CUR - FM - 1098	
1099	23ID A - CUR - DPS - 1099	
1100	23ID A - CUR - VLV - 1100	LOCATED ON HUTCH ROOF
1101	23ID A - CUR - VLV - 1101	LOCATED ON HUTCH ROOF
1102	23ID A - CUR - FM - 1102	
1103	23ID A - CUR - DPS - 1103	
1104	23ID A - CUR - VLV - 1104	LOCATED ON HUTCH ROOF
1105	23ID A - CUR - VLV - 1105	LOCATED ON HUTCH ROOF
1106	23ID A - CUR - FM - 1106	
1107	23ID A - CUR - DPS - 1107	
1108	23ID A - CUR - VLV - 1108	LOCATED ON HUTCH ROOF
1109	23ID A - CUR - VLV - 1109	LOCATED ON HUTCH ROOF
1110	23ID A - CUR - FM - 1110	
1111	23ID A - CUR - DPS - 1111	
1112	23ID A - CUR - VLV - 1112	LOCATED ON HUTCH ROOF
1113	23ID A - CUR - VLV - 1113	LOCATED ON HUTCH ROOF
1114	23ID A - CUR - VLV - 1114	
1115	23ID A - CUR - VLV - 1115	
1116	23ID A - CUR - VLV - 1116	
1117	23ID A - CUR - VLV - 1117	
1118	23ID A - CUR - VLV - 1118	
1119	23ID A - CUR - VLV - 1119	
1120	23ID A - CUR - VLV - 1120	
1121	23ID A - CUR - VLV - 1121	
1122	23ID A - CUR - VLV - 1122	
1123	23ID A - CUR - VLV - 1123	
1124	23ID A - CUR - VLV - 1124	
1125	23ID A - CUR - VLV - 1125	
1126	23ID A - CUR - VLV - 1126	
1127	23ID A - CUR - FM - 1127	
1128	23ID A - CUR - DPS - 1128	
1129	23ID A - CUR - VLV - 1129	LOCATED ON HUTCH ROOF
1130	23ID A - CUR - VLV - 1130	LOCATED ON HUTCH ROOF
1131	23ID A - CUR - FM - 1131	
1132	23ID A - CUR - DPS - 1132	
1133	23ID A - CUR - VLV - 1133	LOCATED ON HUTCH ROOF
1134	23ID A - CUR - VLV - 1134	LOCATED ON HUTCH ROOF
1135	23ID A - CUR - FM - 1135	
1136	23ID A - CUR - DPS - 1136	
1137	23ID A - CUR - VLV - 1137	LOCATED ON HUTCH ROOF
1138	23ID A - CUR - VLV - 1138	LOCATED ON HUTCH ROOF
1139	23ID A - CUR - FM - 1139	
1140	23ID A - CUR - DPS - 1140	
1141	23ID A - CUR - VLV - 1141	LOCATED ON HUTCH ROOF
1142	23ID A - CUR - VLV - 1142	LOCATED ON HUTCH ROOF
1143	23ID A - CUR - FM - 1143	
1144	23ID A - CUR - DPS - 1144	
1145	23ID A - CUR - VLV - 1145	LOCATED ON HUTCH ROOF
1146	23ID A - CUR - VLV - 1146	LOCATED ON HUTCH ROOF
1147	23ID A - CUR - VLV - 1147	
1148	23ID A - CUR - VLV - 1148	
1149	23ID A - CUR - VLV - 1149	
1150	23ID A - CUR - VLV - 1150	
1151	23ID A - CUR - VLV - 1151	
1152	23ID A - CUR - VLV - 1152	
1153	23ID A - CUR - PG - 1153	
1154	23ID A - CUR - PT - 1154	
1155	23ID A - CUR - VLV - 1155	
1156	23ID A - CUR - VLV - 1156	
1157	23ID A - CUR - VLV - 1157	
1158	23ID A - CUR - VLV - 1158	
1159	23ID A - CUR - VLV - 1159	
1160	23ID A - CUR - VLV - 1160	
1161	23ID A - CUR - VLV - 1161	
1162	23ID A - CUR - VLV - 1162	
1163	23ID A - CUR - VLV - 1163	
1164	23ID A - CUR - VLV - 1164	
1165	23ID A - CUR - FM - 1165	
1166	23ID A - CUR - DPS - 1166	
1167	23ID A - CUR - VLV - 1167	LOCATED ON HUTCH ROOF
1168	23ID A - CUR - VLV - 1168	LOCATED ON HUTCH ROOF
1169	23ID A - CUR - FM - 1169	
1170	23ID A - CUR - DPS - 1170	
1171	23ID A - CUR - VLV - 1171	LOCATED ON HUTCH ROOF
1172	23ID A - CUR - VLV - 1172	LOCATED ON HUTCH ROOF
1173	23ID A - CUR - FM - 1173	
1174	23ID A - CUR - DPS - 1174	
1175	23ID A - CUR - VLV - 1175	LOCATED ON HUTCH ROOF
1176	23ID A - CUR - VLV - 1176	LOCATED ON HUTCH ROOF
1177	23ID A - CUR - FM - 1177	
1178	23ID A - CUR - DPS - 1178	
1179	23ID A - CUR - VLV - 1179	LOCATED ON HUTCH ROOF
1180	23ID A - CUR - VLV - 1180	LOCATED ON HUTCH ROOF
1181	23ID A - CUR - FM - 1181	
1182	23ID A - CUR - DPS - 1182	
1183	23ID A - CUR - VLV - 1183	LOCATED ON HUTCH ROOF
1184	23ID A - CUR - VLV - 1184	LOCATED ON HUTCH ROOF
1185	23ID A - CUR - FM - 1185	
1186	23ID A - CUR - DPS - 1186	
1187	23ID A - CUR - VLV - 1187	LOCATED ON HUTCH ROOF
1188	23ID A - CUR - VLV - 1188	LOCATED ON HUTCH ROOF
1189	23ID A - CUR - VLV - 1189	
1190	23ID A - CUR - VLV - 1190	
1191	23ID A - CUR - VLV - 1191	
1192	23ID A - CUR - VLV - 1192	
1193	23ID A - CUR - VLV - 1193	
1194	23ID A - CUS - VLV - 1194	
1195	23ID A - CUS - VLV - 1195	
1196	NOT USED	
1197	23ID B - CUS - VLV - 1197	
1198	23ID B - CUS - VLV - 1198	
1199	23ID B - CUS - VLV - 1199	
1200	23ID B - CUS - VLV - 1200	
1201	23ID B - CUS - PG - 1201	
1202	23ID B - CUS - PT - 1202	
1203	23ID B - CUS - VLV - 1203	
1204	23ID B - CUS - VLV - 1204	
1205	23ID B - CUS - VLV - 1205	
1206	23ID B - CUS - VLV - 1206	
1207	23ID B - CUS - VLV - 1207	
1208	23ID B - CUS - PG - 1208	
1209	23ID B - CUS - VLV - 1209	
1210	23ID B - CUS - VLV - 1210	
1211	23ID B - CUS - VLV - 1211	
1212	23ID A - CUR - VLV - 1212	
1213	23ID A - CUR - VLV - 1213	
1214	23ID A - CUR - VLV - 1214	
1215	NOT USED	
1216	23ID B - CUR - VLV - 1216	
1217	23ID B - CUR - VLV - 1217	
1218	23ID B - CUR - VLV - 1218	
1219	23ID B - CUR - VLV - 1219	
1220	23ID B - CUR - VLV - 1220	
1221	23ID B - CUR - VLV - 1221	
1222	23ID B - CUR - VLV - 1222	
1223	23ID B - CUR - VLV - 1223	
1224	23ID B - CUR - FM - 1224	
1225	23ID B - CUR - DPS - 1225	
1226	23ID B - CUR - VLV - 1226	
1227	23ID B - CUR - VLV - 1227	
1228	23ID B - CUR - FM - 1228	
1229	23ID B - CUR - DPS - 1229	
1230	23ID B - CUR - VLV - 1230	
1231	23ID B - CUR - VLV - 1231	
1232	23ID B - CUR - FM - 1232	
1233	23ID B - CUR - DPS - 1233	
1234	23ID B - CUR - VLV - 1234	
1235	23ID B - CUR - VLV - 1235	
1236	23ID B - CUR - FM - 1236	
1237	23ID B - CUR - DPS - 1237	
1238	23ID B - CUR - VLV - 1238	
1239	23ID B - CUR - VLV - 1239	
1240	23ID B - CUR - FM - 1240	
1241	23ID B - CUR - DPS - 1241	
1242	23ID B - CUR - VLV - 1242	
1243	23ID B - CUR - VLV - 1243	
1244	23ID B - CUR - VLV - 1244	
1245	23ID B - CUR - VLV - 1245	
1246	23ID B - CUR - VLV - 1246	
1247	23ID B - CUR - VLV - 1247	
1248	23ID B - CUR - VLV - 1248	
1249	23ID B - CUR - PG - 1249	
1250	23ID B - CUR - PT - 1250	
1251	23ID B - CUR - VLV - 1251	
1252	23ID B - CUR - VLV - 1252	
1253	23ID B - CUR - VLV - 1253	
1254	23ID B - CUR - VLV - 1254	
1255	23ID B - CUR - VLV - 1255	
1256	23ID B - CUR - VLV - 1256	
1257	23ID B - CUR - VLV - 1257	
1258	23ID B - CUR - VLV - 1258	
1259	23ID B - CUR - FM - 1259	
1260	23ID B - CUR - DPS - 1260	
1261	23ID B - CUR - VLV - 1261	
1262	23ID B - CUR - VLV - 1262	
1263	23ID B - CUR - FM - 1263	
1264	23ID B - CUR - DPS - 1264	
1265	23ID B - CUR - VLV - 1265	
1266	23ID B - CUR - VLV - 1266	
1267	23ID B - CUR - FM - 1267	
1268	23ID B - CUR - DPS - 1268	
1269	23ID B - CUR - VLV - 1269	
1270	23ID B - CUR - VLV - 1270	
1271	23ID B - CUR - FM - 1271	
1272	23ID B - CUR - DPS - 1272	
1273	23ID B - CUR - VLV - 1273	
1274	23ID B - CUR - VLV - 1274	
1275	23ID B - CUR - FM - 1275	
1276	23ID B - CUR - DPS - 1276	
1277	23ID B - CUR - VLV - 1277	
1278	23ID B - CUR - VLV - 1278	
1279	23ID B - CUR - VLV - 1279	
1280	23ID B - CUR - VLV - 1280	
1281	23ID B - CUR - VLV - 1281	
1282	23ID B - CUR - VLV - 1282	
1283	23ID B - CUR - VLV - 1283	
1284	23ID B - CUR - PG - 1284	
1285	23ID B - CUR - VLV - 1285	
1286	23ID B - CUR - VLV - 1286	
1287	23ID B - CUR - VLV - 1287	
1288	23ID A - CUS - VLV - 1288	
1289	23ID B - CUS - VLV - 1289	
1290	23ID B - CUS - VLV - 1290	
1291	23ID A - CUS - VLV - 1291	
1292	23ID A - CUR - VLV - 1292	
1293	NOT USED	
1294	23ID F - PCHWS - VLV - 1294	
1295	23ID F - PCHWS - STR - 1295	
1296	23ID F - PCHWS - VLV - 1296	
1297	23ID F - PCHWS - VLV - 1297	
1298	23ID F - PCHWS - VLV - 1298	
1299	23ID F - PCHWS - VLV - 1299	
1300	23ID F - PCHWS - VLV - 1300	
1301	23ID F - PCHWS - VLV - 1301	
1302	23ID F - PCHWS - VLV - 1302	
1303	23ID F - PCHWS - VLV - 1303	
1304	23ID F - PCHWS - VLV - 1304	
1305	23ID F - PCHWS - VLV - 1305	
1306	23ID F - PCHWS - VLV - 1306	
1307	23ID F - PCHWS - VLV - 1307	
1308	23ID F - PCHWS - VLV - 1308	
1309	NOT USED	
1310	23ID F - PCHWS - VLV - 1310	
1311	23ID F - PCHWS - VLV - 1311	
1312	23ID F - PCHWS - VLV - 1312	
1313	NOT USED	
1314	23ID F - PCHWS - VLV - 1314	
1315	23ID F - PCHWS - VLV - 1315	
1316	23ID F - PCHWS - VLV - 1316	
1317	23ID F - PCHWS - VLV - 1317	
1318	23ID F - PCHWS - VLV - 1318	
1319	23ID F - PCHWS - VLV - 1319	
1320	23ID F - PCHWS - VLV - 1320	
1321	NOT USED	
1322	23ID F - PCHWS - VLV - 1322	
1323	23ID F - PCHWS - VLV - 1323	
1324	23ID F - PCHWS - VLV - 1324	
1325	23ID F - PCHWS - VLV - 1325	
1326	23ID F - PCHWS - VLV - 1326	
1327	23ID F - PCHWR - VLV - 1327	
1328	23ID F - PCHWS - VLV - 1328	
1329	NOT USED	
1330	23ID F - PCHWS - VLV - 1330	
1331	23ID F - PCHWR - VLV - 1331	
1332	23ID F - PCHWR - VLV - 1332	
1333	23ID F - PCHWR - VLV - 1333	
1334	23ID F - PCHWR - VLV - 1334	
1335	23ID F - PCHWR - VLV - 1335	
1336	23ID F - PCHWR - VLV - 1336	
1337	23ID F - PCHWR - VLV - 1337	
1338	23ID F - PCHWR - VLV - 1338	
1339	23ID F - PCHWR - VLV - 1339	
1340	23ID F - PCHWR - VLV - 1340	
1341	23ID F - PCHWR - VLV - 1341	
1342	23ID F - PCHWR - VLV - 1342	
1343	23ID F - PCHWR - VLV - 1343	
1344	NOT USED	
1345	23ID F - PCHWR - VLV - 1345	
1346	23ID F - PCHWR - VLV - 1346	
1347	23ID F - PCHWR - VLV - 1347	
1348	NOT USED	
1349	23ID F - PCHWR - VLV - 1349	
1350	23ID F - PCHWR - VLV - 1350	
1351	23ID F - PCHWR - VLV - 1351	
1352	23ID F - PCHWR - VLV - 1352	
1353	23ID F - PCHWR - VLV - 1353	
1354	23ID F - PCHWR - VLV - 1354	
1355	NOT USED	
1356	23ID F - PCHWR - VLV - 1356	
1357	23ID F - PCHWR - VLV - 1357	
1358	23ID F - PCHWR - VLV - 1358	
1359	23ID F - PCHWR - VLV - 1359	
1360	23ID F - PCHWR - VLV - 1360	
1361	23ID F - PCHWR - VLV - 1361	
1362	23ID F - PCHWR - VLV - 1362	
1363	23ID F - PCHWR - VLV - 1363	
1364	23ID F - PCHWS - VLV - 1364	
1365	23ID F - PCHWS - VLV - 1365	
1366	23ID R - PCHWS - VLV - 1366	
1367	23ID R - PCHWS - VLV - 1367	
1368	23ID R - PCHWR - VLV - 1368	
1369	NOT USED	
1370	23ID R - PCHWR - VLV - 1370	
1371	23ID R - PCHWR - MV - 1371	
1372	23ID R - PCHWR - MV - 1372	
1373	23ID R - PCHWR - MV - 1373	
1374	23ID R - PCHWR - MV - 1374	
1375	23ID R - PCHWR - MV - 1375	
1376	23ID R - PCHWR - MV - 1376	
1377	23ID R - PCHWR - MV - 1377	
1378	23ID R - PCHWR - MV - 1378	
1379	23ID R - PCHWR - MV - 1379	
1380	23ID R - PCHWR - MV - 1380	
1381	23ID R - PCHWR - MV - 1381	
1382	23ID R - PCHWR - MV - 1382	
1383	23ID R - PCHWR - MV - 1383	
1384	23ID R - PCHWR - MV - 1384	
1385	23ID R - GN2 - VLV - 1385	
1386	23ID B - GN2 - VLV - 1386	
1387	23ID B - GN2 - VLV - 1387	
1388	23ID B - GN2 - VLV - 1388	
1389	23ID B - GN2 - VLV - 1389	
1390	23ID B - GN2 - VLV - 1390	
1391	23ID B - GN2 - VLV - 1391	
1392	23ID B - GN2 - VLV - 1392	
1393	23ID B - GN2 - VLV - 1393	
1394	23ID R - PCHWS - VLV - 1394	
1395	23ID R - PCHWS - STR - 1395	
1396	23ID R - PCHWS - VLV - 1396	
1397	23ID R - PCHWS - VLV - 1397	
1398	23ID R - PCHWS - VLV - 1398	
1399	23ID R - PCHWS - VLV - 1399	
1400	23ID R - PCHWR - AV - 1400	
1401	23ID R - PCHWR - VLV - 1401	
1402	23ID R - PCHWR - VLV - 1402	
1403	23ID R - PCHWR - MV - 1403	
1404	23ID R - PCHWR - VLV - 1404	
1405	23ID R - PCHWR - VLV - 1405	
1406	23ID R - PCHWR - MV - 1406	
1407	23ID R - PCHWR - AV - 1407	
1408	23ID R - PCHWR - AV - 1408	
1409	23ID R - PCHWR - AV - 1409	
1410	23ID R - PCHWR - AV - 1410	
1411	23ID R - PCHWR - AV - 1411	
1412	23ID R - PCHWR - VLV - 1412	
1413	23ID R - PCHWR - PG - 1413	
1414	23ID R - PCHWR - VLV - 1414	
1415	23ID R - PCHWR - PG - 1415	
1416	23ID R - PCHWR - VLV - 1416	
1417	23ID R - PCHWR - PG - 1417	
1418	23ID R - PCHWR - VLV - 1418	
1419	23ID R - PCHWR - PG - 1419	
1420	23ID A - CA - VLV - 1420	
1421	23ID R - CUR - VLV - 1421	
1422	23ID R - CUS - VLV - 1422	
1423	23ID R - PCHWR - VLV - 1423	
1424	23ID R - PCHWR - VLV - 1424	
1425	23ID R - PCHWR - VLV - 1425	
1426	23ID R - PCHWR - VLV - 1426	
1427	23ID R - PCHWR - VLV - 1427	
1428	23ID R - PCHWR - MV - 1428	
1429	23ID R - PCHWS - MV - 1429	
1430	23ID R - PCHWR - TS - 1430	
1431	23ID R - PCHWS - TS - 1431	
1432	23ID F - PCHWS - VLV - 1432	
1433	23ID F - PCHWS - VLV - 1433	
1434	23ID F - PCHWR - VLV - 1434	
1435	23ID F - PCHWR - VLV - 1435	
1436	23ID F - PCHWS - VLV - 1436	
1437	23ID F - PCHWS - STR - 1437	
1438	23ID F - PCHWS - VLV - 1438	
1439	23ID F - PCHWS - VLV - 1439	
1440	23ID F - PCHWS - VLV - 1440	
1441	23ID F - PCHWS - VLV - 1441	
1442	23ID F - PCHWS - VLV - 1442	
1443	23ID F - PCHWR - VLV - 1443	
1444	23ID F - PCHWR - VLV - 1444	
1445	23ID R - PCHWR - VLV - 1445	
1446	23ID R - PCHWR - VLV - 1446	
1447	23ID F - PCHWR - FM - 1447	
1448	23ID F - PCHWR - FM - 1448	
1449	23ID R - PCHWR - VLV - 1449	
1450	23ID R - PCHWS - VLV - 1450	
1451	23ID F - PCHWS - VLV - 1451	
1452	23ID F - PCHWS - VLV - 1452	
1453	23ID F - PCHWS - STR - 1453	
1454	23ID F - PCHWS - VLV - 1454	
1455	23ID F - PCHWS - VLV - 1455	
1456	23ID F - PCHWS - VLV - 1456	
1457	23ID F - PCHWS - VLV - 1457	
1458	23ID F - PCHWR - VLV - 1458	
1459	23ID F - PCHWR - VLV - 1459	
1460	23ID F - PCHWR - FM - 1460	
1461	23ID F - PCHWR - VLV - 1461	
1462	23ID F - PCHWR - VLV - 1462	
1463	23ID F - PCHWR - VLV - 1463	
1464	23ID F - CUR - VLV - 1464	
1465	23ID F - CUR - FM - 1465	
1466	23ID F - CUR - VLV - 1466	
1467	23ID F - CUR - VLV - 1467	
1468	23ID F - CUR - FM - 1468	
1469	23ID F - CUR - VLV - 1469	
1470	23ID F - CUR - VLV - 1470	
1471	23ID F - CUR - FM - 1471	
1472	23ID F - CUR - VLV - 1472	
1473	23ID F - CUR - VLV - 1473	
1474	23ID F - CUR - VLV - 1474	
1475	23ID F - CUS - VLV - 1475	
1476	NOT USED - 1476	
1477	NOT USED - 1477	
1478	NOT USED - 1478	
1479	NOT USED - 1479	
1480	NOT USED - 1480	
1481	NOT USED - 1481	
1482	NOT USED - 1482	
1483	NOT USED - 1483	
1484	NOT USED - 1484	
1485	NOT USED - 1485	△G
1486	NOT USED - 1486	△G
1487	NOT USED - 1487	△G
1488	NOT USED - 1488	△G
1489	NOT USED - 1489	△G
1490	NOT USED - 1490	△G

SHEET SIZE	DRAWING/PART NUMBER	REVISION
E	PD-CSX-UT-1500	G
ESH&Q RISK LEVEL	A-2	SHEET 3 OF 3

RELEASED – EFFECTIVE