MECHANICAL UTILITIES TEST REPORT

THIS SECTION TO BE COMPLETED BY COGNIZANT ENGINEER

PREPARED BY: D. BACESCU LIFE #: 24708 DATE: 9/07/2018

TEST LOCATION: BLDG 741, LAB. 06 APPLICABLE DRAWING(S): PD-CSX-ES-0514

ATTACHMENT (Y) / N (CIRCLE ONE)

DESCRIPTION OF COMPONENT/SYSTEM:
CSX BEAMLINE HOLOGRAPHY END STATION
COOLING BLOCK BRAZING ASSY.

MAXIMUM ALLOWABLE WORKING PRESSURE (PSIG) OF COMPONENT/SYSTEM:
150 PSIG

MECHANICAL UTILITY SYSTEM (MARK AN "X" ON ALL THAT APPLY):

PRIMARY DI WATER ☐ SECONDARY DI WATER ☐ ALUMINUM DI WATER ☐

PROCESS CHILLED WATER ☐ COMPRESSED AIR ☐ GASEOUS NITROGEN ☐ OTHER ☒

IF 'OTHER' IS SELECTED, DESCRIBE THE SYSTEM:
TESTING PUMP - ROTHENBERGER RP50-S

TEST GAUGE INFORMATION:

RANGE: 0-860 UNIT OF MEASUREMENT: PSIG

SERIAL NUMBER: 09161716 CALIBRATION DUE DATE: _____

OPERATIONS CONDUCTED (SELECT ALL THAT APPLY):

LEAK TEST ☒ FLUSH ☐ HYDROSTATIC PRESSURE TEST ☒ PNEUMATIC PRESSURE TEST ☐

OTHER ☐

IF 'OTHER' IS SELECTED, DESCRIBE THE OPERATION: _____

MECHANICAL UTILITIES TEST REPORT – PAGE 2

LEAK TEST:

THIS SECTION TO BE COMPLETED BY COGNIZANT ENGINEER

TEST FLUID: H_2O FLUID TEMPERATURE 68 °F FLUID PRESSURE: 150 PSIG

METHOD USED (VISUAL, SOAP BUBBLES, VACUUM, ETC.): VISUAL

TEST DURATION SHALL BE AS LONG AS REQUIRED TO EVALUATE POTENTIAL LEAK POINTS

THIS SECTION TO BE COMPLETED BY QUALIFIED TECHNICIAN

CONDUCTED BY: D. BACESCU DATE: 9/07/2018

RECORD ACTUAL LEAK TEST DURATION HERE: 30 min

NO LEAKAGE PRESENT ☒ SIGNATURE: Bacescu

FLUSH:

THIS SECTION TO BE COMPLETED BY COGNIZANT ENGINEER

FLUSH FLUID: _____ FLUID TEMPERATURE _____ °F FLUID PRESSURE: _____ PSIG

FLUSH DURATION: _____ MINUTES/HOURS (CIRCLE ONE)

FLUSH PARAMETERS: _____

_____ (WRITE "N/A" IF NONE APPLY)

THIS SECTION TO BE COMPLETED BY QUALIFIED TECHNICIAN

CONDUCTED BY: _____ DATE: _____

COMMENTS:

_____

_____

ACCEPTABLE ☐ SIGNATURE: _____

PRESSURE TEST:

THIS SECTION TO BE COMPLETED BY COGNIZANT ENGINEER

TYPE: HYDROSTATIC ☒ PNEUMATIC ☐ TEST FLUID: H_2O FLUID TEMPERATURE 68 °F

SPECIFIED STARTING PRESSURE: 0 ***PSIG*** ***SPECIFIED MAXIMUM TEST PRESSURE:*** 150 ***PSIG***

SPECIFIED PRESSURE AND TIME INCREMENTS: N/A ***PSIG/MINUTES***

SPECIFIED MAXIMUM TEST PRESSURE DURATION: 30 ***MINUTES (10 MINUTES MINIMUM)***

MECHANICAL UTILITIES TEST REPORT – PAGE 3

PRESSURE TEST (CONTINUED):

THIS SECTION TO BE COMPLETED BY QUALIFIED TECHNICIAN

CONDUCTED BY: D. BACESCU DATE: 9/07/2018

ENVIRONMENTAL FACTORS (OPTIONAL): TEMPERATURE 70 °F RELATIVE HUMIDITY _____ %

PRESSURE TEST DATA TO BE COMPLETED DURING TEST			
SPECIFIED PRESSURE	ACTUAL PRESSURE	SPECIFIED PRESSURE	ACTUAL PRESSURE
150 PSIG	150 PSIG		

PRESSURE TEST ACCEPTABLE ☒ TECHNICIAN SIGNATURE/LIFE NUMBER: Joseph Dell 21622

WITNESS SIGNATURE/LIFE NUMBER: Wen Hu 25406

OTHER:

THIS SECTION TO BE COMPLETED BY COGNIZANT ENGINEER

DETAILED DESCRIPTION OF OPERATION (ATTACHMENT Y / N):

_____

_____

_____

TEST FLUID: _____ FLUID TEMPERATURE _____ °F FLUID PRESSURE: _____ PSIG

THIS SECTION TO BE COMPLETED BY QUALIFIED TECHNICIAN

CONDUCTED BY: _____ DATE: _____

ENVIRONMENTAL FACTORS (OPTIONAL): TEMPERATURE _____ °F RELATIVE HUMIDITY _____ %

				%
SPECIFIED	ACTUAL	SPECIFIED	ACTUAL	VARIANCE

MECHANICAL UTILITIES TEST REPORT – PAGE 4

OTHER (CONTINUED):

THIS SECTION TO BE COMPLETED BY QUALIFIED TECHNICIAN

NOTES:

THIS SECTION TO BE COMPLETED BY COGNIZANT ENGINEER

NOTES:

TEST ACCEPTABLE ☐

TECHNICIAN SIGNATURE/LIFE NUMBER: _____

WITNESS SIGNATURE/LIFE NUMBER: _____

REVISION HISTORY					
REV	DESCRIPTION	DATE	DESIGNER	CHECKED BY	ENGINEER
A	RELEASE PER ECO-005527	07/2018	A.DESANTIS	R. GAMBELLA	D.BACESCU

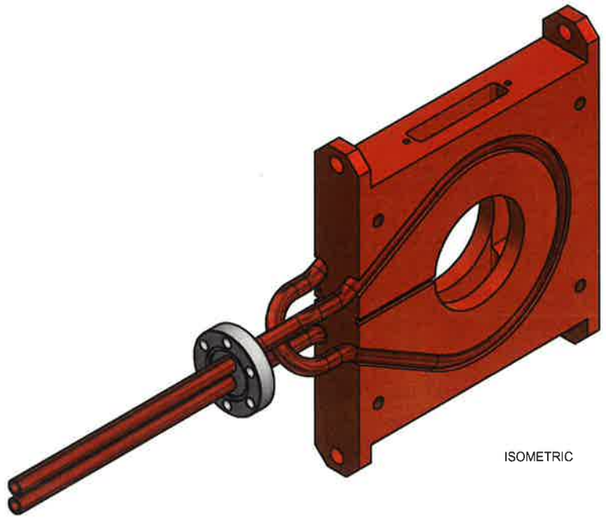

ISOMETRIC

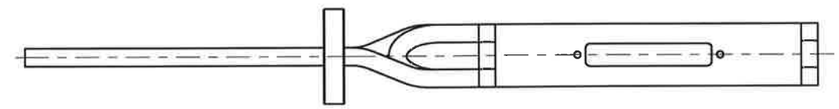

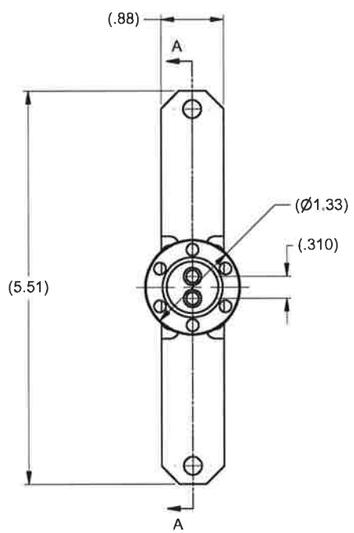

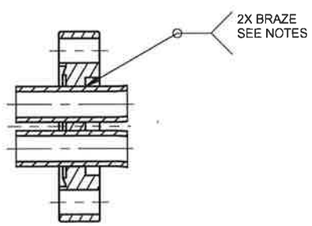

SECTION A-A
VIEW CROPPED
SCALE 2 : 1

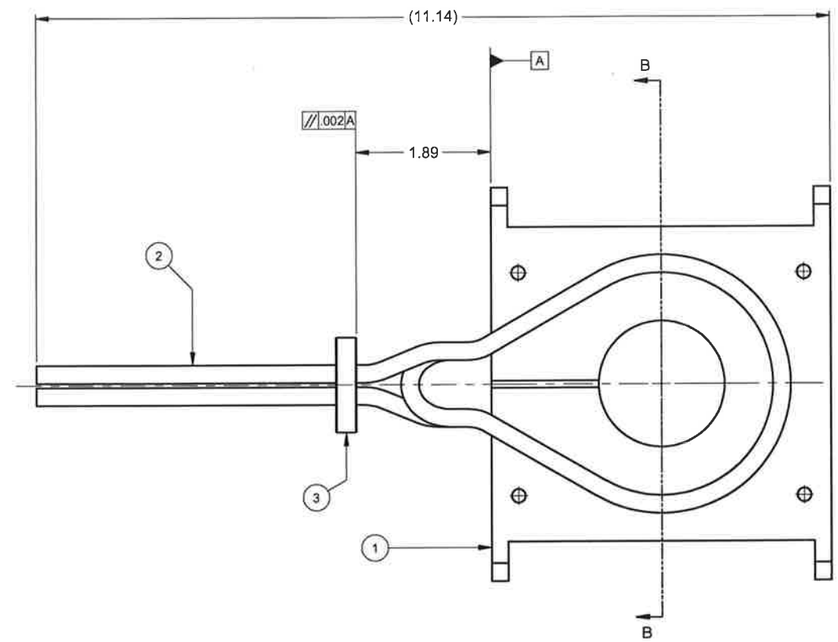

SCALE 1 : 1

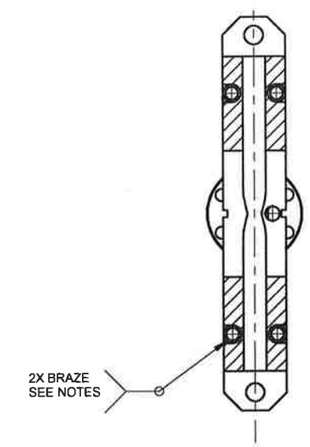

SECTION B-B
SCALE 1 : 1

NOTES:

1. ALL JOINTS TO BE HYDROGEN FURNACED BRAZED VACUUM TIGHT (VT). ALL JOINTS SHALL USE 50% Au 50% Cu FILLER METAL. ALL JOINTS MUST PASS A HELIUM LEAK TEST OF 2 x 10^{-10} std cc/sec He. TOTAL LEAK RATE NOT TO EXCEED 1 x 10^{-9} std cc/sec He.
2. PRESSURE TEST ALL COOLING CHANNELS FOR 10 bar FOR 10 MINUTES.
3. ALL BRAZING JOINTS SHALL HAVE ADEQUATE FILLER METAL TO PROVIDE A FLUSH, SMOOTH FILLET FREE FROM VOIDS, BLOW HOLES, ETC., AND THERE SHALL BE NO VISIBLE EVIDENCE OF INCLUSION.
4. MAINTAIN BRAZING PROCEDURES AND INSPECTION RECORDS.
5. FINISHED ASSY MUST BE FREE OF PARTICLES AND CHEMICAL FILM ON ALL INNER SURFACES AND ON FLANGE FACES.
6. ITEM IDENTIFICATION: TAG WITH PART NUMBER AND APPLICABLE REV. LTR.

ITEM	QTY	PART NUMBER	DESCRIPTION	MATERIAL
3	1	PD-CSX-ES-1103	FLANGE, COOLING PORT	STAINLESS STEEL
2	1	PD-CSX-ES-1102	TUBING, COOLING BLOCK	COPPER, OFHC PER UNS C10100
1	1	PD-CSX-ES-1101	BLOCK, COOLING	COPPER, OFHC PER ASTM B152

PARTS LIST

UNLESS OTHERWISE SPECIFIED
ALL DIMENSIONS ARE IN INCHES
DIMENSIONS IN BRACKETS [xx.xx] (WHERE PRESENT) ARE MILLIMETERS AND ARE FOR REFERENCE ONLY
INTERPRET DRAWING AS PER ASME Y14.5-2009

DIMENSIONAL TOLERANCES	ANGULAR TOLERANCE
X. ± 0.060	± .5°
.X ± 0.030	
.XX ± 0.015	FINISH 125
.XXX ± 0.005	

BREAK EDGES & SHARP CORNERS 0.005 MIN. TO 0.030 MAX.

THIRD ANGLE PROJECTION

SCALE: SEE DWG VIEW

BROOKHAVEN NATIONAL LABORATORY
BROOKHAVEN SCIENCE ASSOCIATES
UPTON, NEW YORK 11973
Exploring Life's Mysteries
Protecting its Future

NSLSII NATIONAL SYNCHROTRON LIGHT SOURCE II

DRAWN BY	A.DESANTIS	6/11/2018
CHECKED BY	R.GAMBELLA	07/2018
VACUUM APPROVAL		
ENGINEER APPROVAL	D. BACESCU	07/2018
SUPERVISOR APPROVAL	C. MAZZOLI	07/2018
ESH APPROVAL	L. STIEGLER	07/2018
QA APPROVAL	J. ZIPPER	07/2018

PHOTON DIVISION
CSX, END STATION
COOLING BLOCK BRAZING ASSY

D — PD-CSX-ES-0514 — A
DRAWING/PART NUMBER — REVISION

WBS# 4.3.2.10

ESH&Q RISK LEVEL A3

SHEET 1 OF 1

NEXT ASSY: PD-CSX-ES-0510

C:\Mech-Eng\LT\PD\CSX\ES\PD-CSX-ES-0514.idw

RELEASED + EFFECTIVE