Holography Endstation at Coherent soft x-ray scattering Beamline, CSX (23-ID-1)

IRR Functional Description

Contents

1 INTRODUCTION 3

1.1 Primary Research Capabilities 3

1.2 Beamline Staff 3

2 HOLOGRAPHY ENDSTATION DESIGN AND COMPONENTS 4

2.1 Holography Endstation Layout 4

2.2 Holography setup 4

3 BEAMLINE SAFETY CREDITED CONTROL 7

3.1 Radiation Shielding 7

3.2 Radiation Safety Components & Radiation Management 7

3.3 Personnel Protection System (PPS) 7

3.4 Equipment Protection System (EPS) 7

3.5 Utilities 7

3.6 Controls 8

1 INTRODUCTION

1.1 Primary Research Capabilities

The new holography endstation at the Coherent soft x-ray scattering (CSX, 23ID1) beamline will provide holographhpy imaging capabilities at NSLS-II. It will serve a national and international community to study magnetic materials as a function of temperature and magnetic field with sub-10 nm resolution, but not limited to magnetic materials.

The holography chamber is the second endstation of CSX. This new endstation offer researchers soft x-ray holography imaging technique with world-leading coherent high photon flux for investigating the magnetic materials. It offers researchers a 2D fast detector (Berkeley fast CCD, up to 100 Hz) in transmission geometry. The fast CCD detector has X-Y-Z motion and it offers an adjustable sample-detector distance along beam direction. An in-vacuum electro-magnet is installed and offers static magnetic field up to 0.7 T. Up to 4 samples can be mounted on a sample board at a time. As an option, high frequency pulsed electrical field can be applied to sample (up to 18 GHz), and sample can be cooled or headed by thermalelectroics moudual on sample board. The final version of sample board is still under development.

1.2 Beamline Staff

LEAD BEAMLINE SCIENTIST	CLAUDIO MAZZOLI
AUTHORIZED BEAMLINE STAFF	WEN HU STUART WILKINS
BEAMLINE SUPPORTING STAFF	DANIEL BACESCU (MECHANICAL ENGINEER) JOHN SINSHEIMER (CONTROL ENGINEER) ANDREW MINGINO (TECHNICIAN)

2 HOLOGRAPHY ENDSTATION DESIGN AND COMPONENTS

2.1 Holography Endstation Layout

The layout of 23ID beamlines in shown in figure 1 and the holography endstation located at the end of CSX beamline (23ID1). The new holography chamber connected to the end of current CSX beamline downstream TARDIS end station. Schematic drawing of the CSX holography chamber and a photo of assembled CSX holography chamber are shown in figure 2. This holography chamber is based on an 8” 5-way cross, top port is connected with a manipulator for sample transfer, upstream port is connected to the end of current beamline, downstream port is connected to fast CCD camera in transmission geometry, two side-ports are for in-vacuum magnet installation and a Pfeiffer HiPace 400 turbo molecular pump (TMP). The support frame of the chamber was originally used for support of gas cell at CSX and modified for supporting this new endstation.

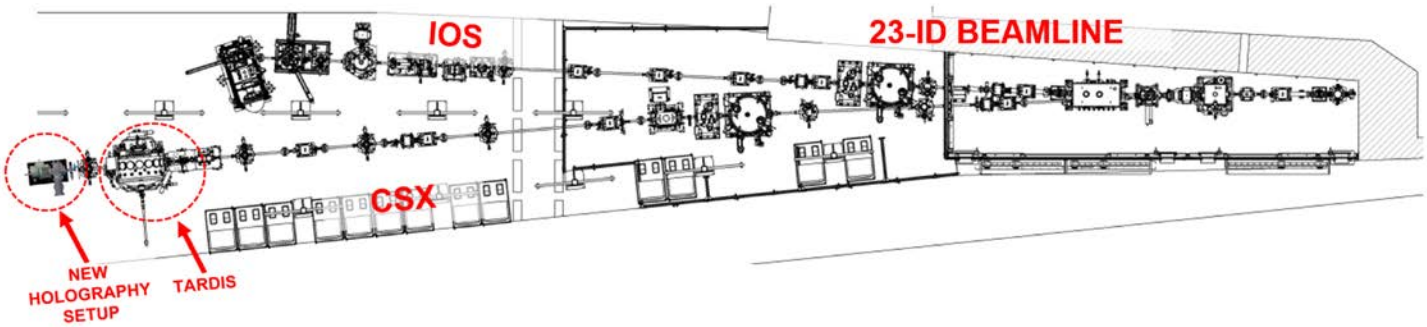

Figure 1. The layout of 23ID beamlines and the holography endstation located at the end of CSX beamline (23ID1).

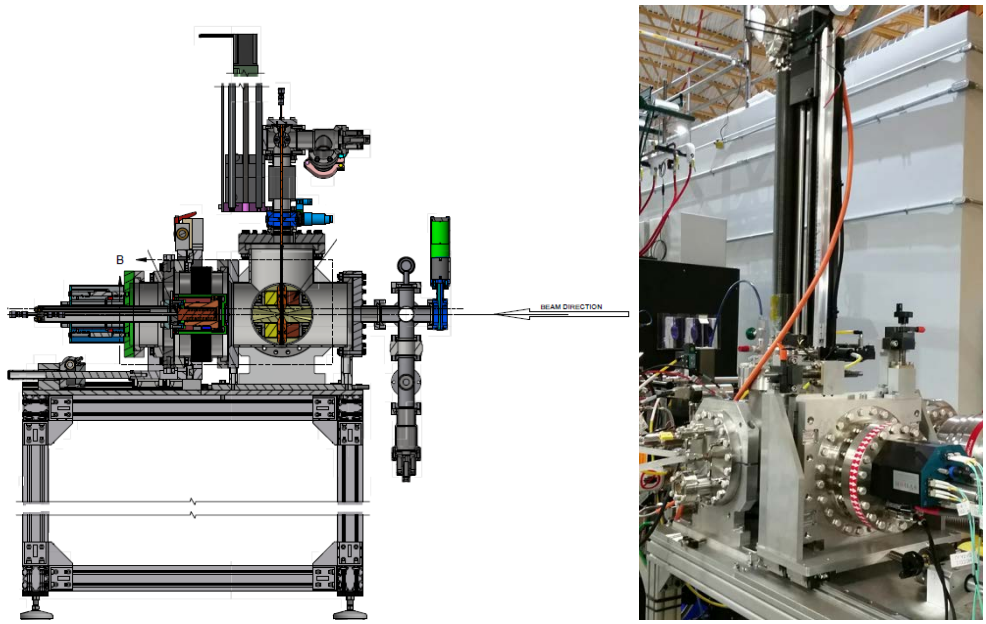

Figure 2. Schematic drawing of the CSX holography chamber (left) and assembled CSX holography chamber (right).

2.2 Holography Endstation Setup

Figure 3 shows an overview of holography endstation setup. The fast CCD camera faces beam in transmission geometry. A key component of this chamber is a in-vacuum electro-magnet, which is in-house developed as

shown in figure 4. There is a water cooling block between two coils, and a hall sensor is installed for measuring magnetic field at sample position. The maxium field at sample position is about 0.7 T when magnet running at 4 amps. Static magnetic field was measured, and readings were taken to define the 5 gauss perimeter around the CSX in-vacuum magnet. The magnet normlly runs at 4 amps and is contained within the confines of the vacuum chamber (figure 2). The maximum field that could be measured was a *contact* measurement directly under the center of the vacuum cross at about 15 gauss. Any and all locations at approximatly 2 cm from the external confines of the vacuum chamber containing the magnet were at or under 5 gauss. This magnet is not expected to pose a risk even to someone with an electronic medical implant.

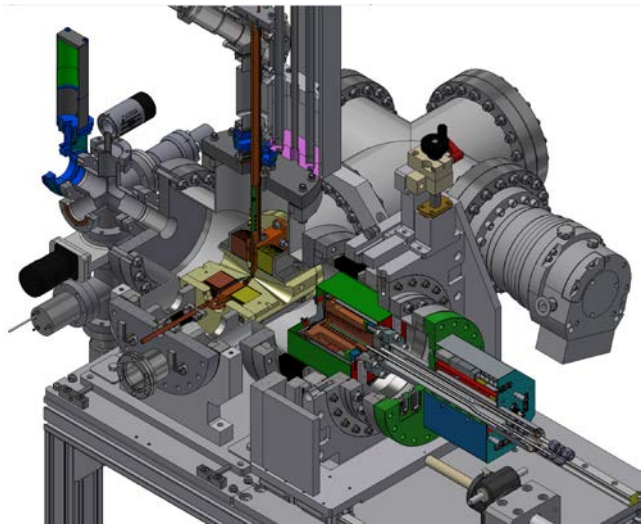

Figure 3. Overview of holography endstation setup.

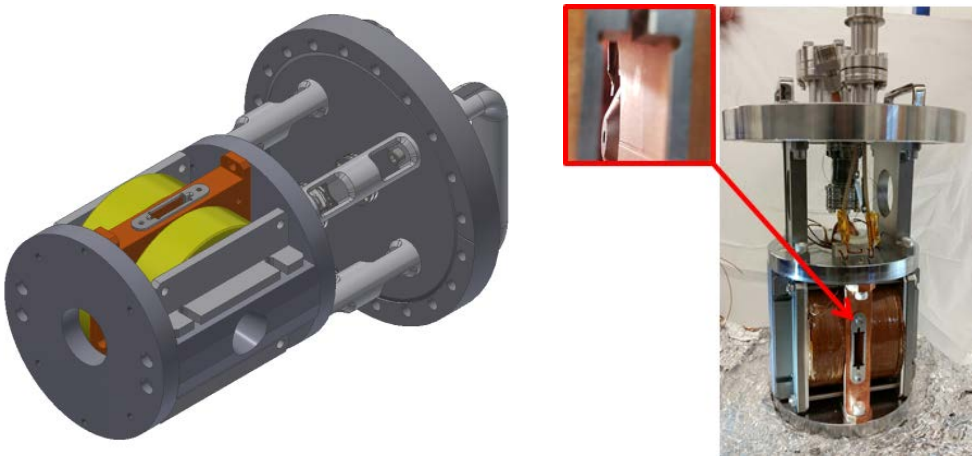

Figure 4. Holography chamber setup: in-vacuum electro-magnet, schematic drawing (left) and photo (right). There is a hall sensor inside cooling block, close to sample position (inset).

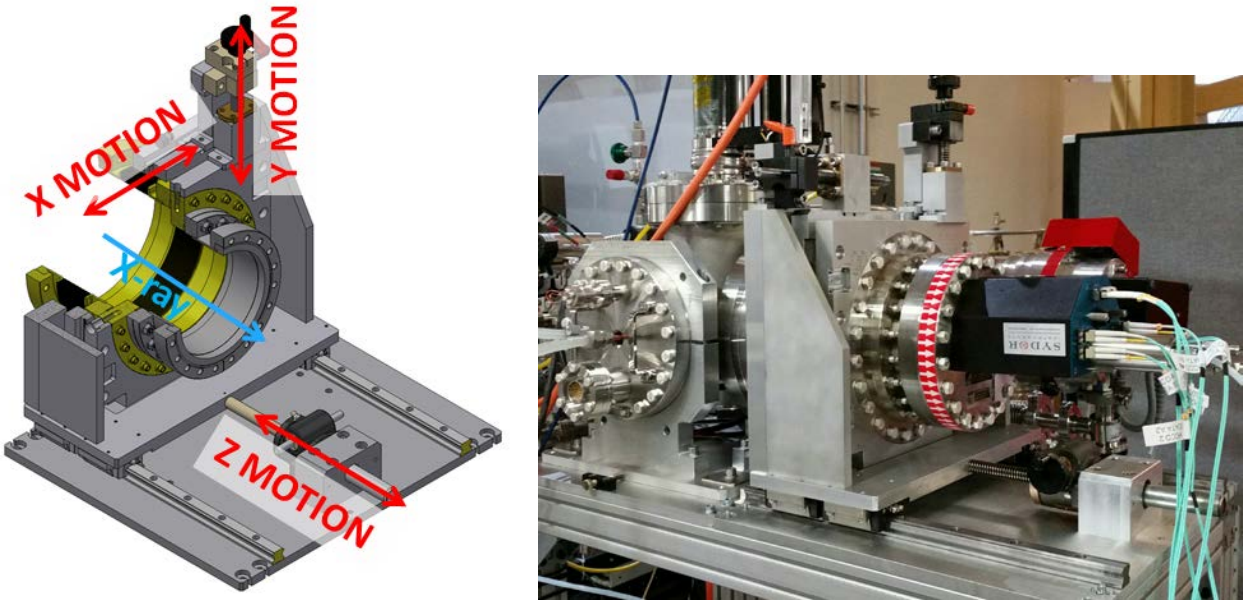

Figure 5. Holography chamber setup: fast CCD X-Y-Z motion module. Schematic drawing (left) and photo (right).

The fast CCD detector has a manual X-Y-Z motion. The sample-detector distance is flexible and can be adjust along beam direction (translatin motion in z-axis). The X, Y, Z-motions are designed and made in-house with materials listed below.

X, Y -MOTION:

- Lead Screw & nut: MISUMI MTSWK16240S44 & MTSGR16
- Linear Guides: McMaster-Carr 5708K25 & 5708K992

Z – MOTION

- Jack Screw: DUFF-NORTON TM-2625-4
- Linear Guides: THK HSR20A-2-QZ-420

3 BEAMLINE SAFETY CREDITED CONTROLS

3.1 Radiation Shielding

The following storage ring and insertion device parameters are used for the calculations herein:

• Electron Energy: 3 GeV

• Stored beam Current: 500 mA

• Elliptically Polarized Undulator Source:

- o Number of periods: 76
- o Period Length: 49.2 mm
- o Maximum Magnetic Field: 0.97 T

According to radiation shielding analysis report, the resulting dose rates on contact with the new end of beamline beam stop are negligible (<0.001 mrem/h). Based on our assessment of the CSX chamber configuration, and simulation results, the RSC report shows that the new CSX holography chamber design meets the NSLS-II shielding policy. Subject to experimental verification by radiation survey, RSC believe the installed chamber and beamstop will provide adequate personnel protection for normal operation and against failures of synchrotron orbit.

3.2 Radiation Safety Components & Radiation Management

Beamline radiation safety components are documented in the NSLS-II Beamline 23-ID Radiation Safety Component Checklist (PS-R-XFD-CHK-001).

The current 23ID-1 beamline is equipped with a 2.75" diameter blank flange which acts as a monochromatic beamstop. The new holography chamber will be connected directly to 23ID-1 beamline by removing this blank flange and connecting to an upstream beam pipe with bellow. The fast CCD camera and its flange of the new chamber will be the new end of beamline component under configuration control. According to radiation shielding analysis report, the resulting dose rates on contact with the new end of beamline beam stop are negligible (<0.001 mrem/h).

3.3 Personnel Protection System (PPS)

New dural vacuum switch #7 was installed for CSX holography chamber and added to the Personnel Protection System (PPS) of CSX beamline (23ID-1). The Personnel Protection System (PPS) controls access to the hutches through interlock system and search and secure procedure to ensure personnel safety during normal operation of the beamline.

3.4 Equipment Protection System (EPS)

The Equipment Protection System (EPS) monitors and interlocks the vacuum status of holography chamber and upstream diagnostic chamber to ensure the safe operation of the equipment. The water flow for cooling in-vacuum magnet is monitored as well.

3.5 Utilities

The following components were added for the holography endstation installation:

- Distribution of DI water for water-cooling of in-vacuum magnet.

- Compressed air for operating 2 gate valves.

3.6 Controls

The motorized component, sample manipulator, has been tested and documented on the endstation installation traveler. Control System Studio (CSS) screens have been prepared to access the motor.