Cell 22-IR FIS-MET Mirrors Controlled Documentation –V1 Padrazo 10-9-18

ITEM	Drawing Number	Title	Description	Complete Date	DAS Signed	R	L	REV	Release Date	NOTES
1	LT-EL-SR-BI-SRD-2109-89	22-IR Mirrors Block Diagram	22IR Mirror Motor Block Diagram	10-18		Y	A2	A	10-12-18	
2	LT-EL-SR-BI-SRD-2109-91	22-IR Mirrors Mtr Wiring Diagram	22IR Mirror Motor Schematic	10-18		Y	A2	A	10-12-18	
3	CP-LT-EL-SR-BI-SRD-2109-91	22-IR Mirrors Cable Pull	22IR Mirror Motor/NET/CAM Cable Pull sheet	05-18		Y	A2	A	5-16-18	
4	N/A	22-IR Mirrors Tun/Rack-Cable Term/Testing	ITR-22IR(M1),(M2-M6) Tunn/Rack Term/Functional Test/Integration Test	10-18	N/A	N/A	N/A	N/A		

BROOKHAVEN NATIONAL LABORATORY

INSPECTION/TEST RECORD

SHEET ____ OF ____

DEPARTMENT/DIVISION/PROJECT NSLS-II Diagnostics & Instrumentation Group

QA CLASSIFICATION: ☐ A1 (CRITICAL/HIGH) ☐ A2 (MAJOR/MODERATE) ■ A3 (MINOR/LOW) ☐ A4 (NEGLIGIBLE)

PART NAME: C22IR FIS-MET MIRROR Motor/Encoder Cable Termination/Test	
PART NO.: LT-EL-SR-BI-SRD-2109-91	REV.: A
PREPARED BY: D. Padrazo	DATE:
VENDOR: N/A	P.O. NO.: N/A
QTY. RECD.: 1	DATE RECD.: 10/18

COMMENTS C22IR FIS-MET Mirror 1 Motors

☐ Inspection/Test Data Attached (Data Sheet To Include: Part Name, Part No., Date, & Sheet _____ of _____)

ITEM	CHARACTERISTIC/REQUIREMENT	INSP.	REJ.	INSPECTOR'S SIGNATURE/LIFE #	DATE
1	Prepare Rack MC23RG-E1 for controller/CAble install	1	0	A Munoz 24635	5/3/18
2	Install Motor Controllers 1,2 at MC23RG-E1. Identify EPS PLC for Temp Sense interface	1	0	A Munoz 24635	5/16/18
3	Reference Documents: LT-EL-SR-BI-SRD-2109-91, -89, CP- LT-EL-SR-BI-SRD-2109-91	1	0	A Munoz 24635	7/10/18
4	Prepare/Install Panduit Labels for all cables as per CP-LT-EL-SR-BI-SRD-2109-91	1	0	A Munoz 24635	7/10/18
5	Install/Drop/Route all cables per cable pull sheet CP-LT-EL-SR-BI-SRD-2109-91 cables for Mirror1	1	0	A Munoz 24635	7/10/18
6	Terminate/Connect all cables. Reference dwg LT-EL-SR-BI-SRD-2109-91 REVA. Tunnel, Rack	1	0	A Munoz 24635	8/23/18
7	Perform M1 Functional Test/ EPS logic motor control/encoder, all axis	1	0	25913	10/15/18
8	Perform M1 Functional Test Camera, Temp Sensors	1	0	25913	10/15/18
9	Perform M1 CSS based Integration Test motor control/encoder, all axis	1	0	25913	10/15/18

Record all nonconformances for each item on page 2 of ITR.

QTY. Accepted 1 Serial (LOT) NOS Accepted _____

MEASUREMENT AND TEST EQUIPMENT RECORD

DESCRIPTION	MODEL NO.	SERIAL NO. /BNL NO.	MFG. NAME	CALIBRATION DUE DATE	* RESP. IND. SIG. (IF REQD.)

* Responsible Individual concurrence is required if M&TE is not calibrated, out of calibration, or not in calibration system.

NONCONFORMING REPORT

ITEM/SER. NO.	DESCRIPTION	** DISPOSITION CODE	RESP. IND. SIG. & DATE

**CODES: UAI (Use as is); RTV (Return to Vendor); RWK (Rework); Repair; Scrap

If nonconforming item is A1 or A2 and disposition is Repair, RTV, RWK, Scrap or UAI, provide additional concurrence below:

QA (if reqd.) _____ DATE _____ OTHER (if reqd.) _____ DATE _____

COMMENTS: _____

BROOKHAVEN NATIONAL LABORATORY

INSPECTION/TEST RECORD

SHEET ____ OF ____

DEPARTMENT/DIVISION/PROJECT NSLS-II Diagnostics & Instrumentation Group

QA CLASSIFICATION: ☐ A1 (CRITICAL/HIGH) ☐ A2 (MAJOR/MODERATE) ■ A3 (MINOR/LOW) ☐ A4 (NEGLIGIBLE)

PART NAME: C22IR FIS-MET MIRROR Motor/Encoder Cable Termination/Test	
PART NO.: LT-EL-SR-BI-SRD-2109-91	REV.: A
PREPARED BY: D. Padrazo	DATE:
VENDOR: N/A	P.O. NO.: N/A
QTY. RECD.: 1	DATE RECD.: 10/18

COMMENTS C22IR FIS-MET Mirror 2 Motors

☐ Inspection/Test Data Attached (Data Sheet To Include: Part Name, Part No., Date, & Sheet _____ of _____)

ITEM	CHARACTERISTIC/REQUIREMENT	INSP.	REJ.	INSPECTOR'S SIGNATURE/LIFE #	DATE
1	Reference Documents: LT-EL-SR-BI-SRD-2109-91, -89, CP- LT-EL-SR-BI-SRD-2109-91	1	0	A Munoz 24635	7/10/18
2	Prepare/Install Panduit Labels for all cables as per CP-LT-EL-SR-BI-SRD-2109-91	1	0	A Munoz 24635	7/10/18
3	Install/Drop/Route all cables per cable pull sheet CP-LT-EL-SR-BI-SRD-2109-91 cables for Mirror2	1	0	A Munoz 24635	7/10/18
4	Terminate/Connect all cables. Reference dwg LT-EL-SR-BI-SRD-2109-91 REVA. Tunnel, Rack	1	0	A Munoz 24635	8/23/18
5	Perform M2 Functional Test motor control/encoder, all axis	1	0	25913	10/15/18
6	Perform M2 Functional Test Camera	1	0	25913	10/15/18
7	Perform M2 CSS based Integration Test motor control/encoder, all axis	1	0	25913	10/15/18
8		1	0		
9		1	0		

Record all nonconformances for each item on page 2 of ITR.

QTY. Accepted. 1 Serial (LOT) NOS Accepted _____

MEASUREMENT AND TEST EQUIPMENT RECORD

DESCRIPTION	MODEL NO.	SERIAL NO. /BNL NO.	MFG. NAME	CALIBRATION DUE DATE	* RESP. IND. SIG. (IF REQD.)

* Responsible Individual concurrence is required if M&TE is not calibrated, out of calibration, or not in calibration system.

NONCONFORMING REPORT

ITEM/SER. NO.	DESCRIPTION	** DISPOSITION CODE	RESP. IND. SIG. & DATE

**CODES: UAI (Use as is); RTV (Return to Vendor); RWK (Rework); Repair; Scrap

If nonconforming item is A1 or A2 and disposition is Repair, RTV, RWK, Scrap or UAI, provide additional concurrence below:

QA (if reqd.) _____ DATE _____ OTHER (if reqd.) _____ DATE _____

COMMENTS: _____

BROOKHAVEN NATIONAL LABORATORY

INSPECTION/TEST RECORD

SHEET ____ OF ____

DEPARTMENT/DIVISION/PROJECT NSLS-II Diagnostics & Instrumentation Group

QA CLASSIFICATION: ☐ A1 (CRITICAL/HIGH) ☐ A2 (MAJOR/MODERATE) ■ A3 (MINOR/LOW) ☐ A4 (NEGLIGIBLE)

PART NAME: C22IR FIS-MET MIRROR Motor/Encoder Cable Termination/Test	
PART NO.: LT-EL-SR-BI-SRD-2109-91	REV.: A
PREPARED BY: D. Padrazo	DATE:
VENDOR: N/A	P.O. NO.: N/A
QTY. RECD.: 1	DATE RECD.: 10/18

COMMENTS C22IR FIS-MET Mirror 3 Motors

☐ Inspection/Test Data Attached (Data Sheet To Include: Part Name, Part No., Date, & Sheet _____ of _____)

ITEM	CHARACTERISTIC/REQUIREMENT	INSP.	REJ.	INSPECTOR'S SIGNATURE/LIFE #	DATE
1	Reference Documents: LT-EL-SR-BI-SRD-2109-91, -89, CP- LT-EL-SR-BI-SRD-2109-91	1	0	A Munoz 24635	7/10/18
2	Prepare/Install Panduit Labels for all cables as per CP-LT-EL-SR-BI-SRD-2109-91	1	0	A Munoz 24635	7/10/18
3	Install/Drop/Route all cables per cable pull sheet CP-LT-EL-SR-BI-SRD-2109-91 cables for Mirror3	1	0	A Munoz 24635	7/10/18
4	Terminate/Connect all cables. Reference dwg LT-EL-SR-BI-SRD-2109-91 REVA. Tunnel, Rack	1	0	A Munoz 24635	8/23/18
5	Perform M3 Functional Test motor control/encoder, all axis	1	0	25913	10/15/18
6	Perform M3 Functional Test Camera	1	0	25913	10/15/18
7	Perform M3 CSS based Integration Test motor control/encoder, all axis	1	0	25913	10/15/18
8		1	0		
9		1	0		

Record all nonconformances for each item on page 2 of ITR.

QTY. Accepted. 1 Serial (LOT) NOS Accepted _____

MEASUREMENT AND TEST EQUIPMENT RECORD

DESCRIPTION	MODEL NO.	SERIAL NO. /BNL NO.	MFG. NAME	CALIBRATION DUE DATE	* RESP. IND. SIG. (IF REQD.)

* Responsible Individual concurrence is required if M&TE is not calibrated, out of calibration, or not in calibration system.

NONCONFORMING REPORT

ITEM/SER. NO.	DESCRIPTION	** DISPOSITION CODE	RESP. IND. SIG. & DATE

**CODES: UAI (Use as is); RTV (Return to Vendor); RWK (Rework); Repair; Scrap

If nonconforming item is A1 or A2 and disposition is Repair, RTV, RWK, Scrap or UAI, provide additional concurrence below:

QA (if reqd.) _____ DATE _____ OTHER (if reqd.) _____ DATE _____

COMMENTS: _____

BROOKHAVEN NATIONAL LABORATORY

INSPECTION/TEST RECORD

SHEET ____ OF ____

DEPARTMENT/DIVISION/PROJECT NSLS-II Diagnostics & Instrumentation Group

QA CLASSIFICATION: ☐ A1 (CRITICAL/HIGH) ☐ A2 (MAJOR/MODERATE) ■ A3 (MINOR/LOW) ☐ A4 (NEGLIGIBLE)

PART NAME: C22IR FIS-MET MIRROR Motor/Encoder Cable Termination/Test	
PART NO.: LT-EL-SR-BI-SRD-2109-91	REV.: A
PREPARED BY: D. Padrazo	DATE:
VENDOR: N/A	P.O. NO.: N/A
QTY. RECD.: 1	DATE RECD.: 10/18

COMMENTS C22IR FIS-MET Mirror 4 Motors

☐ Inspection/Test Data Attached (Data Sheet To Include: Part Name, Part No., Date, & Sheet _____ of _____)

ITEM	CHARACTERISTIC/REQUIREMENT	INSP.	REJ.	INSPECTOR'S SIGNATURE/LIFE #	DATE
1	Reference Documents: LT-EL-SR-BI-SRD-2109-91, -89, CP- LT-EL-SR-BI-SRD-2109-91	1	0	A Munoz 24635	7/10/18
2	Prepare/Install Panduit Labels for all cables as per CP-LT-EL-SR-BI-SRD-2109-91	1	0	A Munoz 24635	7/10/18
3	Install/Drop/Route all cables per cable pull sheet CP-LT-EL-SR-BI-SRD-2109-91 cables for Mirror4	1	0	A Munoz 24635	7/10/18
4	Terminate/Connect all cables. Reference dwg LT-EL-SR-BI-SRD-2109-91 REVA. Tunnel, Rack	1	0	A Munoz 24635	8/23/18
5	Perform M4 Functional Test motor control/encoder, all axis	1	0	25913	10/15/18
6	Perform M4 Functional Test Camera	1	0	25913	10/15/18
7	Perform M4 CSS based Integration Test motor control/encoder, all axis	1	0	25913	10/15/18
8		1	0		
9		1	0		

Record all nonconformances for each item on page 2 of ITR.

QTY. Accepted 1 Serial (LOT) NOS Accepted _____

MEASUREMENT AND TEST EQUIPMENT RECORD

DESCRIPTION	MODEL NO.	SERIAL NO. /BNL NO.	MFG. NAME	CALIBRATION DUE DATE	* RESP. IND. SIG. (IF REQD.)

* Responsible Individual concurrence is required if M&TE is not calibrated, out of calibration, or not in calibration system.

NONCONFORMING REPORT

ITEM/SER. NO.	DESCRIPTION	** DISPOSITION CODE	RESP. IND. SIG. & DATE

**CODES: UAI (Use as is); RTV (Return to Vendor); RWK (Rework); Repair; Scrap

If nonconforming item is A1 or A2 and disposition is Repair, RTV, RWK, Scrap or UAI, provide additional concurrence below:

QA (if reqd.) _____ DATE _____ OTHER (if reqd.) _____ DATE _____

COMMENTS: _____

BROOKHAVEN NATIONAL LABORATORY

INSPECTION/TEST RECORD

SHEET ____ OF ____

DEPARTMENT/DIVISION/PROJECT NSLS-II Diagnostics & Instrumentation Group

QA CLASSIFICATION: ☐ A1 (CRITICAL/HIGH) ☐ A2 (MAJOR/MODERATE) ■ A3 (MINOR/LOW) ☐ A4 (NEGLIGIBLE)

PART NAME: C22IR FIS-MET MIRROR Motor/Encoder Cable Termination/Test	
PART NO.: LT-EL-SR-BI-SRD-2109-91	REV.: A
PREPARED BY: D. Padrazo	DATE:
VENDOR: N/A	P.O. NO.: N/A
QTY. RECD.: 1	DATE RECD.: 10/18

COMMENTS C22IR FIS-MET Mirror 5 Motors

☐ Inspection/Test Data Attached (Data Sheet To Include: Part Name, Part No., Date, & Sheet _____ of _____)

ITEM	CHARACTERISTIC/REQUIREMENT	INSP.	REJ.	INSPECTOR'S SIGNATURE/LIFE #	DATE
1	Reference Documents: LT-EL-SR-BI-SRD-2109-91, -89, CP- LT-EL-SR-BI-SRD-2109-91	1	0	A Munoz 24635	7/10/18
2	Prepare/Install Panduit Labels for all cables as per CP-LT-EL-SR-BI-SRD-2109-91	1	0	A Munoz 24635	7/10/18
3	Install/Drop/Route all cables per cable pull sheet CP-LT-EL-SR-BI-SRD-2109-91 cables for Mirror4	1	0	A Munoz 24635	7/10/18
4	Terminate/Connect all cables. Reference dwg LT-EL-SR-BI-SRD-2109-91 REVA. Tunnel, Rack	1	0	A Munoz 24635	8/23/18
5	Perform M5 Functional Test motor control/encoder, all axis	1	0	25913	10/15/18
6	Perform M5 Functional Test Camera	1	0	25913	10/15/18
7	Perform M5 CSS based Integration Test motor control/encoder, all axis	1	0	25913	10/15/18
8		1	0		
9		1	0		

Record all nonconformances for each item on page 2 of ITR.

QTY. Accepted. 1 Serial (LOT) NOS Accepted _____

MEASUREMENT AND TEST EQUIPMENT RECORD

DESCRIPTION	MODEL NO.	SERIAL NO. /BNL NO.	MFG. NAME	CALIBRATION DUE DATE	* RESP. IND. SIG. (IF REQD.)

* Responsible Individual concurrence is required if M&TE is not calibrated, out of calibration, or not in calibration system.

NONCONFORMING REPORT

ITEM/SER. NO.	DESCRIPTION	** DISPOSITION CODE	RESP. IND. SIG. & DATE

**CODES: UAI (Use as is); RTV (Return to Vendor); RWK (Rework); Repair; Scrap

If nonconforming item is A1 or A2 and disposition is Repair, RTV, RWK, Scrap or UAI, provide additional concurrence below:

QA (if reqd.) _____ DATE _____ OTHER (if reqd.) _____ DATE _____

COMMENTS: _____

BROOKHAVEN NATIONAL LABORATORY

INSPECTION/TEST RECORD

SHEET ____ OF ____

DEPARTMENT/DIVISION/PROJECT NSLS-II Diagnostics & Instrumentation Group

QA CLASSIFICATION: ☐ A1 (CRITICAL/HIGH) ☐ A2 (MAJOR/MODERATE) ■ A3 (MINOR/LOW) ☐ A4 (NEGLIGIBLE)

PART NAME: C22IR FIS-MET MIRROR Motor/Encoder Cable Termination/Test	
PART NO.: LT-EL-SR-BI-SRD-2109-91	REV.: A
PREPARED BY: D. Padrazo	DATE:
VENDOR: N/A	P.O. NO.: N/A
QTY. RECD.: 1	DATE RECD.: 10/18

COMMENTS C22IR FIS-MET Mirror 6 Motors

☐ Inspection/Test Data Attached (Data Sheet To Include: Part Name, Part No., Date, & Sheet _____ of _____)

ITEM	CHARACTERISTIC/REQUIREMENT	INSP.	REJ.	INSPECTOR'S SIGNATURE/LIFE #	DATE
1	Reference Documents: LT-EL-SR-BI-SRD-2109-91, -89, CP- LT-EL-SR-BI-SRD-2109-91	1	0	A Munoz 24635	7/10/18
2	Prepare/Install Panduit Labels for all cables as per CP-LT-EL-SR-BI-SRD-2109-91	1	0	A Munoz 24635	7/10/18
3	Install/Drop/Route all cables per cable pull sheet CP-LT-EL-SR-BI-SRD-2109-91 cables for Mirror4	1	0	A Munoz 24635	7/10/18
4	Terminate/Connect all cables. Reference dwg LT-EL-SR-BI-SRD-2109-91 REVA. Tunnel, Rack	1	0	A Munoz 24635	8/23/18
5	Perform M6 Functional Test motor control/encoder, all axis	1	0	25913	10/15/18
6	Perform M6 Functional Test Camera	1	0	25913	10/15/18
7	Perform M6 CSS based Integration Test motor control/encoder, all axis	1	0	25913	10/15/18
8		1	0		
9		1	0		

Record all nonconformances for each item on page 2 of ITR.

QTY. Accepted 1 Serial (LOT) NOS Accepted _____

MEASUREMENT AND TEST EQUIPMENT RECORD

DESCRIPTION	MODEL NO.	SERIAL NO. /BNL NO.	MFG. NAME	CALIBRATION DUE DATE	* RESP. IND. SIG. (IF REQD.)

* Responsible Individual concurrence is required if M&TE is not calibrated, out of calibration, or not in calibration system.

NONCONFORMING REPORT

ITEM/SER. NO.	DESCRIPTION	** DISPOSITION CODE	RESP. IND. SIG. & DATE

**CODES: UAI (Use as is); RTV (Return to Vendor); RWK (Rework); Repair; Scrap

If nonconforming item is A1 or A2 and disposition is Repair, RTV, RWK, Scrap or UAI, provide additional concurrence below:

QA (if reqd.) _____ DATE _____ OTHER (if reqd.) _____ DATE _____

COMMENTS: _____

REVISION HISTORY					
REV	DESCRIPTION	DATE	DESIGNER	CHECKED BY	ENGINEER
A	INITIAL RELEASE	10/12/2018	M. Pfeffer	J. Malley	D. Padrazo

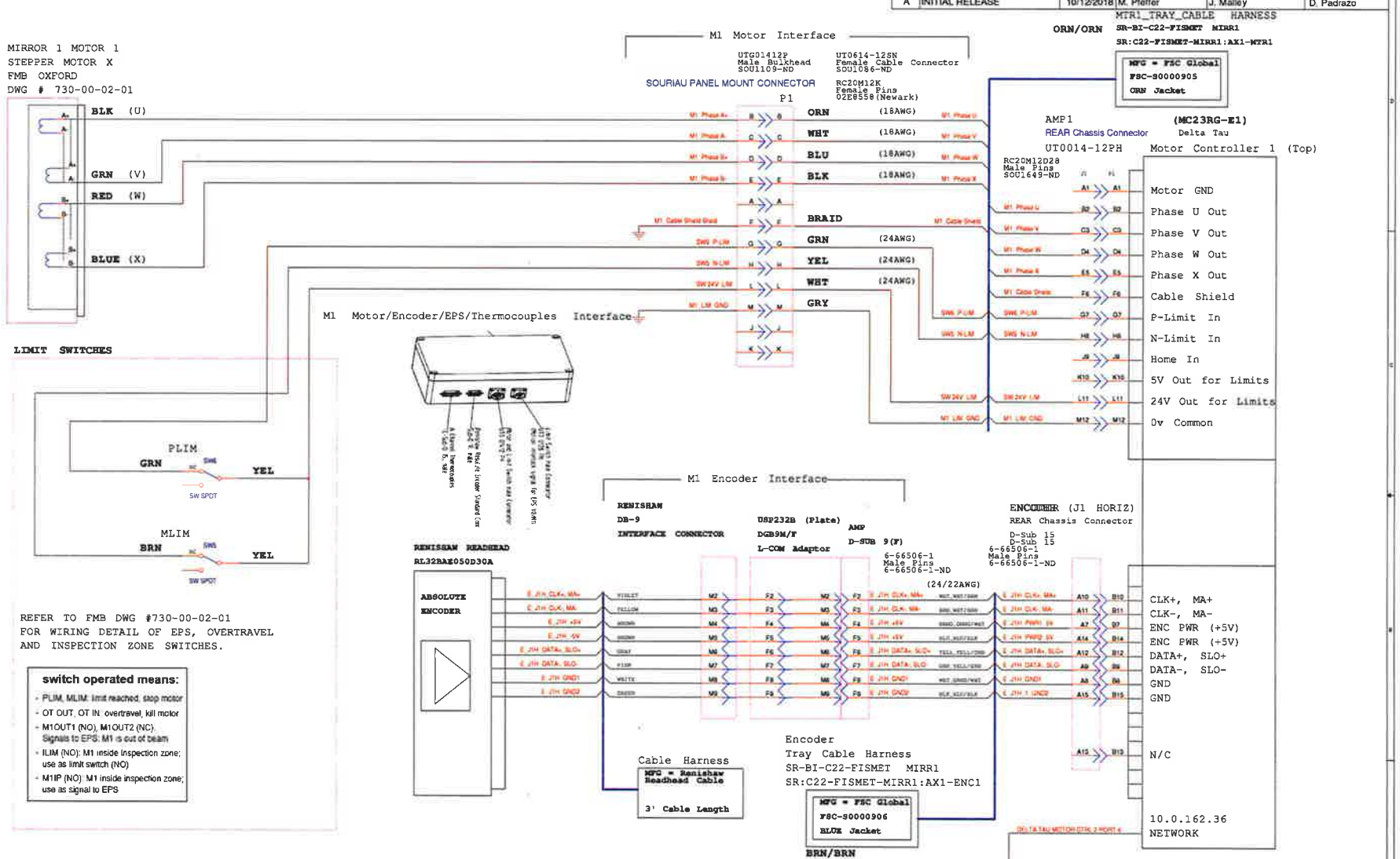

REFER TO FMB DWG #730-00-02-01
FOR WIRING DETAIL OF EPS, OVERTRAVEL
AND INSPECTION ZONE SWITCHES.

switch operated means:

- PLIM, MLIM: limit reached, stop motor
- OT OUT, OT IN: overtravel, kill motor
- M1OUT1 (NO), M1OUT2 (NC): Signals to EPS; M1 is out of beam
- ILIM (NO): M1 inside inspection zone; use as limit switch (NO)
- M1IP (NO): M1 inside inspection zone; use as signal to EPS

UNLESS OTHERWISE SPECIFIED
ALL DIMENSIONS ARE IN INCHES

BROOKHAVEN NATIONAL LABORATORY
BROOKHAVEN SCIENCE ASSOCIATES
UPTON, NEW YORK 11973
Exploring Life's Mysteries, Protecting Its Future

NSLS II
NATIONAL SYNCHROTRON LIGHT SOURCE II

DRAWN BY	J. Schenck	10/12/2018
CHECKED BY	J. Malley	10/12/2018
VACUUM APPROVAL	N/A	
ENGINEER APPROVAL	D. Padrazo	10/12/2018
SUPERVISOR APPROVAL	D. Padrazo	10/12/2018
ESH APPROVAL	B. Lee	10/11/2018
QA APPROVAL	E. Chasewick	10/11/2018

WIRING DIAGRAM

SR FE MIRROR,22-IR (FIS/MET)

MIRROR MTR CTRL I/F WITH LIMITS ENCODER MIRROR

SHEET SIZE	DRAWING PART NUMBER	REVISION
C	LT-EL-SR-BI-SRD-2109-91	A

ESH&Q RISK LEVEL: A-2

SHEET 1 of 15

NEXT ASSY:

PROJECT:

SCALE: SEE DWG VIEW

WBS#

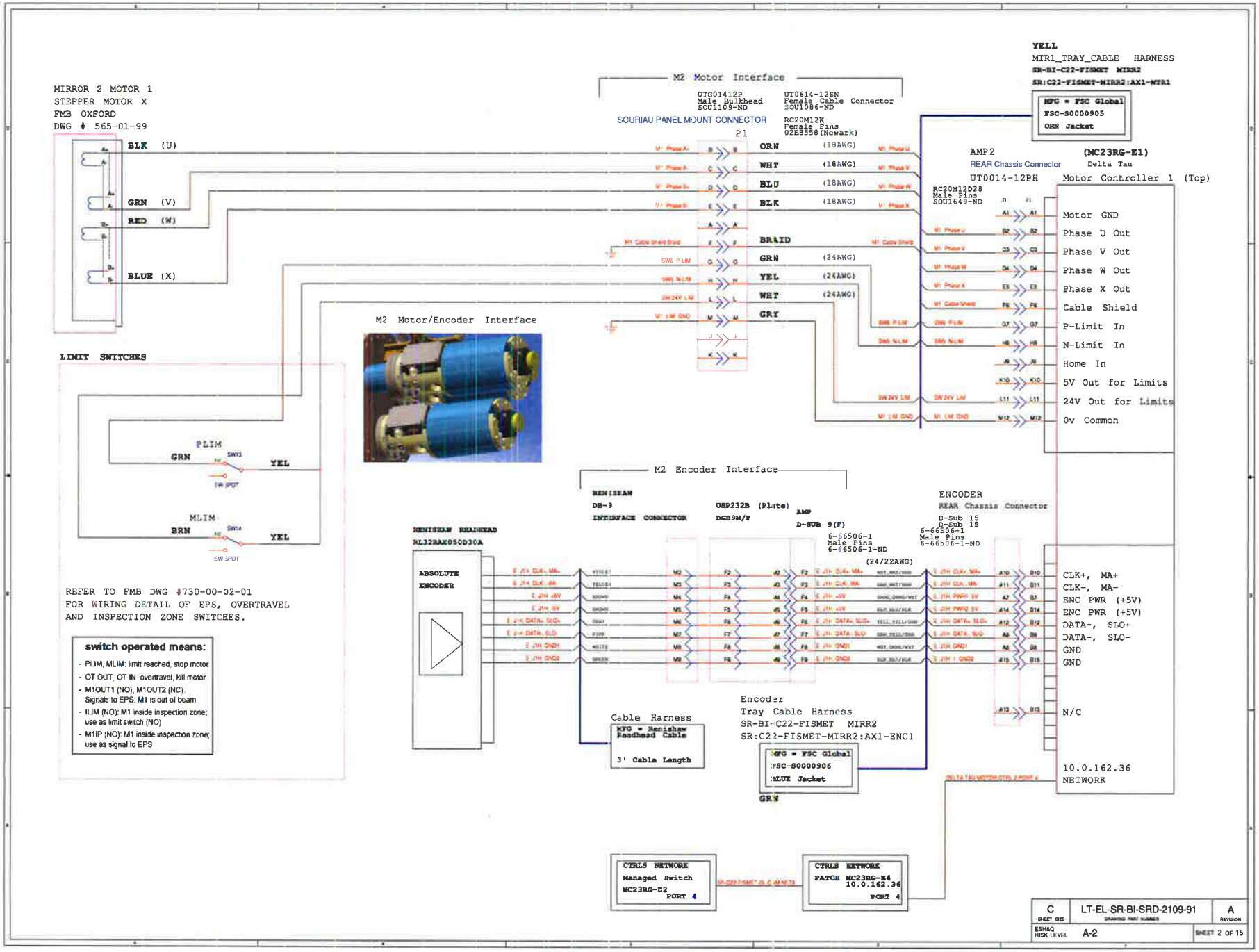
MIRROR 2 MOTOR 1
STEPPER MOTOR X
FMB OXFORD
DWG # 565-01-99
BLK (U)
GRN (V)
RED (W)
BLUE (X)
LIMIT SWITCHES
PLIM
GRN
YEL
MLIM
BRN
YEL
REFER TO FMB DWG #730-00-02-01
FOR WIRING DETAIL OF EPS, OVERTRAVEL
AND INSPECTION ZONE SWITCHES.
switch operated means:
- PLIM, MLIM: limit reached, stop motor
- OT OUT, OT IN: overtravel, kill motor
- M1OUT1 (NO), M1OUT2 (NC): Signals to EPS: M1 is out of beam
- ILIM (NO): M1 inside inspection zone; use as limit switch (NO)
- M1IP (NO): M1 inside inspection zone; use as signal to EPS
M2 Motor Interface
UTG01412P
Male Bulkhead
SOU1109-ND
UT0614-12SN
Female Cable Connector
SOU1086-ND
SOURIAU PANEL MOUNT CONNECTOR
P1
RC20M12K
Female Pins
02E8558(Newark)
ORN (18AWG)
WHT (18AWG)
BLU (18AWG)
BLK (18AWG)
BRAID
GRN (24AWG)
YEL (24AWG)
WHT (24AWG)
GRY
YELL
MTR1_TRAY_CABLE HARNESS
SR-BI-C22-FISMET MIRR2
SR:C22-FISMET-MIRR2:AX1-MTA1
MFG = FSC Global
FSC-S0000905
ORN Jacket
AMP2
REAR Chassis Connector
UT0014-12PH
(MC23RG-E1)
Delta Tau
Motor Controller 1 (Top)
RC20M12D28
Male Pins
SOU1649-ND
Motor GND
Phase U Out
Phase V Out
Phase W Out
Phase X Out
Cable Shield
P-Limit In
N-Limit In
Home In
5V Out for Limits
24V Out for Limits
0v Common
M2 Motor/Encoder Interface
M2 Encoder Interface
RENISHAW
DB-9
INTERFACE CONNECTOR
USP232B (Plite)
DGB9M/F
AMP
D-SUB 9(F)
6-66506-1
Male Pins
6-66506-1-ND
(24/22AWG)
ENCODER
REAR Chassis Connector
D-Sub 15
D-Sub 15
6-66506-1
Male Pins
6-66506-1-ND
RENISHAW READHEAD
RL32BAE050D30A
ABSOLUTE
ENCODER
CLK+, MA+
CLK-, MA-
ENC PWR (+5V)
ENC PWR (+5V)
DATA+, SLO+
DATA-, SLO-
GND
GND
N/C
10.0.162.36
NETWORK
Cable Harness
MFG = Renishaw
Readhead Cable
3' Cable Length
Encoder
Tray Cable Harness
SR-BI-C22-FISMET MIRR2
SR:C22-FISMET-MIRR2:AX1-ENC1
MFG = FSC Global
FSC-S0000906
BLUE Jacket
GRN
CTRLS NETWORK
Managed Switch
MC23RG-E2
PORT 4
CTRLS NETWORK
PATCH MC23RG-E4
10.0.162.36
PORT 4
C
SHEET SIZE
LT-EL-SR-BI-SRD-2109-91
DRAWING PART NUMBER
A
REVISION
ESH&Q RISK LEVEL
A-2
SHEET 2 OF 15

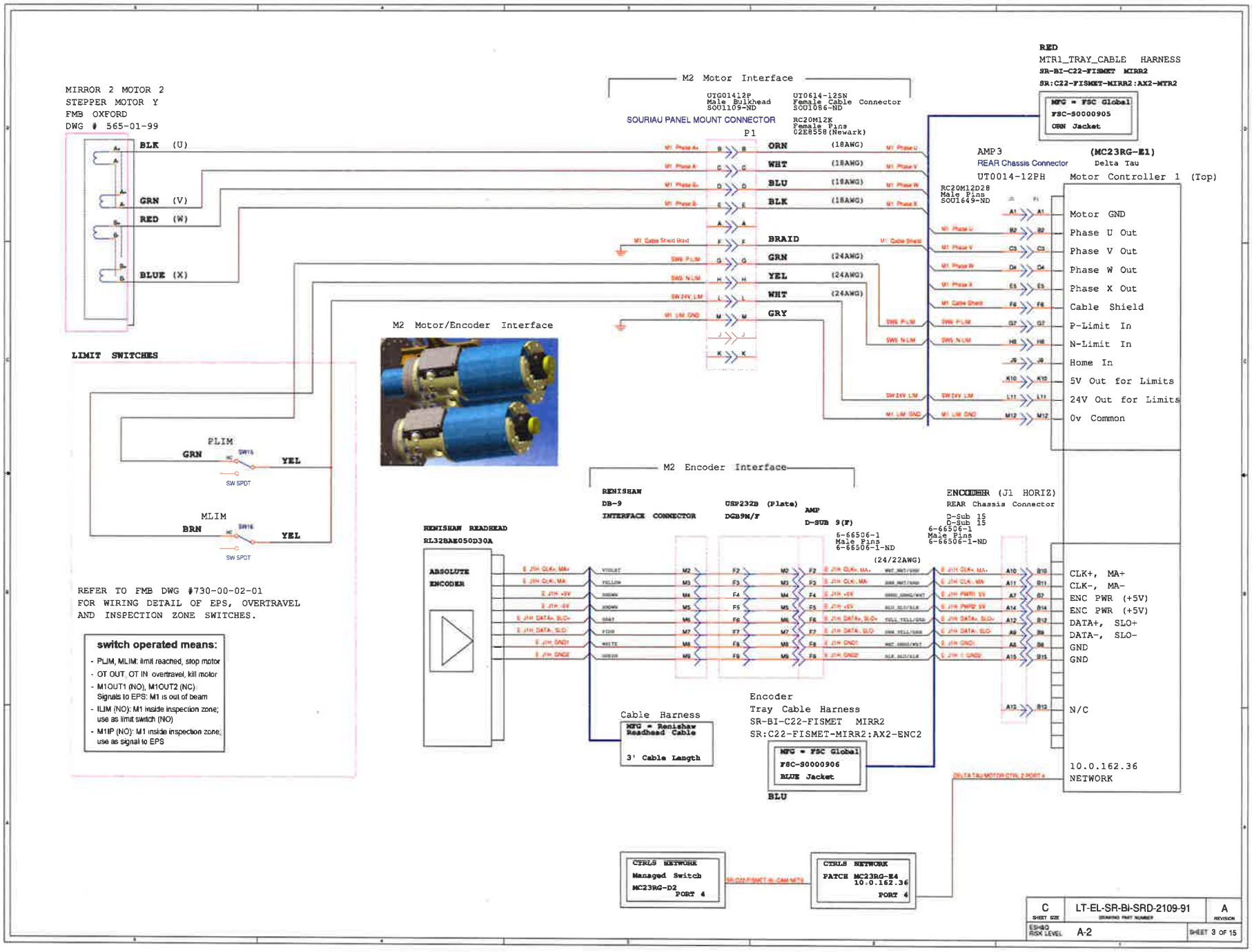
MIRROR 2 MOTOR 2
STEPPER MOTOR Y
FMB OXFORD
DWG # 565-01-99
BLK (U)
GRN (V)
RED (W)
BLUE (X)
M2 Motor Interface
UTG01412P
Male Bulkhead
S001109-ND
UT0614-12SN
Female Cable Connector
S001086-ND
SOURIAU PANEL MOUNT CONNECTOR
P1
RC20M12K
Female Pins
02E8558 (Newark)
ORN (18AWG)
WHT (18AWG)
BLU (18AWG)
BLK (18AWG)
BRAID
GRN (24AWG)
YEL (24AWG)
WHT (24AWG)
GRY
RED
MTR1_TRAY_CABLE HARNESS
SR-BI-C22-FISMET MIRR2
SR:C22-FISMET-MIRR2:AX2-MTR2
MFG = FSC Global
FSC-S0000905
ORN Jacket
AMP3
REAR Chassis Connector
UT0014-12PH
RC20M12D2B
Male Pins
S001649-ND
(MC23RG-E1)
Delta Tau
Motor Controller 1 (Top)
Motor GND
Phase U Out
Phase V Out
Phase W Out
Phase X Out
Cable Shield
P-Limit In
N-Limit In
Home In
5V Out for Limits
24V Out for Limits
0v Common
LIMIT SWITCHES
PLIM
GRN
YEL
SW SPDT
MLIM
BRN
YEL
SW SPDT
M2 Motor/Encoder Interface
REFER TO FMB DWG #730-00-02-01
FOR WIRING DETAIL OF EPS, OVERTRAVEL
AND INSPECTION ZONE SWITCHES.
switch operated means:
- PLIM, MLIM: limit reached, stop motor
- OT OUT, OT IN: overtravel, kill motor
- M1OUT1 (NO), M1OUT2 (NC): Signals to EPS: M1 is out of beam
- ILIM (NO): M1 inside inspection zone; use as limit switch (NO)
- M1IP (NO): M1 inside inspection zone; use as signal to EPS
M2 Encoder Interface
RENISHAW
DB-9
INTERFACE CONNECTOR
USP232B (Plate)
DGB9M/F
AMP
D-SUB 9(F)
6-66506-1
Male Pins
6-66506-1-ND
(24/22AWG)
ENCODER (J1 HORIZ)
REAR Chassis Connector
D-Sub 15
D-Sub 15
6-66506-1
Male Pins
6-66506-1-ND
RENISHAW READHEAD
RL32BAE050D30A
ABSOLUTE
ENCODER
CLK+, MA+
CLK-, MA-
ENC PWR (+5V)
ENC PWR (+5V)
DATA+, SLO+
DATA-, SLO-
GND
GND
N/C
10.0.162.36
NETWORK
Cable Harness
MFG = Renishaw
Readhead Cable
3' Cable Length
Encoder
Tray Cable Harness
SR-BI-C22-FISMET MIRR2
SR:C22-FISMET-MIRR2:AX2-ENC2
MFG = FSC Global
FSC-S0000906
BLUE Jacket
BLU
CTRLS NETWORK
Managed Switch
MC23RG-D2
PORT 4
CTRLS NETWORK
PATCH MC23RG-E4
10.0.162.36
PORT 4
C
SHEET SIZE
LT-EL-SR-BI-SRD-2109-91
DRAWING PART NUMBER
A
REVISION
ESH&Q RISK LEVEL
A-2
SHEET 3 OF 15

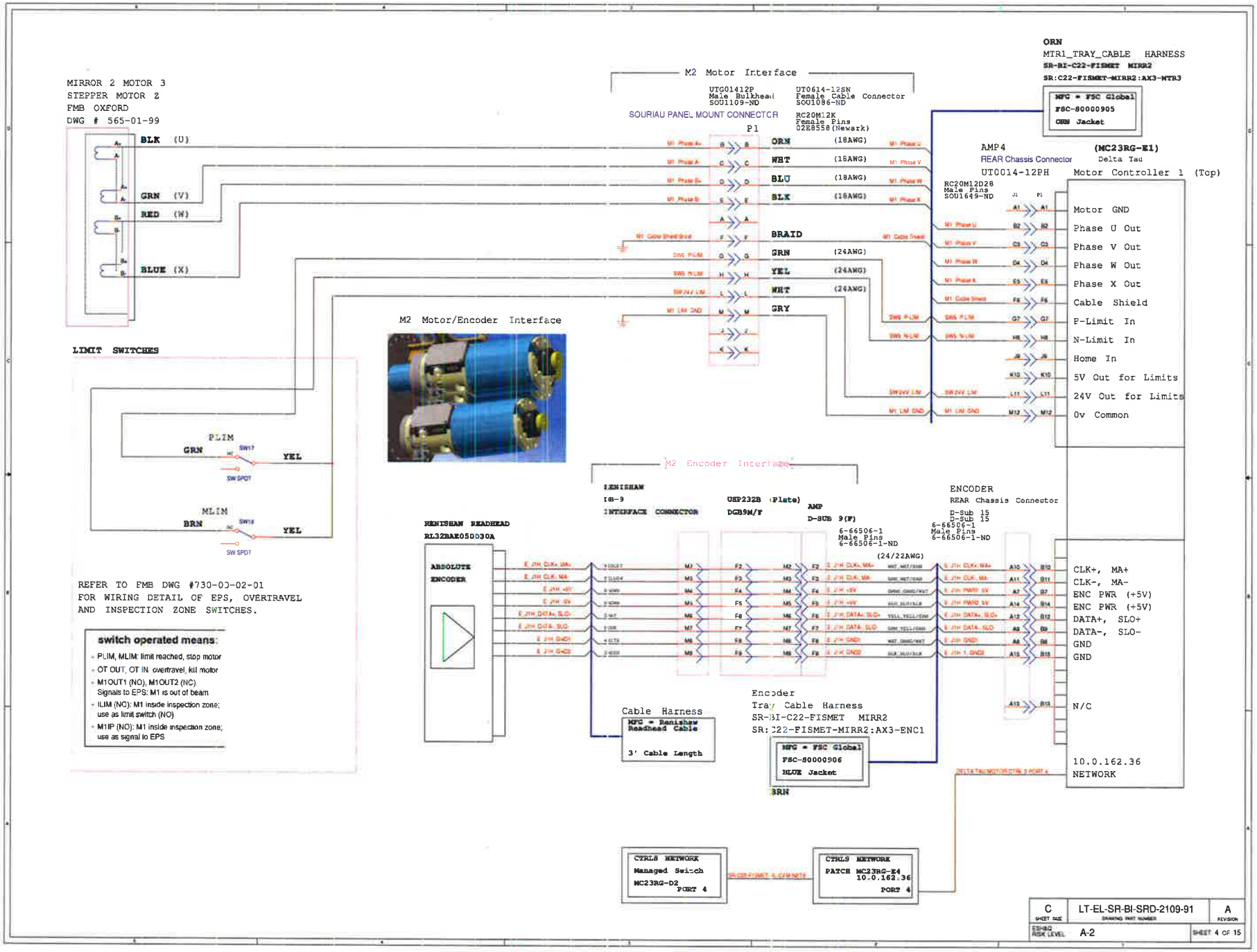
MIRROR 2 MOTOR 3
STEPPER MOTOR Z
FMB OXFORD
DWG # 565-01-99
BLK (U)
GRN (V)
RED (W)
BLUE (X)
M2 Motor Interface
UTG01412P
Male Bulkhead
S001109-ND
UT0614-12SN
Female Cable Connector
S001086-ND
SOURIAU PANEL MOUNT CONNECTOR
RC20M12K
Female Pins
02E8558(Newark)
P1
ORN (18AWG)
WHT (18AWG)
BLU (18AWG)
BLK (18AWG)
BRAID
GRN (24AWG)
YEL (24AWG)
WHT (24AWG)
GRY
ORN
MTR1_TRAY_CABLE HARNESS
SR-BI-C22-FISMET MIRR2
SR:C22-FISMET-MIRR2:AX3-MTR3
MFG = FSC Global
FSC-80000905
ORN Jacket
AMP4
REAR Chassis Connector
UT0014-12PH
RC20M12D28
Male Pins
S001649-ND
(MC23RG-E1)
Delta Tau
Motor Controller 1 (Top)
Motor GND
Phase U Out
Phase V Out
Phase W Out
Phase X Out
Cable Shield
P-Limit In
N-Limit In
Home In
5V Out for Limits
24V Out for Limits
0v Common
M2 Motor/Encoder Interface
LIMIT SWITCHES
PLIM
GRN
YEL
SW SPDT
MLIM
BRN
YEL
SW SPDT
REFER TO FMB DWG #730-00-02-01
FOR WIRING DETAIL OF EPS, OVERTRAVEL
AND INSPECTION ZONE SWITCHES.
switch operated means:
PLIM, MLIM: limit reached, stop motor
OT OUT, OT IN: overtravel, kill motor
M1OUT1 (NO), M1OUT2 (NC)
Signals to EPS: M1 is out of beam
ILIM (NC): M1 inside inspection zone; use as limit switch (NO)
M1IP (NO): M1 inside inspection zone; use as signal to EPS
M2 Encoder Interface
RENISHAW
IB-9
INTERFACE CONNECTOR
USP232B (Plate)
DGB9M/F
AMP
D-SUB 9(F)
6-66506-1
Male Pins
6-66506-1-ND
(24/22AWG)
ENCODER
REAR Chassis Connector
D-Sub 15
D-Sub 15
6-66506-1
Male Pins
6-66506-1-ND
RENISHAW READHEAD
RL32BAE050D30A
ABSOLUTE
ENCODER
CLK+, MA+
CLK-, MA-
ENC PWR (+5V)
ENC PWR (+5V)
DATA+, SLO+
DATA-, SLO-
GND
GND
N/C
10.0.162.36
NETWORK
Cable Harness
MFG = Renishaw
Readhead Cable
3' Cable Length
Encoder
Tray Cable Harness
SR-BI-C22-FISMET MIRR2
SR:C22-FISMET-MIRR2:AX3-ENC1
MFG = FSC Global
FSC-80000906
BLUE Jacket
BRN
CTRLS NETWORK
Managed Switch
MC23RG-D2
PORT 4
CTRLS NETWORK
PATCH MC23RG-E4
10.0.162.36
PORT 4
C
LT-EL-SR-BI-SRD-2109-91
A
A-2
SHEET 4 OF 15

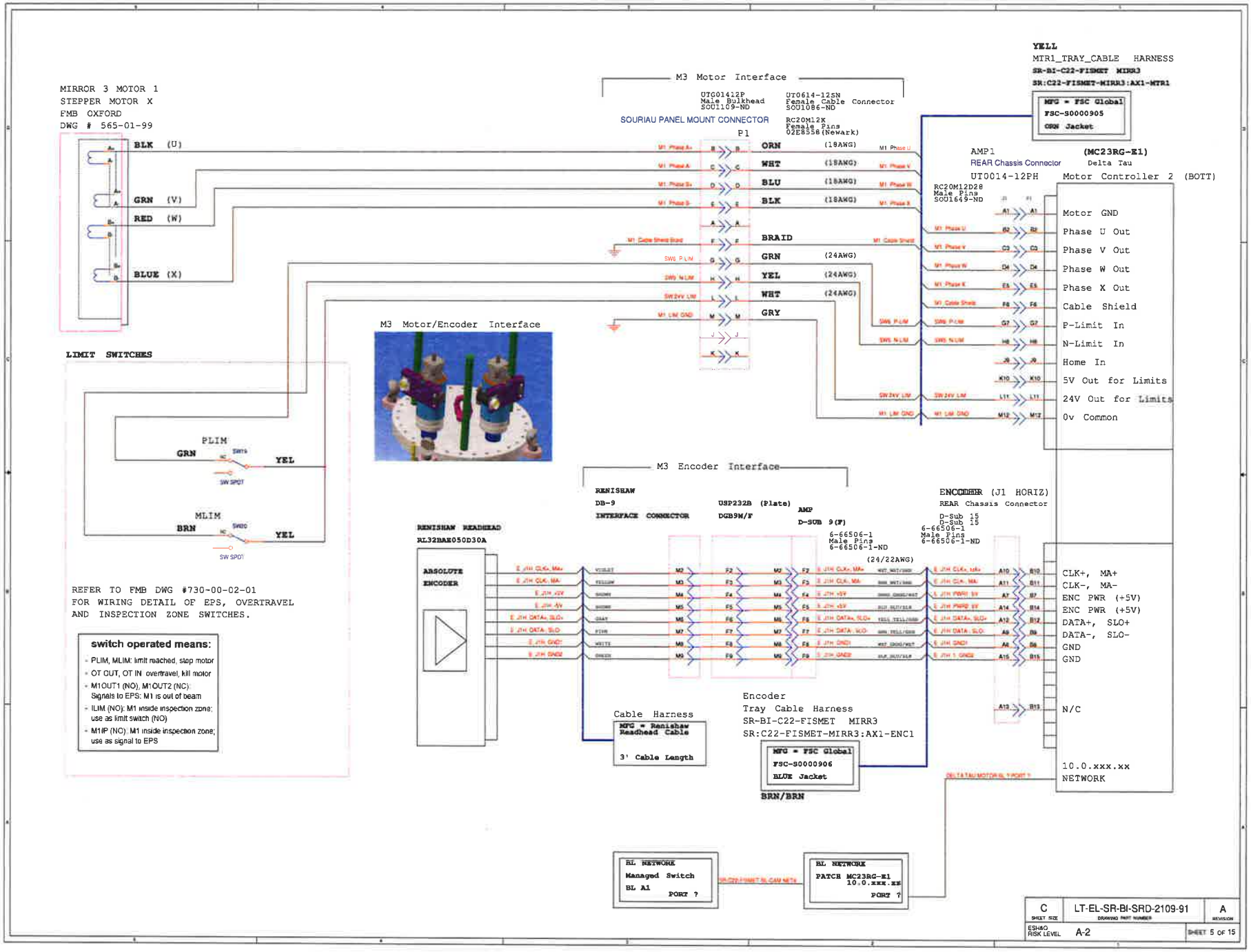
MIRROR 3 MOTOR 1
STEPPER MOTOR X
FMB OXFORD
DWG # 565-01-99
BLK (U)
GRN (V)
RED (W)
BLUE (X)
M3 Motor Interface
UT01412P
Male Bulkhead
SO01109-ND
UT0614-12SN
Female Cable Connector
SO01086-ND
SOURIAU PANEL MOUNT CONNECTOR
P1
RC20M12K
Female Pins
02E8558(Newark)
ORN (18AWG)
WHT (18AWG)
BLU (18AWG)
BLK (18AWG)
BRAID
GRN (24AWG)
YEL (24AWG)
WHT (24AWG)
GRY
YELL
MTR1_TRAY_CABLE HARNESS
SR-BI-C22-FISMET MIRR3
SN:C22-FISMET-MIRR3:AX1-MTR1
MFG = FSC Global
FSC-S0000905
ORN Jacket
AMP1
REAR Chassis Connector
UT0014-12PH
(MC23RG-E1)
Delta Tau
Motor Controller 2 (BOTT)
RC20M12D28
Male Pins
SO01649-ND
Motor GND
Phase U Out
Phase V Out
Phase W Out
Phase X Out
Cable Shield
P-Limit In
N-Limit In
Home In
5V Out for Limits
24V Out for Limits
0v Common
LIMIT SWITCHES
PLIM
GRN
YEL
MLIM
BRN
YEL
M3 Motor/Encoder Interface
REFER TO FMB DWG #730-00-02-01
FOR WIRING DETAIL OF EPS, OVERTRAVEL
AND INSPECTION ZONE SWITCHES.
switch operated means:
PLIM, MLIM: limit reached, stop motor
OT OUT, OT IN: overtravel, kill motor
M1OUT1 (NO), M1OUT2 (NC):
Signals to EPS: M1 is out of beam
ILIM (NO): M1 inside inspection zone;
use as limit switch (NO)
M1IP (NO): M1 inside inspection zone;
use as signal to EPS
M3 Encoder Interface
RENISHAW
DB-9
INTERFACE CONNECTOR
USP232B (Plate)
DGB9M/F
AMP
D-SUB 9(F)
6-66506-1
Male Pins
6-66506-1-ND
(24/22AWG)
ENCODER (J1 HORIZ)
REAR Chassis Connector
D-Sub 15
D-Sub 15
6-66506-1
Male Pins
6-66506-1-ND
RENISHAW READHEAD
RL32BAE050D30A
ABSOLUTE
ENCODER
CLK+, MA+
CLK-, MA-
ENC PWR (+5V)
ENC PWR (+5V)
DATA+, SLO+
DATA-, SLO-
GND
GND
N/C
10.0.xxx.xx
NETWORK
Cable Harness
MFG = Renishaw
Readhead Cable
3' Cable Length
Encoder
Tray Cable Harness
SR-BI-C22-FISMET MIRR3
SR:C22-FISMET-MIRR3:AX1-ENC1
MFG = FSC Global
FSC-S0000906
BLUE Jacket
BRN/BRN
RL NETWORK
Managed Switch
BL A1
PORT ?
RL NETWORK
PATCH MC23RG-E1
10.0.xxx.xx
PORT ?
C
SHEET SIZE
LT-EL-SR-BI-SRD-2109-91
DRAWING PART NUMBER
A
REVISION
ESH&Q
RISK LEVEL
A-2
SHEET 5 OF 15

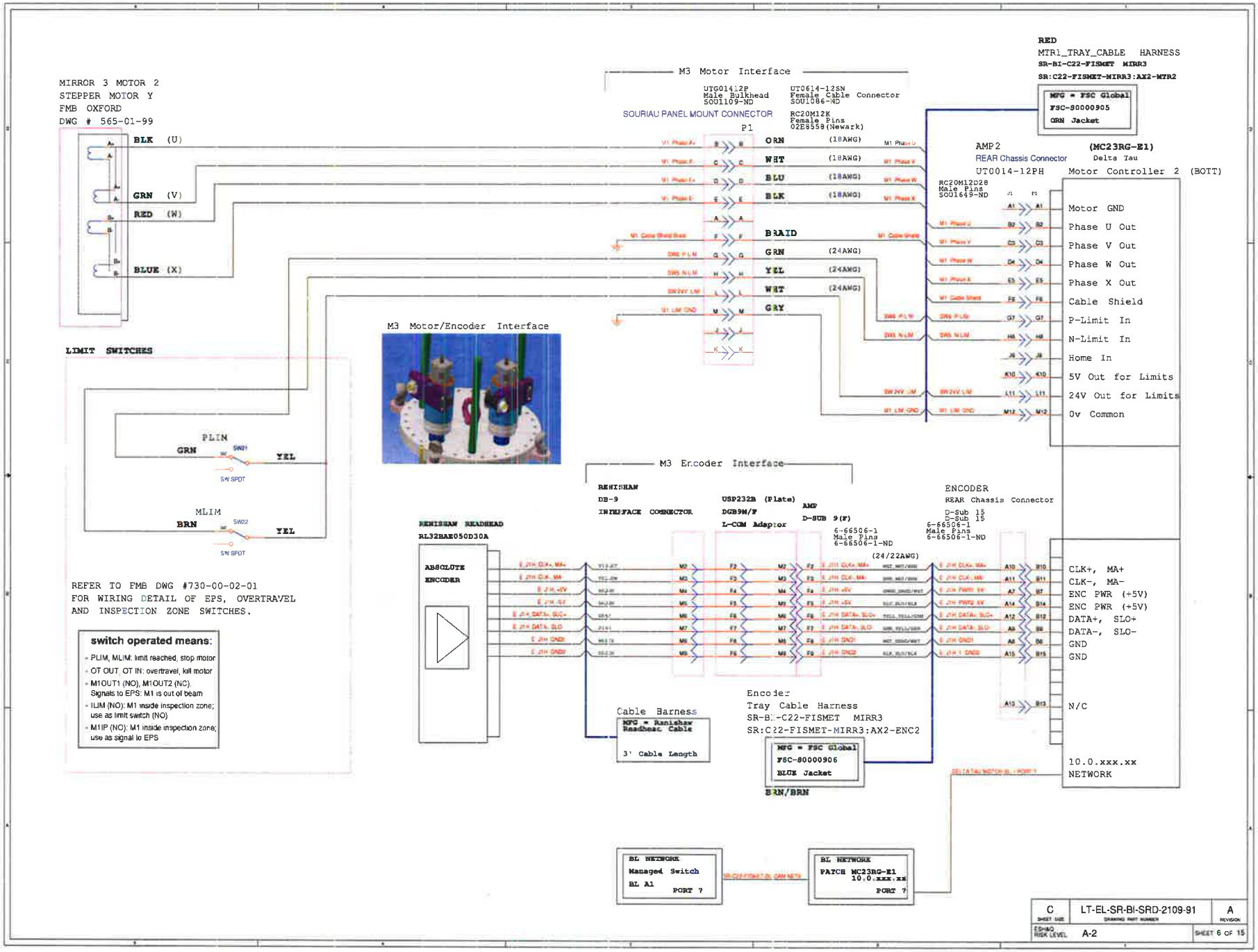
MIRROR 3 MOTOR 2
STEPPER MOTOR Y
FMB OXFORD
DWG # 565-01-99
BLK (U)
GRN (V)
RED (W)
BLUE (X)
M3 Motor Interface
UTG01412P
Male Bulkhead
SO01109-ND
UT0614-12SN
Female Cable Connector
SO01086-ND
SOURIAU PANEL MOUNT CONNECTOR
RC20M12K
Female Pins
02E8559(Newark)
P1
ORN (18AWG)
WHT (18AWG)
BLU (18AWG)
BLK (18AWG)
BRAID
GRN (24AWG)
YEL (24AWG)
WHT (24AWG)
GRY
RED
MTR1_TRAY_CABLE HARNESS
SR-BI-C22-FISMET MIRR3
SR:C22-FISMET-MIRR3:AX2-MTR2
MFG = FSC Global
FSC-80000905
GRN Jacket
AMP 2
REAR Chassis Connector
UT0014-12PH
RC20M12D28
Male Pins
SO01649-ND
(MC23RG-E1)
Delta Tau
Motor Controller 2 (BOTT)
Motor GND
Phase U Out
Phase V Out
Phase W Out
Phase X Out
Cable Shield
P-Limit In
N-Limit In
Home In
5V Out for Limits
24V Out for Limits
0v Common
M3 Motor/Encoder Interface
LIMIT SWITCHES
PLIM
GRN
YEL
SW21
SW SPDT
MLIM
BRN
YEL
SW22
SW SPDT
REFER TO FMB DWG #730-00-02-01
FOR WIRING DETAIL OF EPS, OVERTRAVEL
AND INSPECTION ZONE SWITCHES.
switch operated means:
PLIM, MLIM: limit reached, stop motor
OT OUT, OT IN: overtravel, kill motor
M1OUT1 (NO), M1OUT2 (NC): Signals to EPS: M1 is out of beam
ILIM (NO): M1 inside inspection zone; use as limit switch (NO)
M1IP (NO): M1 inside inspection zone; use as signal to EPS
M3 Encoder Interface
RENISHAW
DB-9
INTERFACE CONNECTOR
USP232B (Plate)
DGB9M/F
L-COM Adaptor
AMP
D-SUB 9(F)
6-66506-1
Male Pins
6-66506-1-ND
(24/22AWG)
ENCODER
REAR Chassis Connector
D-Sub 15
D-Sub 15
6-66506-1
Male Pins
6-66506-1-ND
RENISHAW READHEAD
RL32BAE050D30A
ABSOLUTE
ENCODER
CLK+, MA+
CLK-, MA-
ENC PWR (+5V)
ENC PWR (+5V)
DATA+, SLO+
DATA-, SLO-
GND
GND
N/C
10.0.xxx.xx
NETWORK
Cable Harness
MFG = Renishaw
Readhead Cable
3' Cable Length
Encoder
Tray Cable Harness
SR-BI-C22-FISMET MIRR3
SR:C22-FISMET-MIRR3:AX2-ENC2
MFG = FSC Global
FSC-80000906
BLUE Jacket
BRN/BRN
BL NETWORK
Managed Switch
BL A1
PORT ?
BL NETWORK
PATCH MC23RG-E1
10.0.xxx.xx
PORT ?
C
LT-EL-SR-BI-SRD-2109-91
A
A-2
SHEET 6 OF 15

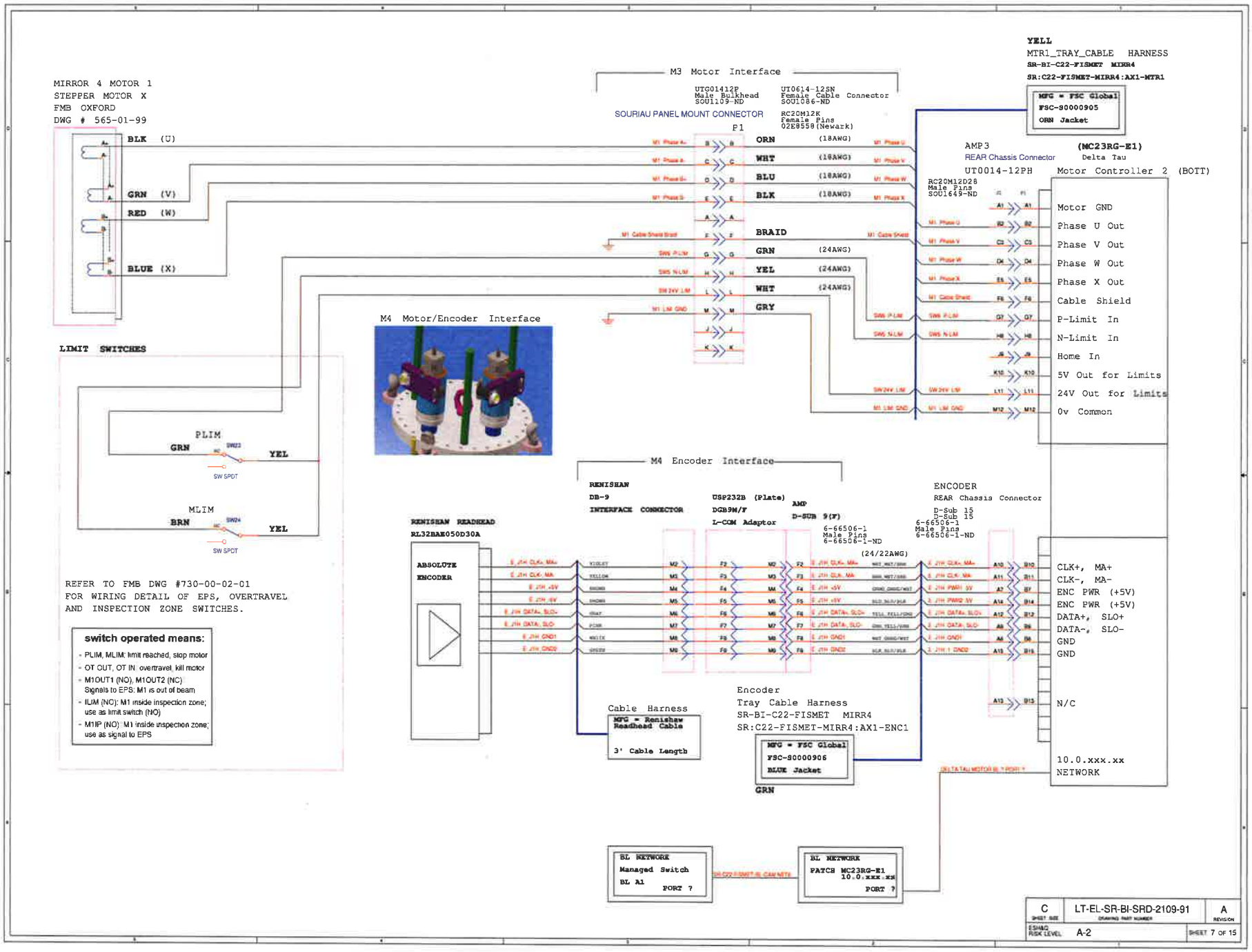
MIRROR 4 MOTOR 1
STEPPER MOTOR X
FMB OXFORD
DWG # 565-01-99
BLK (U)
GRN (V)
RED (W)
BLUE (X)
LIMIT SWITCHES
PLIM
GRN
YEL
SW SPDT
MLIM
BRN
YEL
SW SPDT
REFER TO FMB DWG #730-00-02-01
FOR WIRING DETAIL OF EPS, OVERTRAVEL
AND INSPECTION ZONE SWITCHES.
switch operated means:
- PLIM, MLIM: limit reached, stop motor
- OT OUT, OT IN: overtravel, kill motor
- M1OUT1 (NO), M1OUT2 (NC): Signals to EPS: M1 is out of beam
- ILIM (NO): M1 inside inspection zone; use as limit switch (NO)
- M1IP (NO): M1 inside inspection zone; use as signal to EPS
M3 Motor Interface
UTG01412P
Male Bulkhead
SOU1109-ND
UT0614-12SN
Female Cable Connector
SOU1086-ND
SOURIAU PANEL MOUNT CONNECTOR
RC20M12K
Female Pins
02E8558(Newark)
P1
ORN (18AWG)
WHT (18AWG)
BLU (18AWG)
BLK (18AWG)
BRAID
GRN (24AWG)
YEL (24AWG)
WHT (24AWG)
GRY
YELL
MTR1_TRAY_CABLE HARNESS
SR-BI-C22-FISMET MIRR4
SR:C22-FISMET-MIRR4:AX1-MTR1
MFG = FSC Global
FSC-S0000905
ORN Jacket
AMP3
REAR Chassis Connector
UT0014-12PH
(MC23RG-E1)
Delta Tau
Motor Controller 2 (BOTT)
RC20M12D28
Male Pins
SOU1649-ND
Motor GND
Phase U Out
Phase V Out
Phase W Out
Phase X Out
Cable Shield
P-Limit In
N-Limit In
Home In
5V Out for Limits
24V Out for Limits
0v Common
M4 Motor/Encoder Interface
M4 Encoder Interface
RENISHAW
DB-9
INTERFACE CONNECTOR
USP232B (Plate)
DGB9M/F
L-COM Adaptor
AMP
D-SUB 9(F)
6-66506-1
Male Pins
6-66506-1-ND
(24/22AWG)
ENCODER
REAR Chassis Connector
D-Sub 15
D-Sub 15
6-66506-1
Male Pins
6-66506-1-ND
RENISHAW READHEAD
RL32BAE050D30A
ABSOLUTE
ENCODER
CLK+, MA+
CLK-, MA-
ENC PWR (+5V)
ENC PWR (+5V)
DATA+, SLO+
DATA-, SLO-
GND
GND
N/C
10.0.xxx.xx
NETWORK
Cable Harness
MFG = Renishaw
Readhead Cable
3' Cable Length
Encoder
Tray Cable Harness
SR-BI-C22-FISMET MIRR4
SR:C22-FISMET-MIRR4:AX1-ENC1
MFG = FSC Global
FSC-S0000906
BLUE Jacket
GRN
BL NETWORK
Managed Switch
BL A1
PORT ?
BL NETWORK
PATCH MC23RG-E1
10.0.xxx.xx
PORT ?
C
LT-EL-SR-BI-SRD-2109-91
A
A-2
SHEET 7 OF 15

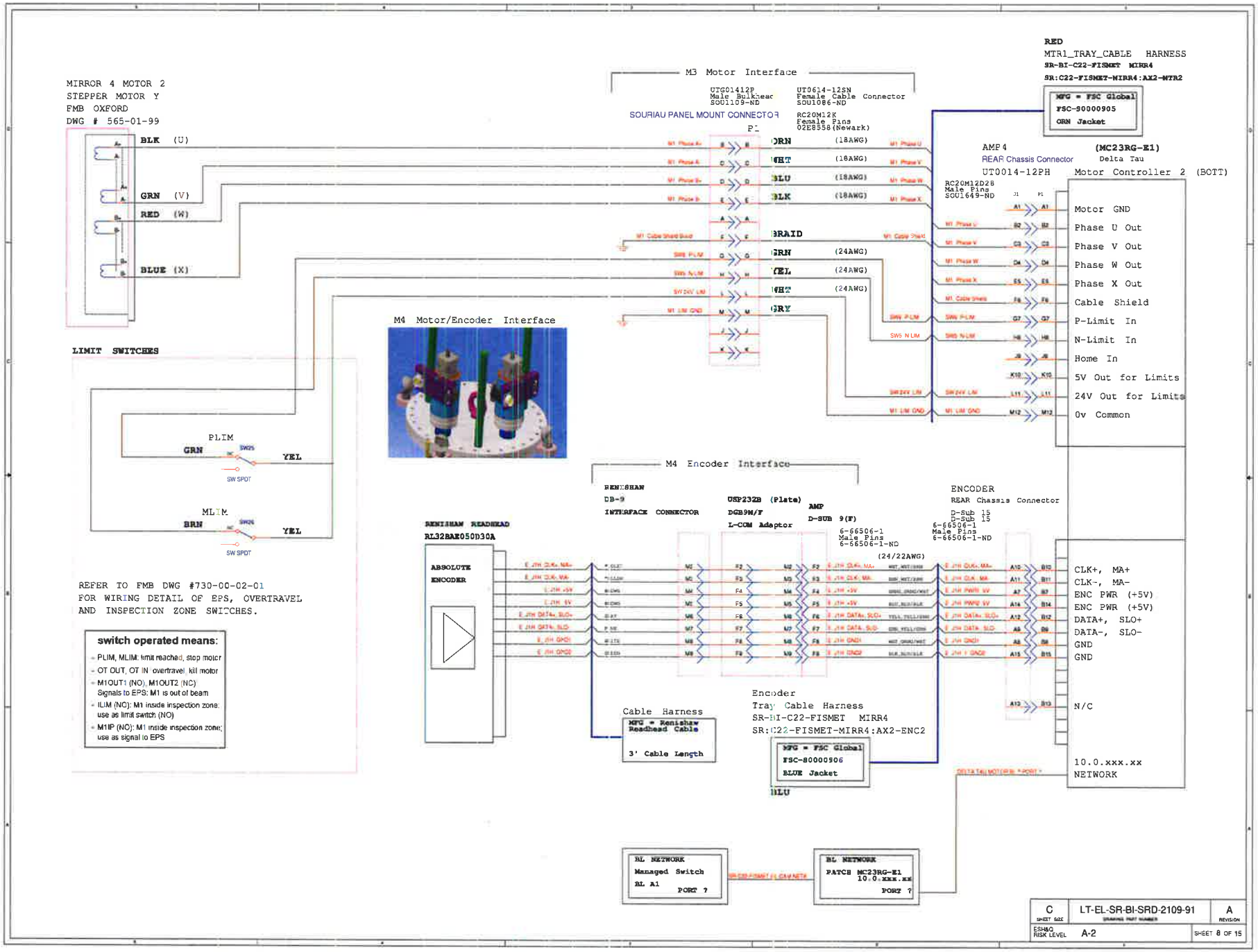
MIRROR 4 MOTOR 2
STEPPER MOTOR Y
FMB OXFORD
DWG # 565-01-99
BLK (U)
GRN (V)
RED (W)
BLUE (X)
M3 Motor Interface
UTG01412P
Male Bulkhead
SOU1109-ND
UT0614-12SN
Female Cable Connector
SOU1086-ND
SOURIAU PANEL MOUNT CONNECTOR
RC20M12K
Female Pins
02E8358(Newark)
ORN (18AWG)
WHT (18AWG)
BLU (18AWG)
BLK (18AWG)
BRAID
GRN (24AWG)
YEL (24AWG)
WHT (24AWG)
GRY
RED
MTR1_TRAY_CABLE HARNESS
SR-BI-C22-FISMET MIRR4
SR:C22-FISMET-MIRR4:AX2-MTR2
MFG = FSC Global
FSC-80000905
GRN Jacket
AMP 4
REAR Chassis Connector
UT0014-12PH
RC20M12D28
Male Pins
SOU1649-ND
(MC23RG-E1)
Delta Tau
Motor Controller 2 (BOTT)
Motor GND
Phase U Out
Phase V Out
Phase W Out
Phase X Out
Cable Shield
P-Limit In
N-Limit In
Home In
5V Out for Limits
24V Out for Limits
0v Common
LIMIT SWITCHES
PLIM
GRN
YEL
SW SPDT
MLIM
BRN
YEL
SW SPDT
M4 Motor/Encoder Interface
REFER TO FMB DWG #730-00-02-01
FOR WIRING DETAIL OF EPS, OVERTRAVEL
AND INSPECTION ZONE SWITCHES.
switch operated means:
PLIM, MLIM: limit reached, stop motor
OT OUT, OT IN: overtravel, kill motor
M1OUT1 (NO), M1OUT2 (NC): Signals to EPS: M1 is out of beam
ILIM (NC): M1 inside inspection zone; use as limit switch (NO)
M1IP (NO): M1 inside inspection zone; use as signal to EPS
M4 Encoder Interface
RENISHAW
DB-9
INTERFACE CONNECTOR
USP232B (Plate)
DGB9M/F
L-COM Adaptor
AMP
D-SUB 9(F)
6-66506-1
Male Pins
6-66506-1-ND
(24/22AWG)
ENCODER
REAR Chassis Connector
D-Sub 15
D-Sub 15
6-66506-1
Male Pins
6-66506-1-ND
RENISHAW READHEAD
RL32BAE050D30A
ABSOLUTE
ENCODER
CLK+, MA+
CLK-, MA-
ENC PWR (+5V)
ENC PWR (+5V)
DATA+, SLO+
DATA-, SLO-
GND
GND
N/C
10.0.xxx.xx
NETWORK
Cable Harness
MFG = Renishaw
Readhead Cable
3' Cable Length
Encoder
Tray Cable Harness
SR-BI-C22-FISMET MIRR4
SR:C22-FISMET-MIRR4:AX2-ENC2
MFG = FSC Global
FSC-80000906
BLUE Jacket
BLU
BL NETWORK
Managed Switch
BL A1
PORT ?
BL NETWORK
PATCH MC23RG-E1
10.0.xxx.xx
PORT ?
C
SHEET SIZE
LT-EL-SR-BI-SRD-2109-91
DRAWING PART NUMBER
A
REVISION
ESH&Q RISK LEVEL
A-2
SHEET 8 OF 15

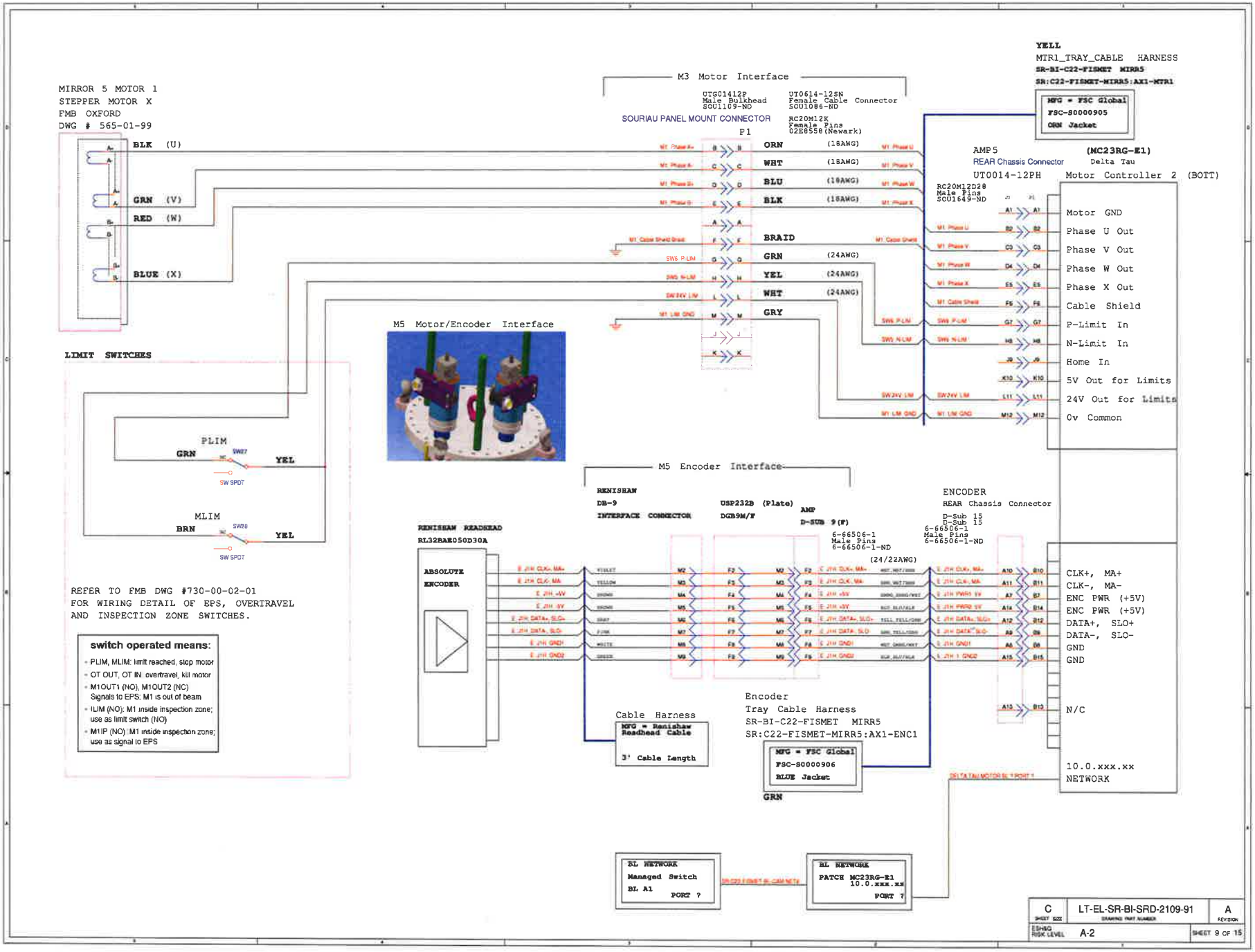
MIRROR 5 MOTOR 1
STEPPER MOTOR X
FMB OXFORD
DWG # 565-01-99
BLK (U)
GRN (V)
RED (W)
BLUE (X)
M3 Motor Interface
UTG01412P
Male Bulkhead
SO01109-ND
UT0614-12SN
Female Cable Connector
SO01086-ND
SOURIAU PANEL MOUNT CONNECTOR
RC20M12X
Female Pins
02E8558(Newark)
P1
ORN (18AWG)
WHT (18AWG)
BLU (18AWG)
BLK (18AWG)
BRAID
GRN (24AWG)
YEL (24AWG)
WHT (24AWG)
GRY
YELL
MTR1_TRAY_CABLE HARNESS
SR-BI-C22-FISMET MIRR5
SR:C22-FISMET-MIRR5:AX1-MTR1
MFG = FSC Global
FSC-S0000905
ORN Jacket
AMP5
REAR Chassis Connector
UT0014-12PH
(MC23RG-E1)
Delta Tau
Motor Controller 2 (BOTT)
RC20M12D28
Male Pins
SO01649-ND
Motor GND
Phase U Out
Phase V Out
Phase W Out
Phase X Out
Cable Shield
P-Limit In
N-Limit In
Home In
5V Out for Limits
24V Out for Limits
0v Common
M5 Motor/Encoder Interface
LIMIT SWITCHES
PLIM
GRN
YEL
SW7
SW SPDT
MLIM
BRN
YEL
SW28
SW SPDT
REFER TO FMB DWG #730-00-02-01
FOR WIRING DETAIL OF EPS, OVERTRAVEL
AND INSPECTION ZONE SWITCHES.
switch operated means:
PLIM, MLIM: limit reached, stop motor
OT OUT, OT IN: overtravel, kill motor
M1OUT1 (NO), M1OUT2 (NC)
Signals to EPS: M1 is out of beam
ILIM (NO): M1 inside inspection zone; use as limit switch (NO)
M1IP (NO): M1 inside inspection zone; use as signal to EPS
M5 Encoder Interface
RENISHAW
DB-9
INTERFACE CONNECTOR
USP232B (Plate)
DGB9M/F
AMP
D-SUB 9(F)
6-66506-1
Male Pins
6-66506-1-ND
(24/22AWG)
ENCODER
REAR Chassis Connector
D-Sub 15
D-Sub 15
6-66506-1
Male Pins
6-66506-1-ND
RENISHAW READHEAD
RL32BAE050D30A
ABSOLUTE
ENCODER
CLK+, MA+
CLK-, MA-
ENC PWR (+5V)
ENC PWR (+5V)
DATA+, SLO+
DATA-, SLO-
GND
GND
N/C
10.0.xxx.xx
NETWORK
Cable Harness
MFG = Renishaw
Readhead Cable
3' Cable Length
Encoder
Tray Cable Harness
SR-BI-C22-FISMET MIRR5
SR:C22-FISMET-MIRR5:AX1-ENC1
MFG = FSC Global
FSC-S0000906
BLUE Jacket
GRN
BL NETWORK
Managed Switch
BL A1
PORT ?
BL NETWORK
PATCH MC23RG-E1
10.0.xxx.xx
PORT 7
C
LT-EL-SR-BI-SRD-2109-91
A
A-2
SHEET 9 OF 15

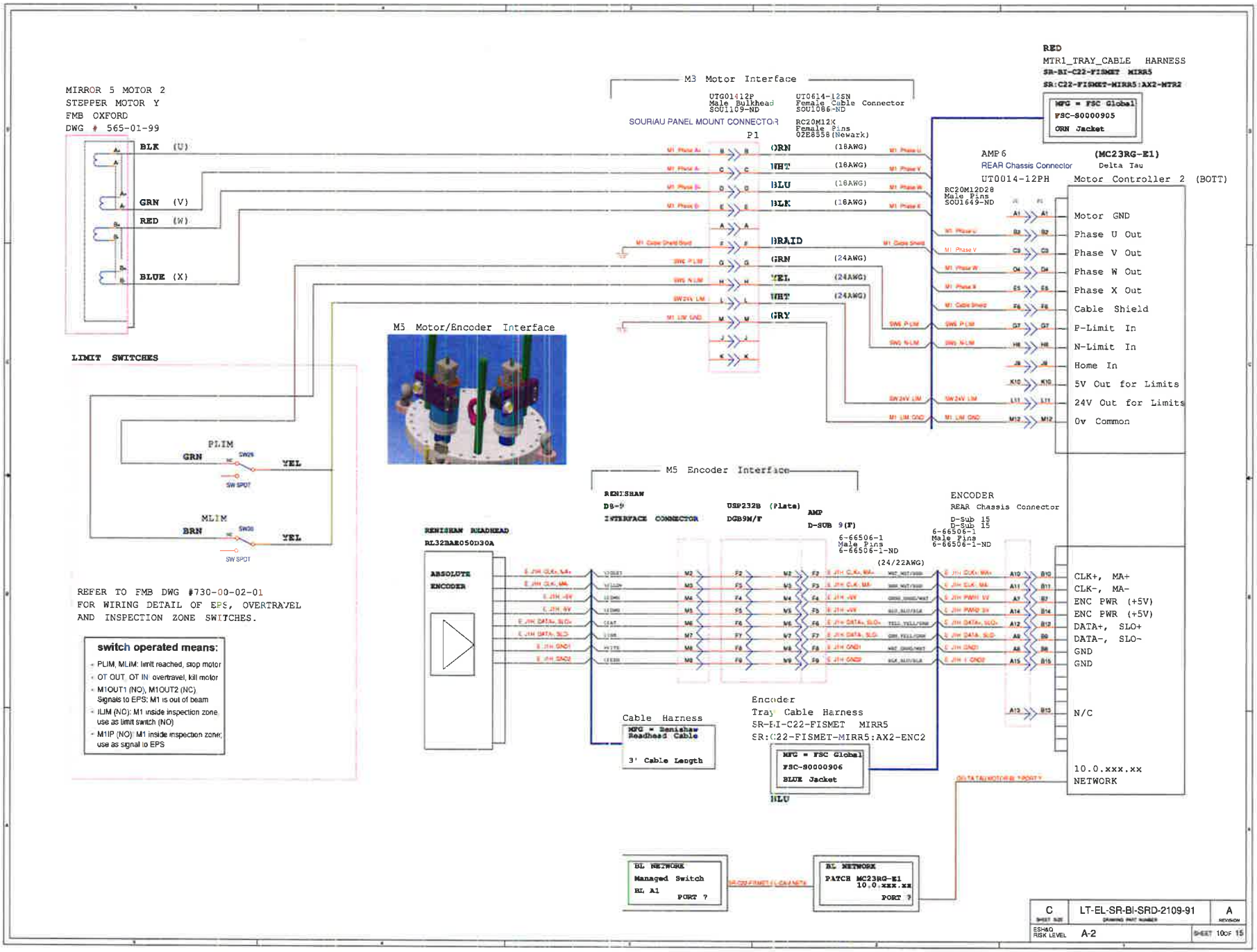
MIRROR 5 MOTOR 2
STEPPER MOTOR Y
FMB OXFORD
DWG # 565-01-99
BLK (U)
GRN (V)
RED (W)
BLUE (X)
M3 Motor Interface
UTG01412P
Male Bulkhead
SOU1109-ND
SOURIAU PANEL MOUNT CONNECTOR
P1
UT0614-12SN
Female Cable Connector
SOU1086-ND
RC20M12K
Female Pins
02E8558 (Newark)
ORN (18AWG)
WHT (18AWG)
BLU (18AWG)
BLK (18AWG)
BRAID
GRN (24AWG)
YEL (24AWG)
WHT (24AWG)
GRY
RED
MTR1_TRAY_CABLE HARNESS
SR-BI-C22-FISMET MIRR5
SR:C22-FISMET-MIRR5:AX2-MTR2
MFG = FSC Global
FSC-S0000905
ORN Jacket
AMP 6
REAR Chassis Connector
UT0014-12PH
RC20M12D28
Male Pins
SOU1649-ND
(MC23RG-E1)
Delta Tau
Motor Controller 2 (BOTT)
Motor GND
Phase U Out
Phase V Out
Phase W Out
Phase X Out
Cable Shield
P-Limit In
N-Limit In
Home In
5V Out for Limits
24V Out for Limits
0v Common
M5 Motor/Encoder Interface
LIMIT SWITCHES
PLIM
GRN
YEL
SW SPDT
MLIM
BRN
YEL
SW SPDT
REFER TO FMB DWG #730-00-02-01
FOR WIRING DETAIL OF EPS, OVERTRAVEL
AND INSPECTION ZONE SWITCHES.
switch operated means:
PLIM, MLIM: limit reached, stop motor
OT OUT, OT IN: overtravel, kill motor
M1OUT1 (NO), M1OUT2 (NC)
Signals to EPS: M1 is out of beam
ILIM (NC): M1 inside inspection zone, use as limit switch (NO)
M1IP (NO): M1 inside inspection zone; use as signal to EPS
M5 Encoder Interface
RENISHAW
DB-9
INTERFACE CONNECTOR
USP232B (Plate)
DGB9N/F
AMP
D-SUB 9(F)
6-66506-1
Male Pins
6-66506-1-ND
(24/22AWG)
ENCODER
REAR Chassis Connector
D-Sub 15
6-66506-1
Male Pins
6-66506-1-ND
RENISHAW READHEAD
RL32BAR050D30A
ABSOLUTE
ENCODER
CLK+, MA+
CLK-, MA-
ENC PWR (+5V)
ENC PWR (+5V)
DATA+, SLO+
DATA-, SLO-
GND
GND
N/C
10.0.xxx.xx
NETWORK
Cable Harness
MFG = Renishaw
Readhead Cable
3' Cable Length
Encoder
Tray Cable Harness
SR-BI-C22-FISMET MIRR5
SR:C22-FISMET-MIRR5:AX2-ENC2
MFG = FSC Global
FSC-S0000906
BLUE Jacket
BLU
BL NETWORK
Managed Switch
BL A1
PORT ?
BL NETWORK
PATCH MC23RG-E1
10.0.xxx.xx
PORT ?
C
LT-EL-SR-BI-SRD-2109-91
A
ESH&Q RISK LEVEL
A-2
SHEET 10 OF 15

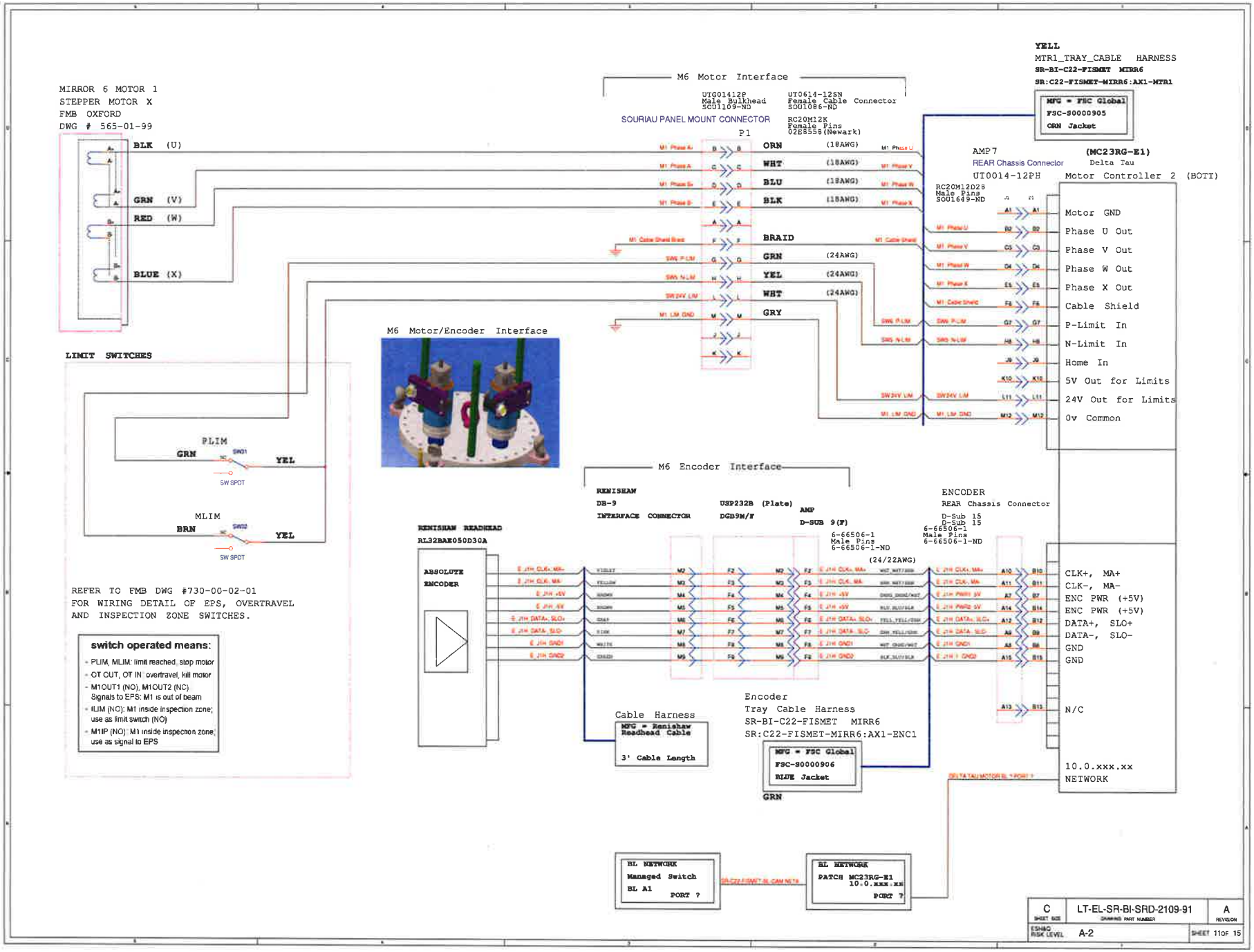
MIRROR 6 MOTOR 1
STEPPER MOTOR X
FMB OXFORD
DWG # 565-01-99
BLK (U)
GRN (V)
RED (W)
BLUE (X)
M6 Motor Interface
UTG01412P
Male Bulkhead
SOU1109-ND
UT0614-12SN
Female Cable Connector
SOU1086-ND
SOURIAU PANEL MOUNT CONNECTOR
RC20M12K
Female Pins
02B5558(Newark)
P1
ORN (18AWG)
WHT (18AWG)
BLU (18AWG)
BLK (18AWG)
BRAID
GRN (24AWG)
YEL (24AWG)
WHT (24AWG)
GRY
YELL
MTR1_TRAY_CABLE HARNESS
SR-BI-C22-FISMET MIRR6
SR:C22-FISMET-MIRR6:AX1-MTR1
MFG = FSC Global
FSC-S0000905
ORN Jacket
AMP7
REAR Chassis Connector
UT0014-12PH
RC20M12D28
Male Pins
SOU1649-ND
(MC23RG-E1)
Delta Tau
Motor Controller 2 (BOTT)
Motor GND
Phase U Out
Phase V Out
Phase W Out
Phase X Out
Cable Shield
P-Limit In
N-Limit In
Home In
5V Out for Limits
24V Out for Limits
0v Common
M6 Motor/Encoder Interface
LIMIT SWITCHES
PLIM
GRN
YEL
SW SPDT
MLIM
BRN
YEL
SW SPDT
REFER TO FMB DWG #730-00-02-01
FOR WIRING DETAIL OF EPS, OVERTRAVEL
AND INSPECTION ZONE SWITCHES.
switch operated means:
PLIM, MLIM: limit reached, stop motor
OT OUT, OT IN: overtravel, kill motor
M1OUT1 (NO), M1OUT2 (NC)
Signals to EPS: M1 is out of beam
ILIM (NC): M1 inside inspection zone; use as limit switch (NO)
M1IP (NO): M1 inside inspection zone; use as signal to EPS
M6 Encoder Interface
RENISHAW
DB-9
INTERFACE CONNECTOR
USP232B (Plate)
DGB9M/F
AMP
D-SUB 9(F)
6-66506-1
Male Pins
6-66506-1-ND
(24/22AWG)
ENCODER
REAR Chassis Connector
D-Sub 15
D-Sub 15
6-66506-1
Male Pins
6-66506-1-ND
RENISHAW READHEAD
RL32BAE050D30A
ABSOLUTE
ENCODER
CLK+, MA+
CLK-, MA-
ENC PWR (+5V)
ENC PWR (+5V)
DATA+, SLO+
DATA-, SLO-
GND
GND
N/C
10.0.xxx.xx
NETWORK
Cable Harness
MFG = Renishaw
Readhead Cable
3' Cable Length
Encoder
Tray Cable Harness
SR-BI-C22-FISMET MIRR6
SR:C22-FISMET-MIRR6:AX1-ENC1
MFG = FSC Global
FSC-S0000906
BLUE Jacket
GRN
BL NETWORK
Managed Switch
BL A1
PORT ?
BL NETWORK
PATCH MC23RG-E1
10.0.xxx.xx
PORT ?
C
LT-EL-SR-BI-SRD-2109-91
A
A-2
SHEET 11 OF 15

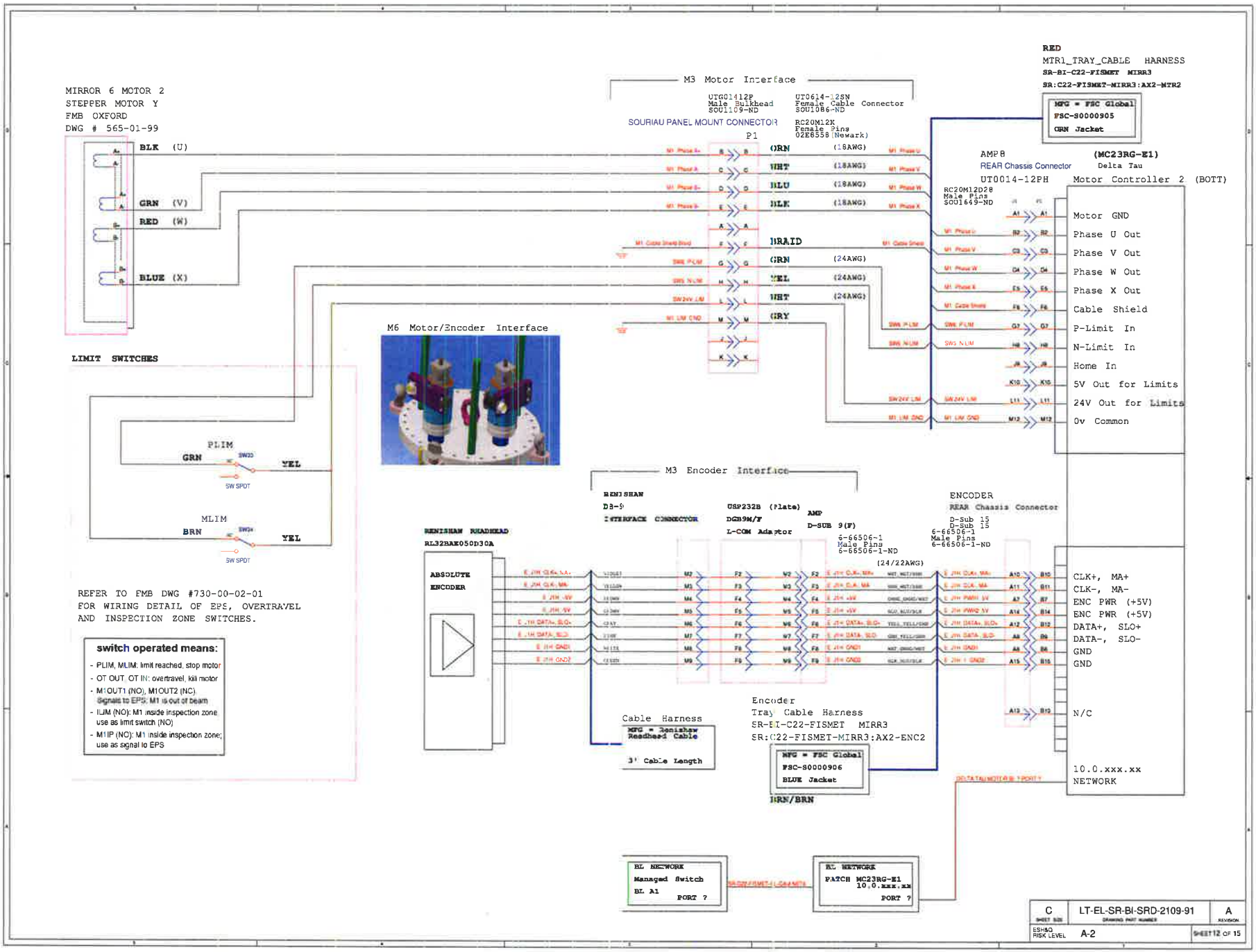
MIRROR 6 MOTOR 2
STEPPER MOTOR Y
FMB OXFORD
DWG # 565-01-99
BLK (U)
GRN (V)
RED (W)
BLUE (X)
M3 Motor Interface
UTG01412P
Male Bulkhead
SO01109-ND
UT0614-12SN
Female Cable Connector
SO01086-ND
SOURIAU PANEL MOUNT CONNECTOR
RC20M12X
Female Pins
02E6558 (Newark)
P1
ORN (18AWG)
WHT (18AWG)
BLU (18AWG)
BLK (18AWG)
BRAID
GRN (24AWG)
YEL (24AWG)
WHT (24AWG)
GRY
RED
MTR1_TRAY_CABLE HARNESS
SR-BI-C22-FISMET MIRR3
SR:C22-FISMET-MIRR3:AX2-MTR2
MFG = FSC Global
FSC-S0000905
GRN Jacket
AMP8
REAR Chassis Connector
UT0014-12PH
RC20M12D28
Male Pins
SO01649-ND
(MC23RG-E1)
Delta Tau
Motor Controller 2 (BOTT)
Motor GND
Phase U Out
Phase V Out
Phase W Out
Phase X Out
Cable Shield
P-Limit In
N-Limit In
Home In
5V Out for Limits
24V Out for Limits
0v Common
LIMIT SWITCHES
PLIM
GRN
YEL
SW SPDT
MLIM
BRN
YEL
SW SPDT
M6 Motor/Encoder Interface
REFER TO FMB DWG #730-00-02-01
FOR WIRING DETAIL OF EPS, OVERTRAVEL
AND INSPECTION ZONE SWITCHES.
switch operated means:
- PLIM, MLIM: limit reached, stop motor
- OT OUT, OT IN: overtravel, kill motor
- M1OUT1 (NO), M1OUT2 (NC): Signals to EPS; M1 is out of beam
- ILIM (NO): M1 inside inspection zone; use as limit switch (NO)
- M1IP (NC): M1 inside inspection zone; use as signal to EPS
M3 Encoder Interface
RENISHAW
DB-9
INTERFACE CONNECTOR
USP232B (Plate)
DGB9M/F
L-COM Adaptor
AMP
D-SUB 9(F)
6-66506-1
Male Pins
6-66506-1-ND
(24/22AWG)
ENCODER
REAR Chassis Connector
D-Sub 15
D-Sub 15
6-66506-1
Male Pins
6-66506-1-ND
RENISHAW READHEAD
RL32BAK050D30A
ABSOLUTE
ENCODER
CLK+, MA+
CLK-, MA-
ENC PWR (+5V)
ENC PWR (+5V)
DATA+, SLO+
DATA-, SLO-
GND
GND
N/C
10.0.xxx.xx
NETWORK
Cable Harness
MFG = Renishaw
Readhead Cable
3' Cable Length
Encoder
Tray Cable Harness
SR-BI-C22-FISMET MIRR3
SR:C22-FISMET-MIRR3:AX2-ENC2
MFG = FSC Global
FSC-S0000906
BLUE Jacket
BRN/BRN
EL NETWORK
Managed Switch
EL A1
PORT ?
EL NETWORK
PATCH MC23RG-E1
10.0.xxx.xx
PORT ?
C
LT-EL-SR-BI-SRD-2109-91
A
ESH&Q RISK LEVEL
A-2
SHEET 12 OF 15

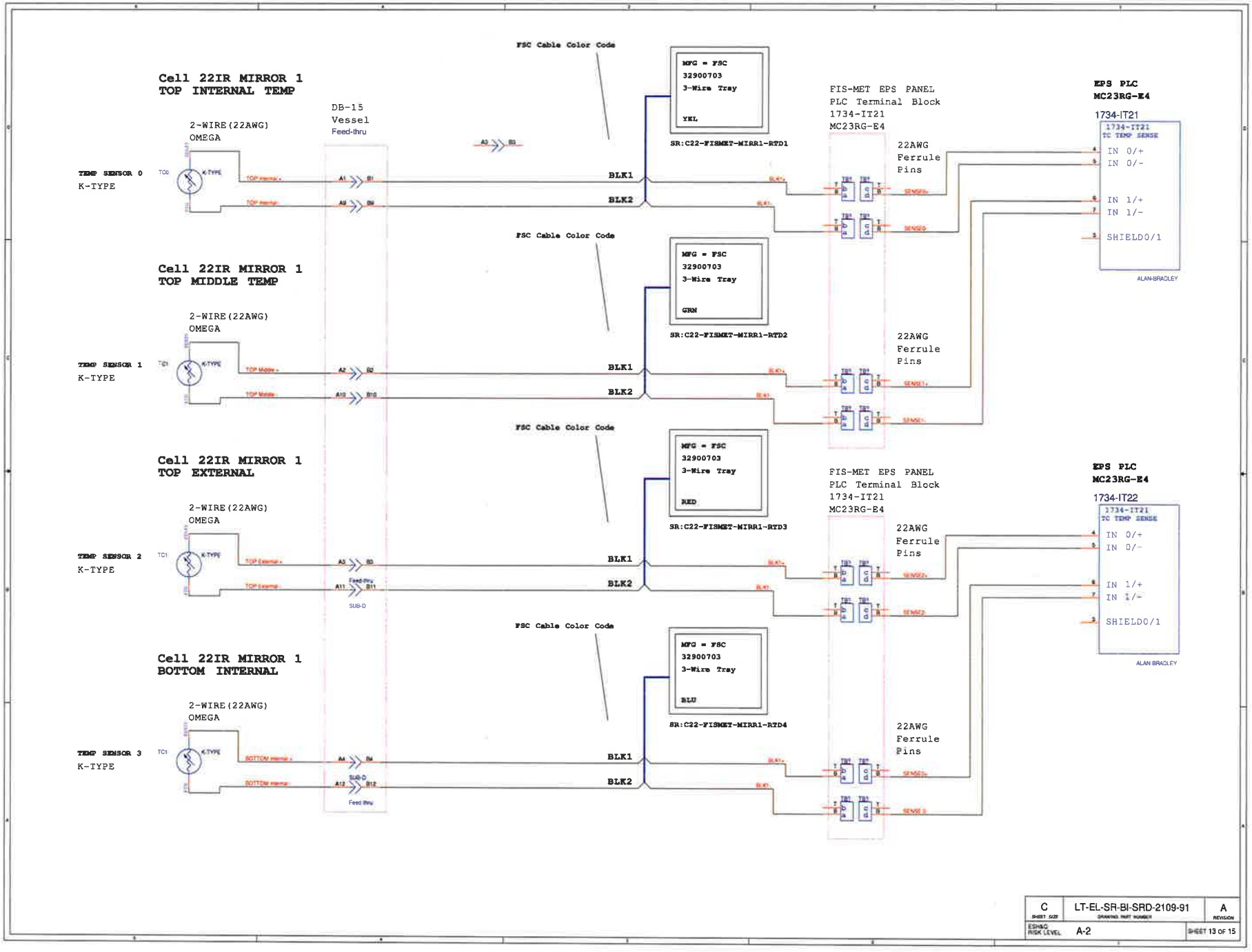

C	LT-EL-SR-BI-SRD-2109-91	A
SHEET SIZE	DRAWING PART NUMBER	REVISION
ESH&Q RISK LEVEL A-2		SHEET 13 OF 15

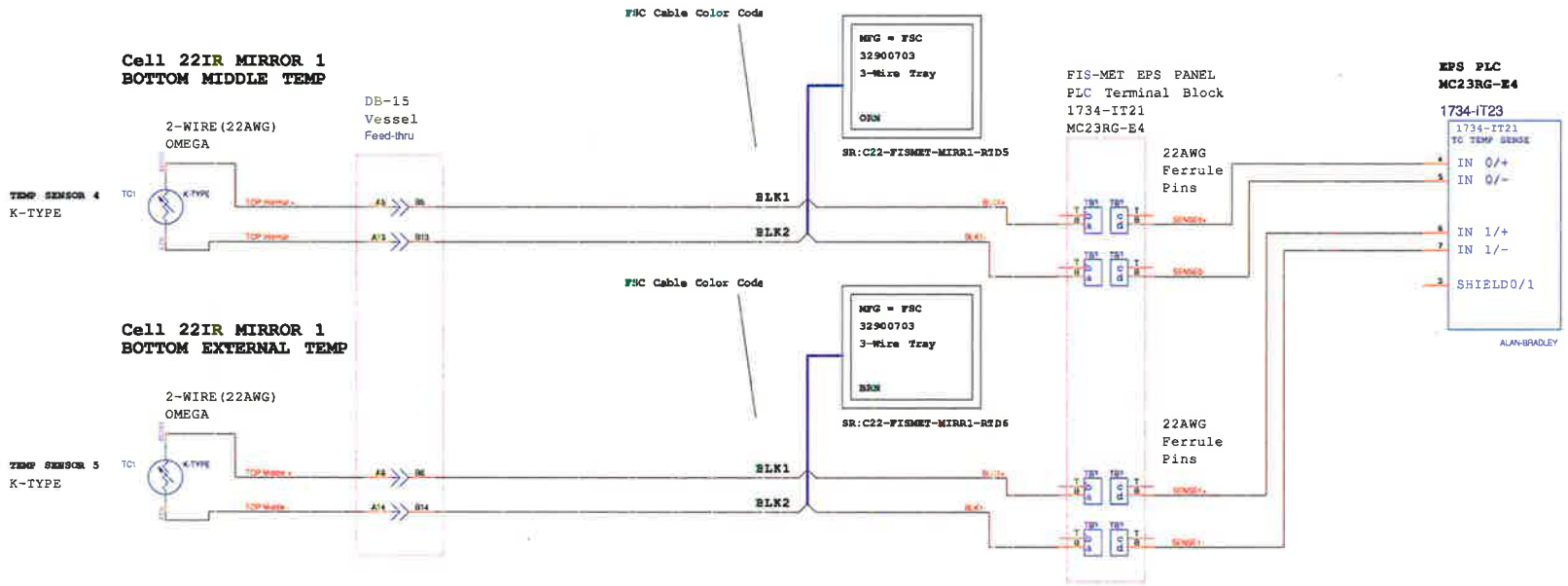

MIRROR 1 THERMOCOUPLES

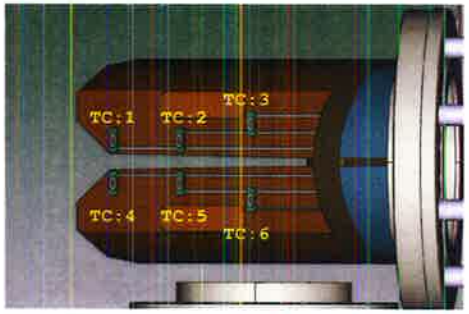

C SHEET SIZE	LT-EL-SR-BI-SRD-2109-91 DRAWING PART NUMBER	A REVISION
ES&HQ RISK LEVEL A-2		SHEET 14 OF 15

GPIO INTERFACE CABLE FOR MOTOR CONTROLLER

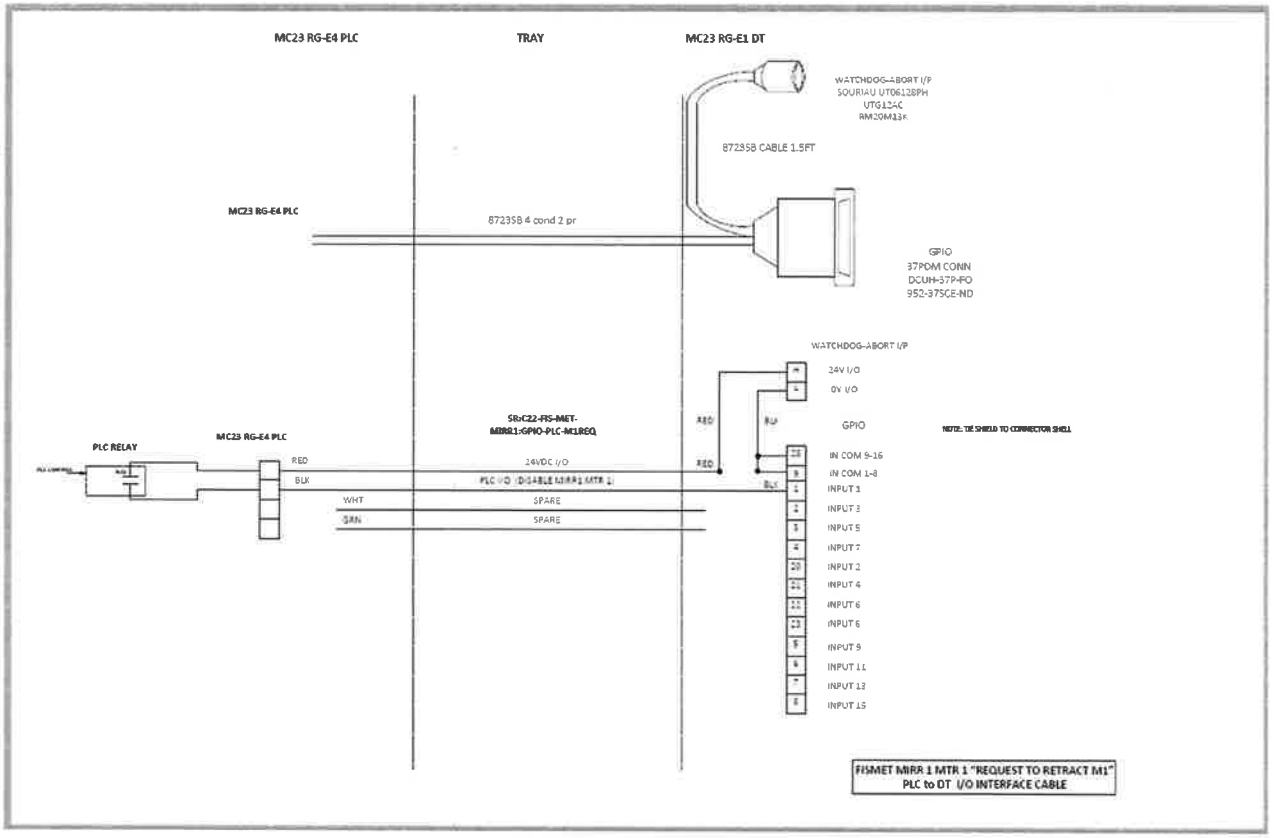

C SHEET SIZE	LT-EL-SR-BI-SRD-2109-91 DRAWING PART NUMBER	A REVISION
ESH&Q RISK LEVEL A-2		SHEET 15 OF 15

CABLE PULL SHEET	NSLS II NATIONAL SYNCHROTRON LIGHT SOURCE II	CP-LT-EL-SR-BI-SRD-2109-91	REVISION A	SHEET 2 OF 2
		USED ON DWG. NO: LT-EL-SR-BI-SRD-2109-91	DATE 5/16/2018	

Cell 22 FIS-MET
5/8/2018
TUNNEL

DEVICE (To Floor plus 2M)	Bundle Name	Cable label	Cable Type	Device Name	Tunnel	Color Code FSC Orn/Blue	Rack Location (Rack To Floor)	Controller	Offset Conduit ID
SR Cell 22 FIS-MET Mirror 1									
SR-C22 FISMET-MIRR1-MTR	**SR-BI-:C22-FISMET MIRR1**	SR:C22-FISMET-MIRR1:INS-LIM	8723SB	Insert LIM	Granite Supp	GREEN/GREEN	MC23-RG-E1	N/A	MC23-OCB-1
C22-Dipole		SR:C22-FISMET-MIRR1:CAM:NET	2424	MIRR1 CAM	Granite Supp	RED/RED	MC23-RG-E1	N/A	MC23-OCB-1
		SR:C22-FISMET-MIRR1:ILLUM	8723SB	MIRR1 ILLUM	Granite Supp	BLUE/BLUE	MC23-RG-E1	PLC ANA	MC23-OCB-1
		SR:C22-FISMET-MIRR1:AX1-MTR 1	FSC-Orng	MIRR1 MTR1	Granite Supp	ORANGE/ORANGE	MC23-RG-E1	Delta Tau 1-1	MC23-OCB-3
		SR:C22-FISMET-MIRR1:AX1-ENC 1	FSC-BLU	MIRR1 ENCDR1	Granite Supp	BROWN/BROWN	MC23-RG-E1	Delta Tau 1-1	MC23-OCB-1
		SR:C22-FISMET-MIRR1-RTD1	FSC 3-Wire	MIRR1 TEMP1	Granite Supp	YELLOW	MC23-RG-E1	PLC RTD0	MC23-OCB-1
		SR:C22-FISMET-MIRR1-RTD2	FSC 3-Wire	MIRR1 TEMP2	Granite Supp	GREEN	MC23-RG-E1	PLC RTD1	MC23-OCB-1
		SR:C22-FISMET-MIRR1-RTD3	FSC 3-Wire	MIRR1 TEMP3	Granite Supp	RED	MC23-RG-E1	PLC RTD2	MC23-OCB-1
		SR:C22-FISMET-MIRR1-RTD4	FSC 3-Wire	MIRR1 TEMP4	Granite Supp	BLUE	MC23-RG-E1	PLC RTD3	MC23-OCB-1
		SR:C22-FISMET-MIRR1-RTD5	FSC 3-Wire	MIRR1 TEMP5	Granite Supp	ORANGE	MC23-RG-E1	PLC RTD4	MC23-OCB-1
		SR:C22-FISMET-MIRR1-RTD6	FSC 3-Wire	MIRR1 TEMP6	Granite Supp	BROWN	MC23-RG-E1	PLC RTD5	MC23-OCB-1
SR Cell 22 FIS-MET Mirror 2									
SR-C22 FISMET-MIRR2-MTR	**SR-BI-:C22-FISMET MIRR2**	SR:C22-FISMET-MIRR2:CAM:NET	2424	MIRR2 CAM	Frame Supp	RED/RED	MC23-RG-E1	N/A	MC23-OCB-1
C22-Dipole		SR:C22-FISMET-MIRR2:ILLUM	8723SB	MIRR2 ILLUM	Frame Supp	BLUE/BLUE	MC23-RG-E1	PLC ANA	MC23-OCB-1
		SR:C22-FISMET-MIRR2:AX1-MTR 1	FSC-Orng	MIRR2 MTR1	Frame Supp	YELLOW	MC23-RG-E1	Delta Tau 1-2	MC23-OCB-3
		SR:C22-FISMET-MIRR2:AX1-ENC 1	FSC-BLU	MIRR2 ENCDR1	Frame Supp	GREEN	MC23-RG-E1	Delta Tau 1-2	MC23-OCB-1
		SR:C22-FISMET-MIRR2:AX2-MTR 2	FSC-Orng	MIRR2 MTR2	Frame Supp	RED	MC23-RG-E1	Delta Tau 1-3	MC23-OCB-3
		SR:C22-FISMET-MIRR2:AX2-ENC 2	FSC-BLU	MIRR2 ENCDR2	Frame Supp	BLUE	MC23-RG-E1	Delta Tau 1-3	MC23-OCB-1
		SR:C22-FISMET-MIRR2:AX3-MTR 3	FSC-Orng	MIRR2 MTR3	Frame Supp	ORANGE	MC23-RG-E1	Delta Tau 1-4	MC23-OCB-3
		SR:C22-FISMET-MIRR2:AX3-ENC 3	FSC-BLU	MIRR2 ENCDR3	Frame Supp	BROWN	MC23-RG-E1	Delta Tau 1-4	MC23-OCB-1
SR Cell 22 FIS-MET Mirror 3									
SR-C22 FISMET-MIRR3-MTR	**SR-BI-:C22-FISMET MIRR3**	SR:C22-FISMET-MIRR3:CAM:NET	2424	MIRR3 CAM	Frame Supp	RED/RED	MC23-RG-E1	N/A	MC23-OCB-1
C22-Dipole		SR:C22-FISMET-MIRR3:ILLUM	8723SB	MIRR3 ILLUM	Frame Supp	BLUE/BLUE	MC23-RG-E1	PLC ANA	MC23-OCB-1
		SR:C22-FISMET-MIRR3:AX1-MTR 1	FSC-Orng	MIRR3 MTR1	Frame Supp	YELLOW	MC23-RG-E1	Delta Tau 1-5	MC23-OCB-3
		SR:C22-FISMET-MIRR3:AX1-ENC 1	FSC-BLU	MIRR3 ENCDR1	Frame Supp	GREEN	MC23-RG-E1	Delta Tau 1-5	MC23-OCB-1
		SR:C22-FISMET-MIRR3:AX2-MTR 2	FSC-Orng	MIRR3 MTR2	Frame Supp	RED	MC23-RG-E1	Delta Tau 1-6	MC23-OCB-3
		SR:C22-FISMET-MIRR3:AX2-ENC 2	FSC-BLU	MIRR3 ENCDR2	Frame Supp	BLUE	MC23-RG-E1	Delta Tau 1-6	MC23-OCB-1
SR Cell 22 FIS-MET Mirror 4									
SR-C22 FISMET-MIRR4-MTR	**SR-BI-:C22-FISMET MIRR4**	SR:C22-FISMET-MIRR4:CAM:NET	2424	MIRR4 CAM	Frame Supp	RED/RED	MC23-RG-E1	N/A	MC23-OCB-1
C22-Dipole		SR:C22-FISMET-MIRR4:ILLUM	8723SB	MIRR4 ILLUM	Frame Supp	BLUE/BLUE	MC23-RG-E1	PLC ANA	MC23-OCB-1
		SR:C22-FISMET-MIRR4:AX1-MTR 1	FSC-Orng	MIRR4 MTR1	Frame Supp	YELLOW	MC23-RG-E1	Delta Tau 1-7	MC23-OCB-3
		SR:C22-FISMET-MIRR4:AX1-ENC 1	FSC-BLU	MIRR4 ENCDR1	Frame Supp	GREEN	MC23-RG-E1	Delta Tau 1-7	MC23-OCB-1
		SR:C22-FISMET-MIRR4:AX2-MTR 2	FSC-Orng	MIRR4 MTR2	Frame Supp	RED	MC23-RG-E1	Delta Tau 1-8	MC23-OCB-3
		SR:C22-FISMET-MIRR4:AX2-ENC 2	FSC-BLU	MIRR4 ENCDR2	Frame Supp	BLUE	MC23-RG-E1	Delta Tau 1-8	MC23-OCB-1
SR Cell 22 FIS-MET Mirror 5	~~INSTALL ON HOLD~~								
SR-C22 FISMET-MIRR5-MTR	**SR-BI-:C22-FISMET MIRR5**	SR:C22-FISMET-MIRR5:CAM:NET	2424	MIRR5 CAM	Frame Supp	RED/RED	MC23-RG-E1	N/A	MC23-OCB-1
HUTCH		SR:C22-FISMET-MIRR5:ILLUM	8723SB	MIRR5 ILLUM	Frame Supp	BLUE/BLUE	MC23-RG-E1	PLC ANA	MC23-OCB-1
		SR:C22-FISMET-MIRR5:AX1-MTR 1	FSC-Orng	MIRR5 MTR1	Frame Supp	YELLOW	MC23-RG-E1	Delta Tau 2-1	MC23-OCB-3
		SR:C22-FISMET-MIRR5:AX1-ENC 1	FSC-BLU	MIRR5 ENCDR1	Frame Supp	GREEN	MC23-RG-E1	Delta Tau 2-1	MC23-OCB-1
		SR:C22-FISMET-MIRR5:AX2-MTR 2	FSC-Orng	MIRR5 MTR2	Frame Supp	RED	MC23-RG-E1	Delta Tau 2-2	MC23-OCB-3
		SR:C22-FISMET-MIRR4:AX2-ENC 2	FSC-BLU	MIRR5 ENCDR2	Frame Supp	BLUE	MC23-RG-E1	Delta Tau 2-2	MC23-OCB-1
SR Cell 22 FIS-MET Mirror 6	~~INSTALL ON HOLD~~								
SR-C22 FISMET-MIRR6-MTR	**SR-BI-:C22-FISMET MIRR6**	SR:C22-FISMET-MIRR6:CAM:NET	2424	MIRR6 CAM	Frame Supp	RED/RED	MC23-RG-E1	N/A	MC23-OCB-1
HUTCH		SR:C22-FISMET-MIRR6:ILLUM	8723SB	MIRR6 ILLUM	Frame Supp	BLUE/BLUE	MC23-RG-E1	PLC ANA	MC23-OCB-1
		SR:C22-FISMET-MIRR6:AX1-MTR 1	FSC-Orng	MIRR6 MTR1	Frame Supp	YELLOW	MC23-RG-E1	Delta Tau 2-3	MC23-OCB-3
		SR:C22-FISMET-MIRR6:AX1-ENC 1	FSC-BLU	MIRR6 ENCDR1	Frame Supp	GREEN	MC23-RG-E1	Delta Tau 2-3	MC23-OCB-1
		SR:C22-FISMET-MIRR6:AX2-MTR 2	FSC-Orng	MIRR6 MTR2	Frame Supp	RED	MC23-RG-E1	Delta Tau 2-4	MC23-OCB-3
		SR:C22-FISMET-MIRR6:AX2-ENC 2	FSC-BLU	MIRR6 ENCDR2	Frame Supp	BLUE	MC23-RG-E1	Delta Tau 2-4	MC23-OCB-1

CABLE PULL SHEET	NSLS II NATIONAL SYNCHROTRON LIGHT SOURCE II	CP-LT-EL-SR-BI-SRD-2109-91		REVISION	SHEET
				A	1 OF 2
		USED ON DWG. NO:		DATE	
		LT-EL-SR-BI-SRD-2109-91		5/16/2018	
TITLE		PREPARED BY	DATE	CHECKED BY	DATE
CABLE PULL SHEET SR FE MIRROR, 22-IR (FIS/MET) MIRROR MTR CTRL I/F WITH LIMITS ENCODER MIRROR		J. Bohenek	5/16/2018	J. Malley	5/18/2018
		ENGINEER APPROVAL	DATE	QUALITY APPROVAL	DATE
		D.Padrazo	6/11/2018	E. Cheswick	6/28/2018
		SUPERVISOR APPROVAL	DATE	ES&H APPROVAL	DATE
		D.Padrazo	6/11/2018	B. Lee	6/28/2018

REVISIONS

REV	DESCRIPTION	DRAWN BY	DATE	CHK.	APP.
A	INITIAL RELEASE	J. Bohenek	5/16/2018	JM	DP

REV	DESCRIPTION	BY	DATE	CHK	APP
A	INITIAL RELEASE	SEJ	10/11/2018	JM	DP

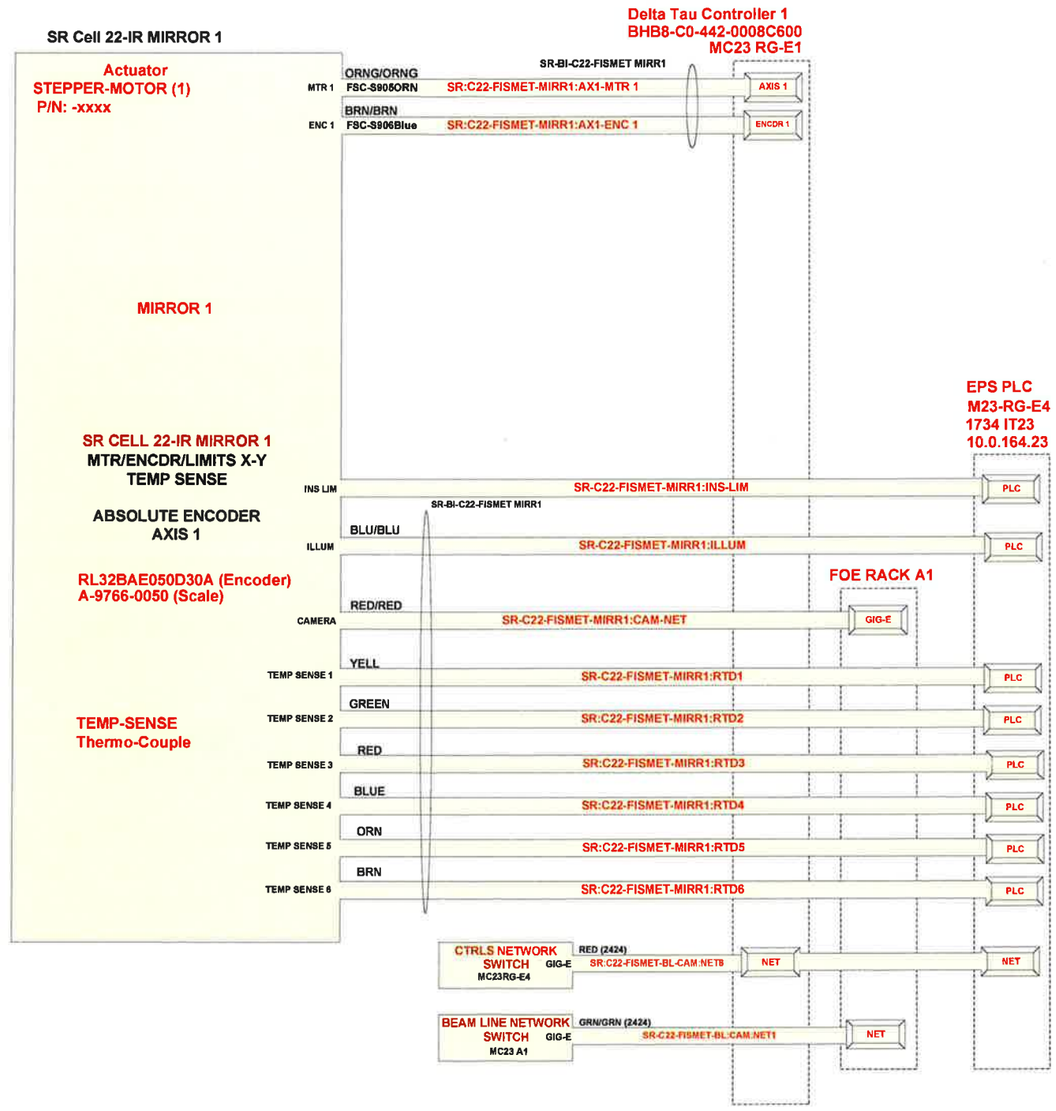

BROOKHAVEN NATIONAL LABORATORY

UNLESS OTHERWISE SPECIFIED
INTEGER TOLERANCES
± .25
DECIMAL TOLERANCES
.X ± .200
.XX ± .015
.XXX ± .010
ANGULAR TOLERANCE ± 0.5°
UNSPECIFIED RADII .32 MAX.
125 BREAK SHARP CORNERS AND EDGES
FINISH MAX. RD MIN. DIS

BROOKHAVEN NATIONAL LABORATORY
DIRECT INQUIRIES, ABOUT THIS DRAWING TO:
PROPRIETARY NOTICE

		DATE
DRWN BY	S JAYAMOHAN	10/11/2018
CHK BY	J WALLEY	10/11/2018
ENG APP	D PADRAZO	10/11/2018
SUPV APP	D PADRAZO	10/11/2018
QA APP	E CHESNER	10/11/2018
CSI APP	R LEE	10/11/2018

ESH&Q RISK LEVEL A-2

NSLS II NATIONAL SYNCHROTRON LIGHT SOURCE II

BLOCK DIAGRAM,
SR FE MIRROR 1-6
22-IR (FIS/MET)

LT-EL-SR-BI
LT-EL-SR-BI-SRD-2109-89
A
COMPUTER REPRODUCABLE
SCALE NA
SHEET 1 OF 8

LT-EL-SR-BI-SRD-2109-89

REV	DESCRIPTION	BY	DATE	CHK	APP
	SEE SHEET 1				

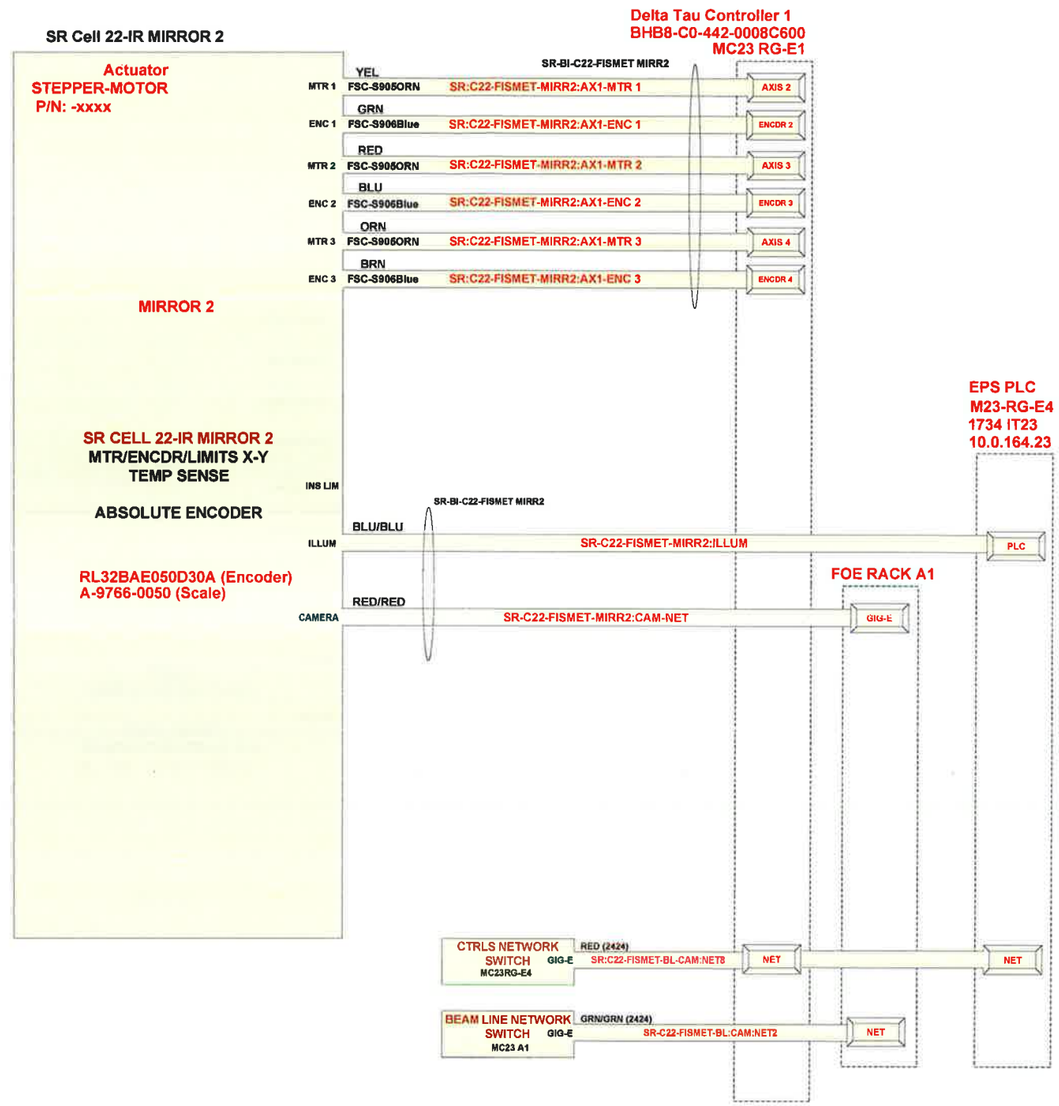

LT-EL-SR-BI-SRD-2109-89

LT-EL-SR-BI	LT-EL-SR-BI-SRD-2109-89	A
COMPUTER REPRODUCABLE	SCALE: N/A	SHEET 2 of 4

REV	DESCRIPTION	BY	DATE	CHK	APP
	SEE SHEET 1				

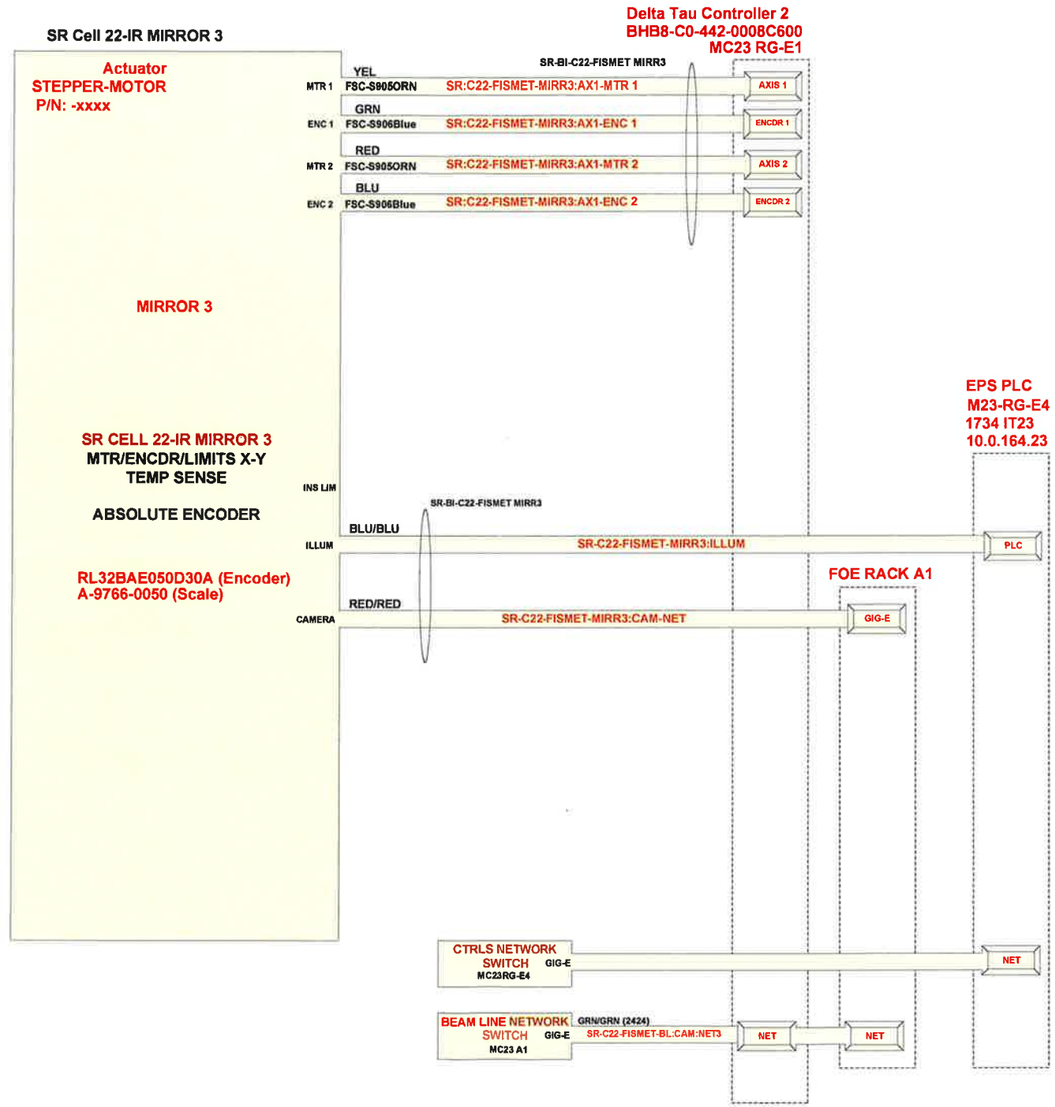

LT-EL-SR-BI	LT-EL-SR-BI-SRD-2109-89	A
COMPUTER REPRODUCABLE	SCALE: N/A	SHEET 3 OF 8

REV	DESCRIPTION	BY	DATE	CHK	APP
	SEE SHEET 1				

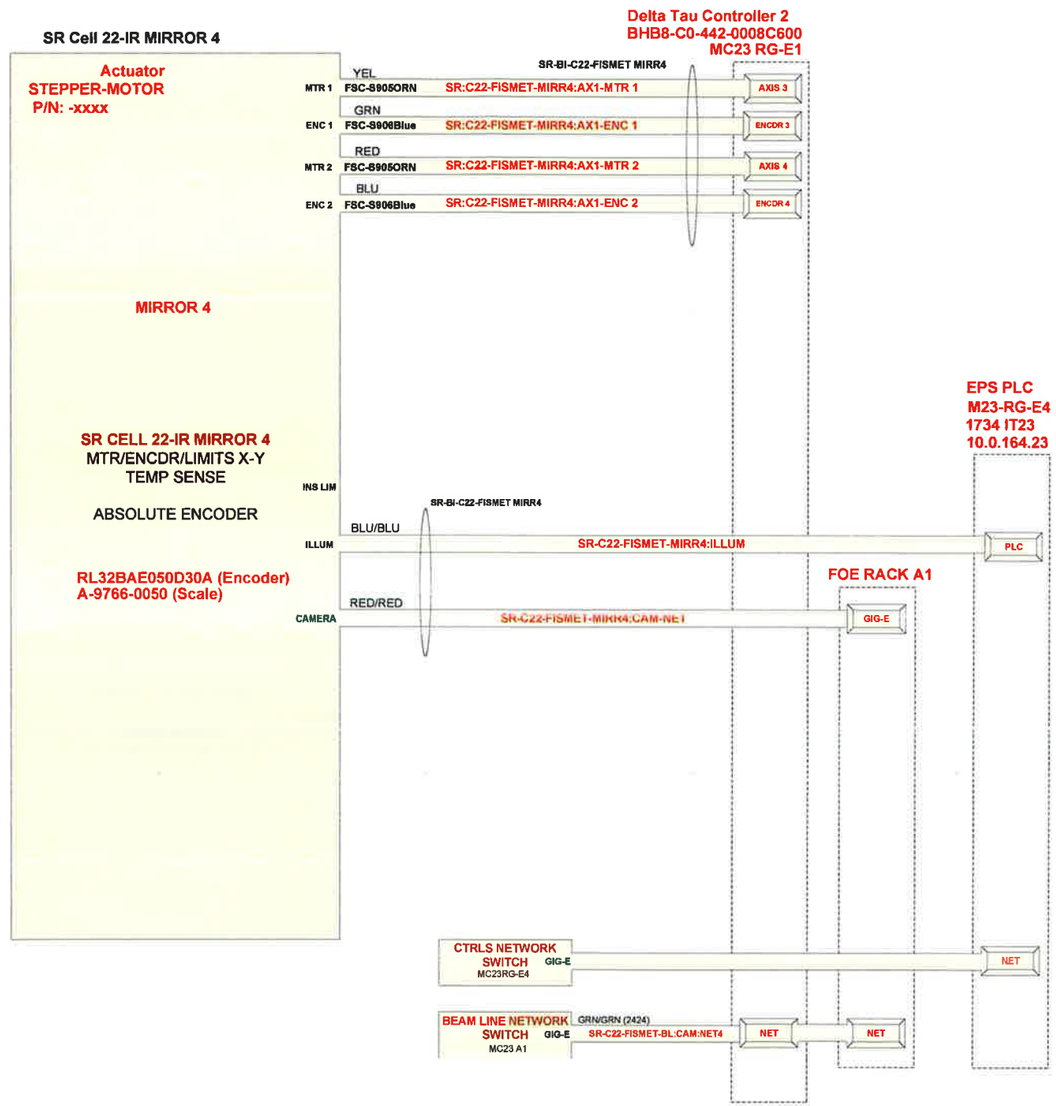

LT-EL-SR-BI	LT-EL-SR-BI-SRD-2109-89	A
COMPUTER REPRODUCABLE		

REV	DESCRIPTION	BY	DATE	CHK	APP
	SEE SHEET 1				

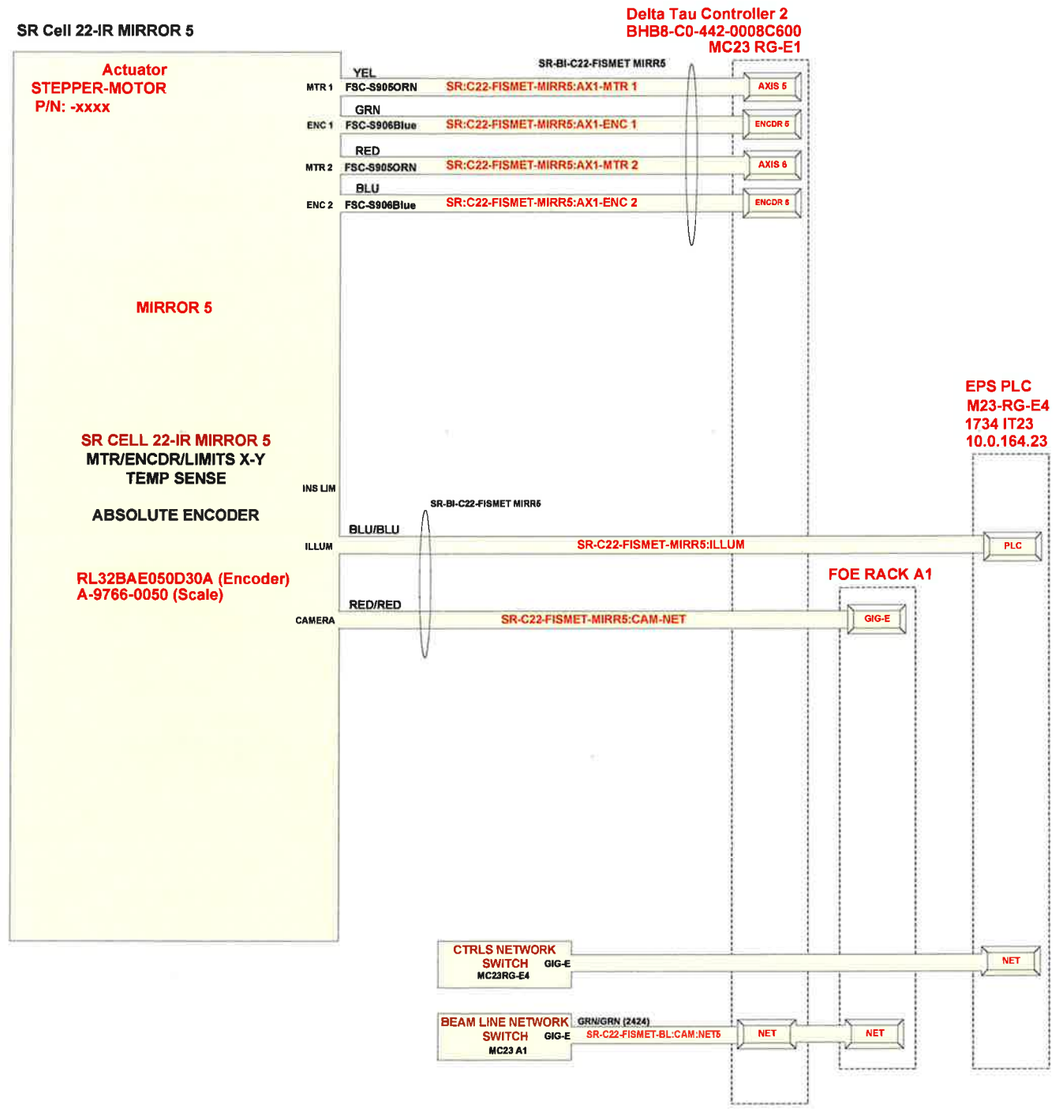

LT-EL-SR-BI	LT-EL-SR-BI-SRD-2109-89	A
COMPUTER REPRODUCABLE		

LT-EL-SR-BI-SRD-2109-89

REV	DESCRIPTION	BY	DATE	CHK	APP
	SEE SHEET 1				

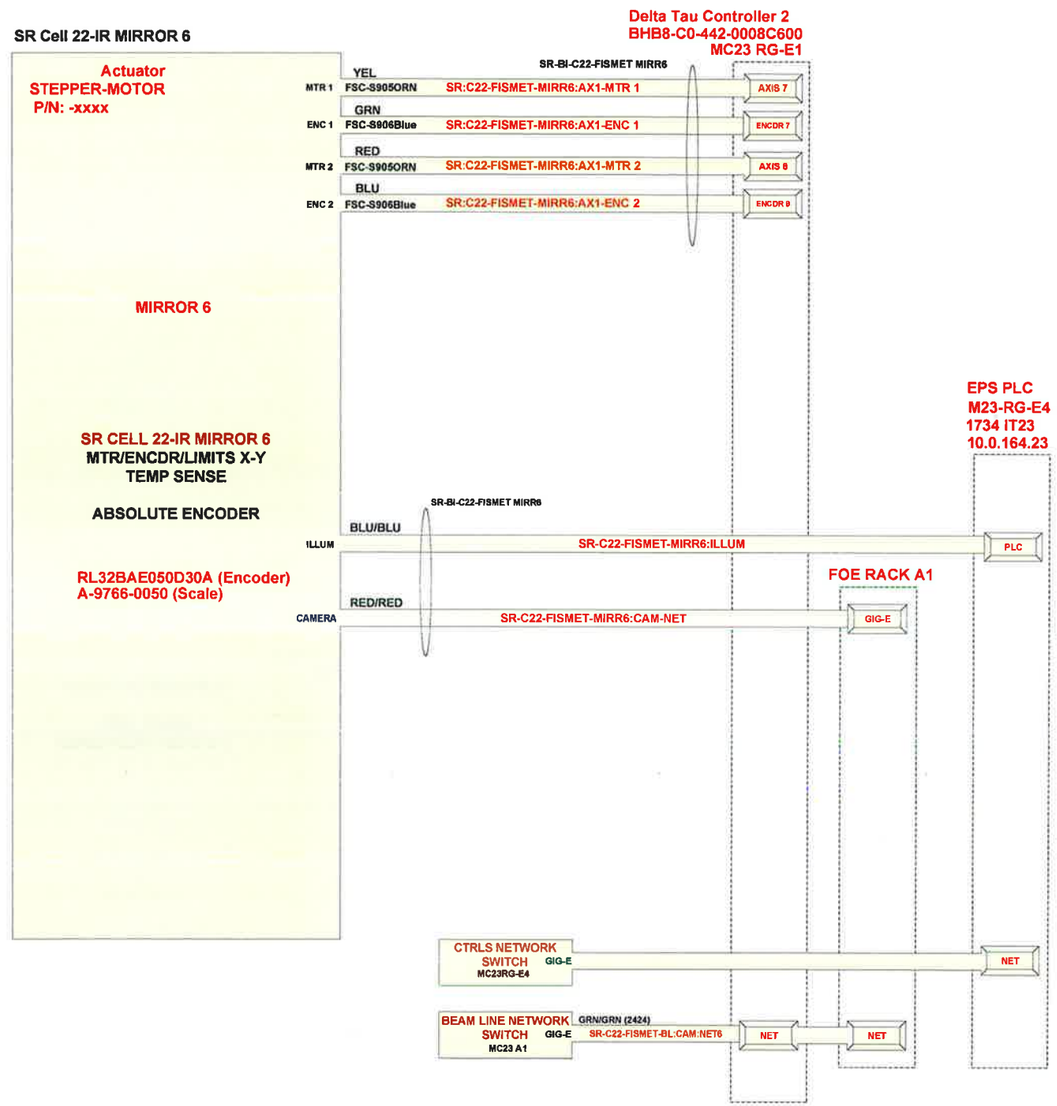

LT-EL-SR-BI	LT-EL-SR-BI-SRD-2109-89	A
COMPUTER REPRODUCABLE		

LT-EL-SR-BI-SRD-2109-89