NSLS II 22-IR UHVOE FIS/MET ERR Accelerator - Equipment Protection System Documents List
G. Ganetis 10/10/2018

Beam Line __ NSLS II 22-IR UHVOE FIS/MET_____

The following list represents the documents that summarize the review for the Accelerator Equipment Protection System for NSLS II 22-IR UHVOE FIS/MET

Document Description	**Documents Files**		**Comments**
Logic Diagram EPS LOGIC DIAGRAM, 22-IR (FIS/MET)	LT-EL-BL-EI-EPS-1220-96_REV-B.pdf		Overall basic logic diagram for Accelerator EPS for 22-IR Mirror position and temperature interlocks.
Electrical Schematics EPS WIRING DIAGRAM, 22-IR (FIS/MET)	LT-EL-BL-EI-EPS-1220-95_REV-		
Test report	cell 22IR FIS_MET 9_26_2018.pdf		This report covers the EPS for the Accelerator portion of the 22-IR mirror system. It includes the vacuum valve interlock for M1 position and temperature interlocks.
Accelerator -EPS Program Stored (PLC located in Cell 22 EPS chassis)	LT-EL-SR-EI-EPS-0123-70_REV-C.pdf		Drawing represents the storing of the PLC program in the Electrical Design room.

REV	DESCRIPTION	DATE	BY	CHECKED	APP
A	INITIAL RELEASE	7/18/2018	SEJ	JM	AC
B	REVISED PER ECN LT-ECN-018-2030	8/31/2018	SEJ	JM	AC

22-IR (FIS / MET) LOGIC DIAGRAM

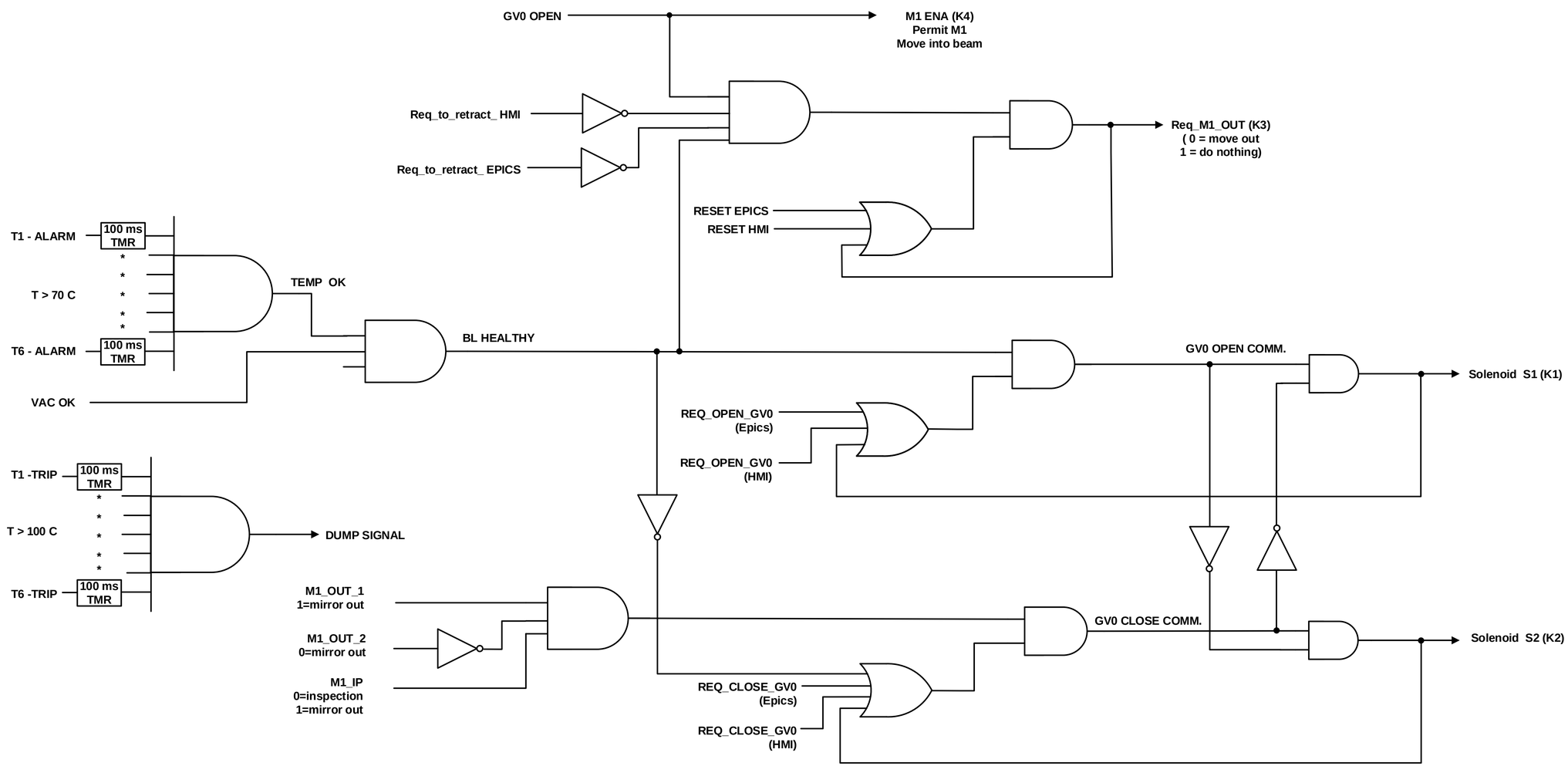

BROOKHAVEN NATIONAL LABORATORY

BROOKHAVEN NATIONAL LABORATORY
BROOKHAVEN SCIENCE ASSOCIATES
UPTON, NEW YORK 11973

Exploring Life's Mysteries, Protecting its Future

NSLS II NATIONAL SYNCHROTRON LIGHT SOURCE II

UNLESS OTHERWISE SPECIFIED
INTEGER TOLERANCES ± .06
DECIMAL TOLERANCES
.X ± .030
.XX ± .015
.XXX ± .010
ANGULAR TOLERANCE ± 0.5°
UNSPECIFIED RADII .02 MAX
125 BREAK SHARP CORNERS AND EDGES
FINISH MAX .03 MIN .005

UNLESS OTHERWISE SPECIFIED DIMENSIONS ARE IN INCHES
DIMENSIONS IN [ ] ARE MILLIMETERS EQUIV. FOR REF. ONLY

ESH&Q RISK LEVEL A-2

INTERPRET DRAWING AS PER ANSI Y14.5 OR Y32.2

		DATE	OUTSTANDING ECN'S
DRWN BY	S. JARZABKOWSKI	7/18/2018	
CHK BY	J. MALLEY	8/09/2018	
ENG APP	A. CASTIBLANCO	8/09/2018	
SUPV APP	G. GANETIS	8/09/2018	
QA APP	E. CHESWICK	7/18/2018	
ESH APP	B. LEE	7/19/2018	

JOB NUMBER | USED ON DWG. NO.

EPS LOGIC DIAGRAM,
22-IR (FIS / MET)

LT-EL-BL-EI (DRAWING DIRECTORY) | LT-EL-BL-EI-EPS-1220-96 (DRAWING NUMBER) | B (REV)

COMPUTER REPRODUCIBLE | SCALE: N/A | SHEET 1 OF 1

LT-EL-BL-EI-EPS-1220-96

EPS WIRING DIAGRAM, 22-IR (FIS / MET)

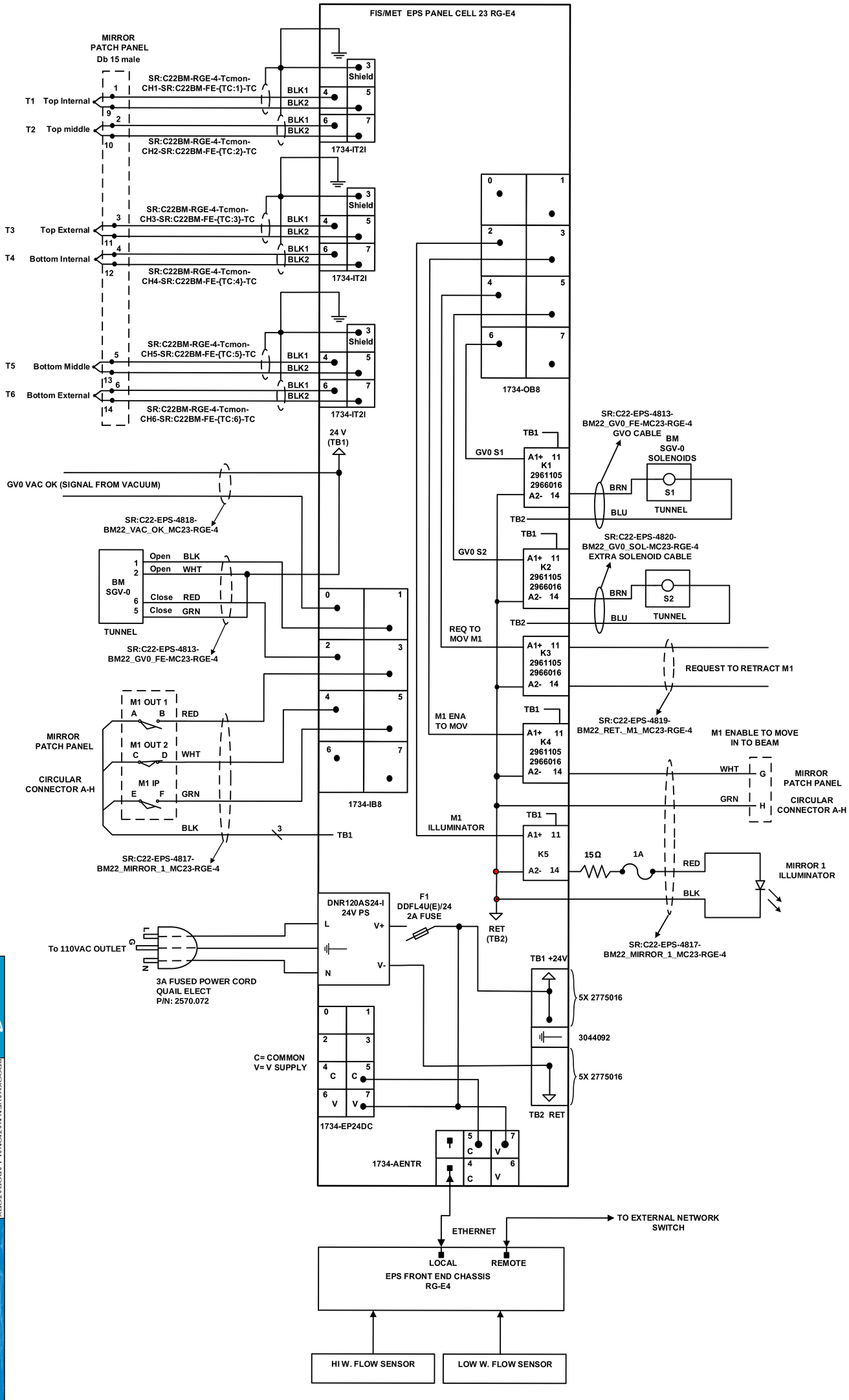

REV	DESCRIPTION	DATE	BY	CHECKED	APP
A	INITIAL RELEASE	7/18/2018	SEJ	JM	AC
B	REVISED PER ECN LT-ECN-018-20/43	9/27/2018	SEJ	JM	AC

BROOKHAVEN NATIONAL LABORATORY
BROOKHAVEN SCIENCE ASSOCIATES
BROOKHAVEN, UPTON, NEW YORK 11973
Exploring Life's Frontiers Protecting its Future

NSLS II NATIONAL SYNCHROTRON LIGHT SOURCE II

UNLESS OTHERWISE SPECIFIED DIMENSIONS IN [ ] ARE MILLIMETERS EQUIV. FOR REF. ONLY

UNLESS OTHERWISE SPECIFIED INTEGER TOLERANCES ± .05
DECIMAL TOLERANCES
.X ± .000
.XX ± .015
.XXX ± .010
ANGULAR TOLERANCE ± 0.5°
UNSPECIFIED BRDR: .02 MAX
BREAK SHARP EDGES
FINISH: MAX .03 MIN .005

			DATE
DRWN BY	S. JARZABKOWSKI		7/18/2018
CHK BY	J. MALLEY		8/09/2018
ENG APP	A. CASTILLANCO		8/09/2018
SUPV APP	G. CANETIS		8/09/2018
QA APP	E. CHESNICK		7/18/2018
ESH APP	B. LEE		7/18/2018

ESH&Q RISK LEVEL A-2
OUTSTANDING ECN'S

EPS WIRING DIAGRAM, 22-IR (FIS / MET)

LT-EL-BL-EI
DRAWING DIRECTORY

LT-EL-BL-EI-EPS-1220-95
DRAWING NUMBER

B
REV

COMPUTER REPRODUCIBLE

SCALE: N/A

SHEET 1 OF 1

JOB NUMBER

USED ON DWG. NO.

LT-EL-BL-EI-EPS-1220-95

REV	DESCRIPTION	DATE	BY	CHECKED	APP
	SEE SHEET 1				

FIS / MET WIRING DIAGRAM PART LIST

QTY	PART NUMBER	DESCRIPTION	MFG
1	5-FEB	PANEL 5U (19"X9")	MIDDEL ATLANTIC
3	1734-IT2I	THERMOCOUPLE POINT I/O	Allen – Bradley
1	1734-OB8	8 POINT I/O DIGITAL OUTPUT	Allen – Bradley
1	1734-IB8	8 POINT I/O DIGITAL INPUT	Allen – Bradley
1	1734-AENTR	POINT I/O DUAL PORT ETHERNET	Allen – Bradley
1	1734-EP24DC	24 V EXPANSION POWER SUPPLY	Allen – Bradley
1	DNR120AS24-I	AC/DC CONVERTER 24V 120W	XP POWER
1	DDFL4U(E)/24	TERMINAL BLOCK FUSE WITH LED	ALTECH
1	2570.072	3A FUSED POWER CORD	QUAIL ELECT
10	2775016	FEED-THROUGH TERMINAL BLOCK	PHOENIX CONTACT
1	3044092	TERMINAL BLOCK GROUNDING	PHOENIX CONTACT
2	FBI-10-6-0203250	BRIDGE BAR, TERMINAL BLOCK	PHOENIX CONTACT
4	2961105	RELAY	PHOENIX CONTACT
4	2966016	RELAY SOCKET	PHOENIX CONTACT

EPS LOGIC TEST REPORT

Cell under test: 22 IR - FIS/MET

STEP	CHECK
1. With the help of a laptop computer, go to the Main CSS page and go to the SR EPS \SR FIS/MET tab. It will show the main signals, front end components and the mirror's thermocouples.	☑

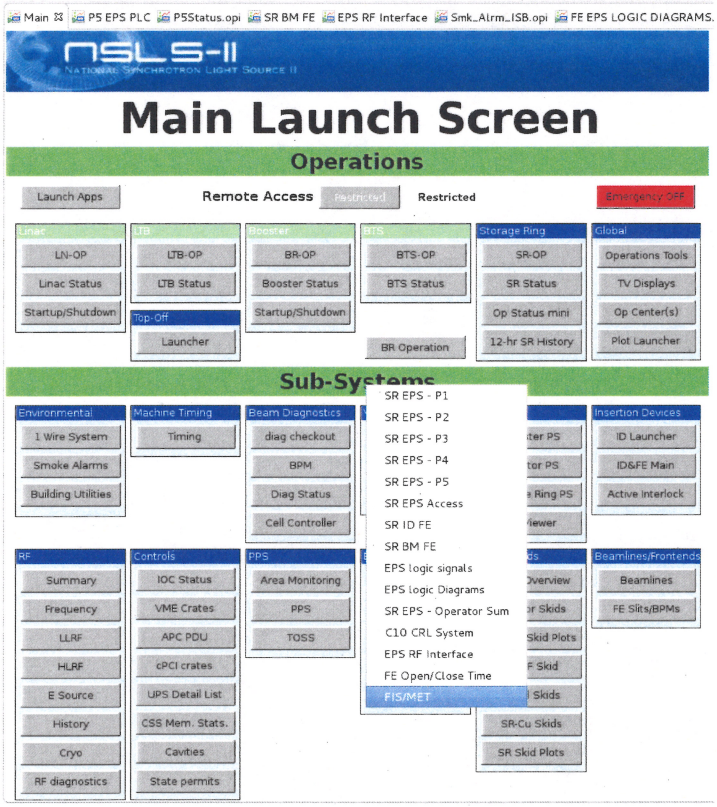

2. GV0 switches and Logic verification: ☑

Component	OPEN POSITION		CLOSE POSITION	
	EPS system	CSS page	EPS system	CSS page
GV0	✓	✓	✓	✓

3. GV0 HMI and EPICS "Open" push button control and logic verification ☑

4. GV0 HMI and EPICS "Close" push button control and logic verification ☑

5. Thermocouple verification: ☑
With the help of a heat gun verify warning and trip level of the mirror 1 thermocouples:

Thermocouple	Warning	Trip
Top Internal	✓	✓
Top Middle	✓	✓
Top External	✓	✓
Bottom Internal	✓	✓
Bottom Middle	✓	✓
Bottom External	✓	✓

6. Logic verification on the following signals:	☑

Signal	Check
Temperature OK Sum	✓
Temperature Trip Sum	✓
Vacuum OK	✓
Beamline Healthy	✓
M1 ENABLE (Permits M1 to move in to beam)	✓
Request M1 to move Out (0 = move out, 1 = do nothing)	✓
M1 out SW1 (N/O) 1 = mirror out	✓
M1 out SW2 (N/C) 0 = mirror out	✓
M1 IP SW (0 = inspection, 1 = mirror out)	✓

7. Request to retract mirror 1 HMI control verification	☑
8. Request to retract mirror 1 Epics control verification	☑
9. Mirror 1 Illuminator Epics control switch	☑

Tested by: Andres Castiblanco Date: 09-26-2018

Signature: Andres Castiblanco

EPS LOGIC TEST REPORT

Cell under test: 22 IR - FIS/MET

STEP	CHECK
1. With the help of a laptop computer, go to the Main CSS page and go to the SR EPS \SR FIS/MET tab. It will show the main signals, front end components and the mirror's thermocouples.	☑

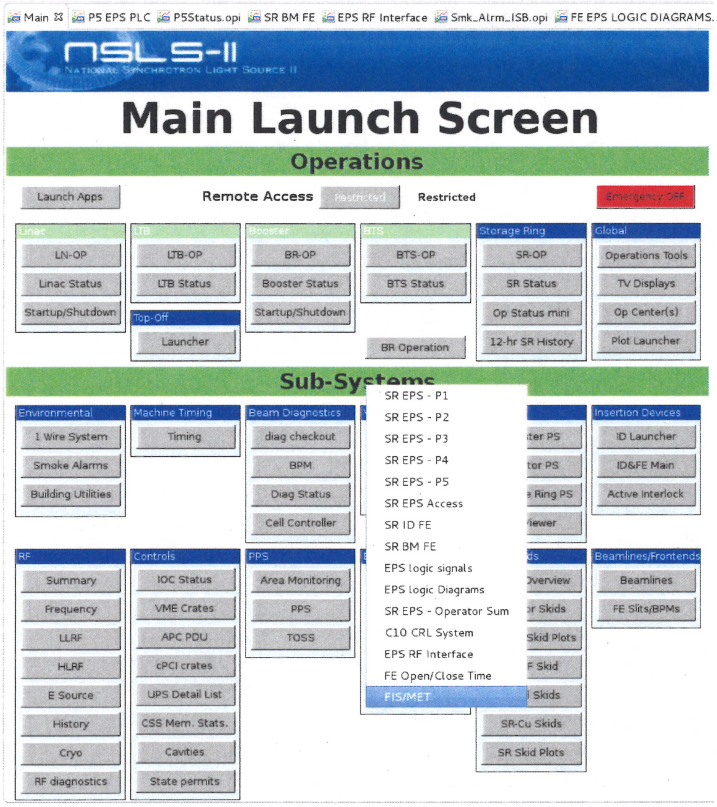

2. GV0 switches and Logic verification: ☑

Component	OPEN POSITION		CLOSE POSITION	
	EPS system	CSS page	EPS system	CSS page
GV0	✓	✓	✓	✓

3. GV0 HMI and EPICS "Open" push button control and logic verification ☑

4. GV0 HMI and EPICS "Close" push button control and logic verification ☑

5. Thermocouple verification: ☑
With the help of a heat gun verify warning and trip level of the mirror 1 thermocouples:

Thermocouple	Warning	Trip
Top Internal	✓	✓
Top Middle	✓	✓
Top External	✓	✓
Bottom Internal	✓	✓
Bottom Middle	✓	✓
Bottom External	✓	✓

6. Logic verification on the following signals:	☑

Signal	Check
Temperature OK Sum	✓
Temperature Trip Sum	✓
Vacuum OK	✓
Beamline Healthy	✓
M1 ENABLE (Permits M1 to move in to beam)	✓
Request M1 to move Out (0 = move out, 1 = do nothing)	✓
M1 out SW1 (N/O) 1 = mirror out	✓
M1 out SW2 (N/C) 0 = mirror out	✓
M1 IP SW (0 = inspection, 1 = mirror out)	✓

7. Request to retract mirror 1 HMI control verification	☑
8. Request to retract mirror 1 Epics control verification	☑
9. Mirror 1 Illuminator Epics control switch	☑

Tested by: Andres Castiblanco Date: 09-26-2018

Signature: Andres Castiblanco