FDR REPORT

NSLS-II IR-BEAMLINE

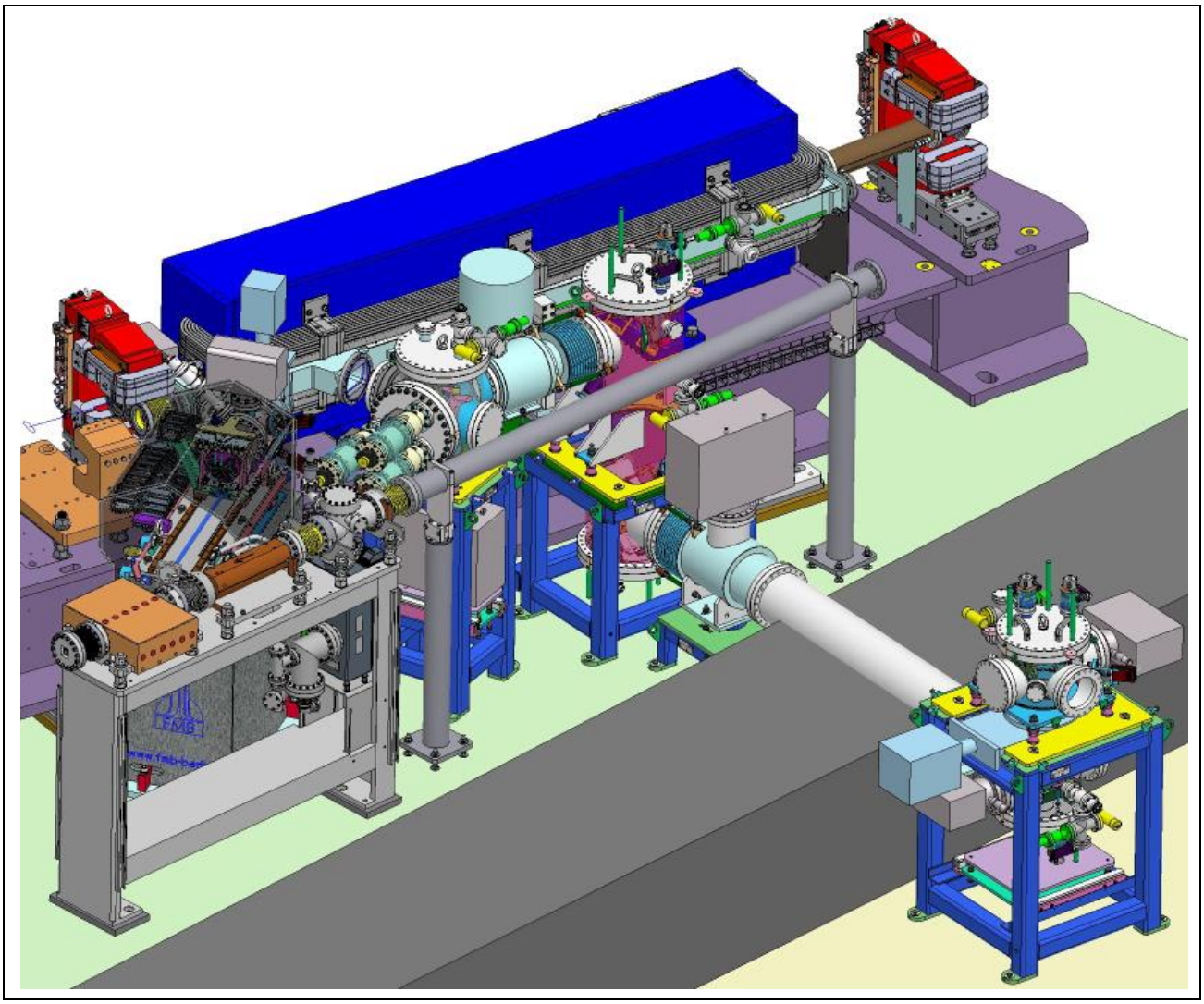

1 IDENTIFICATION OF THE PROJECT

Customer Facility:	BNL	NSLS-II	
Description:	FIS/MET UHV Optical Extraction System		
FMB S/O No:	20160083	Customer PO No:	300794
FMB Project Lead:	Karsten BLUEMER	Cust Project Lead:	G. L. CARR
	DL: +49 30 677730 62		DL: +1 631 344 4929

THIS DOCUMENT BELONGS TO FMB Feinwerk- und Meßtechnik GmbH AND IS ISSUED ON CONDITION THAT IT IS NOT COPIED, REPRINTED OR DISCLOSED EITHER WHOLLY OR IN PART TO A THIRD PARTY WITHOUT PRIOR CONSENT IN WRITING FROM FMB.

2 CONTENTS

1 IDENTIFICATION OF THE PROJECT 1

2 CONTENTS 2

3 REFERRED DOCUMENTS 4

3.1 DOCUMENTS 4

3.2 DRAWINGS 4

3.3 SAMPLE TRAVELLERS 5

4 DETAILED DESIGN INFORMATION 6

4.1 STRUCTURAL FEA 6

4.2 COOLING CIRCUITS 6

4.3 MATERIAL SELECTION 10

4.4 CRITICAL COMPONENTS' LIFE CYCLE 10

4.5 VACUUM SYSTEM LAYOUT 10

4.6 PORT LISTS 10

4.7 VACUUM HARDWARE 14

4.8 CONTROLS SYSTEM 15

4.9 PROPOSED DESIGN IMPROVEMENTS (VALUE ENGINEERING) 16

4.10 OPTICS SPECIFICATION 16

5 MANUFACTURING AND QA INFORMATION 16

5.1 MANUFACTURING INSPECTION TEST PLAN 16

5.2 TEST AND INSPECTION PLAN 16

6 ESH INFORMATION 19

6.1 HAZARD ANALYSIS 19

7 SHIPMENT 20

7.1 PACKAGING 20

7.2 LIFTING OPERATIONS 20

8 FIDUCIALISATION 21

9 INSTALLATION & COMMISSIONING 21

10 PRESSURE SAFETY 21

10.1 97/23/EC COMPLIANCE 21

10.2 WELDING STANDARD 22

11 SPARE PARTS 22

11.1 MAINTENANCE AND LUBRICATION SCHEDULE 22

THIS DOCUMENT BELONGS TO FMB Feinwerk- und Meßtechnik GmbH AND IS ISSUED ON CONDITION THAT IT IS NOT COPIED, REPRINTED OR DISCLOSED EITHER WHOLLY OR IN PART TO A THIRD PARTY WITHOUT PRIOR CONSENT IN WRITING FROM FMB.

12 CHANGES AND ADDITIONS SINCE PDR 22

12.1 FURTHER MODIFICATIONS 22

13 MINUTES OF FDR MEETING 22

THIS DOCUMENT BELONGS TO FMB Feinwerk- und Meßtechnik GmbH AND IS ISSUED ON CONDITION THAT IT IS NOT COPIED, REPRINTED OR DISCLOSED EITHER WHOLLY OR IN PART TO A THIRD PARTY WITHOUT PRIOR CONSENT IN WRITING FROM FMB.

3 Referred Documents

3.1 Documents

Filename	Document Title
20160083_BSA_RFP300794_FIS-MET_UHVOE_Vacuum_Design_Conformity_Rev00.pdf	vacuum design conformity
20160083_BSA_RFP300794_FIS-MET_UHVOE_ManufInspTestPlan.pdf	manufacturing inspection test plan
20160083_BSA_RFP300794_FIS-MET_UHVOE_Material_Handling_Safety.pdf	material handling safety
20160083_BSA_RFP300794_FIS-MET_UHVOE_M1-welded-bellow.pdf	M1-welded-bellow
20160083_BSA_RFP300794_FIS-MET_UHVOE_vacuumscheme_Rev00.pdf	vacuumscheme
20160083_BSA_RFP300794_FIS-MET_UHVOE_HazardAnalysis.pdf	hazard Analysis
20160083_BSA_RFP300794_FIS-MET_UHVOE-Installation_Plan_Rev00.pdf	installation plan
20160083_BSA_RFP300794_FIS-MET_UHVOE_Welding-plan.pdf	welding plan
20160083_BSA_RFP300794_FIS-MET_UHVOE_Spare_Parts_Rev_00.pdf	spare parts
20160083_BSARFP300794_FIS-MET_UHVOE_FDR_Minutes_Rev00.pdf	FDR minutes
20160083_FIS_MET_UHVOE_Projectplan-Rev02.mpp	projectplan

3.2 Drawings

730-00-fis-met-uhvoe_161202_1.pdf
730-00-fis-met-uhvoe_161202_2.pdf
730-00-00b-ref-fis-met-uhvoe_1.pdf
730-00-00b-ref-fis-met-uhvoe_2.pdf
730-00-00b-ref-fis-met-uhvoe_3.pdf
730-00-00b-ref-fis-met-uhvoe_4.pdf
730-23-02-m1-mirror_160808_1.pdf
730-23-02-m1-mirror_160808_2.pdf
730-43-01a-mirror-2_1.pdf
730-47-01a-mirror-3_1.pdf
730-48-01a-mirror-4_1.pdf
730-56-25a-mirror-5-6_1.pdf
730-12-00-dipole-chamber_161021.pdf
730-12-11-00-abs-unit_161024_1.pdf

THIS DOCUMENT BELONGS TO FMB Feinwerk- und Meßtechnik GmbH AND IS ISSUED ON CONDITION THAT IT IS NOT COPIED, REPRINTED OR DISCLOSED EITHER WHOLLY OR IN PART TO A THIRD PARTY WITHOUT PRIOR CONSENT IN WRITING FROM FMB.

730-14-00-taper-chamber_161024_1.pdf
730-20-00-m1-mirror-system-m1s_161128_1.pdf
730-21-00-m1-assembly_161103_1.pdf
730-00-02-01A_wiring_patch_panel.pdf
730-40-00-trans-mir_optics_161201_1.pdf
730-40-01-00-pumping-chamber_161201_1.pdf
730-40-02-00-wall-tube_161201_1.pdf
730-41-01-00-m2-unit_161110_1.pdf
730-41-02-00-m3-m4-unit_161201_1.pdf
730-43-00-mirror-2-holder_160901_1.pdf
730-44-00a-precise-guide-pusher_1.pdf
730-46-00-chamber-m3-m4_161201_1.pdf
730-47-00-mirror-3-holder_161104_1.pdf
730-47-00-mirror-3-holder_161104_2.pdf
730-48-00-mirror-4-holder_161104_1.pdf
730-48-00-mirror-4-holder_161104_2.pdf
730-49-00-precise-linear-pusher_160902_1.pdf
565-01-99C_wiring_stepper_limits_NSLS2
730-50-00-m2-support_161201_1.pdf
730-54-00-m5-m6-system_161201_1.pdf
730-54-01-00-m5-unit_161201_1.pdf
730-54-02-00-m6-unit_161201_1.pdf
730-56-00-mirror-5-holder_161104_1.pdf
730-56-00-mirror-5-holder_161104_2.pdf

3.3 SAMPLE TRAVELLERS

01_M1_Mirror_System.pdf
02_M1_System_Assembly
03_M1_Support_and_Sliding_System.pdf
04_M1_Support.pdf
05_M1_Baseplate.pdf
06_Dipole_Chamber.pdf
07_M2_Chamber.pdf
08_Mirror_2_Holder.pdf
09_M3_M4_Chamber.pdf
10_M3_Holder.pdf
11_M4_Holder.pdf
12_M5_Chamber.pdf
13_M5_Holder.pdf

THIS DOCUMENT BELONGS TO FMB Feinwerk- und Meßtechnik GmbH AND IS ISSUED ON CONDITION THAT IT IS NOT COPIED, REPRINTED OR DISCLOSED EITHER WHOLLY OR IN PART TO A THIRD PARTY WITHOUT PRIOR CONSENT IN WRITING FROM FMB.

4 DETAILED DESIGN INFORMATION

3D Models and 2D Drawings were put on the FMB FTP server.

4.1 STRUCTURAL FEA

This is described in attached document:

- 20160083_BSA_RFP300794_FIS-MET_UHVOE_Vacuum_Design_Conformity_rev00.pdf

4.2 COOLING CIRCUITS

4.2.1 DIPOLE CHAMBER

Figures 1 show the location of the water colling channel on the Dipole chamber. It would be insert in the water cooling circuit of the other Dipole chambers There are no water-to-vacuum welds, brazes, or joints.

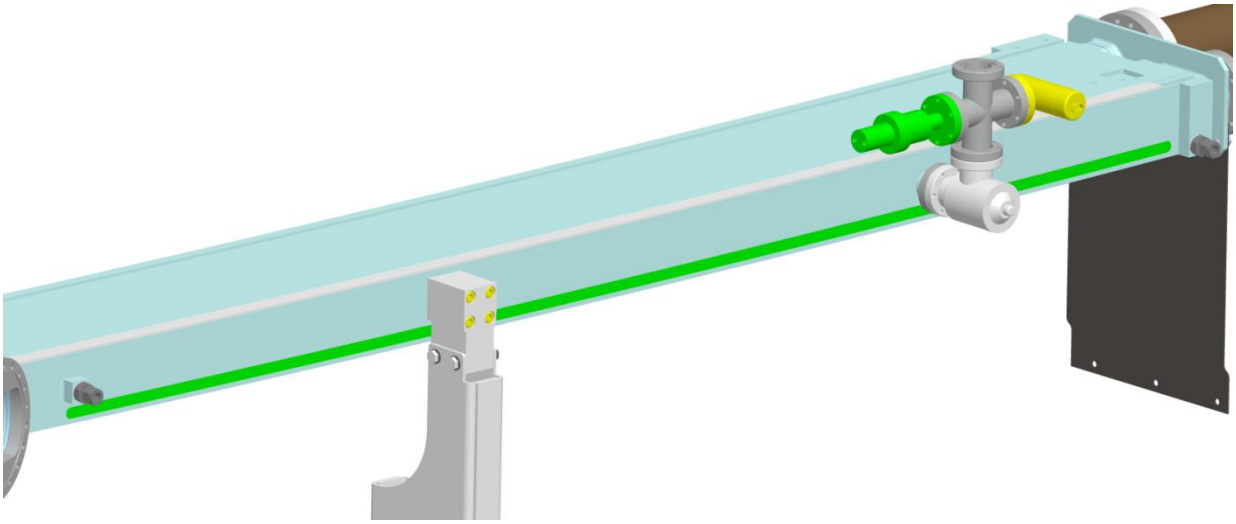

Figure 1: Dipole Chamber cooling channel (green)

THIS DOCUMENT BELONGS TO FMB Feinwerk- und Meßtechnik GmbH AND IS ISSUED ON CONDITION THAT IT IS NOT COPIED, REPRINTED OR DISCLOSED EITHER WHOLLY OR IN PART TO A THIRD PARTY WITHOUT PRIOR CONSENT IN WRITING FROM FMB.

4.2.2 TAPER

Figure 2 illustrates the cooling of the Taper. It would be insert in the water cooling circuit of the storage ring. The inside of the cooling channel is coloured green. There are no water-to-vacuum welds, brazes, or joints.

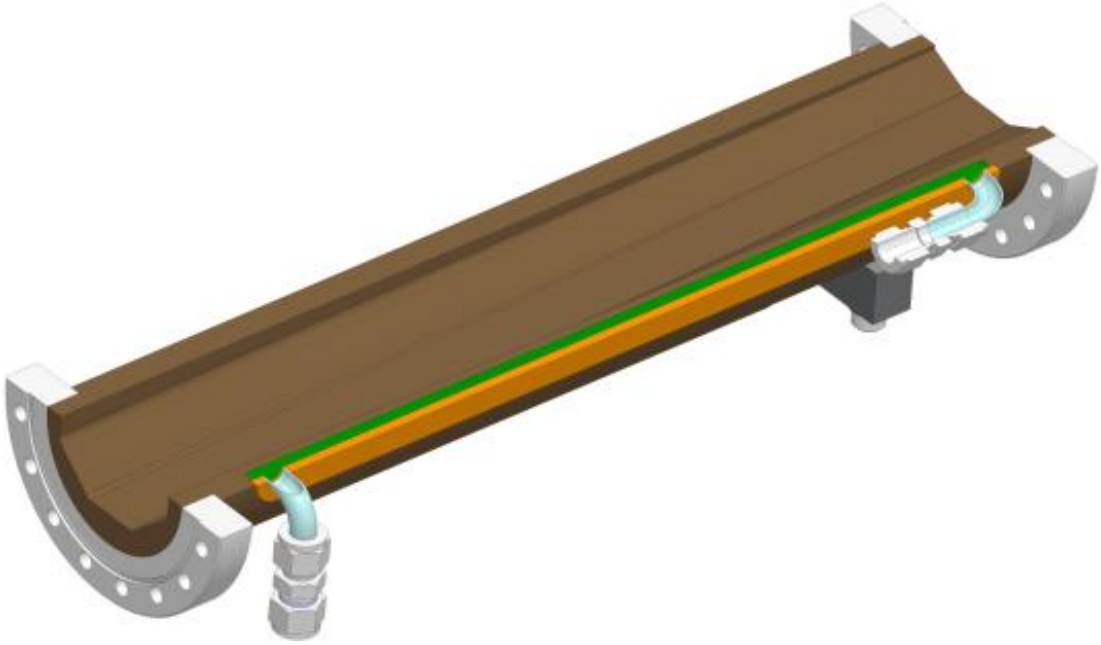

Figure 2: Taper cooling channel

4.2.3 ABSORBER

Figure 3 and Figure 4 illustrates the cooling of the Taper. It would be insert in the water cooling circuit of the storage ring. The cooling tube is coloured yellow. There are no water-to-vacuum welds, brazes, or joints.

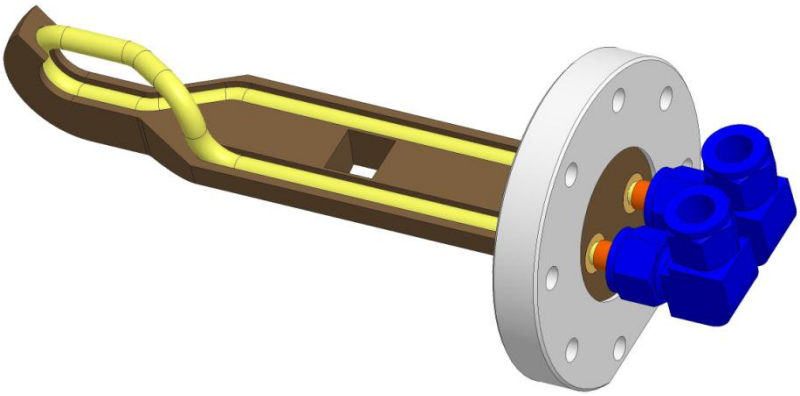

Figure 3: Absorber cooling

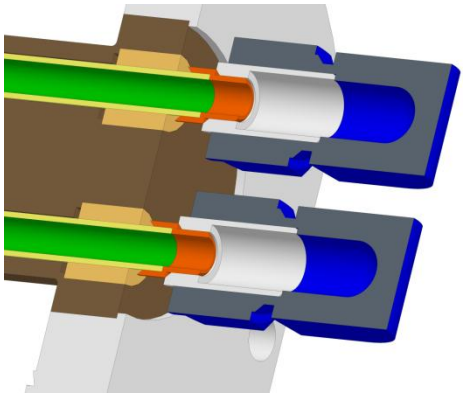

Figure 4: Detail cut of Absorber flange

THIS DOCUMENT BELONGS TO FMB Feinwerk- und Meßtechnik GmbH AND IS ISSUED ON CONDITION THAT IT IS NOT COPIED, REPRINTED OR DISCLOSED EITHER WHOLLY OR IN PART TO A THIRD PARTY WITHOUT PRIOR CONSENT IN WRITING FROM FMB.

4.2.4 M1 MIRROR

Figure 5 show thru the cooling system. The water inlet is thru the swagelok and then flow the water outside the yellow bypass tube to the end of the hole in the brown cooling body. Then flows into the yellow bypasstube to the end of the second hole, then back outside of the yellow bypass tube and to the water outlet of the Second swagelok. Please se also Figure 6 and Figure 7.

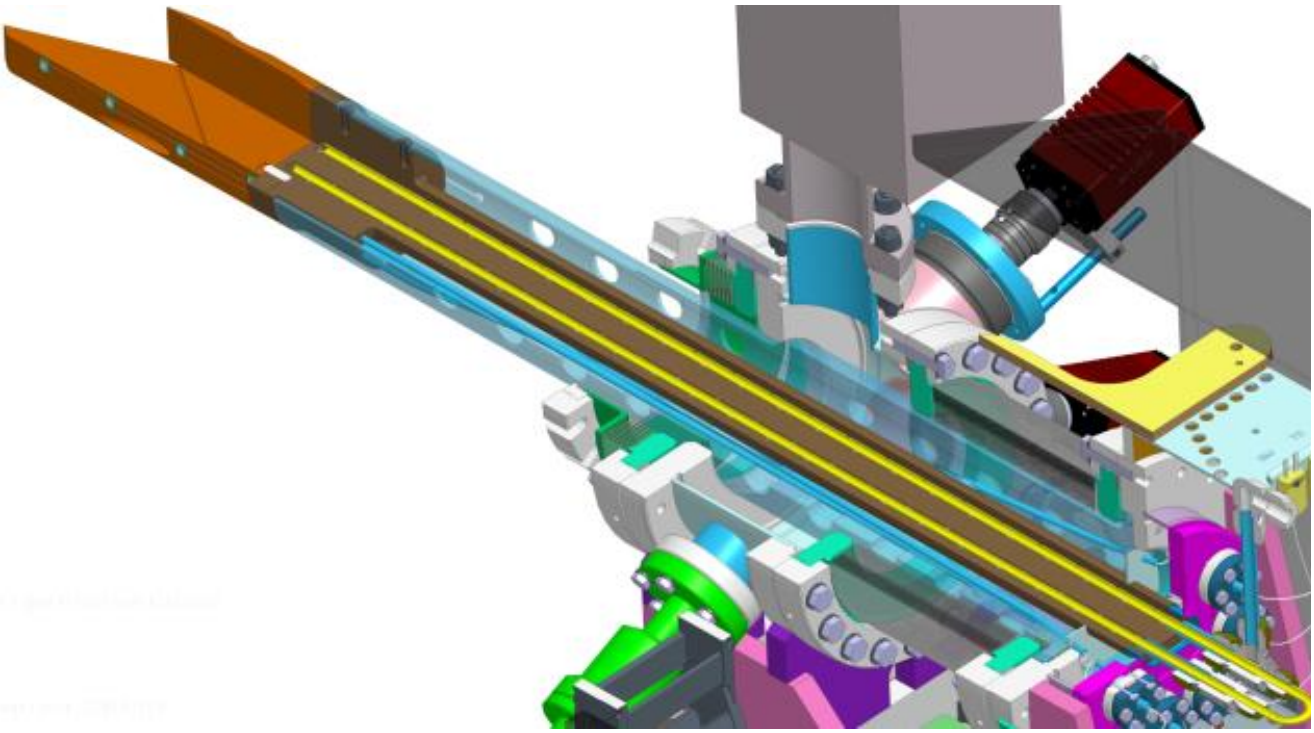

Figure 5: cut of the M1 mirror cooling system

Figure 6 show the swagelok interface, one for inlet, one for outlet. Please note: the blue tubes and the yellow tube are not connected to each other. The mirror cooling is over contact surfaces between the M1 and the cooling body.

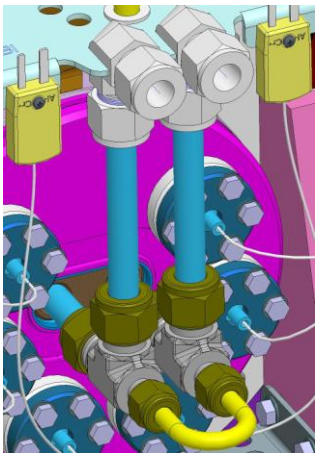

Figure 6: detail of the swagelok interface

THIS DOCUMENT BELONGS TO FMB Feinwerk- und Meßtechnik GmbH AND IS ISSUED ON CONDITION THAT IT IS NOT COPIED, REPRINTED OR DISCLOSED EITHER WHOLLY OR IN PART TO A THIRD PARTY WITHOUT PRIOR CONSENT IN WRITING FROM FMB.

Figure 7 show a more closer view. The helical wire is to avoid laminar flow of the cooling water between the wall of the hole and the wall of the bypass tube. The cooling circuit for this system will be stand alone to avoid vibration of the mirror. There are no water-to-vacuum welds, brazes, or joints.

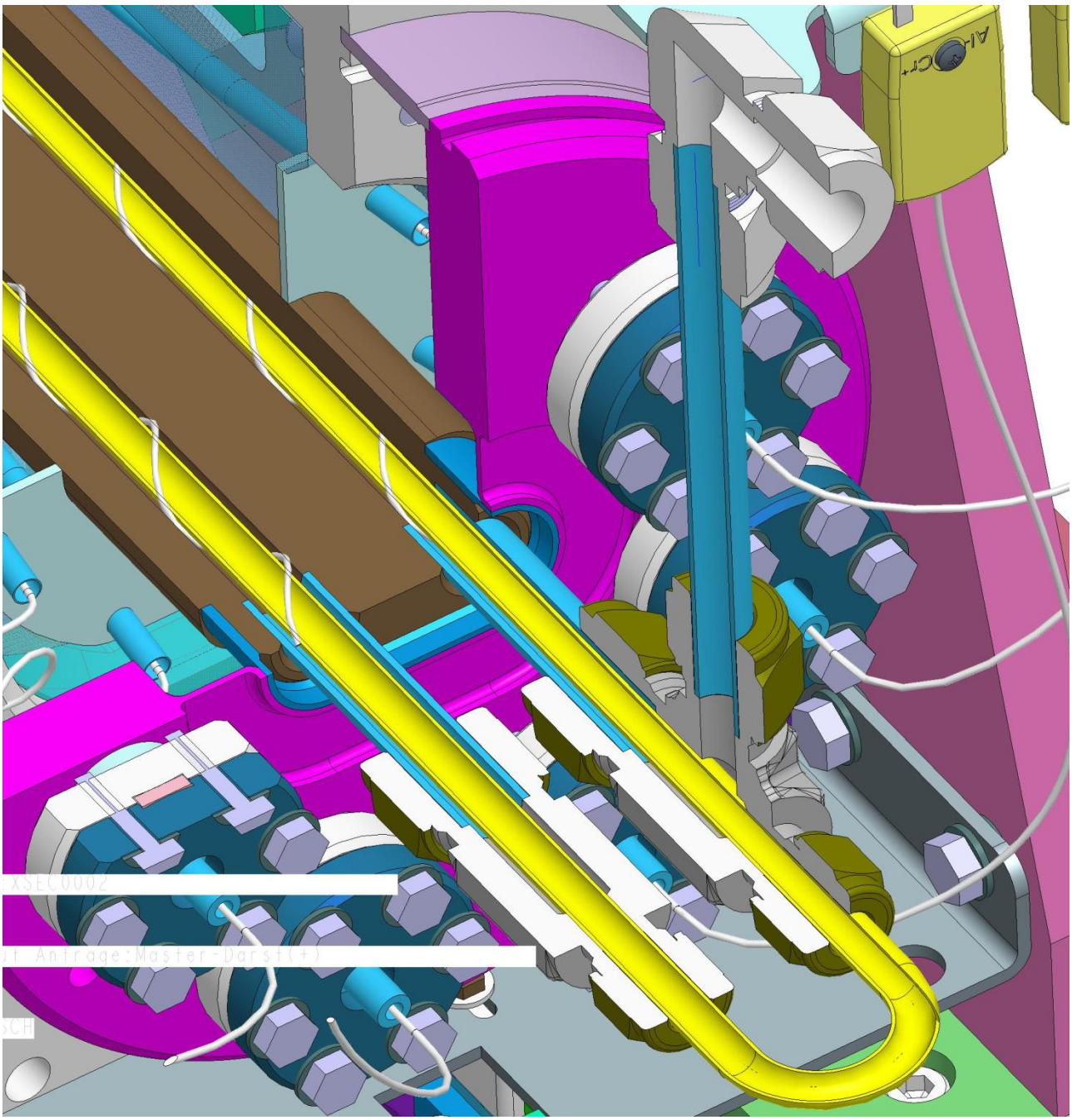

Figure 7: cut vertical thru one Swagelok and horizontally thru the yellow bypass tube

THIS DOCUMENT BELONGS TO FMB Feinwerk- und Meßtechnik GmbH AND IS ISSUED ON CONDITION THAT IT IS NOT COPIED, REPRINTED OR DISCLOSED EITHER WHOLLY OR IN PART TO A THIRD PARTY WITHOUT PRIOR CONSENT IN WRITING FROM FMB.

4.3 Material Selection

This is described in attached document:

- 20160083_BSA_RFP300794_FIS-MET_UHVOE_Material_Handling_Safety.pdf

4.4 Critical Components' Life Cycle

Welded bellows for the movement of M1 is made for 10000 load cycles. Plesse see attached file:

- 20160083_BSA_RFP300794_FIS-MET_UHVOE_M1-welded-bellow.pdf

4.5 Vacuum System Layout

The vacuum layout of the whole FIS-MET-Beamline is given in this attached scheme:

- 20160083_BSA_RFP300794_FIS-MET_UHVOE_vacuumscheme_00.pdf

4.6 Port Lists

4.6.1 Dipole Chamber Unit

4.6.1.1 Main Vessel

No	***Port***	***Data***	***Remark***
1	Beam in	DN100-CF-F	ATLAS Flange
2	Beam out	DN100-CF-F	ATLAS Flange
3	NEG stripes in	DN075-CF-F	ATLAS Flange
4	NEG stripes out	CF100-CF-F	ATLAS Flange
5	absorber port	DN063-CF-F	ATLAS Flange
6	pump port	DN075-CF-F	ATLAS Flange
7	M1 entrace port	DN100-CF-F	ATLAS Flange
8	IR-Beam out port	DN150-CF-F	ATLAS Flange
9	Angle valve	DN040-CF-F	ATLAS Flange ; Also for pressur gauge via DN040-CF-cross.

4.6.1.2 Pump Elbow

No	***Port***	***Data***	***Remark***
10	Dipole chamber connecting port	DN075-CF-R	
11	pump port	DN100-CF-F	

THIS DOCUMENT BELONGS TO FMB Feinwerk- und Meßtechnik GmbH AND IS ISSUED ON CONDITION THAT IT IS NOT COPIED, REPRINTED OR DISCLOSED EITHER WHOLLY OR IN PART TO A THIRD PARTY WITHOUT PRIOR CONSENT IN WRITING FROM FMB.

4.6.1.3 Uppstream Taper

No	Port	Data	Remark
12	Dipole chamber connecting port	DN100-CF-F	
13	bellow port	DN100-CF-F	

4.6.2 M1 Unit

4.6.2.1 M1 Entrace Bellow

No	Port	Data	Remark
14	Dipole chamber connecting port	DN100-CF-R	special flange (grooves)
15	M1 chamber connecting port	DN150-CF-R	

4.6.2.2 M1 Chamber

No	Port	Data	Remark
16	M1 entrance bellow connecting port	DN150-CF-FT	Special flange for Mirror 1 position with conic inner geometrie.
17	M1 movable bellow connecting port	DN150-CF-FT	
18	Pump port	DN063-CF-F	
19	2x gauges port	DN040-CF-F	Also for pressur gauge via DN040-CF-T-piece and for edge valve.
20	2x view port	DN040-CF-F	Tube inner-Ø=66mm; outer-Ø=70mm

4.6.2.3 M1 Movable Bellow

No	Port	Data	Remark
21	M1 chamber connecting port	DN150-CF-R	
22	M1 mounting system connecting port	DN150-CF-R	

THIS DOCUMENT BELONGS TO FMB Feinwerk- und Meßtechnik GmbH AND IS ISSUED ON CONDITION THAT IT IS NOT COPIED, REPRINTED OR DISCLOSED EITHER WHOLLY OR IN PART TO A THIRD PARTY WITHOUT PRIOR CONSENT IN WRITING FROM FMB.

4.6.2.4 M1 Mounting System

No	Port	Data	Remark
23	M1 movable bellow connecting port	DN150-CF-F	
24	6x Thermo sensor port	DN016-CF-FT	

4.6.3 Trans-Mirror-Optics

4.6.3.1 M2 Unit

No	Port	Data	Remark
25	IR-Beam in port	DN160-CF-F	
26	IR-Beam out port	DN160-CF-F	
27	top port	DN300-CF-F	
28	M2-Holder port	DN300-CF-F	
29	pump port	DN160-CF-F	
30	maintenance port	DN160-CF-F	
31	view port	DN040-CF-F	Tube inner-Ø=66mm; outer-Ø=70mm
32	gauge port	DN040-CF-F	Via hand driven edge valve and DN040-CF cross piece. On top flange.
33	spare port	DN040-CF-F	On top flange.

4.6.3.2 M2 Holder

No	Port	Data	Remark
34	base port	DN300-CF-F	
35	2x actuator port	DN040-CF-ZL	
36	actuator port	DN040-CF-F	

4.6.3.3 H-Bellow 150-200

No	Port	Data	Remark
37	IR-Beam in port	DN160-CF-F	
38	IR-Beam out port	DN200-CF-F	

THIS DOCUMENT BELONGS TO FMB Feinwerk- und Meßtechnik GmbH AND IS ISSUED ON CONDITION THAT IT IS NOT COPIED, REPRINTED OR DISCLOSED EITHER WHOLLY OR IN PART TO A THIRD PARTY WITHOUT PRIOR CONSENT IN WRITING FROM FMB.

4.6.3.4 M3-M4 Unit

No	Port	Data	Remark
39	IR-Beam in port	DN200-CF-F	
40	IR-Beam out port	DN250-CF-F	
41	M3-Holder port	DN350-CF-F	on top
42	M4-Holder port	DN350-CF-F	on bottom
43	view port M3	DN040-CF-F	Tube inner-Ø=66mm; outer-Ø=70mm
44	view port M4	DN040-CF-F	Tube inner-Ø=66mm; outer-Ø=70mm
45	gauges port	DN040-CF-F	Via hand driven edge valve and DN040-CF cross piece.
46	spare port	DN040-CF-F	

4.6.3.5 M3 Holder

No	Port	Data	Remark
47	base Port	DN350-CF-F	
48	2x actuator port	DN040-CF-R	

4.6.3.6 M4 Holder

No	Port	Data	Remark
49	base Port	DN350-CF-F	
50	2x actuator port	DN040-CF-R	

4.6.3.7 Pump Chamber

No	Port	Data	Remark
51	IR-Beam in port	DN250-CF-F	
52	IR-Beam out port	DN200-CF-F	
53	pump port	DN160-CF-F	

4.6.3.8 Wall Tube

No	Port	Data	Remark
54	IR-Beam in port	DN200-CF-F	
55	IR-Beam out port	DN150-CF-F	

THIS DOCUMENT BELONGS TO FMB Feinwerk- und Meßtechnik GmbH AND IS ISSUED ON CONDITION THAT IT IS NOT COPIED, REPRINTED OR DISCLOSED EITHER WHOLLY OR IN PART TO A THIRD PARTY WITHOUT PRIOR CONSENT IN WRITING FROM FMB.

4.6.3.9 H-Bellow 150-150

No	*Port*	*Data*	*Remark*
56	IR-Beam in port	DN200-CF-F	
57	IR-Beam out port	DN150-CF-F	

4.6.4 M5-M6 System

4.6.4.1 M5 Chamber

The M5 Chamber is also used for the M6-Unit. So all dates in the table has to dublicated.

No	*Port*	*Data*	*Remark*
58	M5-6 Holder port	DN300-CF-B	For M5 on bottom; for M6 on top.
59	IR-Beam in port	DN160-CF-F	For M6 Unit: IR-Beam out port.
60	IR-Beam out port	DN160-CF-F	For M6 Unit: IR-Beam in port.
61	pump port	DN160-CF-F	
62	spare port	DN160-CF-F	For M6 Unit: additional, rotated by 90°, IR-Beam out port.
63	2x view port	DN040-CF-F	Tube inner-Ø=66mm; outer-Ø=70mm
64	gauge port	DN040-CF-F	Via hand driven edge valve and DN040-CF cross piece.
65	spare port	DN040-CF-F	

4.6.4.2 M5 Holder

The M5 Holder is used twice, since the Mirrors for M5 and M6 has the same size, named as M5-6. So the dates in the table has to dublicated.

No	*Port*	*Data*	*Remark*
66	base port	DN300-CF-F	
67	2x actuator port	DN040-CF-R	

4.7 Vacuum Hardware

4.7.1 Dipole Chamber Unit

- Ion Pump: GammaVacuum 150TV-CV-6P-SC-110-N, supplied by GammaVacuum
- VAT 54132-GE02, supplied by VAT
- Four way cross DN040-CF, supplied by TRINOS
- Pirani Gauge radiation resistent: MKS317, p/n MKS103170044-SH, supplied by MKS
- Cold Cathode Gauge radiation resistent: MKS455, p/n MKS104220036, supplied by MKS

THIS DOCUMENT BELONGS TO FMB Feinwerk- und Meßtechnik GmbH AND IS ISSUED ON CONDITION THAT IT IS NOT COPIED, REPRINTED OR DISCLOSED EITHER WHOLLY OR IN PART TO A THIRD PARTY WITHOUT PRIOR CONSENT IN WRITING FROM FMB.

4.7.2 M1 Unit

- Ion Pump: GammaVacuum 75S-CV-4V-SC-N-N, supplied by GammaVacuum
- VAT 54132-GE02, supplied by VAT
- T-Piece DN040-CF, supplied by TRINOS
- Pirani Gauge radiation resistent: MKS317, p/n MKS103170044-SH, supplied by MKS
- Cold Cathode Gauge radiation resistent: MKS455, p/n MKS104220036, supplied by MKS

4.7.3 M2 Unit

- Ion Pump: TiTan 300T-CV-8S-SC-N-N, supplied by GammaVacuum
- VAT 54132-GE02, supplied by VAT
- Four way cross DN040-CF, supplied by TRINOS
- Pirani Gauge radiation resistent: MKS317, p/n MKS103170044-SH, supplied by MKS
- Cold Cathode Gauge radiation resistent: MKS455, p/n MKS104220036, supplied by MKS

4.7.4 M3-M4 Unit

- VAT 54132-GE02, supplied by VAT
- Four way cross DN040-CF, supplied by TRINOS
- Pirani Gauge radiation resistent: MKS317, p/n MKS103170044-SH, supplied by MKS
- Cold Cathode Gauge radiation resistent: MKS455, p/n MKS104220036, supplied by MKS

4.7.5 Pump Chamber

- Ion Pump: GammaVacuum 300T-CV-8S-SC-N-N, supplied by GammaVacuum

4.7.6 M5-M6 Unit

- 2x Ion Pump: GammaVacuum 150TV-CV-6S-SC-N-N, supplied by GammaVacuum
- 2xVAT 54132-GE02, supplied by VAT
- 2xFour way cross DN040-CF, supplied by TRINOS
- 2xPirani Gauge radiation resistent: MKS317, p/n MKS103170044-SH, supplied by MKS
- 2xCold Cathode Gauge radiation resistent: MKS455, p/n MKS104220036, supplied by MKS
- Vave VAT 48244-CE44-AAB2, supplied ba VAT

4.8 Controls System

In the PDR it was agreed to send a GeoBrickLV-NSLS-2 to FMB for testing and FAT. See also the PDR (01_Minutes_PDR-Meeting_2016-09-15_2.pdf).

Wiring diagrams of the M1 patch panel are given in drawing 730-00-02-01A_wiring_patch_panel.pdf.

Wiring diagrams of the M3 to M6 precise linear pusher are given in drawing 565-01-99C_wiring_stepper_limits_NSLS2.pdf.

THIS DOCUMENT BELONGS TO FMB Feinwerk- und Meßtechnik GmbH AND IS ISSUED ON CONDITION THAT IT IS NOT COPIED, REPRINTED OR DISCLOSED EITHER WHOLLY OR IN PART TO A THIRD PARTY WITHOUT PRIOR CONSENT IN WRITING FROM FMB.

4.9 Proposed Design Improvements (Value Engineering)

The following items have been identified as having the potential to improve the design.

- None (Jan 2017)

4.10 Optics specification

The optical specification of the mirror surface of the mirror M1 is fully described on drawings:

- 730-23-02-m1mirror_160808_1.pdf
- 730-23-02-m1mirror_160808_2.pdf.

The optical specification of the mirror surface of the mirrors M2, M3, M4 and M5-6 is fully described on drawings:

- 730-43-01a-mirror-2_1.pdf
- 730-47-01a-mirror-3_1.pdf
- 730-48-01a-mirror-4_1.pdf
- 730-56-25a-mirror-5-6_1.pdf

5 Manufacturing and QA Information

5.1 Manufacturing Inspection Test Plan

This is described in attached document:

- 20160083_BSA_RFP300794_FIS-MET_UHVOE_ManufInspTestPlan.pdf

5.1.1 Sample Travellers

For sample travellers of the main assembly and main subassemblies see the documents referred to in section 3.3 Sample Travellers. These are travellers of a monochromator very similar to the ones of this contract which in addition will have two UV lamps for carbon removal. Other differences are mainly dimensional.

A full set of travellers (of approx. 250 pages) can be provided on request.

The travellers will be created once the design is finished and forwarded to the Work Preparation Dept.

5.2 Test and Inspection Plan

5.2.1 Acceptance test program and parameters

5.2.1.1 General

Tests will be performed at FMB-Berlin.

Tests will be done when possible at working conditions, with water circulating and under vacuum.

5.2.1.2 Environment

- Clean room Class 10.000, Temperature: 23 ±1 ºC
- Tests will also be performed in a workshop environment

THIS DOCUMENT BELONGS TO FMB Feinwerk- und Meßtechnik GmbH AND IS ISSUED ON CONDITION THAT IT IS NOT COPIED, REPRINTED OR DISCLOSED EITHER WHOLLY OR IN PART TO A THIRD PARTY WITHOUT PRIOR CONSENT IN WRITING FROM FMB.

- significant ground excitation between 10 and 60 Hz.

5.2.1.3 EQUIPMENT

Vacuum Tests		
Leak detector *Pfeiffer HLT 275*	Sensitivity	$8 \cdot 10^{-12}$ mbar·l·s^{-1}
RGA *mks Microvision Plus*	Mass range	1-200 a.m.u
	Sensitivity	$5 \cdot 10^{-14}$ mbar

Electrical Tests		
True RMS Multimeter *Fluke 175*	Close Circuit	R < 1 mΩ
	Open Circuit	R > 50 MΩ
	Voltage Range	600mV..1000Vmax
	Resolution	0.1V..1V

Optical Measurements		
Theodolite Wild T2000	Focus range	(0.8) 1.7m - ∞
	Resolution	0.00001°
	Acurracy (Std. deviation)	0.5 arcsec
Automatic optical level *sim. Leica NA2*	Focus range	2.7m - ∞
	Range	3..27 l/min
	Acurracy	with planparallel micrometer +/-0.3mm / km
Planparallel micrometer for optical level *sim. Leica GPM3*	Range	0..10 mm
	Resolution	0.1 mm

Motion Tests		
Interferometer *Renishaw XL-80*	Linear range	0-40 m
	Linear resolution	0.001 µm
	Linear accuracy	±0.5 µm/m (0.5 ppm)
	Angular range	±10° (0-15m)
	Angular resolution	0.1µm/m
	Angular accuracy	±(0.6%·A + 0.5 + 0.1·D) A…Angle measurement D…meas. distance

THIS DOCUMENT BELONGS TO FMB Feinwerk- und Meßtechnik GmbH AND IS ISSUED ON CONDITION THAT IT IS NOT COPIED, REPRINTED OR DISCLOSED EITHER WHOLLY OR IN PART TO A THIRD PARTY WITHOUT PRIOR CONSENT IN WRITING FROM FMB.

Autocollimator *MicroRadian TL40-Head with E2-Controller*	Range	3600 arcsec at 0.5m
	Resolution	0.1 arcsec
	Accuracy	1% linearity over entire range
	Cross coupling	0.5% over entire range

Dynamic Tests		
Interferometer *Renishaw XL-80*	Linear resolution	1 nm
	Angular resolution	0.05 µrad
	Bandwidth	0-2500Hz

Hydrostatic Tests		
Test Pump *Rothenberger RP50-60*	Maximum pressure	50 bar*
	Scale division	1 bar
Flow rates above 5 l/min Flowmeter *Kobold RCD-C*	Range	3..27 l/min
	Sensitivity	
Pressure drop Differential pressure gauge *Suku Series 5630*	Range	0 ... 16 bar
Integrated Flowmeter *Kobold DTK-1260N20400*	Range	1 ... 12 l/min

* hoses will be tested at 10 bar

5.2.2 CHECKS/TESTS

Part of the tests will be performed before the FAT meeting and the test records provided while other tests will actually be performed during the FAT meeting. The test results will be checked against the specified values given in the functional specification.

5.2.2.1 VISUAL INSPECTION

- Completeness of components

5.2.2.2 VACUUM TESTS

- Base pressure and RGA

5.2.2.3 MOTION TESTS

- **Range:** Difference between the measured positions at both ends of the stroke of a drive; the stroke is limited by limit switches
- **Repeatability:** Maximum difference between the measured positions at each nominal position during two or more stops at this nominal position going in the same direction

THIS DOCUMENT BELONGS TO FMB Feinwerk- und Meßtechnik GmbH AND IS ISSUED ON CONDITION THAT IT IS NOT COPIED, REPRINTED OR DISCLOSED EITHER WHOLLY OR IN PART TO A THIRD PARTY WITHOUT PRIOR CONSENT IN WRITING FROM FMB.

- **Accuracy:** Maximum difference between the measured position and the nominal position at each nominal position
- **Backlash:** Maximum difference between the measured positions at each nominal position during two or more stops at this nominal position going in opposite directions

Stroke, repeatability, backlash and accuracy tests are performed by repeating 4 times the cycle of scanning the whole range in positive direction and then in negative direction, while measuring the position (linear or angular) with a high accuracy sensor at 10 or more evenly spaced points of the range.

Resolution test is performed by moving the corresponding axis step by step (at fullstep) while measuring the actual position with a high resolution (and low noise) sensor. Resolution will be measured at 10 or more evenly spaced points of the range, and will be averaged over these points.

5.2.2.4 Mechanism

5.2.2.5 M1 Unit

Cooling Water Circuit Tests

- leak test of guard vacuum

Hydrostatic Tests

- all cooling hoses

Motion Tests of M1 railway IN / OUT movement

- Range
- Resolution
- Repeatability
- Limit switch function (also for mirror inspection)

5.2.2.6 M2 to M6 Holder

Motion Tests

- Range
- Resolution
- Repeatability
- Limit switch function

5.2.3 Project Schedule

This is described in attached document in MS-Project format and reflects the situation as of end of November 2016.:

- 20160083_FIS_MET_UHVOE-IR-BL-Projektplan-V002.mpp

6 ESH Information

6.1 Hazard analysis

This is described in attached document:

THIS DOCUMENT BELONGS TO FMB Feinwerk- und Meßtechnik GmbH AND IS ISSUED ON CONDITION THAT IT IS NOT COPIED, REPRINTED OR DISCLOSED EITHER WHOLLY OR IN PART TO A THIRD PARTY WITHOUT PRIOR CONSENT IN WRITING FROM FMB.

- 20160083_BSA_RFP300794_FIS-MET_UHVOE_HazardAnalysis.pdf

7 SHIPMENT

7.1 PACKAGING

The units will be packed in boxes and/or cardboard boxes on pallets. Cardboard boxes will be wrapped in foil.

On boxs, the centre of gravity will be marked as well as the weight indicated. Also, shock watch and tilt watch sensors will be applied to be able to recognise excessive shocks or tilts on arrival at the customer's facility.

7.2 LIFTING OPERATIONS

Before unloading check that the shock watch and tilt watch sensors do not indicate that the box was exposed to shocks or tilts above their respective limits.

When using any kind of lifting gear stick to the respective regulations in force. Do not step or lie under lifted loads. Wear work gloves and a hard cap when handling lifted loads.

Always check before lifting that the lifting tools' lift capacities are above the actual weight to be lifted.

#	*Action*	*Tool(s)*	*Purpose*
1	Move boxes	fork lift	unload boxes from truck, or container
2	Move boxes	pallet jack	move boxes from truck, or container, or storage area to installation site
3	Lift components	crane, webbing sling	lift components out of boxes, or into place
4	Position components	manually	position components before setting them down

THIS DOCUMENT BELONGS TO FMB Feinwerk- und Meßtechnik GmbH AND IS ISSUED ON CONDITION THAT IT IS NOT COPIED, REPRINTED OR DISCLOSED EITHER WHOLLY OR IN PART TO A THIRD PARTY WITHOUT PRIOR CONSENT IN WRITING FROM FMB.

8 FIDUCIALISATION

Holes (Ø6.35H7) are provided on several locations to facilitate alignment. These locations are shown with dimensions in the proposed detail drawings.

9 INSTALLATION & COMMISSIONING

This is described in attached document:

- 20160083_BSA_RFP300794_FIS-MET_UHVOE-Installation_Plan_Rev00.pdf

10 PRESSURE SAFETY

For FEA calculations see section 4.1 Structural FEA.

10.1 97/23/EC COMPLIANCE

The only relevant parts in the design are the cooling water pipes. These have a maximum diameter of 10 mm. In article 3, section 1.3, of the Directive 97/23/EC of the European Parlament and the Council, the piping concerned is defined as

1.3. Piping intended for:

(a) gases, liquified gases, gases dissolved under pressure, vapours and those liquids whose vapour pressure at the maximum allowable temperature is greater than 0,5 bar

above normal atmospheric pressure (1 013 mbar) within the following limits:

— for fluids in Group 1 with a DN greater than 25 (Annex II, table 6),

— for fluids in Group 2 with a DN greater than 32 and a product of PS and DN greater than 1 000 bar (Annex II, table 7);

(b) liquids having a vapour pressure at the maximum allowable temperature of not more than 0,5 bar above normal atmospheric pressure (1 013 mbar), within the following limits:

— for fluids in Group 1 with a DN greater than 25 and a product of PS and DN greater than 2 000 bar (Annex II, table 8),

— for fluids in Group 2 with a PS greater than 10 bar, a DN greater than 200 and a product of PS and DN greater than 5 000 bar (Annex II, table 9).

The fluid groups are defined in article 9, section 2.1, as follows.

2.1. Group 1 comprises dangerous fluids. A dangerous fluid is a substance or preparation covered by the definitions in Article 2 (2) of Council Directive 67/548/EEC of 27 June 1967 on the approximation of the laws, regulations and administrative provisions relating to the classification, packaging and labelling of dangerous substances […]

Group 1 comprises fluids defined as:

— explosive,

— extremely flammable,

— highly flammable,

THIS DOCUMENT BELONGS TO FMB Feinwerk- und Meßtechnik GmbH AND IS ISSUED ON CONDITION THAT IT IS NOT COPIED, REPRINTED OR DISCLOSED EITHER WHOLLY OR IN PART TO A THIRD PARTY WITHOUT PRIOR CONSENT IN WRITING FROM FMB.

— flammable (where the maximum allowable temperature is above flashpoint),
— very toxic,
— toxic,
— oxidizing.
2.2. Group 2 comprises all other fluids not referred to in 2.1.

Water belongs to group 2, and the criteria to be considered is 1.3 (b), water having a vapour pressure of 0.5 bar only at 80 °C. With the maximum pipe diameter of 10 mm (i. e. the DN is 10), the piping employed in the monochromators and baffle slits does not fall into the scope of the directive.

The maximum pressure the cooling hoses are tested at is 10 bar. The product DN·PS therefore is 5000 bar with a DN of 500, well above the pipe diameters used in both baffle slit and monochromator.

10.2 Welding Standard

This is described in attached document:

- 20160083_BSA_RFP300794_FIS-MET_UHVOE_Welding-plan.pdf

11 Spare Parts

This is described in attached document:

- 20160083_BSA_RFP300794_FIS-MET_UHVOE_Spare_Parts_Rev00.pdf

11.1 Maintenance and lubrication schedule

- M1 vertical drives‘ leadscew to be greased once a year with Molykote DS Paste.
- M2 – M6 Mirror drives’ leadscew to be greased once a year with Molykote DS Paste.

12 Changes and Additions since PDR

12.1 Further Modifications

This sections lists major changes that were not part of the FDR modifications.

With Stand of January 2017 there no further modifications are planed.

13 Minutes of FDR Meeting

This is described in attached document:

- 20160083_BSARFP300794_FIS-MET_UHVOE_FDR_Minutes_Rev00.pdf

THIS DOCUMENT BELONGS TO FMB Feinwerk- und Meßtechnik GmbH AND IS ISSUED ON CONDITION THAT IT IS NOT COPIED, REPRINTED OR DISCLOSED EITHER WHOLLY OR IN PART TO A THIRD PARTY WITHOUT PRIOR CONSENT IN WRITING FROM FMB.