MECHANICAL UTILITIES TEST REPORT

THIS SECTION TO BE COMPLETED BY COGNIZANT ENGINEER

PREPARED BY: O'BRIEN LIFE #: 24021 DATE: 8/28/17

TEST LOCATION: FIS/MET APPLICABLE DRAWING(S): SEE ATTACHMENT

ATTACHMENT Y / N (CIRCLE ONE)

DESCRIPTION OF COMPONENT/SYSTEM:
1/2" PROCESS AIR LINE

MAXIMUM ALLOWABLE WORKING PRESSURE (PSIG) OF COMPONENT/SYSTEM:
90 PSIG

MECHANICAL UTILITY SYSTEM (MARK AN "X" ON ALL THAT APPLY):

PRIMARY DI WATER ☐ SECONDARY DI WATER ☐ ALUMINUM DI WATER ☐

PROCESS CHILLED WATER ☐ COMPRESSED AIR ☒ GASEOUS NITROGEN ☐ OTHER ☐

IF 'OTHER' IS SELECTED, DESCRIBE THE SYSTEM:

TEST GAUGE INFORMATION:

RANGE: ~~0-150~~ 0 - 300 PSIG UNIT OF MEASUREMENT: PSIG

SERIAL NUMBER: M014904 CALIBRATION DUE DATE: 9/1/2017

OPERATIONS CONDUCTED (SELECT ALL THAT APPLY):

LEAK TEST ☒ FLUSH ☐ HYDROSTATIC PRESSURE TEST ☐ PNEUMATIC PRESSURE TEST ☒

OTHER ☐

IF 'OTHER' IS SELECTED, DESCRIBE THE OPERATION:

MECHANICAL UTILITIES TEST REPORT – PAGE 2

LEAK TEST:

THIS SECTION TO BE COMPLETED BY COGNIZANT ENGINEER

TEST FLUID: AIR FLUID TEMPERATURE AMBIENT °F FLUID PRESSURE: ≤ 60 PSIG

METHOD USED (VISUAL, SOAP BUBBLES, VACUUM, ETC.): VISUAL GAUGE DECAY

TEST DURATION SHALL BE AS LONG AS REQUIRED TO EVALUATE POTENTIAL LEAK POINTS

THIS SECTION TO BE COMPLETED BY QUALIFIED TECHNICIAN

CONDUCTED BY: MD / AR DATE: 8/23/17

RECORD ACTUAL LEAK TEST DURATION HERE: 2 Hours

NO LEAKAGE PRESENT ☑ SIGNATURE: [signature]

FLUSH:

THIS SECTION TO BE COMPLETED BY COGNIZANT ENGINEER

FLUSH FLUID: _____ FLUID TEMPERATURE _____°F FLUID PRESSURE: _____ PSIG

FLUSH DURATION: _____ MINUTES/HOURS (CIRCLE ONE)

FLUSH PARAMETERS: _____

_____ (WRITE "N/A" IF NONE APPLY)

THIS SECTION TO BE COMPLETED BY QUALIFIED TECHNICIAN

CONDUCTED BY: _____ DATE: _____

COMMENTS:

_____

_____

ACCEPTABLE ☑ SIGNATURE: [signature]

PRESSURE TEST:

THIS SECTION TO BE COMPLETED BY COGNIZANT ENGINEER

TYPE: HYDROSTATIC ☐ PNEUMATIC ☒ TEST FLUID: _____ FLUID TEMPERATURE _____°F

SPECIFIED STARTING PRESSURE: 60 ***PSIG*** ***SPECIFIED MAXIMUM TEST PRESSURE:*** ~~150~~ 110 ***PSIG***

SPECIFIED PRESSURE AND TIME INCREMENTS: 10/10 ***PSIG/MINUTES***

SPECIFIED MAXIMUM TEST PRESSURE DURATION: 10 ***MINUTES (10 MINUTES MINIMUM)***

MECHANICAL UTILITIES TEST REPORT – PAGE 3

PRESSURE TEST (CONTINUED):

THIS SECTION TO BE COMPLETED BY QUALIFIED TECHNICIAN

CONDUCTED BY: MD DATE: 8/28/17

ENVIRONMENTAL FACTORS: TEMPERATURE _____ °F RELATIVE HUMIDITY _____ %

PRESSURE TEST DATA TO BE COMPLETED DURING TEST			
SPECIFIED PRESSURE	ACTUAL PRESSURE	SPECIFIED PRESSURE	ACTUAL PRESSURE
60	60		
70	70		
80	80		
90	90		
100	100		
110	110		

PRESSURE TEST ACCEPTABLE ☑ TECHNICIAN SIGNATURE/LIFE NUMBER: 25531 [signature]

WITNESS SIGNATURE/LIFE NUMBER: [signature] 22895

OTHER:

THIS SECTION TO BE COMPLETED BY COGNIZANT ENGINEER

DETAILED DESCRIPTION OF OPERATION (ATTACHMENT Y / N):

_____

_____

_____

TEST FLUID: _____ FLUID TEMPERATURE _____ °F FLUID PRESSURE: _____ PSIG

THIS SECTION TO BE COMPLETED BY QUALIFIED TECHNICIAN

CONDUCTED BY: _____ DATE: _____

ENVIRONMENTAL FACTORS: TEMPERATURE _____ °F RELATIVE HUMIDITY _____ %

				%
SPECIFIED	ACTUAL	SPECIFIED	ACTUAL	VARIANCE

MECHANICAL UTILITIES TEST REPORT – PAGE 4

OTHER (CONTINUED):

THIS SECTION TO BE COMPLETED BY QUALIFIED TECHNICIAN

NOTES:

THIS SECTION TO BE COMPLETED BY COGNIZANT ENGINEER

NOTES:

TEST ACCEPTABLE ☐

TECHNICIAN SIGNATURE/LIFE NUMBER: _____

WITNESS SIGNATURE/LIFE NUMBER: _____

FIS/MET PRESSURE TEST REPORT ATTACHMENT

R. O'BRIEN 08/28/2017

DO NOT INCLUDE PRV 158 OR PRESSURE GAUGES IN PRESSURE TEST

SEE PRESSURE TEST REPORT FOR FULL PARAMETERS

QTYSHOWN	TYPE	ID #	SIZE	ITEM	MATERIAL	CONNECTION	MAKE	MODEL	DESCRIPTION
5	VLV	8	1/2"	BALL	BRONZE	SWEAT	APOLLO	70-243-27	1/2", LEVER LOCKING, STAINLESS BALL & STEM
5	VLV	9	1/2"	BALL	BRONZE	NPT	APOLLO	70-143-27	1/2", LEVER LOCKING, STAINLESS BALL & STEM
6	PG	1	1/4"	PRESSURE GAUGE	STAINLESS	NPT	ASHCROFT	25 1009 SWL 02L 0-160	0-160 PSIG NEEDLE GAUGE
6	VLV	2	1/4"	BALL	BRONZE	NPT	APOLLO	70-141-27	1/4", LEVER LOCKING, STAINLESS BALL & STEM
1	VLV	23	1/4"	RELIEF	BRASS	NPT	MCMASTER	48435K72	85 PSIG POP PRESSURE; ASME 'NB' STAMPED
1	FL	7	1/2"	FILTER/REGULATOR COMBO	METAL W/SIGHT GLASS	NPT	ARO	P39344-610	173 CFM W/ 5 MICRON MESH

22BMA-CA-VLV-1150
22BMA-CA-VLV-1151
22BMA-CA-VLV-1152
22BMA-CA-PG-1153
22BMA-CA-FL-1154
22BMA-CA-VLV-1155
22BMA-CA-PG-1156
22BMA-CA-VLV-1157
22BMA-CA-PRV-1158
22BMA-CA-VLV-1159
22BMA-CA-VLV-1160
22BMA-CA-VLV-1161
22BMA-CA-PG-1162
22BMA-CA-VLV-1163
22BMB-CA-VLV-1164
22BMB-CA-PG-1165
22BMB-CA-VLV-1166
22IDA-CA-VLV-1167
22IDA-CA-VLV-1168
22IDA-CA-PG-1169
22IDA-CA-VLV-1170
22IDB-CA-VLV-1171
22IDB-CA-PG-1172
22IDB-CA-VLV-1173

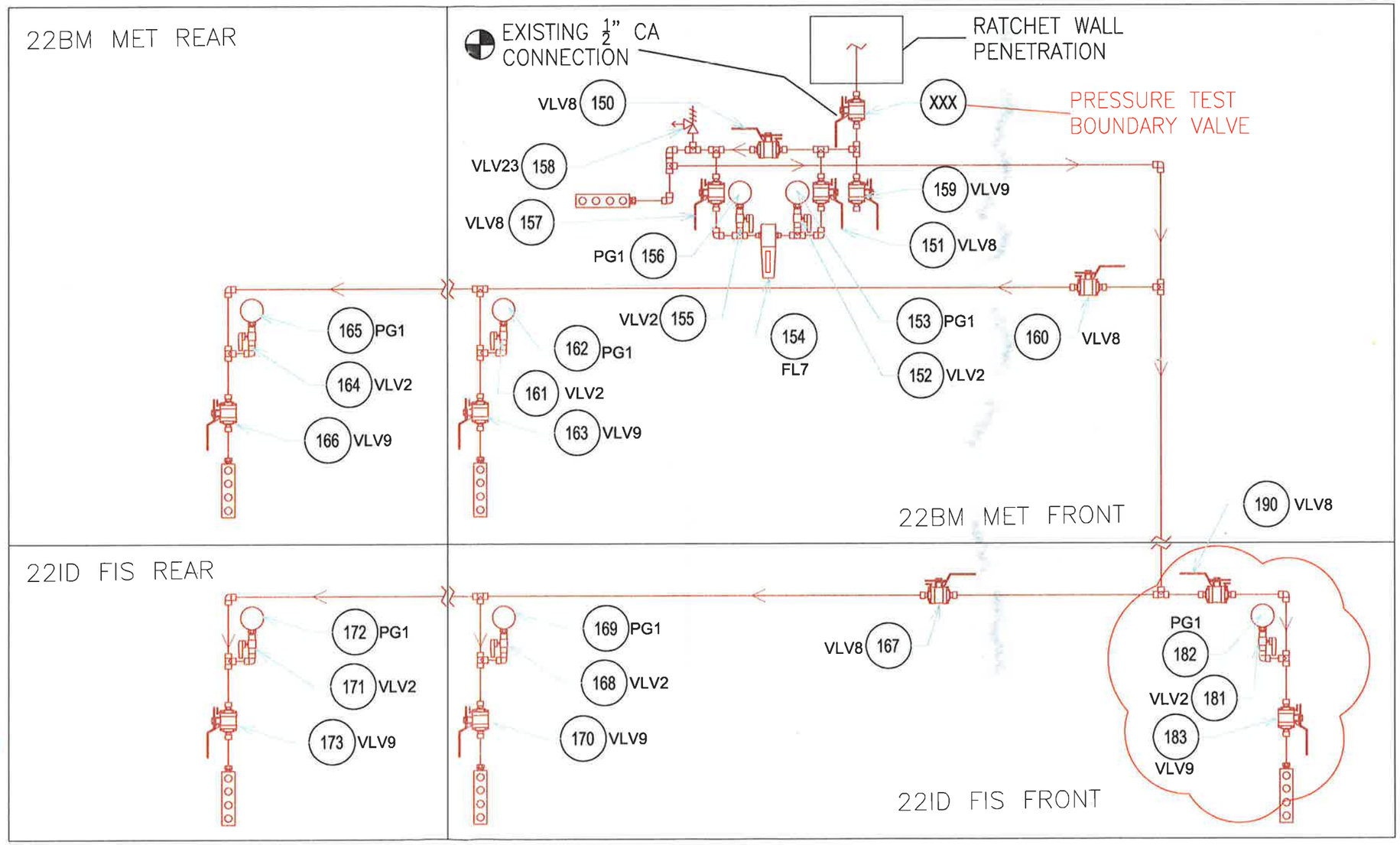

SHEET 1 OF 1

NEW SCOPE EQUIPMENT SCHEDULE

QTYSHOWN	TYPE	ID #	SIZE	ITEM	MATERIAL	CONNECTION	MAKE	MODEL	DESCRIPTION
1	VLV	9	1/2"	BALL	BRONZE	NPT	APOLLO	70-143-27	LEVER LOCKING, STAINLESS BALL & STEM
1	PG	1	1/4"	PRESSURE GAUGE	STAINLESS	NPT	ASHCROFT	25 1009 SWL 02L 0-160	0-160 PSIG NEEDLE GAUGE
1	VLV	2	1/4"	BALL	BRONZE	NPT	APOLLO	70-141-27	LEVER LOCKING, STAINLESS BALL & STEM

NEW SCOPE	
DRAWING ID	BNL TAG ID
181	22IDA-CA-PG-1181
182	22IDA-CA-VLV-1182
183	22IDA-CA-VLV-1183
190	22IDA-CA-VLV-1190

R. O'BRIEN – 06/1/2017 – REVISED 07/20/2017 & 08/28/2017

MECHANICAL UTILITIES TEST REPORT

THIS SECTION TO BE COMPLETED BY COGNIZANT ENGINEER

PREPARED BY: R. O'BRIEN LIFE #: 24021 DATE: 9/12/17

TEST LOCATION: FIS-MET CABINS APPLICABLE DRAWING(S): ATTACHMENT 1

ATTACHMENT (Y)/ N (CIRCLE ONE)

DESCRIPTION OF COMPONENT/SYSTEM:
GN2, He, & Ar

MAXIMUM ALLOWABLE WORKING PRESSURE (PSIG) OF COMPONENT/SYSTEM:
135 PSIG

MECHANICAL UTILITY SYSTEM (MARK AN "X" ON ALL THAT APPLY):

PRIMARY DI WATER ☐ SECONDARY DI WATER ☐ ALUMINUM DI WATER ☐

PROCESS CHILLED WATER ☐ COMPRESSED AIR ☐ GASEOUS NITROGEN ☒ OTHER ☒

IF 'OTHER' IS SELECTED, DESCRIBE THE SYSTEM:
Helium AND Argon 1/4" GAS LINES

~~TEST~~ STANDARD GAUGE INFORMATION: REFERENCE GAUGE USED FROM STANDARD

RANGE: 0-2000 UNIT OF MEASUREMENT: PSIG

SERIAL NUMBER: 1154760 CALIBRATION DUE DATE: 2/8/18

OPERATIONS CONDUCTED (SELECT ALL THAT APPLY):

LEAK TEST ☒ FLUSH ☐ HYDROSTATIC PRESSURE TEST ☐ PNEUMATIC PRESSURE TEST ☒

OTHER ☐

IF 'OTHER' IS SELECTED, DESCRIBE THE OPERATION:

MECHANICAL UTILITIES TEST REPORT – PAGE 3

PRESSURE TEST (CONTINUED):

THIS SECTION TO BE COMPLETED BY QUALIFIED TECHNICIAN

CONDUCTED BY: J. Ahmad DATE: 9-18-17

ENVIRONMENTAL FACTORS: TEMPERATURE _____ °F RELATIVE HUMIDITY _____ %

PRESSURE TEST DATA TO BE COMPLETED DURING TEST			
SPECIFIED PRESSURE	ACTUAL PRESSURE	SPECIFIED PRESSURE	ACTUAL PRESSURE
60	61	130	130
70	70	140	138
80	81	150	149
90	90		
100	101		
110	111		
120	120		

PRESSURE TEST ACCEPTABLE ☐ TECHNICIAN SIGNATURE/LIFE NUMBER: 24562

WITNESS SIGNATURE/LIFE NUMBER: 22429

OTHER:

THIS SECTION TO BE COMPLETED BY COGNIZANT ENGINEER

DETAILED DESCRIPTION OF OPERATION (ATTACHMENT Y / N):

_____

_____

_____

TEST FLUID: _____ FLUID TEMPERATURE _____ °F FLUID PRESSURE: _____ PSIG

THIS SECTION TO BE COMPLETED BY QUALIFIED TECHNICIAN

CONDUCTED BY: _____ DATE: _____

ENVIRONMENTAL FACTORS: TEMPERATURE _____ °F RELATIVE HUMIDITY _____ %

				%
SPECIFIED	ACTUAL	SPECIFIED	ACTUAL	VARIANCE

MECHANICAL UTILITIES TEST REPORT – PAGE 2

LEAK TEST:

THIS SECTION TO BE COMPLETED BY COGNIZANT ENGINEER

TEST FLUID: AIR FLUID TEMPERATURE AMBIENT °F FLUID PRESSURE: ≤ 60 PSIG

METHOD USED (VISUAL, SOAP BUBBLES, VACUUM, ETC.): VISUAL, GAUGE DECAY, ETC.

TEST DURATION SHALL BE AS LONG AS REQUIRED TO EVALUATE POTENTIAL LEAK POINTS

THIS SECTION TO BE COMPLETED BY QUALIFIED TECHNICIAN

CONDUCTED BY: J. Alvarad DATE: 9-18-17

RECORD ACTUAL LEAK TEST DURATION HERE: 10 min

NO LEAKAGE PRESENT ☒ SIGNATURE: [signature]

FLUSH:

THIS SECTION TO BE COMPLETED BY COGNIZANT ENGINEER

FLUSH FLUID: _____ FLUID TEMPERATURE _____ °F FLUID PRESSURE: _____ PSIG

FLUSH DURATION: _____ MINUTES/HOURS (CIRCLE ONE)

FLUSH PARAMETERS: _____

_____ (WRITE "N/A" IF NONE APPLY)

THIS SECTION TO BE COMPLETED BY QUALIFIED TECHNICIAN

CONDUCTED BY: _____ DATE: _____

COMMENTS:

_____

_____

ACCEPTABLE ☐ SIGNATURE: _____

PRESSURE TEST:

THIS SECTION TO BE COMPLETED BY COGNIZANT ENGINEER

TYPE: HYDROSTATIC ☐ PNEUMATIC ☒ TEST FLUID: AIR FLUID TEMPERATURE AMBIENT °F

SPECIFIED STARTING PRESSURE: 60 ***PSIG*** ***SPECIFIED MAXIMUM TEST PRESSURE:*** 150 ***PSIG***

SPECIFIED PRESSURE AND TIME INCREMENTS: 10/10 ***PSIG/MINUTES***

SPECIFIED MAXIMUM TEST PRESSURE DURATION: 10 ***MINUTES (10 MINUTES MINIMUM)***

MECHANICAL UTILITIES TEST REPORT – PAGE 4

OTHER (CONTINUED):

THIS SECTION TO BE COMPLETED BY QUALIFIED TECHNICIAN

NOTES:

THIS SECTION TO BE COMPLETED BY COGNIZANT ENGINEER

NOTES:

TEST ACCEPTABLE ☐

TECHNICIAN SIGNATURE/LIFE NUMBER: _____

WITNESS SIGNATURE/LIFE NUMBER: _____

QTYSHOWN	TYPE	ID #	SIZE	ITEM	MATERIAL	CONNECTION	MAKE	MODEL	DESCRIPTION
8	VLV	1	1/4"	BALL	STAINLESS	NPT	SWAGELOK	SS-43GEF4-LL	1 PIECE, LATCH LOCK HANDLE
14	PG	2	1/4"	PRESSURE GAUGE	STAINLESS	NPT	ASHCROFT	25 1009 SWL 02L 0-60	0-60 PSIG NEEDLE GAUGE
8	VLV	33	1/4"	BALL	STAINLESS	COMPRESSION	SWAGELOK	SS-43GS4-LL	1 PIECE, LATCH LOCK HANDLE
6	VLV	2	1/4"	BALL	BRONZE	NPT	APOLLO	70-141-27	1/4", LEVER LOCKING, STAINLESS BALL & STEM
10	VLV	9	1/2"	BALL	BRONZE	NPT	APOLLO	70-143-27	1/2", LEVER LOCKING, STAINLESS BALL & STEM

BNL TAG ID
22IDF-AR-VLV-1175
22IDF-AR-VLV-1176
22IDF-AR-PG-1177
22IDA-AR-VLV-1178
22IDA-AR-PG-1179
22IDA-AR-VLV-1180
22BMF-HE-VLV-1130
22BMF-HE-VLV-1131
22BMF-HE-PG-1132
22BMB-HE-VLV-1133
22BMB-HE-VLV-1134
22BMB-HE-PG-1135
22BMA-HE-VLV-1136
22BMA-HE-VLV-1137
22BMA-HE-PG-1138
22IDF-HE-VLV-1139
22IDF-HE-VLV-1140
22IDF-HE-PG-1141
22IDA-HE-VLV-1142
22IDA-HE-VLV-1143
22IDA-HE-PG-1144
22IDB-HE-VLV-1145
22IDB-HE-VLV-1146
22IDB-HE-PG-1147
22BMA-GN2-VLV-1100
22BMA-GN2-VLV-1101
22BMF-GN2-VLV-1102
22BMF-GN2-PG-1103
22BMF-GN2-VLV-1104
22BMC-GN2-VLV-1105
22BMC-GN2-PG-1106
22BMA-GN2-VLV-1107
22BMA-GN2-VLV-1108
22BMA-GN2-VLV-1109
22BMA-GN2-PG-1110
22BMA-GN2-VLV-1111
22BMB-GN2-VLV-1112
22BMB-GN2-PG-1113
22BMB-GN2-VLV-1114
22IDA-GN2-VLV-1115
22IDA-GN2-VLV-1116
22IDA-GN2-PG-1117
22IDA-GN2-VLV-1118
22IDB-GN2-VLV-1119
22IDB-GN2-PG-1120
22IDB-GN2-VLV-1121

DO NOT INCLUDE PRESSURE GAUGES IN PRESSURE TEST
JUMPER SYSTEMS TOGETHER AND TEST BOTH SIDES OF EACH VALVE
USE ONE COMMON SOURCE POINT

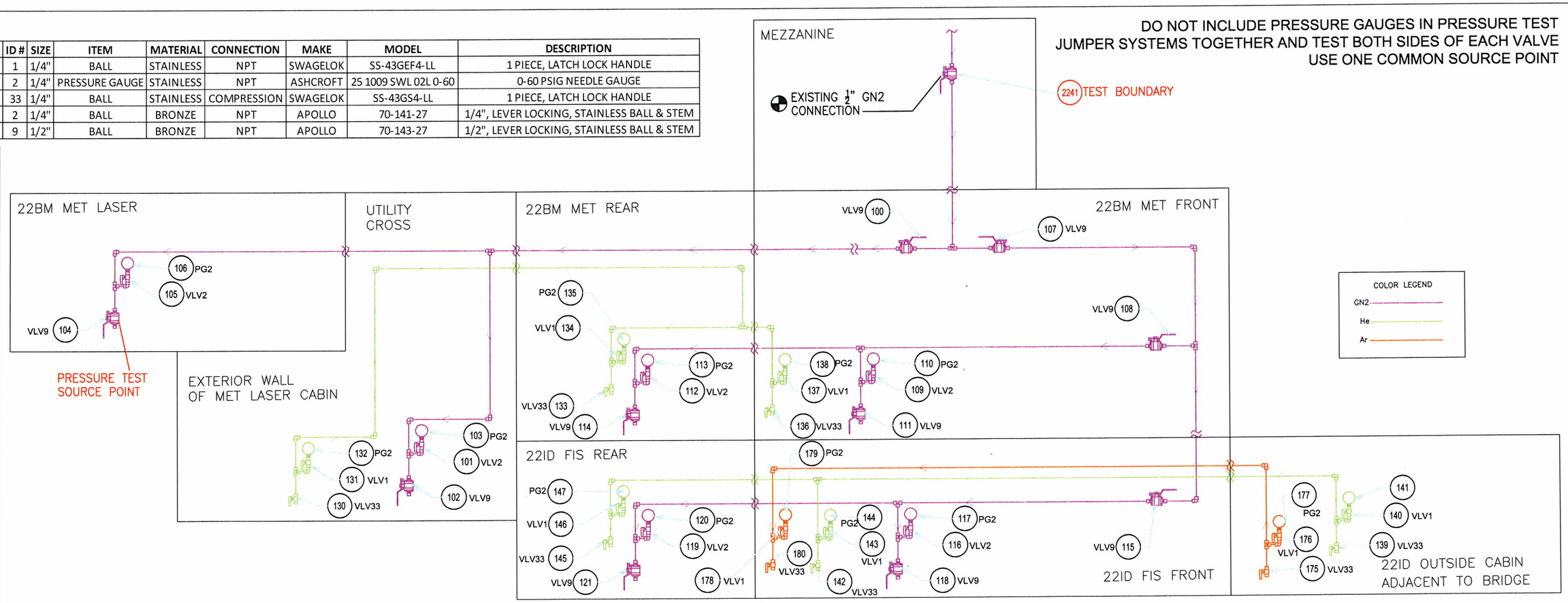

FIS-MET GAS LINE INSTALLATION PRESSURE TEST REPORT ATTACHMENT
R. O'BRIEN 09/12/2017
SEE PRESSURE TEST REPORT FOR TEST PARAMETERS

MECHANICAL UTILITIES TEST REPORT

THIS SECTION TO BE COMPLETED BY COGNIZANT ENGINEER

PREPARED BY: R. O'BRIEN LIFE #: 24021 DATE: 9/24/18

TEST LOCATION: CELL 23 IN TUNNEL APPLICABLE DRAWING(S): ATTACHED

ATTACHMENT Y / N (CIRCLE ONE)

DESCRIPTION OF COMPONENT/SYSTEM:
M1 COOLING CIRCUIT

MAXIMUM ALLOWABLE WORKING PRESSURE (PSIG) OF COMPONENT/SYSTEM:
150

MECHANICAL UTILITY SYSTEM (MARK AN "X" ON ALL THAT APPLY):

PRIMARY DI WATER ☐ SECONDARY DI WATER ☒ ALUMINUM DI WATER ☐

PROCESS CHILLED WATER ☐ COMPRESSED AIR ☐ GASEOUS NITROGEN ☐ OTHER ☐

IF 'OTHER' IS SELECTED, DESCRIBE THE SYSTEM:

TEST GAUGE INFORMATION:

RANGE: 0-2000 UNIT OF MEASUREMENT: PSIG

SERIAL NUMBER: 1154760 CALIBRATION DUE DATE: 3/6/19

OPERATIONS CONDUCTED (SELECT ALL THAT APPLY):

LEAK TEST ☒ FLUSH ☐ HYDROSTATIC PRESSURE TEST ☒ PNEUMATIC PRESSURE TEST ☐

OTHER ☐

IF 'OTHER' IS SELECTED, DESCRIBE THE OPERATION:

MECHANICAL UTILITIES TEST REPORT – PAGE 3

PRESSURE TEST (CONTINUED):

THIS SECTION TO BE COMPLETED BY QUALIFIED TECHNICIAN

CONDUCTED BY: J. Ahmed DATE: 9-25-18

ENVIRONMENTAL FACTORS (OPTIONAL): TEMPERATURE 78 °F RELATIVE HUMIDITY _____ %

PRESSURE TEST DATA TO BE COMPLETED DURING TEST			
SPECIFIED PRESSURE	ACTUAL PRESSURE	SPECIFIED PRESSURE	ACTUAL PRESSURE
50	52	225	225
~~2~~ 75	75		
100	101		
125	125		
150	151		
175	176		
200	203		

PRESSURE TEST ACCEPTABLE ☑ TECHNICIAN SIGNATURE/LIFE NUMBER: [signature] 24853

WITNESS SIGNATURE/LIFE NUMBER: [signature] 22429

OTHER:

THIS SECTION TO BE COMPLETED BY COGNIZANT ENGINEER

DETAILED DESCRIPTION OF OPERATION (ATTACHMENT Y / N):

_____

_____

_____

TEST FLUID: _____ FLUID TEMPERATURE _____ °F FLUID PRESSURE: _____ PSIG

THIS SECTION TO BE COMPLETED BY QUALIFIED TECHNICIAN

CONDUCTED BY: _____ DATE: _____

ENVIRONMENTAL FACTORS (OPTIONAL): TEMPERATURE _____ °F RELATIVE HUMIDITY _____ %

SPECIFIED	ACTUAL	SPECIFIED	ACTUAL	% VARIANCE

MECHANICAL UTILITIES TEST REPORT – PAGE 2

LEAK TEST:

THIS SECTION TO BE COMPLETED BY COGNIZANT ENGINEER

TEST FLUID: H_2O FLUID TEMPERATURE AMBIENT °F FLUID PRESSURE: <50 PSIG

METHOD USED (VISUAL, SOAP BUBBLES, VACUUM, ETC.): VISUAL / DECAY

TEST DURATION SHALL BE AS LONG AS REQUIRED TO EVALUATE POTENTIAL LEAK POINTS

THIS SECTION TO BE COMPLETED BY QUALIFIED TECHNICIAN

CONDUCTED BY: J. Alvarez DATE: 9-25-18

RECORD ACTUAL LEAK TEST DURATION HERE: 5 min

NO LEAKAGE PRESENT ☑ SIGNATURE: [signature]

FLUSH:

THIS SECTION TO BE COMPLETED BY COGNIZANT ENGINEER

FLUSH FLUID: _____ FLUID TEMPERATURE _____ °F FLUID PRESSURE: _____ PSIG

FLUSH DURATION: _____ MINUTES/HOURS (CIRCLE ONE)

FLUSH PARAMETERS: _____

_____ (WRITE "N/A" IF NONE APPLY)

THIS SECTION TO BE COMPLETED BY QUALIFIED TECHNICIAN

CONDUCTED BY: _____ DATE: _____

COMMENTS:

_____

_____

ACCEPTABLE ☐ SIGNATURE: _____

PRESSURE TEST:

THIS SECTION TO BE COMPLETED BY COGNIZANT ENGINEER

TYPE: HYDROSTATIC ☒ PNEUMATIC ☐ TEST FLUID: H_2O FLUID TEMPERATURE AMBIENT °F

SPECIFIED STARTING PRESSURE: 50 ***PSIG*** ***SPECIFIED MAXIMUM TEST PRESSURE:*** 225 ***PSIG***

SPECIFIED PRESSURE AND TIME INCREMENTS: 25 / 5 ***PSIG/MINUTES***

SPECIFIED MAXIMUM TEST PRESSURE DURATION: 10 ***MINUTES (10 MINUTES MINIMUM)***

MECHANICAL UTILITIES TEST REPORT – PAGE 4

OTHER (CONTINUED):

THIS SECTION TO BE COMPLETED BY QUALIFIED TECHNICIAN

NOTES:

THIS SECTION TO BE COMPLETED BY COGNIZANT ENGINEER

NOTES:

TEST ACCEPTABLE ☐

TECHNICIAN SIGNATURE/LIFE NUMBER: _____

WITNESS SIGNATURE/LIFE NUMBER: _____

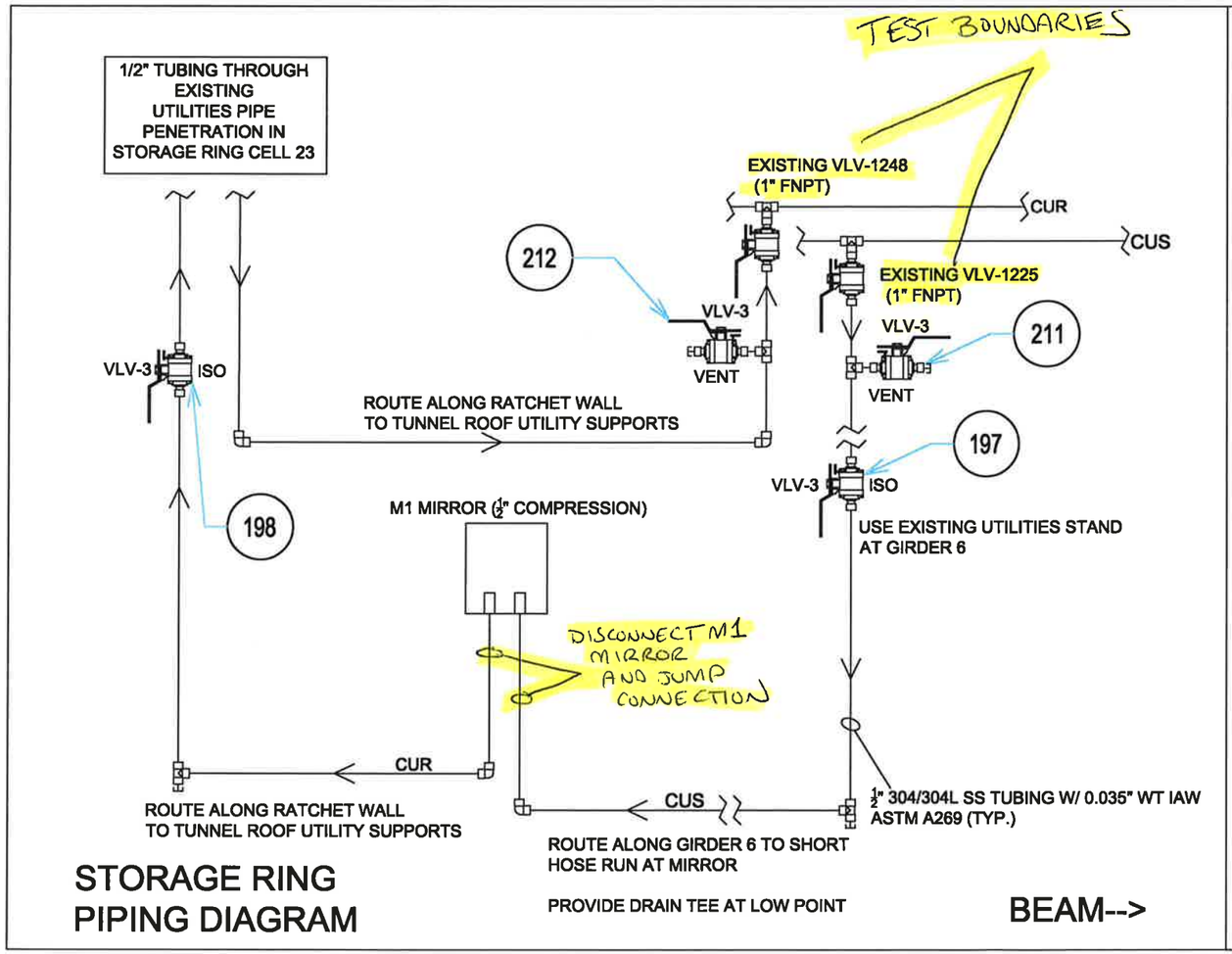

STORAGE RING PIPING DIAGRAM

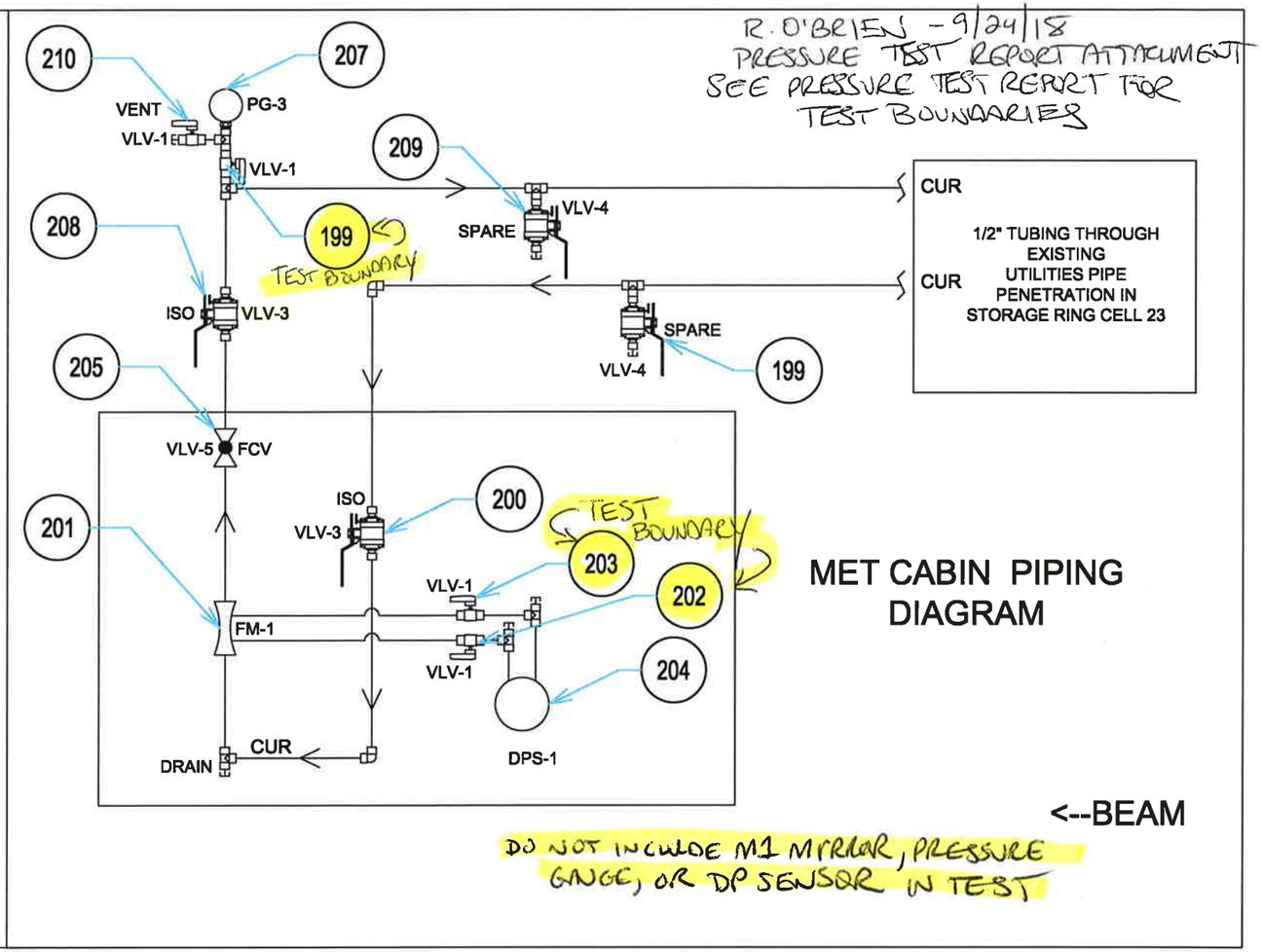

MET CABIN PIPING DIAGRAM

MECHANICAL UTILITIES TEST REPORT

THIS SECTION TO BE COMPLETED BY COGNIZANT ENGINEER

PREPARED BY: R. O'BRIEN LIFE #: 24021 DATE: 8/22/18

TEST LOCATION: SB-5 APPLICABLE DRAWING(S): VES-2 ATTACH.

ATTACHMENT (Y/N) (CIRCLE ONE)

DESCRIPTION OF COMPONENT/SYSTEM:
M1 MIRROR FOR FIS/MET

MAXIMUM ALLOWABLE WORKING PRESSURE (PSIG) OF COMPONENT/SYSTEM:
150 PSIG

MECHANICAL UTILITY SYSTEM (MARK AN "X" ON ALL THAT APPLY):

PRIMARY DI WATER ☐ SECONDARY DI WATER ☒ ALUMINUM DI WATER ☐

PROCESS CHILLED WATER ☐ COMPRESSED AIR ☐ GASEOUS NITROGEN ☐ OTHER ☐

IF 'OTHER' IS SELECTED, DESCRIBE THE SYSTEM:

TEST GAUGE INFORMATION: REF. GAUGE WIKA 1154760 DUE 4/6/19

RANGE: 0-400 PSIG UNIT OF MEASUREMENT: PSIG

SERIAL NUMBER: M014749 CALIBRATION DUE DATE: 9/15/18

OPERATIONS CONDUCTED (SELECT ALL THAT APPLY):

LEAK TEST ☒ FLUSH ☐ HYDROSTATIC PRESSURE TEST ☒ PNEUMATIC PRESSURE TEST ☐

OTHER ☐

IF 'OTHER' IS SELECTED, DESCRIBE THE OPERATION:

MECHANICAL UTILITIES TEST REPORT – PAGE 2

LEAK TEST:

THIS SECTION TO BE COMPLETED BY COGNIZANT ENGINEER

TEST FLUID: H_2O FLUID TEMPERATURE AMBIENT °F FLUID PRESSURE: ~50 PSIG

METHOD USED (VISUAL, SOAP BUBBLES, VACUUM, ETC.): VISUAL & GAUGE DECAY

TEST DURATION SHALL BE AS LONG AS REQUIRED TO EVALUATE POTENTIAL LEAK POINTS

THIS SECTION TO BE COMPLETED BY QUALIFIED TECHNICIAN

CONDUCTED BY: Briguccia DATE: 8-22-18

RECORD ACTUAL LEAK TEST DURATION HERE: 20 MIN

NO LEAKAGE PRESENT ☒ SIGNATURE: V. Briguccia

FLUSH:

THIS SECTION TO BE COMPLETED BY COGNIZANT ENGINEER

FLUSH FLUID: _____ FLUID TEMPERATURE _____°F FLUID PRESSURE: _____ PSIG

FLUSH DURATION: _____ MINUTES/HOURS (CIRCLE ONE)

FLUSH PARAMETERS: _____

_____ (WRITE "N/A" IF NONE APPLY)

THIS SECTION TO BE COMPLETED BY QUALIFIED TECHNICIAN

CONDUCTED BY: _____ DATE: _____

COMMENTS:

_____

_____

ACCEPTABLE ☐ SIGNATURE: _____

PRESSURE TEST:

THIS SECTION TO BE COMPLETED BY COGNIZANT ENGINEER

TYPE: HYDROSTATIC ☒ PNEUMATIC ☐ TEST FLUID: H_2O FLUID TEMPERATURE AMBIENT °F

SPECIFIED STARTING PRESSURE: 50 ***PSIG*** ***SPECIFIED MAXIMUM TEST PRESSURE:*** 150 ***PSIG***

SPECIFIED PRESSURE AND TIME INCREMENTS: 25/10 ***PSIG/MINUTES***

SPECIFIED MAXIMUM TEST PRESSURE DURATION: 10 ***MINUTES (10 MINUTES MINIMUM)***

MECHANICAL UTILITIES TEST REPORT – PAGE 3

PRESSURE TEST (CONTINUED):

THIS SECTION TO BE COMPLETED BY QUALIFIED TECHNICIAN

CONDUCTED BY: Briguccia DATE: 8-22-18

ENVIRONMENTAL FACTORS (OPTIONAL): TEMPERATURE _____ °F RELATIVE HUMIDITY_____ %

PRESSURE TEST DATA TO BE COMPLETED DURING TEST			
SPECIFIED PRESSURE	ACTUAL PRESSURE	SPECIFIED PRESSURE	ACTUAL PRESSURE
50	55		
75	76		
100	101		
125	127		
150	152		

PRESSURE TEST ACCEPTABLE ☑ TECHNICIAN SIGNATURE/LIFE NUMBER: Briguccia 25646

WITNESS SIGNATURE/LIFE NUMBER: [illegible] 22429

OTHER:

THIS SECTION TO BE COMPLETED BY COGNIZANT ENGINEER

DETAILED DESCRIPTION OF OPERATION (ATTACHMENT Y / N):

_____

_____

_____

TEST FLUID: _____ FLUID TEMPERATURE _____°F FLUID PRESSURE: _____ PSIG

THIS SECTION TO BE COMPLETED BY QUALIFIED TECHNICIAN

CONDUCTED BY: _____ DATE: _____

ENVIRONMENTAL FACTORS (OPTIONAL): TEMPERATURE _____ °F RELATIVE HUMIDITY_____ %

				%
SPECIFIED	ACTUAL	SPECIFIED	ACTUAL	VARIANCE

MECHANICAL UTILITIES TEST REPORT – PAGE 4

OTHER (CONTINUED):

THIS SECTION TO BE COMPLETED BY QUALIFIED TECHNICIAN

NOTES:

THIS SECTION TO BE COMPLETED BY COGNIZANT ENGINEER

NOTES:

TEST ACCEPTABLE ☐

TECHNICIAN SIGNATURE/LIFE NUMBER: _____

WITNESS SIGNATURE/LIFE NUMBER: _____

M1 PRESSURE TEST REPORT ATTACHMENT #2

R. O'BRIEN
FSMET
M1 MIRROR

Water

M1 Mirror cooling
½" swagelok
TEST CONNECTIONS
AND BOUNDARY

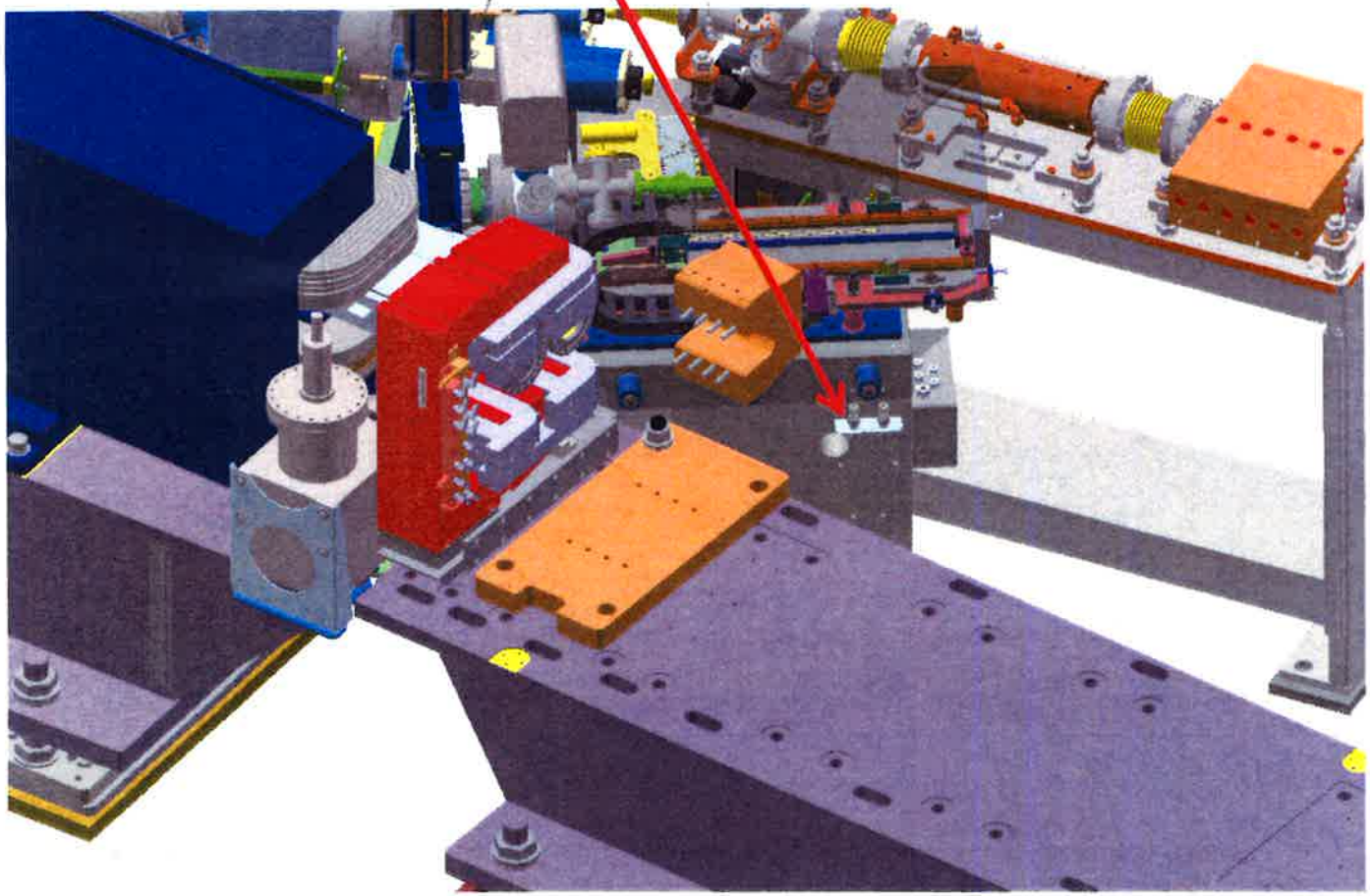

M1 PRESSURE TEST REPORT ATTACHMENT #1

FISMET
M1 MIRROR

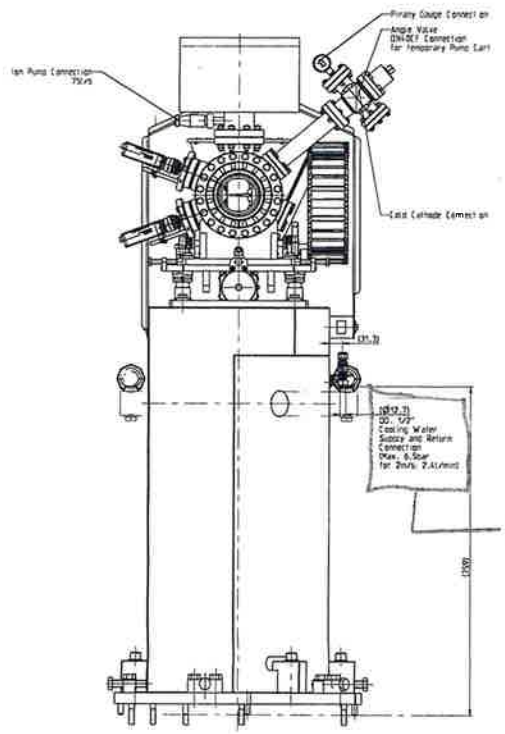

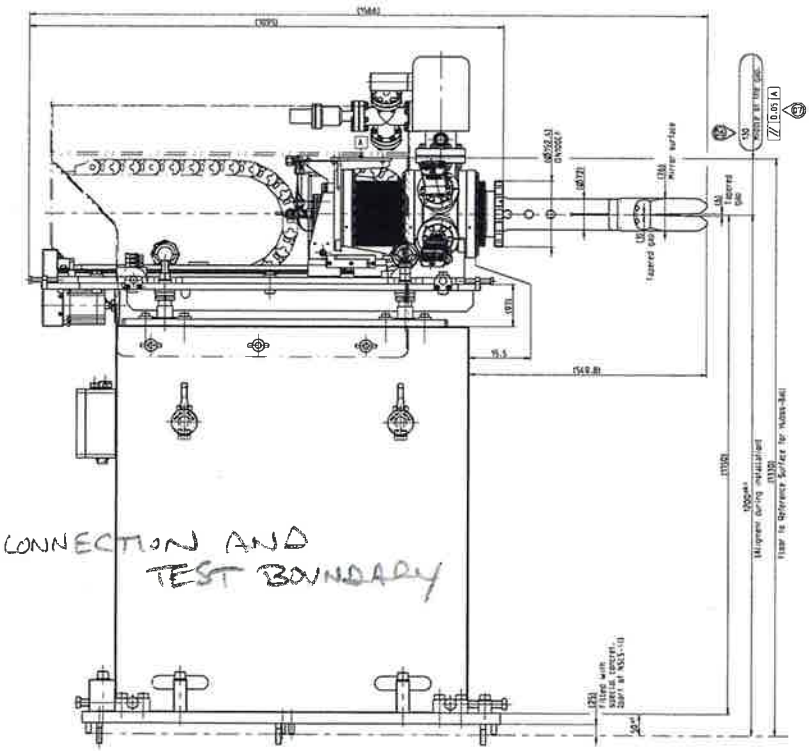

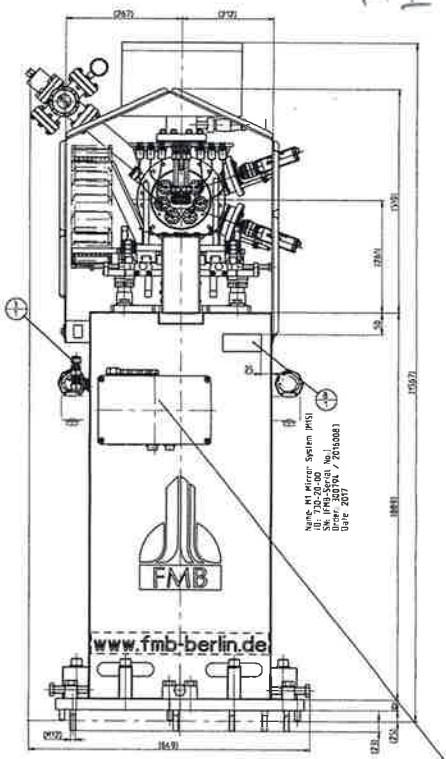

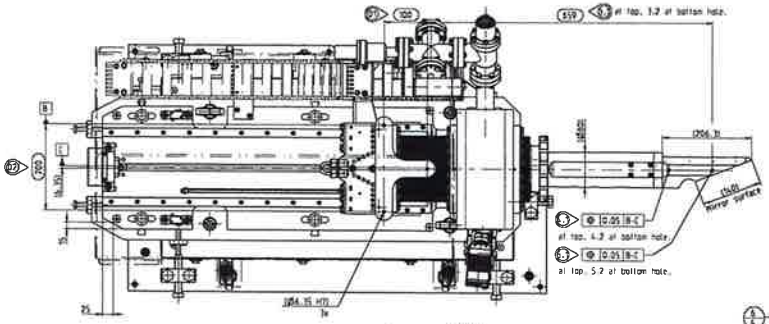

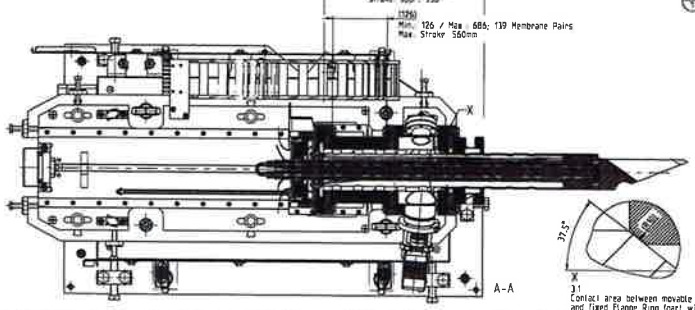

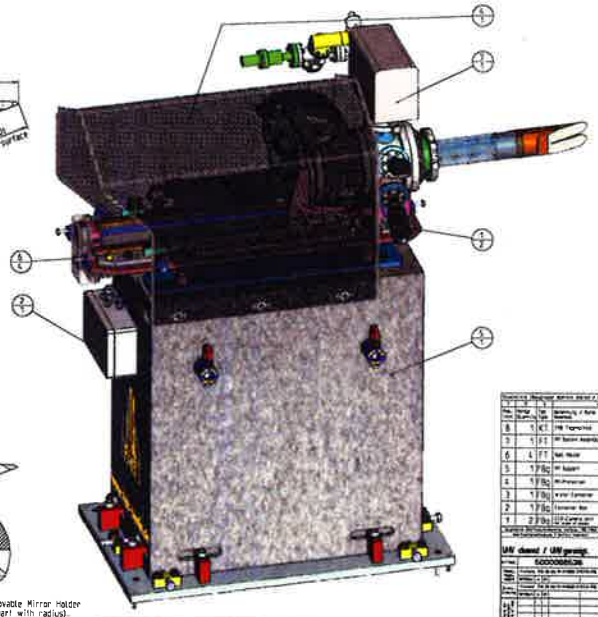

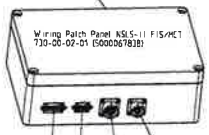

Prüfspezifikation / test specification ESRF/CNS/IS-CI Seite/page Requirements for Design and Fabrication of Components for NSLS-II UHV-Systems Attachment 9 ISI LT-CNS-RSI-SR-VA-002 Design Fab. of Components UHV Sys		
Prüfung / Test name	Soll-wert / Specified value	Ist-wert / Unit
Visual internal and external inspection: All vacuum sealings and vacuum surface free from defects, pitting cracks & indentations.		☐ passed
4.7.1 Dimensional inspection		☐ passed
Electrical check: Verify that all electrical components, including all solenoids and relays, can be powered on and off. Verify that electronics function normally without error signals.		☐ passed
Motion system test: Verify that all motions interpreted and manual are implemented with the specified motion direction, range, resolution, repeatability, stability, and accuracy. Verify that the limits and encoders are implemented as specified. Verify that all motors are running smoothly and are properly tuned.		☐ passed
Water pressure test (10µm filtered): Test Pressure (1.5x operation pressure)	9	bar
Total test time	10	min
Intervals of recording	2	min
No evidence of water leakage.		☐ passed
Flow rate test (10µm filtered): Pressure drop between supply and return	~3	bar
Water flow (>6L/min)	to be reported	L/min
4.7.2 He-leaktest: Before bake-out at room temperature	$<2\times10^{-10}$	mbar l/s
After bake-out at room temperature	$<2\times10^{-10}$	mbar l/s
(Test device sensibility $<1\times10^{-12}$mbar l/s. Pressure during leak test: $<1\times10^{-0}$mbar)		
4.7.3 Outgassing Rate (for smooth surfaces after 100 hours under vacuum)	$<1\times10^{-10}$	mbar l/s cm²
4.7.5 RGA (Test device sensibility $<1\times10^{-12}$mbar partial pressure) TP=Total Pressure		
AMU 2 (H2) is the dominant mass	60	% of TP
AMU 18 (H2O) is the 2nd highest mass	FMB intern	☐ passed
AMU 28 (CO) is the 3rd highest mass	FMB intern	☐ passed
AMU 44 (CO2) is the 4th highest mass	FMB intern	☐ passed
All >AMU 28	10	% of TP
Sum of AMUs 39+41+43+45 and greater	1	% of TP
AMU 2 = 1x AMU 18 (Suitably well spaced) AMU 16 = AMU 18 and AMU 28 = 4x AMU 32 (Peak height)	FMB intern	☐ passed
4.7.4 Bake-out cycle: Temperature (max. 125K/h)		
Stainless Steel Components	250 ± 5	°C
Components with installed Optics*	100 ± 5	°C
Aluminium Components	150 ± 5	°C
Time	>16	hours
*) check and ask again before start!		
Final pressure	$<2.67\times10^{-10}$	mbar
Inner surface	32.200	cm²
Note for storage and shipping: Chamber covered with aluminium foil, plastic caps and filled with dry Nitrogen. The chamber has to be wrapped in polythene bag and stored in shock proof box.		

Pos.	Menge / Qty.	Benennung / Description	Bestellnummer / Order No.	Bemerkungen / Remarks	Pos.	Benennung / Name
8	1	KF	[illegible]	[illegible]		
7	1	[illegible]	[illegible]	[illegible]		
6	1	FT	[illegible]	[illegible]		
5	1	[illegible]	[illegible]	[illegible]		
4	1	[illegible]	[illegible]	[illegible]		
3	1	[illegible]	[illegible]	[illegible]		
2	1	[illegible]	[illegible]	[illegible]		
1	2	[illegible]	[illegible]	[illegible]		

UHV cleaned / UHV geeignet: SOOOOOBBCDE

Benennung / Name: M1 Mirror System (MIS)

730-20-00 A

MECHANICAL UTILITIES TEST REPORT

THIS SECTION TO BE COMPLETED BY COGNIZANT ENGINEER

PREPARED BY: R. O'BRIEN LIFE #: 24021 DATE: 8/22/18

TEST LOCATION: SB-5 APPLICABLE DRAWING(S): VES-2 ATTACH.

ATTACHMENT (Y/N) (CIRCLE ONE)

DESCRIPTION OF COMPONENT/SYSTEM:
M1 MIRROR FOR FIS/MET

MAXIMUM ALLOWABLE WORKING PRESSURE (PSIG) OF COMPONENT/SYSTEM:
150 PSIG

MECHANICAL UTILITY SYSTEM (MARK AN "X" ON ALL THAT APPLY):

PRIMARY DI WATER ☐ SECONDARY DI WATER ☒ ALUMINUM DI WATER ☐

PROCESS CHILLED WATER ☐ COMPRESSED AIR ☐ GASEOUS NITROGEN ☐ OTHER ☐

IF 'OTHER' IS SELECTED, DESCRIBE THE SYSTEM:

TEST GAUGE INFORMATION: REF. GAUGE WIKA 1154760 DUE 4/6/19

RANGE: 0-400 PSIG UNIT OF MEASUREMENT: PSIG

SERIAL NUMBER: M014749 CALIBRATION DUE DATE: 9/15/18

OPERATIONS CONDUCTED (SELECT ALL THAT APPLY):

LEAK TEST ☒ FLUSH ☐ HYDROSTATIC PRESSURE TEST ☒ PNEUMATIC PRESSURE TEST ☐

OTHER ☐

IF 'OTHER' IS SELECTED, DESCRIBE THE OPERATION:

MECHANICAL UTILITIES TEST REPORT – PAGE 2

LEAK TEST:

THIS SECTION TO BE COMPLETED BY COGNIZANT ENGINEER

TEST FLUID: H_2O FLUID TEMPERATURE AMBIENT °F FLUID PRESSURE: ~50 PSIG

METHOD USED (VISUAL, SOAP BUBBLES, VACUUM, ETC.): VISUAL & GAUGE DECAY

TEST DURATION SHALL BE AS LONG AS REQUIRED TO EVALUATE POTENTIAL LEAK POINTS

THIS SECTION TO BE COMPLETED BY QUALIFIED TECHNICIAN

CONDUCTED BY: Briguccia DATE: 8-22-18

RECORD ACTUAL LEAK TEST DURATION HERE: 20 MIN

NO LEAKAGE PRESENT ☒ SIGNATURE: V. Briguccia

FLUSH:

THIS SECTION TO BE COMPLETED BY COGNIZANT ENGINEER

FLUSH FLUID: _____ FLUID TEMPERATURE _____°F FLUID PRESSURE: _____ PSIG

FLUSH DURATION: _____ MINUTES/HOURS (CIRCLE ONE)

FLUSH PARAMETERS: _____

_____ (WRITE "N/A" IF NONE APPLY)

THIS SECTION TO BE COMPLETED BY QUALIFIED TECHNICIAN

CONDUCTED BY: _____ DATE: _____

COMMENTS:

_____

_____

ACCEPTABLE ☐ SIGNATURE: _____

PRESSURE TEST:

THIS SECTION TO BE COMPLETED BY COGNIZANT ENGINEER

TYPE: HYDROSTATIC ☒ PNEUMATIC ☐ TEST FLUID: H_2O FLUID TEMPERATURE AMBIENT °F

SPECIFIED STARTING PRESSURE: 50 ***PSIG*** ***SPECIFIED MAXIMUM TEST PRESSURE:*** 150 ***PSIG***

SPECIFIED PRESSURE AND TIME INCREMENTS: 25/10 ***PSIG/MINUTES***

SPECIFIED MAXIMUM TEST PRESSURE DURATION: 10 ***MINUTES (10 MINUTES MINIMUM)***

MECHANICAL UTILITIES TEST REPORT – PAGE 3

PRESSURE TEST (CONTINUED):

THIS SECTION TO BE COMPLETED BY QUALIFIED TECHNICIAN

CONDUCTED BY: Briguccia DATE: 8-22-18

ENVIRONMENTAL FACTORS (OPTIONAL): TEMPERATURE _____ °F RELATIVE HUMIDITY_____ %

PRESSURE TEST DATA TO BE COMPLETED DURING TEST			
SPECIFIED PRESSURE	ACTUAL PRESSURE	SPECIFIED PRESSURE	ACTUAL PRESSURE
50	55		
75	76		
100	101		
125	127		
150	152		

PRESSURE TEST ACCEPTABLE ☑ TECHNICIAN SIGNATURE/LIFE NUMBER: Briguccia 25646

WITNESS SIGNATURE/LIFE NUMBER: [illegible] 22429

OTHER:

THIS SECTION TO BE COMPLETED BY COGNIZANT ENGINEER

DETAILED DESCRIPTION OF OPERATION (ATTACHMENT Y / N):

_____

_____

_____

TEST FLUID: _____ FLUID TEMPERATURE _____°F FLUID PRESSURE: _____ PSIG

THIS SECTION TO BE COMPLETED BY QUALIFIED TECHNICIAN

CONDUCTED BY: _____ DATE: _____

ENVIRONMENTAL FACTORS (OPTIONAL): TEMPERATURE _____ °F RELATIVE HUMIDITY_____ %

				%
SPECIFIED	ACTUAL	SPECIFIED	ACTUAL	VARIANCE

MECHANICAL UTILITIES TEST REPORT – PAGE 4

OTHER (CONTINUED):

THIS SECTION TO BE COMPLETED BY QUALIFIED TECHNICIAN

NOTES:

THIS SECTION TO BE COMPLETED BY COGNIZANT ENGINEER

NOTES:

TEST ACCEPTABLE ☐

TECHNICIAN SIGNATURE/LIFE NUMBER: _____

WITNESS SIGNATURE/LIFE NUMBER: _____

M1 PRESSURE TEST REPORT ATTACHMENT #2

R. O'BRIEN
FSMET
M1 MIRROR

Water

M1 Mirror cooling
½" swagelok
TEST CONNECTIONS
AND BOUNDARY

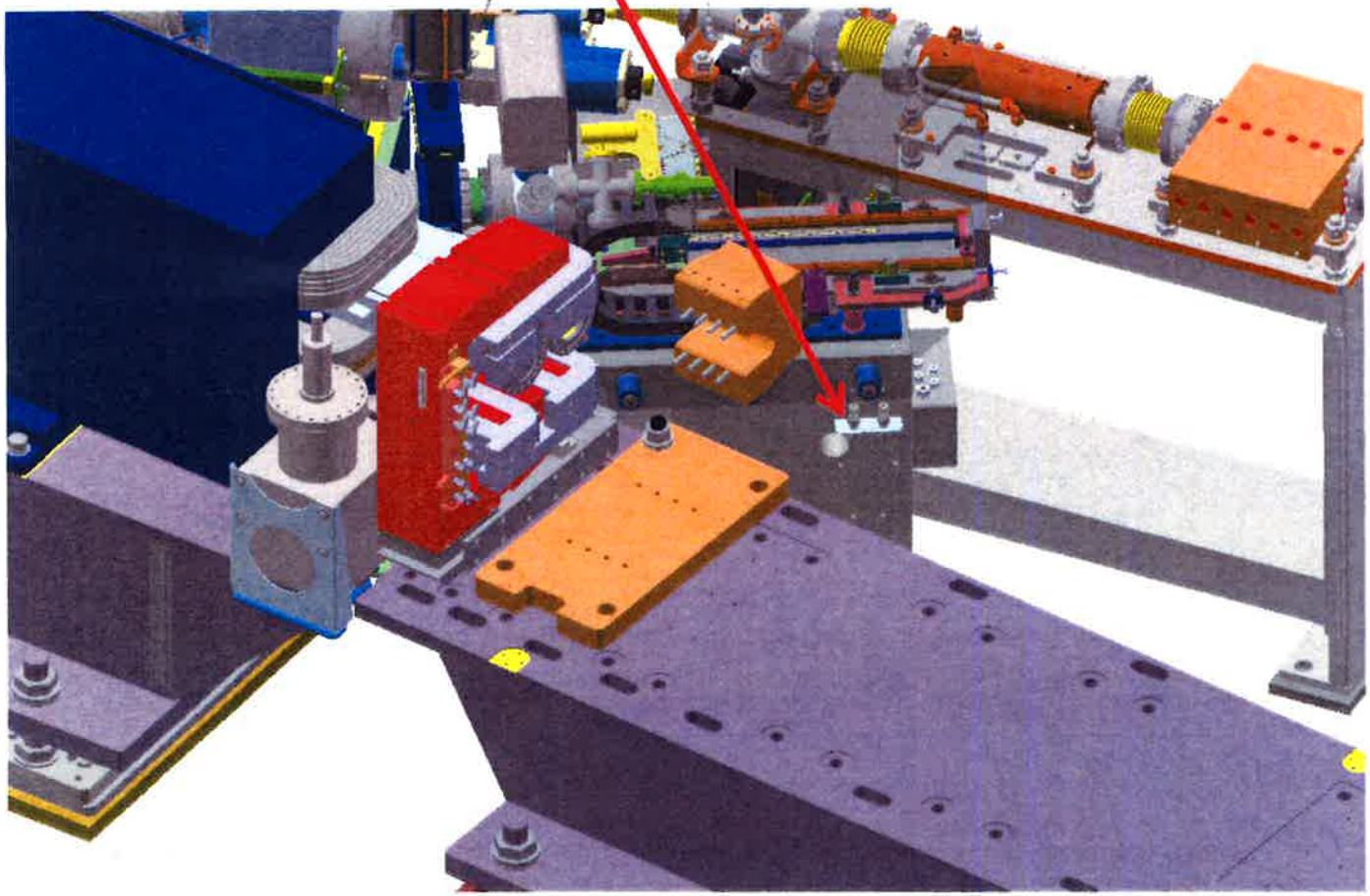

M1 PRESSURE TEST REPORT ATTACHMENT #1

FISMET
M1 MIRROR

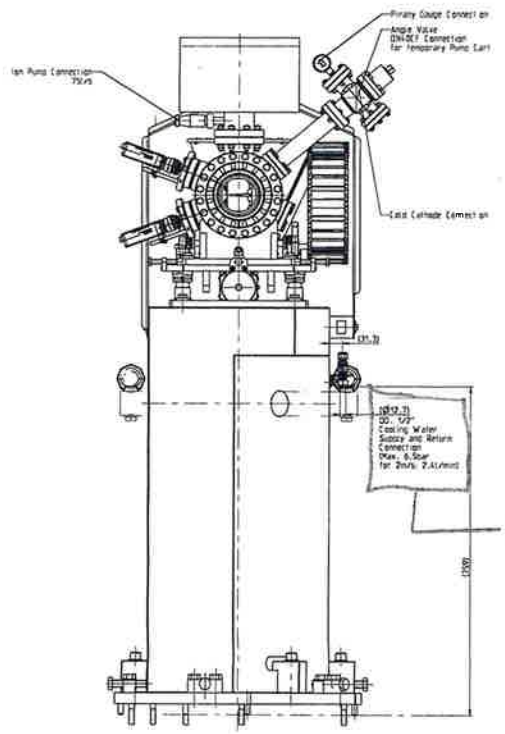

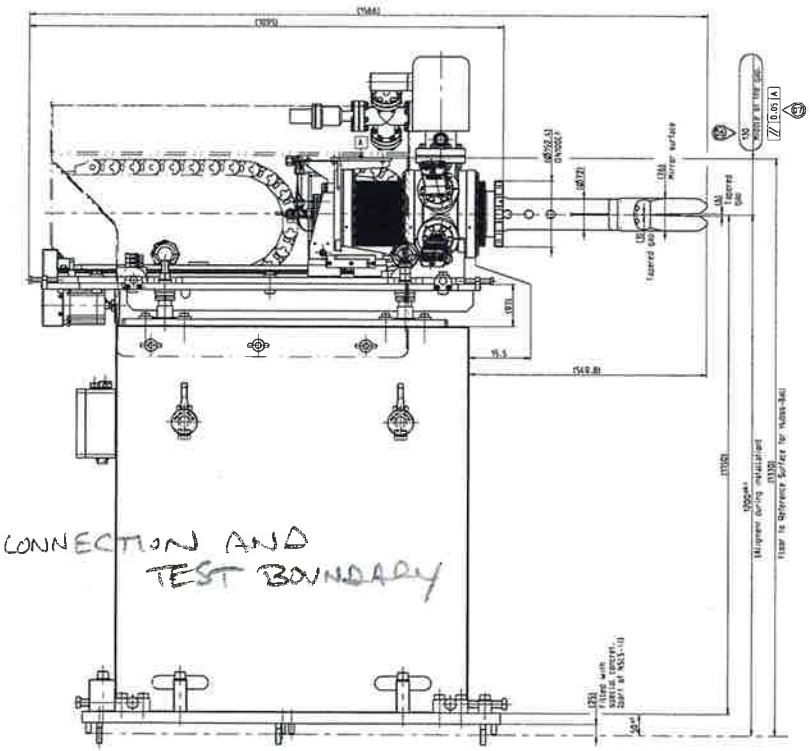

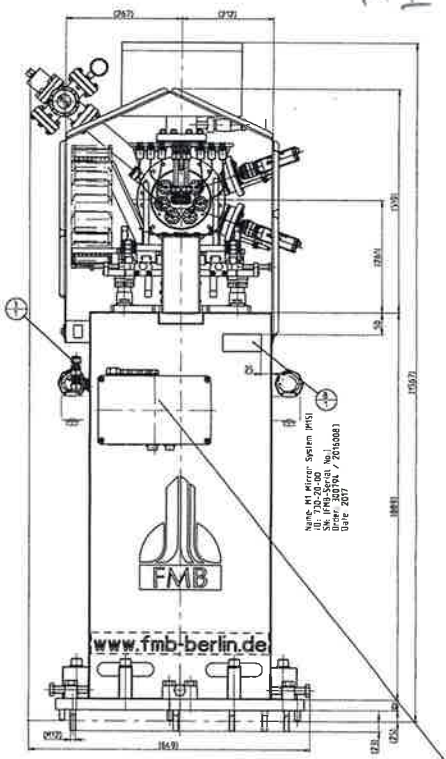

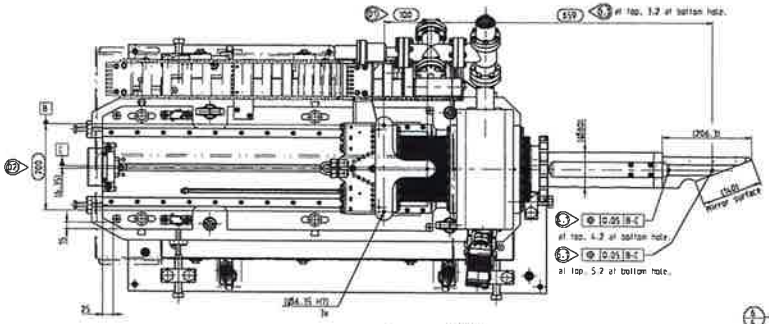

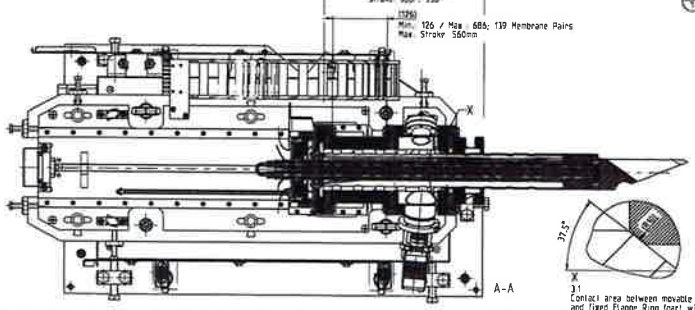

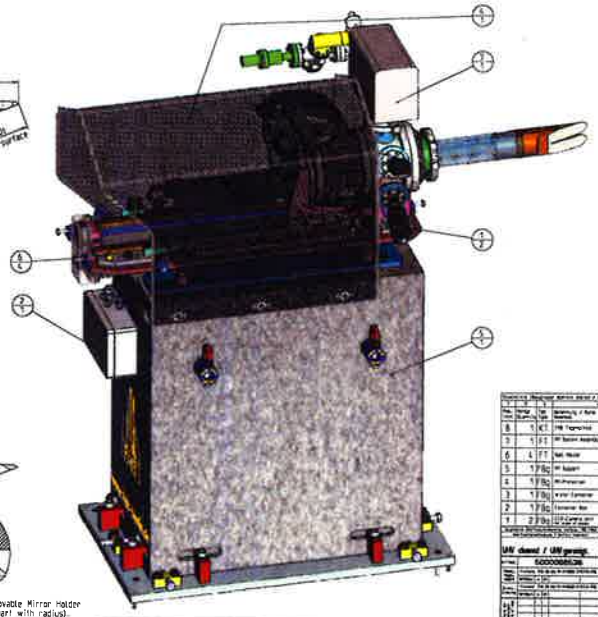

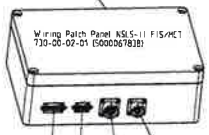

Prüfspezifikation / test specification ESRF/CNS/IS-CI Seite/page Requirements for Design and Fabrication of Components for NSLS-II UHV-Systems Attachment 9 ISI LT-CNS-RSI-SR-VA-002 Design Fab. of Components UHV Sys		
Prüfung / Test name	Soll-wert / Specified value	Ist-wert / Unit
Visual internal and external inspection: All vacuum sealings and vacuum surface free from defects, pitting cracks & indentations.		☐ passed
4.7.1 Dimensional inspection		☐ passed
Electrical check: Verify that all electrical components, including all solenoids and relays, can be powered on and off. Verify that electronics function normally without error signals.		☐ passed
Motion system test: Verify that all motions interpreted and manual are implemented with the specified motion direction, range, resolution, repeatability, stability, and accuracy. Verify that the limits and encoders are implemented as specified. Verify that all motors are running smoothly and are properly tuned.		☐ passed
Water pressure test (10µm filtered): Test Pressure (1.5x operation pressure)	9	bar
Total test time	10	min
Intervals of recording	2	min
No evidence of water leakage.		☐ passed
Flow rate test (10µm filtered): Pressure drop between supply and return	~3	bar
Water flow (>6L/min)	to be reported	L/min
4.7.2 He-leaktest: Before bake-out at room temperature	$<2\times10^{-10}$	mbar l/s
After bake-out at room temperature	$<2\times10^{-10}$	mbar l/s
(Test device sensibility $<1\times10^{-12}$mbar l/s. Pressure during leak test: $<1\times10^{-0}$mbar)		
4.7.3 Outgassing Rate (for smooth surfaces after 100 hours under vacuum)	$<1\times10^{-10}$	mbar l/s cm²
4.7.5 RGA (Test device sensibility $<1\times10^{-12}$mbar partial pressure) TP=Total Pressure		
AMU 2 (H2) is the dominant mass	60	% of TP
AMU 18 (H2O) is the 2nd highest mass	FMB intern	☐ passed
AMU 28 (CO) is the 3rd highest mass	FMB intern	☐ passed
AMU 44 (CO2) is the 4th highest mass	FMB intern	☐ passed
All >AMU 28	10	% of TP
Sum of AMUs 39+41+43+45 and greater	1	% of TP
AMU 2 = 1x AMU 18 (Suitably well spaced) AMU 16 = AMU 18 and AMU 28 = 4x AMU 32 (Peak height)	FMB intern	☐ passed
4.7.4 Bake-out cycle: Temperature (max. 125K/h)		
Stainless Steel Components	250 ± 5	°C
Components with installed Optics*	100 ± 5	°C
Aluminium Components	150 ± 5	°C
Time	>16	hours
*) check and ask again before start!		
Final pressure	$<2.67\times10^{-10}$	mbar
Inner surface	32.200	cm²
Note for storage and shipping: Chamber covered with aluminium foil, plastic caps and filled with dry Nitrogen. The chamber has to be wrapped in polythene bag and stored in shock proof box.		

Pos.	Menge / Qty.	Benennung / Description	Bestellnummer / Order No.	Bemerkungen / Remarks	Pos.	Benennung / Name
8	1	KF	[illegible]	[illegible]		
7	1	[illegible]	[illegible]	[illegible]		
6	1	FT	[illegible]	[illegible]		
5	1	[illegible]	[illegible]	[illegible]		
4	1	[illegible]	[illegible]	[illegible]		
3	1	[illegible]	[illegible]	[illegible]		
2	1	[illegible]	[illegible]	[illegible]		
1	2	[illegible]	[illegible]	[illegible]		

UHV cleaned / UHV geeignet: SOOOOOBBCDE

Benennung / Name: M1 Mirror System (MIS)

730-20-00 A

MECHANICAL UTILITIES TEST REPORT

THIS SECTION TO BE COMPLETED BY COGNIZANT ENGINEER

PREPARED BY: R. O'BRIEN LIFE #: 24021 DATE: 9/12/17

TEST LOCATION: FISMET CABINS APPLICABLE DRAWING(S): ATTACHMENT

ATTACHMENT (Y) / N (CIRCLE ONE)

DESCRIPTION OF COMPONENT/SYSTEM:
PCHW PIPING/VALES

MAXIMUM ALLOWABLE WORKING PRESSURE (PSIG) OF COMPONENT/SYSTEM:
75 PSIG

MECHANICAL UTILITY SYSTEM (MARK AN "X" ON ALL THAT APPLY):

PRIMARY DI WATER ☐ SECONDARY DI WATER ☐ ALUMINUM DI WATER ☐

PROCESS CHILLED WATER ☒ COMPRESSED AIR ☐ GASEOUS NITROGEN ☐ OTHER ☐

IF 'OTHER' IS SELECTED, DESCRIBE THE SYSTEM:

STANDARD
~~TEST~~ GAUGE INFORMATION: REFERENCE GAUGE USED FROM STANDARD

RANGE: 0-2000 UNIT OF MEASUREMENT: PSIG

SERIAL NUMBER: 1154760 CALIBRATION DUE DATE: 2/8/18

OPERATIONS CONDUCTED (SELECT ALL THAT APPLY):

LEAK TEST ☒ FLUSH ☒ HYDROSTATIC PRESSURE TEST ☒ PNEUMATIC PRESSURE TEST ☐

OTHER ☐

IF 'OTHER' IS SELECTED, DESCRIBE THE OPERATION:

MECHANICAL UTILITIES TEST REPORT – PAGE 3

PRESSURE TEST (CONTINUED):

THIS SECTION TO BE COMPLETED BY QUALIFIED TECHNICIAN

CONDUCTED BY: J. Almond DATE: 9-19-17

ENVIRONMENTAL FACTORS: TEMPERATURE _____ °F RELATIVE HUMIDITY _____ %

PRESSURE TEST DATA TO BE COMPLETED DURING TEST			
SPECIFIED PRESSURE	ACTUAL PRESSURE	SPECIFIED PRESSURE	ACTUAL PRESSURE
60	63	130	130
70	70	140	140
80	81	150	150
90	90		
100	101		
110	110		
120	120		

PRESSURE TEST ACCEPTABLE ☐ TECHNICIAN SIGNATURE/LIFE NUMBER: [signature] /24892

WITNESS SIGNATURE/LIFE NUMBER: [signature] 22429

OTHER:

THIS SECTION TO BE COMPLETED BY COGNIZANT ENGINEER

DETAILED DESCRIPTION OF OPERATION (ATTACHMENT Y / N):

_____

_____

_____

TEST FLUID: _____ FLUID TEMPERATURE _____ °F FLUID PRESSURE: _____ PSIG

THIS SECTION TO BE COMPLETED BY QUALIFIED TECHNICIAN

CONDUCTED BY: _____ DATE: _____

ENVIRONMENTAL FACTORS: TEMPERATURE _____ °F RELATIVE HUMIDITY _____ %

				%
SPECIFIED	ACTUAL	SPECIFIED	ACTUAL	VARIANCE

MECHANICAL UTILITIES TEST REPORT – PAGE 2

LEAK TEST:

THIS SECTION TO BE COMPLETED BY COGNIZANT ENGINEER

TEST FLUID: AIR FLUID TEMPERATURE AMBIENT °F FLUID PRESSURE: ≥ 60 PSIG

METHOD USED (VISUAL, SOAP BUBBLES, VACUUM, ETC.): VISUAL, GAUGE INSPECTION, ETC.

TEST DURATION SHALL BE AS LONG AS REQUIRED TO EVALUATE POTENTIAL LEAK POINTS

THIS SECTION TO BE COMPLETED BY QUALIFIED TECHNICIAN

CONDUCTED BY: J. Alvarez DATE: 9-19-17

RECORD ACTUAL LEAK TEST DURATION HERE: 20 min.

NO LEAKAGE PRESENT ☑ SIGNATURE:

FLUSH:

THIS SECTION TO BE COMPLETED BY COGNIZANT ENGINEER

FLUSH FLUID: WATER FLUID TEMPERATURE AMBIENT °F FLUID PRESSURE: HOUSE PSIG

FLUSH DURATION: 20 MINUTES/HOURS (CIRCLE ONE)

FLUSH PARAMETERS: N/A

(WRITE "N/A" IF NONE APPLY)

THIS SECTION TO BE COMPLETED BY QUALIFIED TECHNICIAN

CONDUCTED BY: J. Alvarez DATE: 9-19-17

COMMENTS:

ACCEPTABLE ☐ SIGNATURE:

PRESSURE TEST:

THIS SECTION TO BE COMPLETED BY COGNIZANT ENGINEER

TYPE: HYDROSTATIC ☒ PNEUMATIC ☐ TEST FLUID: WATER FLUID TEMPERATURE AMB. °F

SPECIFIED STARTING PRESSURE: 60 ***PSIG*** ***SPECIFIED MAXIMUM TEST PRESSURE:*** 150 ***PSIG***

SPECIFIED PRESSURE AND TIME INCREMENTS: 10/10 ***PSIG/MINUTES***

SPECIFIED MAXIMUM TEST PRESSURE DURATION: 10 ***MINUTES (10 MINUTES MINIMUM)***

MECHANICAL UTILITIES TEST REPORT – PAGE 4

OTHER (CONTINUED):

THIS SECTION TO BE COMPLETED BY QUALIFIED TECHNICIAN

NOTES:

THIS SECTION TO BE COMPLETED BY COGNIZANT ENGINEER

NOTES:

TEST ACCEPTABLE ☐

TECHNICIAN SIGNATURE/LIFE NUMBER: _____

WITNESS SIGNATURE/LIFE NUMBER: _____

FIS-MET PCHW INSTALLATION PRESSURE TEST REPORT ATTACHMENT
R. O'BRIEN 09/12/2017
SEE PRESSURE TEST REPORT FOR TEST PARAMETERS
DO NOT INCLUDE PRESSURE GAUGES IN PRESSURE TEST AND TEST BOTH SIDES OF EACH VALVE

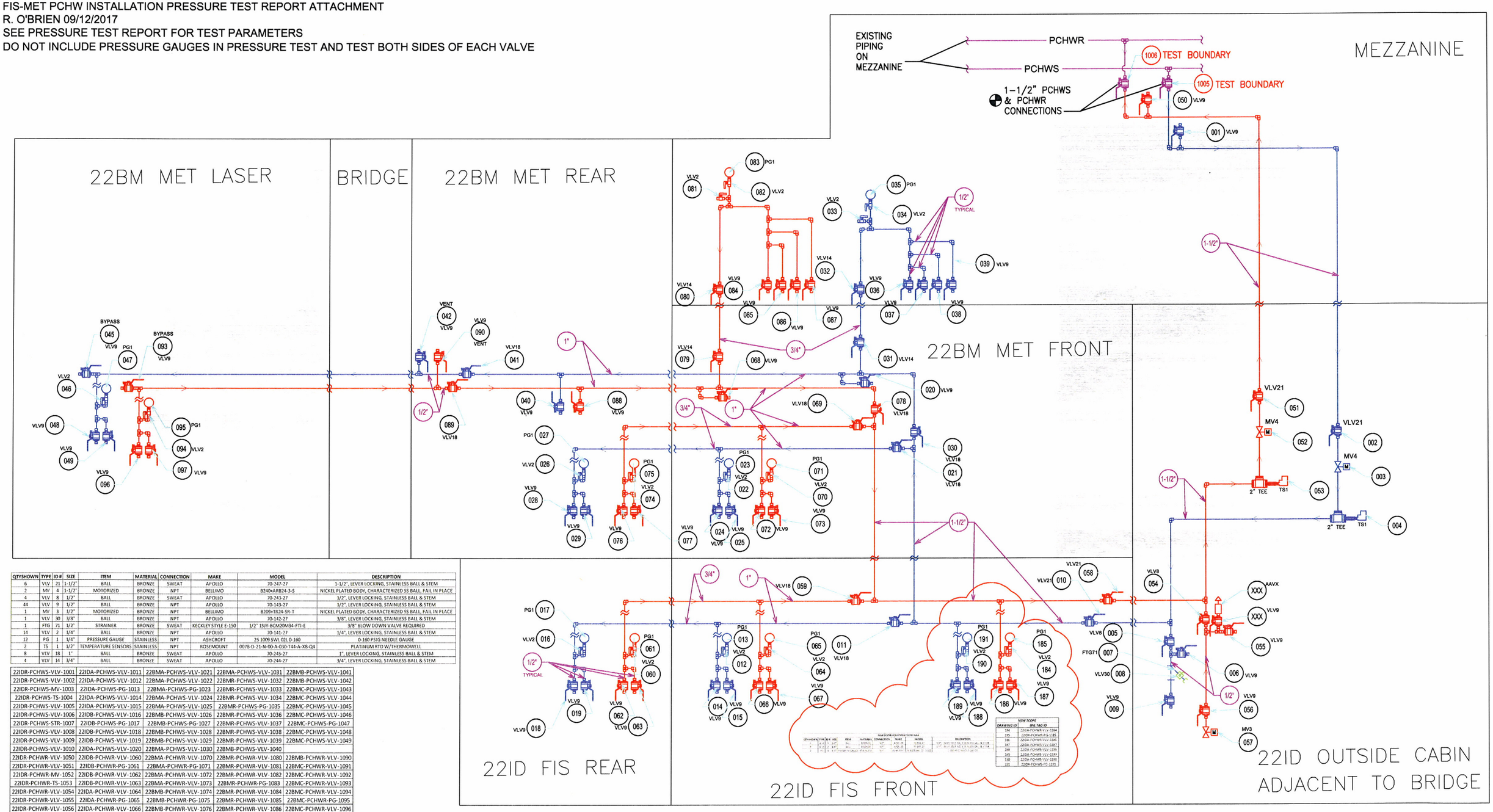

QTYSHOWN	TYPE	ID #	SIZE	ITEM	MATERIAL	CONNECTION	MAKE	MODEL	DESCRIPTION
6	VLV	21	1-1/2"	BALL	BRONZE	SWEAT	APOLLO	70-247-27	1-1/2", LEVER LOCKING, STAINLESS BALL & STEM
2	MV	4	1-1/2"	MOTORIZED	BRONZE	NPT	BELLIMO	B240+ARB24-3-S	NICKEL PLATED BODY, CHARACTERIZED SS BALL, FAIL IN PLACE
4	VLV	8	1/2"	BALL	BRONZE	SWEAT	APOLLO	70-243-27	1/2", LEVER LOCKING, STAINLESS BALL & STEM
44	VLV	9	1/2"	BALL	BRONZE	NPT	APOLLO	70-143-27	1/2", LEVER LOCKING, STAINLESS BALL & STEM
1	MV	3	1/2"	MOTORIZED	BRONZE	NPT	BELLIMO	B209+TR24-SR-T	NICKEL PLATED BODY, CHARACTERIZED SS BALL, FAIL IN PLACE
1	VLV	30	3/8"	BALL	BRONZE	NPT	APOLLO	70-142-27	3/8", LEVER LOCKING, STAINLESS BALL & STEM
1	FTG	71	1/2"	STRAINER	BRONZE	SWEAT	KECKLEY STYLE E-150	1/2" 15JY-BCM20M34-FTI-E	3/8" BLOW DOWN VALVE REQUIRED
14	VLV	2	1/4"	BALL	BRONZE	NPT	APOLLO	70-141-27	1/4", LEVER LOCKING, STAINLESS BALL & STEM
12	PG	1	1/4"	PRESSURE GAUGE	STAINLESS	NPT	ASHCROFT	25 1009 SWL 02L 0-160	0-160 PSIG NEEDLE GAUGE
2	TS	1	1/2"	TEMPERATURE SENSORS	STAINLESS	NPT	ROSEMOUNT	0078-D-21-N-00-A-030-T44-A-X8-Q4	PLATINUM RTD W/THERMOWELL
8	VLV	18	1"	BALL	BRONZE	SWEAT	APOLLO	70-245-27	1", LEVER LOCKING, STAINLESS BALL & STEM
4	VLV	14	3/4"	BALL	BRONZE	SWEAT	APOLLO	70-244-27	3/4", LEVER LOCKING, STAINLESS BALL & STEM

22IDR-PCHWS-VLV-1001	22IDA-PCHWS-VLV-1011	22BMA-PCHWS-VLV-1021	22BMA-PCHWS-VLV-1031	22BMB-PCHWS-VLV-1041
22IDR-PCHWS-VLV-1002	22IDA-PCHWS-VLV-1012	22BMA-PCHWS-VLV-1022	22BMR-PCHWS-VLV-1032	22BMB-PCHWS-VLV-1042
22IDR-PCHWS-MV-1003	22IDA-PCHWS-PG-1013	22BMA-PCHWS-PG-1023	22BMR-PCHWS-VLV-1033	22BMC-PCHWS-VLV-1043
22IDR-PCHWS-TS-1004	22IDA-PCHWS-VLV-1014	22BMA-PCHWS-VLV-1024	22BMR-PCHWS-VLV-1034	22BMC-PCHWS-VLV-1044
22IDR-PCHWS-VLV-1005	22IDA-PCHWS-VLV-1015	22BMA-PCHWS-VLV-1025	22BMR-PCHWS-PG-1035	22BMC-PCHWS-VLV-1045
22IDR-PCHWS-VLV-1006	22IDB-PCHWS-VLV-1016	22BMB-PCHWS-VLV-1026	22BMR-PCHWS-VLV-1036	22BMC-PCHWS-VLV-1046
22IDR-PCHWS-STR-1007	22IDB-PCHWS-PG-1017	22BMB-PCHWS-PG-1027	22BMR-PCHWS-VLV-1037	22BMC-PCHWS-PG-1047
22IDR-PCHWS-VLV-1008	22IDB-PCHWS-VLV-1018	22BMB-PCHWS-VLV-1028	22BMR-PCHWS-VLV-1038	22BMC-PCHWS-VLV-1048
22IDR-PCHWS-VLV-1009	22IDB-PCHWS-VLV-1019	22BMB-PCHWS-VLV-1029	22BMR-PCHWS-VLV-1039	22BMC-PCHWS-VLV-1049
22IDR-PCHWS-VLV-1010	22IDA-PCHWS-VLV-1020	22BMA-PCHWS-VLV-1030	22BMB-PCHWS-VLV-1040	
22IDR-PCHWR-VLV-1050	22IDB-PCHWR-VLV-1060	22BMA-PCHWR-VLV-1070	22BMR-PCHWR-VLV-1080	22BMB-PCHWR-VLV-1090
22IDR-PCHWR-VLV-1051	22IDB-PCHWR-PG-1061	22BMA-PCHWR-PG-1071	22BMR-PCHWR-VLV-1081	22BMC-PCHWR-VLV-1091
22IDR-PCHWR-MV-1052	22IDB-PCHWR-VLV-1062	22BMA-PCHWR-VLV-1072	22BMR-PCHWR-VLV-1082	22BMC-PCHWR-VLV-1092
22IDR-PCHWR-TS-1053	22IDB-PCHWR-VLV-1063	22BMA-PCHWR-VLV-1073	22BMR-PCHWR-PG-1083	22BMC-PCHWR-VLV-1093
22IDR-PCHWR-VLV-1054	22IDA-PCHWR-VLV-1064	22BMB-PCHWR-VLV-1074	22BMR-PCHWR-VLV-1084	22BMC-PCHWR-VLV-1094
22IDR-PCHWR-VLV-1055	22IDA-PCHWR-PG-1065	22BMB-PCHWR-PG-1075	22BMR-PCHWR-VLV-1085	22BMC-PCHWR-PG-1095
22IDR-PCHWR-VLV-1056	22IDA-PCHWR-VLV-1066	22BMB-PCHWR-VLV-1076	22BMR-PCHWR-VLV-1086	22BMC-PCHWR-VLV-1096
22IDR-PCHWR-MV-1057	22IDA-PCHWR-VLV-1067	22BMB-PCHWR-VLV-1077	22BMR-PCHWR-VLV-1087	22BMC-PCHWR-VLV-1097
22IDR-PCHWR-VLV-1058	22IDA-PCHWR-VLV-1068	22BMA-PCHWR-VLV-1078	22BMB-PCHWR-VLV-1088	
22IDA-PCHWR-VLV-1059	22BMA-PCHWR-VLV-1069	22BMA-PCHWR-VLV-1079	22BMB-PCHWR-VLV-1089	