22-IR UHV Optical Extraction from the 23-BM-B Large Gap Dipole

COMMISSIONING PLAN

October 11, 2018

NSLSII-22IR-PLN-002

REV 1

22-IR UHV Optical Extraction from the 23-BM-B Large Gap Dipole

COMMISSIONING PLAN

October 11, 2018

PREPARED BY:

10/12/2018

X

G. Lawrence Carr
FIS/MET Lead Beamline Scientist
Signed by: Carr, Larry

10/12/2018

X Guimei Wang

Guimei Wang
Accelerator Coordination Group Leader
Signed by: Wang, Guimei

Recoverable Signature

X

Charles Hetzel
Vacuum Group Leader
Signed by: chetzel

10/12/2018

X

Robert Lee
ESH Manager
Signed by: Lee, Robert J

APPROVED BY:

10/12/2018

X Timur Shaftan

Timur Shaftan
Accelerator Division Director
Signed by: Shaftan, Timur

REVISION HISTORY

REVISION	DESCRIPTION	DATE
1	First Issue	11OCT2018

Acronyms

BNL	Brookhaven National Laboratory
CVD	Chemical Vapor Deposition
DS	Downstream
DVC	Dipole Vacuum Chamber
EPS	Equipment Protection System
FEA	Finite Element Analysis
FIS	Frontier Synchrotron Infrared Spectroscopy
GV	Gate Valve
IR	Infrared
M	Mirror
MET	Magento, Ellipsometric & Time-resolved Optical Spectroscopy
NSLS-II	National Synchrotron Light Source-II
UHV	Ultra-High Vacuum
US	Upstream
VFM	Vertically Focusing Mirror

Table of Contents

1. OVERVIEW 1
2. CONSIDERATIONS FOR SAFETY AND EQUIPMENT PROTECTION 3
3. DETAILED COMMISSIONING FOR M1 4
3.1 General Process 4
3.1.1 Layout 4
3.1.2 Synchrotron Radiation Heat Sources 5
3.1.3 Positioning of M1 5
4. STEP-BY-STEP M1 COMMISSIONING 9
4.1 M1 Insertion, Conditioning and Coarse Electron Beam Orbit Positioning 9
4.2 Effect on beam of Inserting and Retracting M1 10
4.3 Beam to Exit Windows 10

1. OVERVIEW

This document presents the technical commissioning plan for the 22-IR UHV (Ultra High Vacuum) Optical Extraction from the 23-BM-B large gap dipole at the National Synchrotron Light Source II (NSLS-II) at Brookhaven National Laboratory (BNL).

The UHV Optical Extraction is a vacuum and optical system for collecting primarily dipole bending magnet radiation in the infrared spectral range. It consists of a modified dipole vacuum chamber for the NSLS-II storage ring (including a tapered section at the upstream end), a mirror for intercepting the infrared emitted by the dipole, and a sequence of other mirrors for transporting and re-imaging the source at an accessible location on the NSLS-II experimental floor.

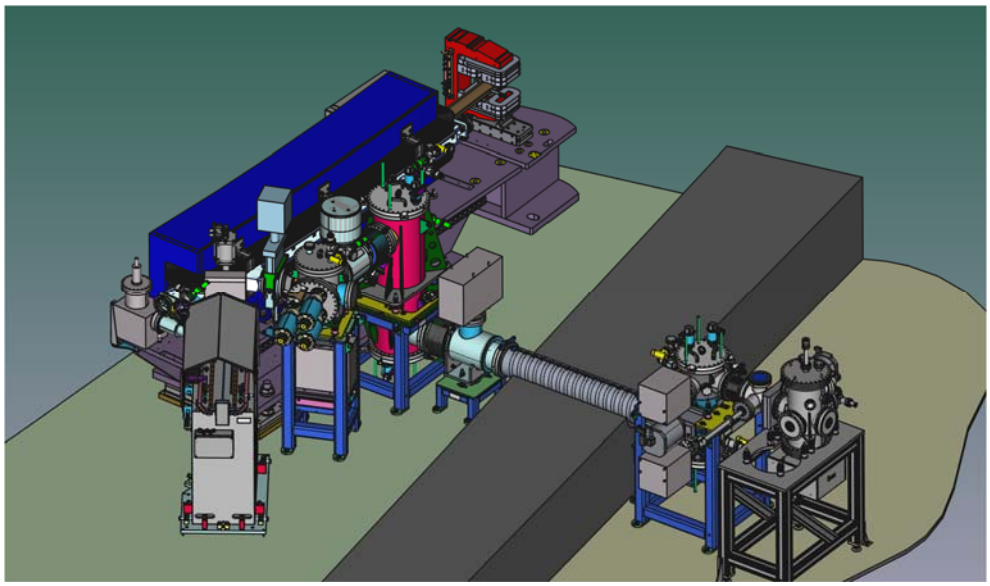

Figure 1-1: The full UHV Optical Extraction System, including dipole bend magnet (blue) and upstream corrector magnet (red). The tunnel wall is shown horizontally cut-away at the level where the IR beampipe passes through.

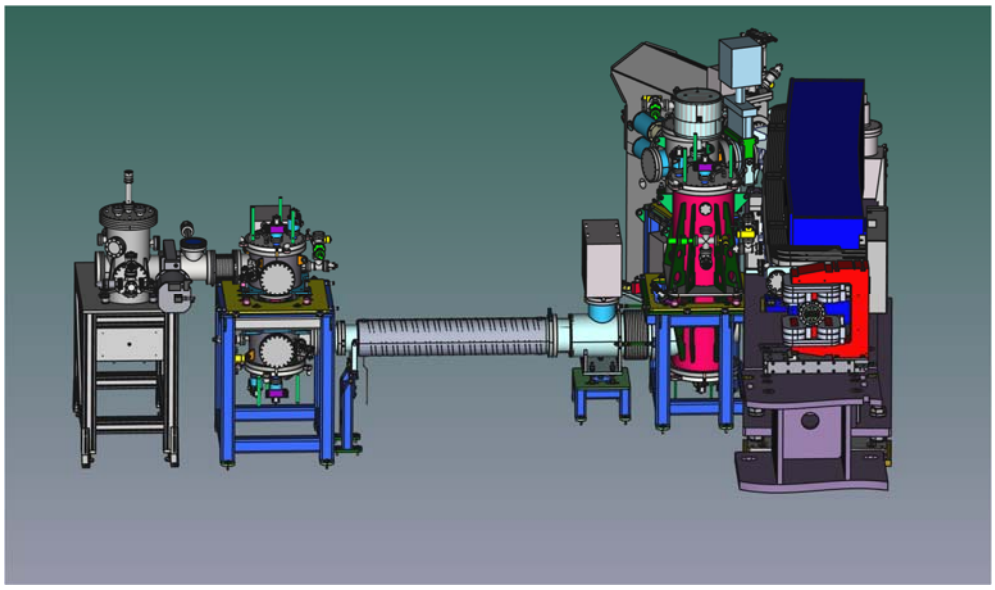

Figure 1-2: Same as above, but viewed from upstream and without the tunnel shield wall. Electron beam enters through flange at upstream corrector (red item right/front).

i. M1 Mirror System

The M1 mirror is made from solid copper with an aluminum layer to form the reflecting surface. It is mechanically fixed to a copper manipulator arm having provisions for modest water cooling.

The mirror has a wedge-shaped slot to allow the x-ray portion of the dipole bend radiation to pass through to absorbers. Those absorbers are already in-place and taking the swath of x-rays during operations. The rear surface of the M1 mirror has a set of 6 thermocouples for sending temperature information. Due to the slot, a significant fraction of visible and UV light is not collected, and the resulting visible image is no long symmetric with respect to the horizontal.

ii. M2 through M6 Mirror Systems

The mirrors in this sequence are all made from a thick glass/Zerodur ceramic substrate with a ~200 nm coating of aluminum. Angle of incidence in most cases is 45°. All x-rays and the majority of VUV photons are not reflected through this system of mirrors. Note that none of these spectral ranges should even be incident on M1. There is no potential heat load on any of these optics.

All of the mirrors are plane with the exception of M4, which is toroidal. The toroid has two equal conjugate focuses at 4000 mm from the mirror surface. M2 and M3 serve as a steering mirror pair to accurately place the beam on the toroid's axis. M5 and M6 serve as a steering mirror pair to have the beam be on the correct axis and centered on the UHV exit window.

Since the conjugate distances for M4 are equal, it produces a 1:1 image of the source at the exit window.

iii. Ultra-High Vacuum Components

The system is designed for NSLS-II storage ring vacuum requirements.

iv. Viewports and Cameras

Each mirror is housed in a vacuum tank that includes a viewport and camera. For M1, this camera can only view the mirror when it is fully retracted, i.e. not in position for beamline operations. It is used for inspection of the mirror surface itself. For the remaining UHV mirrors (M2 through M6), the camera is designed to view as much of the mirror surface as practical (as limited by the cylindrical geometry of the viewport itself). For these mirrors, the camera will view the visible and near-IR light footprint on the surface to assist in the optical alignment of the entire optical transport system.

v. Diamond Exit Window(s)

The beamline will be initially aligned using glass viewports for the exit windows. These will be replaced at a later date with CVD diamond having an average thickness of 375 microns. CVD diamond is absorbing for photon energies above 4.7 eV. This defines the upper limit for photon energies that can be delivered out to the experimental area when the beamline is fully operational. The glass viewports are opaque for wavelengths shorter than 350 nm and thus remove the UV portion of the source.

2. Considerations for Safety and Equipment Protection

i. Ionizing radiation

All ionizing radiation is contained inside the storage ring tunnel and supplemental shielding around the tunnel wall penetration leading to the 22-IR beamline. General area surveys around the ratchet walls will be performed as M1 is inserted into its operating position.

ii. IR / Visible / UV

An analysis of the light hazard has been completed. With glass viewports in-place, the intensity is below the threshold limiting value. As an additional precaution, the direct beam will never be viewed directly or with a magnifying device. The light image will be viewed using cameras or indirectly on screens.

iii. Accelerator Vacuum

The EPS system monitors vacuum conditions and controls a fast shutter (FS) plus GV1 and GV2 to have them closed and prevent opening if vacuum does not fulfill operational conditions.

A vacuum problem in M1 will cause M1 to retract and GV0 to close when M1 has reached the cleared position.

iv. Eliminating x-ray heat load on M1 Mirror

The angle-of-incidence onto M1 is about 35° such that x-rays are overwhelmingly absorbed rather than reflected. The electron beam is expected to be centered vertically as it enters and passes through the dipole vacuum chamber such that the entire flux of x-rays will pass through the M1 slot when it is inserted to its operating position. Since the actual electron beam height is not known to sufficient accuracy, the electron orbit trajectory may need to be adjusted to ensure the x-rays pass through the slot. The heat load from the x-rays would be about 1.1 kW if the full horizontal swath of 48 mrad is absorbed.

v. Heat effects on M1 for some x-ray absorption scenarios

A separate report will be provided with an FEA thermal analysis of the swath of x-rays being absorbed in M1. It is plausible that the mirror can be sufficiently retracted before exceeding any thermal limits. Additional studies on the rate that M1 can be retracted are planned for the next Maintenance period.

3. DETAILED COMMISSIONING FOR M1

3.1 General Process

3.1.1 Layout

The diagrams below show the physical exposure of the M1 mirror as a function of its inserted distance into the dipole vacuum chamber. The distances are indicated in millimeters (mm), with zero corresponding the mirror position when fully retracted. The total travel distance from fully extracted to fully inserted is about 560 mm. At a speed of 10 mm/sec, the mirror requires 56 seconds to move over the full range.

The left-hand set of diagrams provide a top view of the end of the new dipole vacuum chamber (DVC) where the mirror is to be inserted. The mirror enters horizontally from the left. The view has the electron beam orbit sketched in bright green. The downstream (DS) absorber is the brown object near the upper left corner. It has an 18 mm square aperture that would allow x-rays to continue down to a future beampipe position. The end of that pipe has another water-cooled absorber.

The right-hand set of diagrams are a view looking directly into the entrance of the DVC with the “zero degree” orbit direction normal to the diagram (i.e., this is the view an electron would have as it entered the chamber). The DVC flanges have been removed so that only the DVC interior cross section is visible. The electron beam should be centered on the square aperture of DS

absorber. Also visible is the stick absorber that is located part way into the DVC. That absorber is about 9 mm in diameter.

3.1.2 Synchrotron Radiation Heat Sources

There are two synchrotron radiation x-ray sources to be considered for their heat load. One is the tail end of the dipole 23-BM-A (large gap dipole upstream of FIS/MET). The other source is the first half of 23-BM-B (the intended IR source for the beamline). Their approximate footprint is shown as dark pink outlines on the right-hand set of diagrams. These assume that the majority of the x-ray flux is within about $2/\gamma$ vertical angle as measured from the horizontal plane. For NSLS_II at 3 GeV, γ is 5871 and $2/\gamma$ is 0.34 milliradians (mrad). The distance from the start of the DS dipole (23-BM-B) to M1 is about 2 meters, so the vertical beam height is 0.7 mm. For the much greater 9 meter distance (to the end of the upstream dipole), the vertical height is just over 3 mm. So, the upstream dipole fan that is to the left of zero degrees is significantly larger (and therefore the flux density is less). The fan of the US dipole ends at the zero-degree location (center of absorber square aperture) and the DS dipole fan begins there and continues off to the right.

Depending on the actual position of the electron beam (especially the trajectory away from horizontal), these dipole x-ray fans can be higher or lower than shown. As a result, as M1 is inserted, it may encounter one of these fans with the appearance of additional mirror heating. The insert distances indicated below are chosen to correspond with the point the near edge of the mirror could encounter one of these fans.

3.1.3 Positioning of M1

As noted above, the full range of M1 travel is about 560 mm. Of this travel distance, none of the mirror will have entered into the DVC until the half-way point of 280 mm is reached. Even here, the mirror is only visible when viewed at a skew angle, so unlikely to experience any x-ray flux.

From 290 mm until 340 mm the mirror can intercept x-rays from the US dipole fan, but only if the orbit is several (~3 or more) millimeters above or below the nominal orbit plane. Any asymmetry of the M1 heating (TCs above the orbit plane as opposed to those below) should be noted.

As the 340 mm position is passed, the outer “forks” of the M1 mirror begin to emerge into the main chamber cross-section (they will already be visible to a “skewed” viewer, but it is expected that the beam direction from the US to the DS dipole is accurately parallel to the zero-degree axis such that skew rays are very unlikely. Any heating of M1 should be “vertically symmetric.” If not, the heating of M1 should increase as the mirror is inserted beyond the 340 mm position. This would be a time to check the orbit through the 23-BM-A magnet and correct.

At the 400 mm position, the inner edge of the M1 slot begins to become exposed. Since the M1 slot starts at 6 mm height (contrast to the 9 mm height of the stick absorber, x-rays from the US dipole that were being shadowed by the stick could now become incident on M1. Any significant

increase in heating and heat asymmetry should be remedied by adjust the orbit through the US Dipole. In principle, the vast majority of the US dipole x-ray flux should be able to pass through the M1 slot at this location.

As the M1 mirror approaches its final operating location, additional flux from the US dipole is likely to be incident. This heating should be minimized by orbit adjustments.

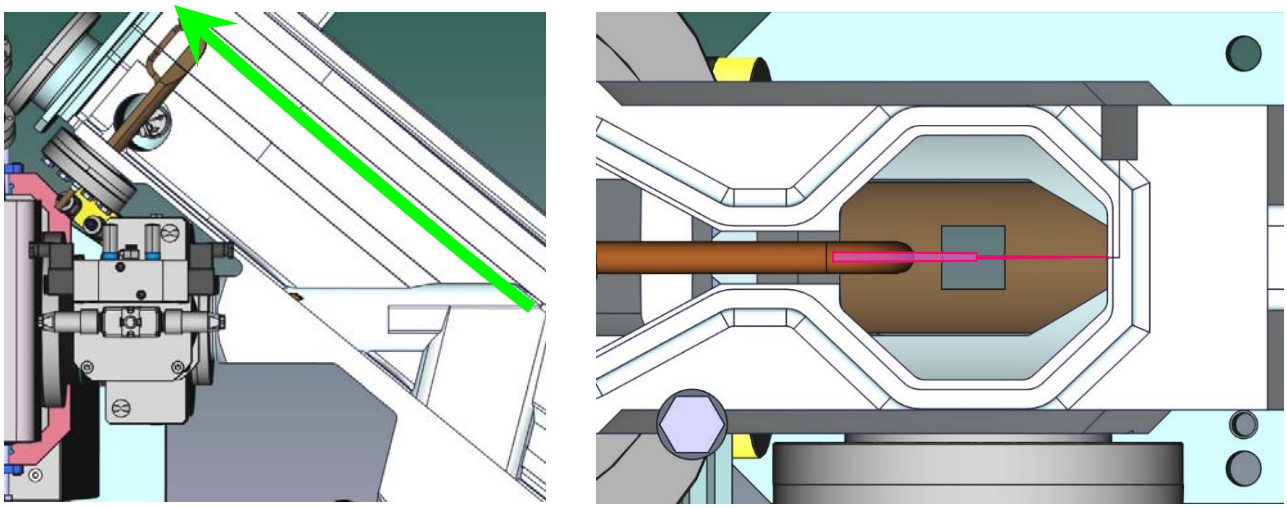

Inserted 290 mm

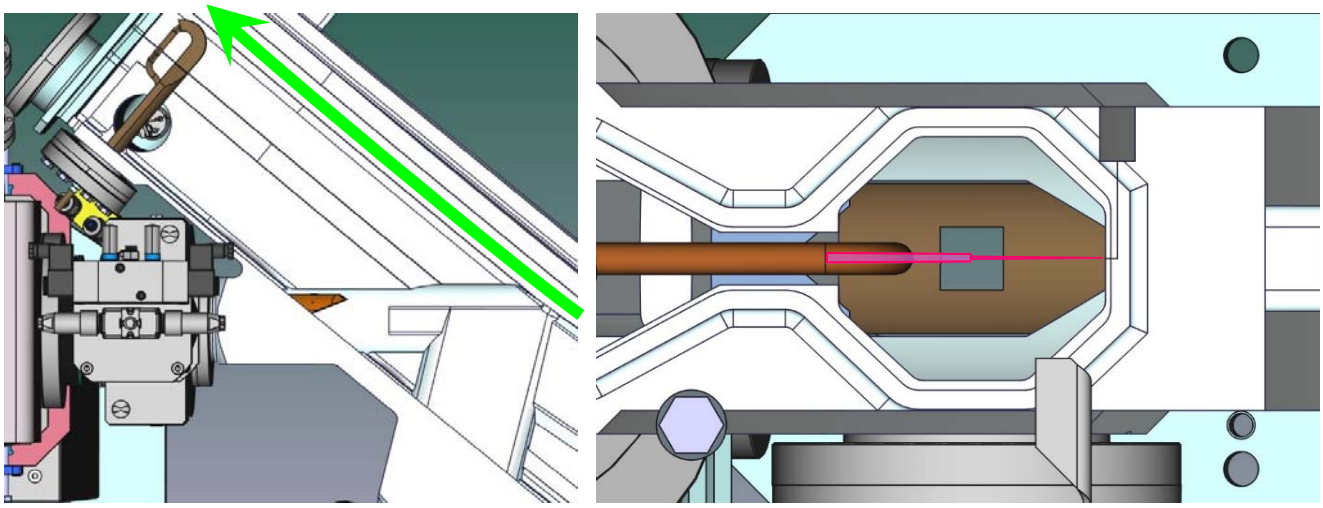

Inserted 345 mm

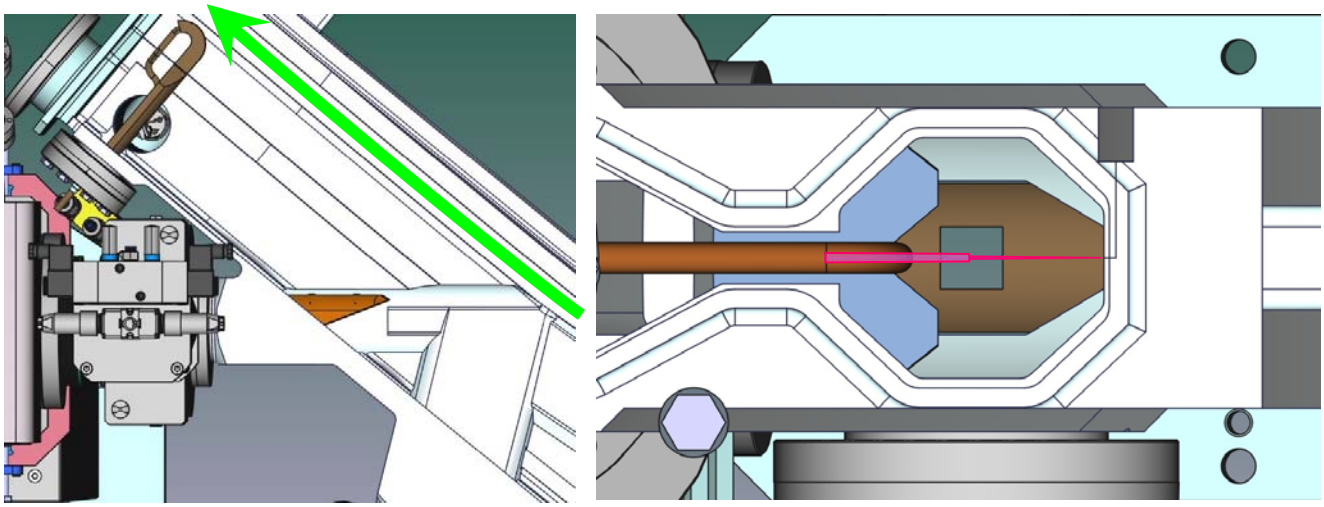

Inserted 400 mm

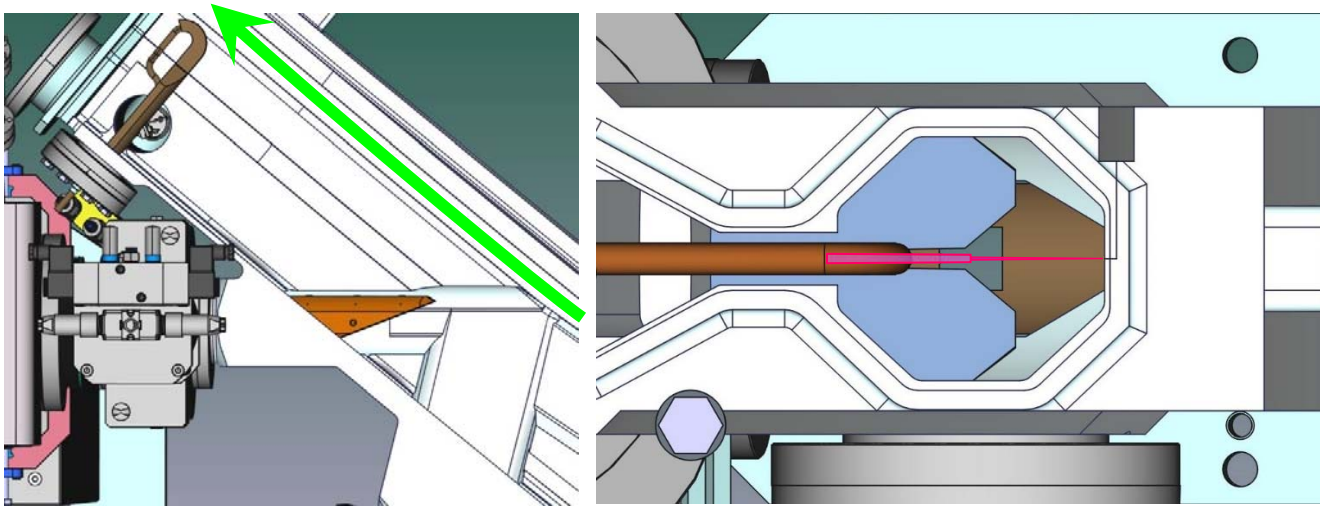

Inserted 440 mm

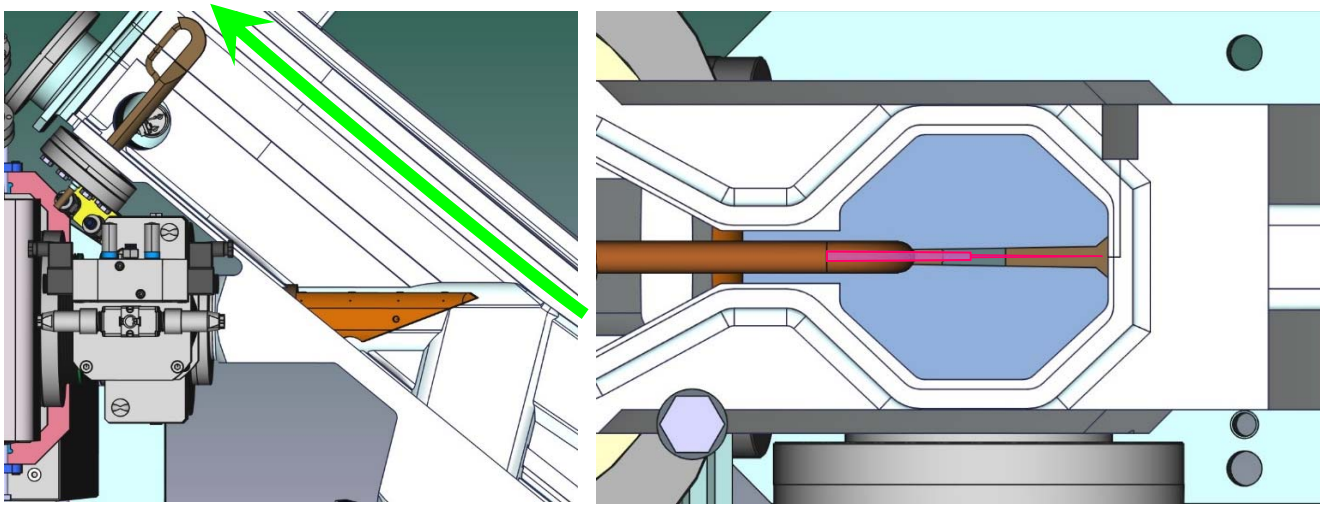

Inserted 500 mm

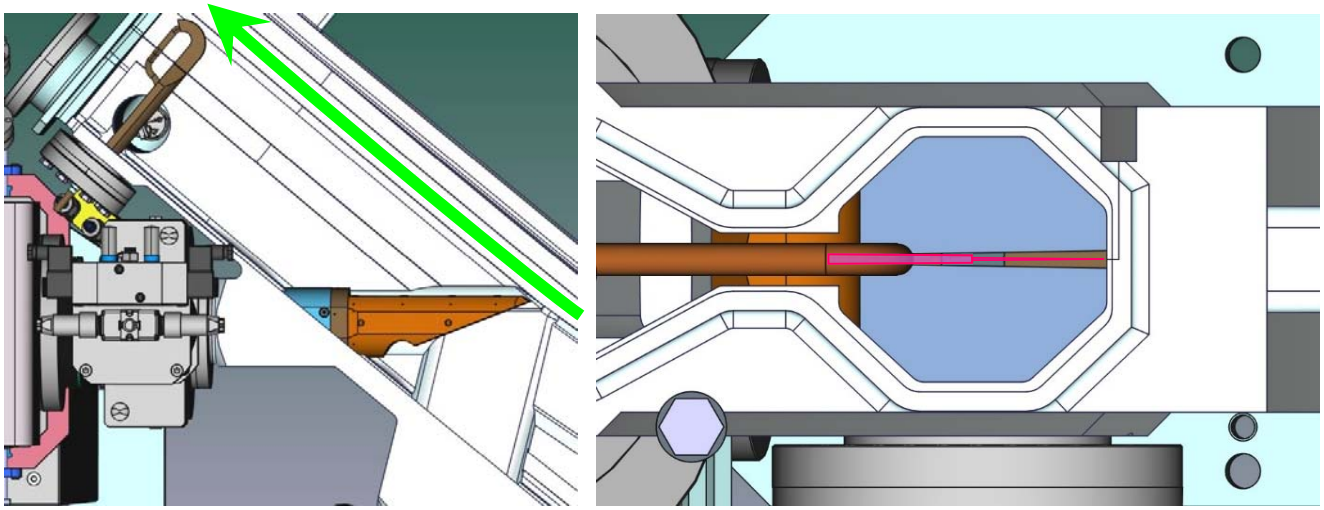

Inserted 560 mm (Fully In)

4. STEP-BY-STEP M1 COMMISSIONING

4.1 M1 Insertion, Conditioning and Coarse Electron Beam Orbit Positioning

Issues:

- Heating of M1 due to mis-alignment of electron beam orbit
- Conditioning / outgassing of M1

Approach / Mitigation:

- Continuous monitoring of the 6 thermocouples and the M1 and dipole vacuum chamber pressure. If any TC registers above 50°C at any time, pause process and analyze situation.

4.1.1 Begin with GV1, GV2 and GV3 closed.

4.1.2 Begin with zero current in storage ring.

4.1.3 Turn on M1 water flow to near maximum rate (vibrational noise is not an issue at this point).

4.1.4 Open GV0 to enable movement of M1. Assuming 0 mm position is the fully retracted position, insert from 0mm to 280mm (mirror still not exposed).

4.1.5 Inject 10 ma current.

4.1.6 Move M1 to 345mm (mirror possibly exposed to x-rays leaking around US stick absorber). Rate 1 mm/sec. Confirm negligible changes to TCs and vacuum in DVC. If asymmetric T rise, adjust orbit through upstream dipole.

4.1.7 Continue insertion from 345 mm to 400mm (outer “forks” of mirror exposed, but still limited to US Dipole Radiation). Rate of 1mm/sec. Continue to monitor TCs and vacuum. If one TC shows a rise significantly above the others, stop motion and adjust vertical beam position in direction to alleviate.

4.1.8 Insert from 400mm to 560mm (end is fully exposed) at 0.25mm/s. At this point, the x-ray fan from the downstream (local) dipole bend can be incident on the mirror. Continue to monitor TCs and vacuum. Make note of the two outermost TCs as an indicator of beam impedance heating. If one TC shows a rise significantly above the others, stop motion and adjust vertical beam position in direction to alleviate. The adjustment should concern the vertical beam height in the 1st part of 23-BM-B (downstream dipole). This will take 600 seconds, or 10 minutes assuming no stops. Toward the end of the travel, the M1 slot may

experience some x-rays from the US dipole. Vertical adjustment of the electron beam orbit through the last portion of the dipole may also be required.

4.1.9 After full insertion, confirm temperatures and vacuum.

4.1.10 Once vacuum is fully recovered, open GV1 and view image on M2 from camera #2. Adjust orbit as needed to center the visible light across the M1 slot. Record accelerator parameters (magnet currents, BPMs). If insufficient light for camera to view, increase current in 10ma steps until image is apparent. Note this beam current value. Continue to monitor M1 TCs. Note the beam current needed to yield a good image.

4.1.11 After the verification of beam image on M2, close GV1 to protect vacuum and mirrors M2, M3, M4, etc.

4.1.12 Gradually increase beam current to 170 mA in 25 mA steps to condition mirror while monitoring TCs and vacuum. Perform phase I and II radiation survey (following the procedure of PS-C-ESH-PRC-061, *NSLS-II Insertion Devices and Front Ends Radiation Survey Plan*) of the cell 23 experimental floor area.

4.1.13 Perform local bumps in orbit to best understand what affects the beam alignment onto M1. Update records of accelerator magnet current and BPM values.

4.1.14 After the ESH Manager gives AD Staff permission to proceed with commissioning, increase beam current in 25ma steps until 400ma is reached. Continue to monitor TCs and vacuum. If one TC shows a rise significantly above the others, stop injection and adjust vertical beam position in direction to alleviate.

4.2 Effect on beam of Inserting and Retracting M1

With the electron beam orbit at the correct height and angle, perform tests to see what effect the movement of M1 has on a stable orbit.

Note: Radiological surveys should continue during these 4.2 steps.

4.2.1 Insert M1 from the fully retracted position with 400mA stored.

4.2.2 Insert M1 from the “safe” positions 345mm and 400mm with 400mA stored

4.2.3 Retract M1 with 400mA stored

4.2.4 Starting from zero current with M1 inserted, fill ring to 400ma while observing beam stability, pressure and temperature (determine time constant for SS). If this is a problem, try filling with the mirror retracted to 345mm and 400mm positions.

Once 4.2 is complete, the radiological surveys can be concluded (until beam current in NSLS-II is increased toward 500ma).

4.3 Beam to Exit Windows

4.3.1 Begin with M1 fully inserted to operating position.

4.3.2 Inject to current needed to view beam footprint on cameras (see 4.1.11).

Note: Though there is no light hazard after the light has passed through a glass viewport. In general, the visible beam will never be directly viewed – only its projected image on a screen.

4.3.3 Confirm that the visible light beam will be properly contained by glass viewports.

4.3.4 Confirm vacuum downstream of GV1, Open GV1: Confirm vacuum downstream of GV2, Open GV2. At this point visible light is likely to be reaching to GV3 (assumed still closed).

4.3.5 Set M2 position to its default position for SR bend radiation.

4.3.6 Camera 2 through 6 will be used to view visible illumination on each mirror. The expected visible light footprints for each mirror are shown in the table/figures below.

Camera 2: Confirm vertical symmetry of visible beam footprint. If the illumination is not symmetric, adjust electron beam height to restore symmetry.

Camera 3: View footprint of beam on M3, adjust M2 angular orientation to achieve positioning as given in figure.

Camera 4: View footprint of beam on M4, adjust M3 angular orientation to achieve positioning as given in figure.

Camera 5: View footprint of beam on M5, adjust M4 angular orientation to achieve positioning as given in figure. Note that the camera for M5 provides an angled (off-axis) view of the mirror surface.

Camera 6: View footprint of beam on M6, adjust M5 angular orientation to achieve positioning as given in figure.

Camera 7: There is a small chamber between GV2 and GV3 that has a magnetic transporter for inserting an aluminum “paddle” with a polished surface. With the

visible light diffuser installed, insert the paddle and rotate to check for an image of the visible light on the diffuser. The image should be a symmetric and slightly curved “Vee” shape. The figure below shows the expected (ideal) shape as well as other shapes that correspond to the electron beam height error as it approaches M1. When this step is completed, retract the magnetic transporter until the visible light image on the diffuser has disappeared.

4.3.7 Confirm vacuum downstream of GV3, open GV3.

4.3.8 Retract the PVP to allow the visible light to reach the glass viewport serving as the UHV exit window for alignment. The light scattered from the glass surfaces should serve to allow M6 to be adjusted so that the visible light is properly positioned on the viewport.

4.3.9 Next, lower the 22-IR-2 Off-axis Paraboloidal Mirror M8-2 into its position. Visible light will now be reflected to the 22-IR-2 MET glass viewport exit window.

4.3.10 Use the Paddle Viewport so that camera 7 can view the visible light footprint on M8-2. Note centering. Also observe footprint on the MET glass viewport as an indication of M8-2 alignment.

4.3.11 Increase beam current to 400ma and confirm camera images show same geometry as at low current.

This completes the 22-IR UHV Optical Extraction Commissioning.

The images below give information on the visible light footprint expected for each mirror surface. These will be compared with camera images to correctly position the visible light beam and the mirror alignments.

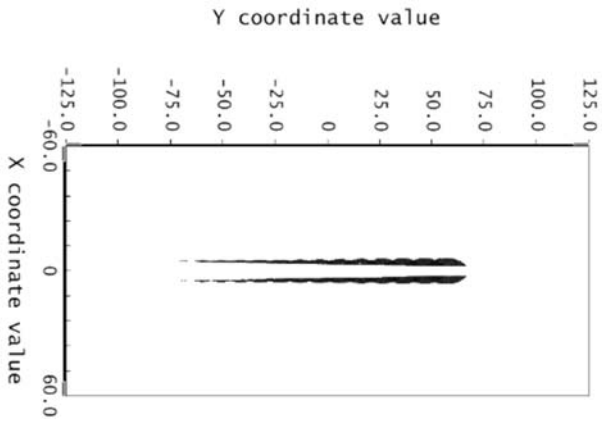

M2 from Camera #2

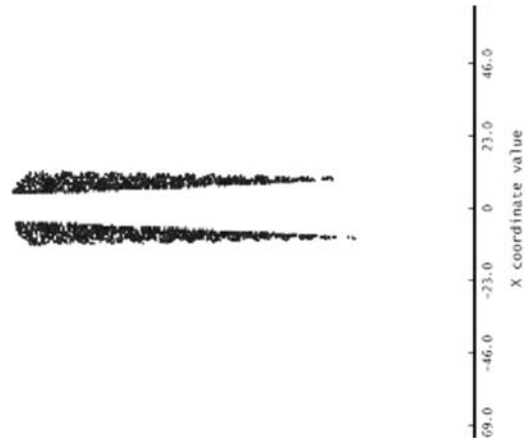

M3 from Camera #3

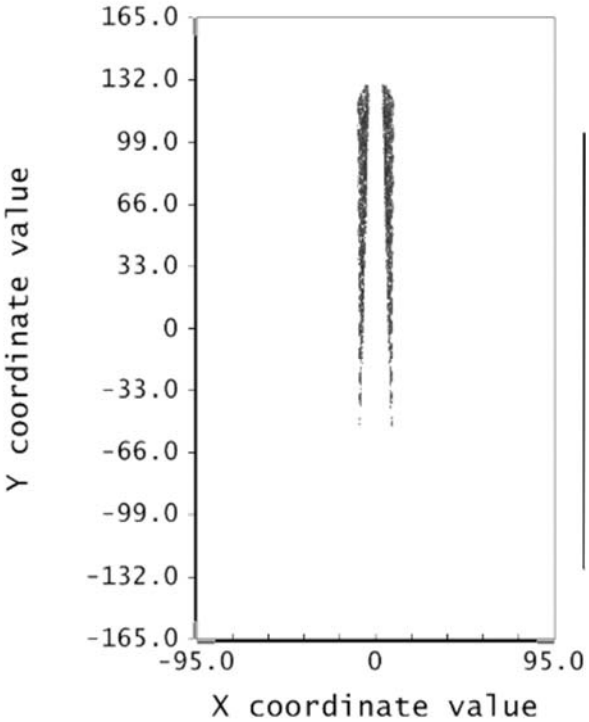

M4 from Camera #4

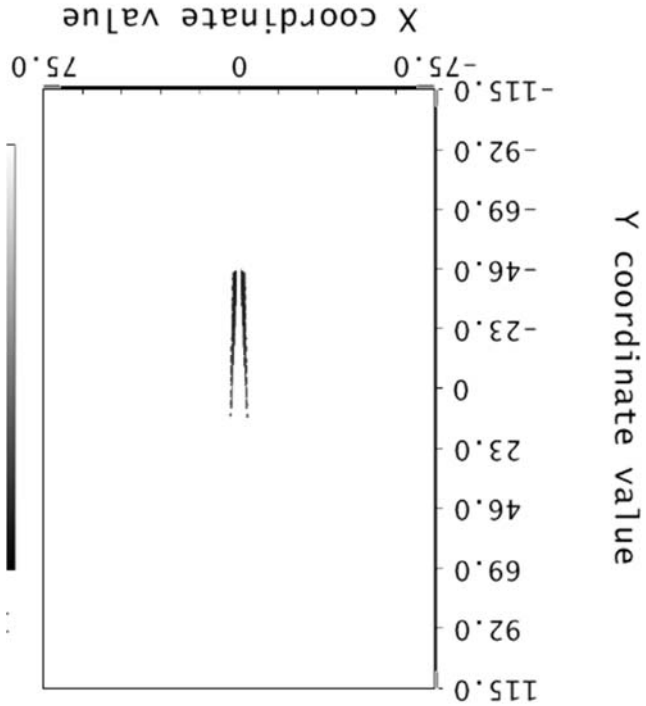

M5 from Camera #5 (does not include skew angle of camera)

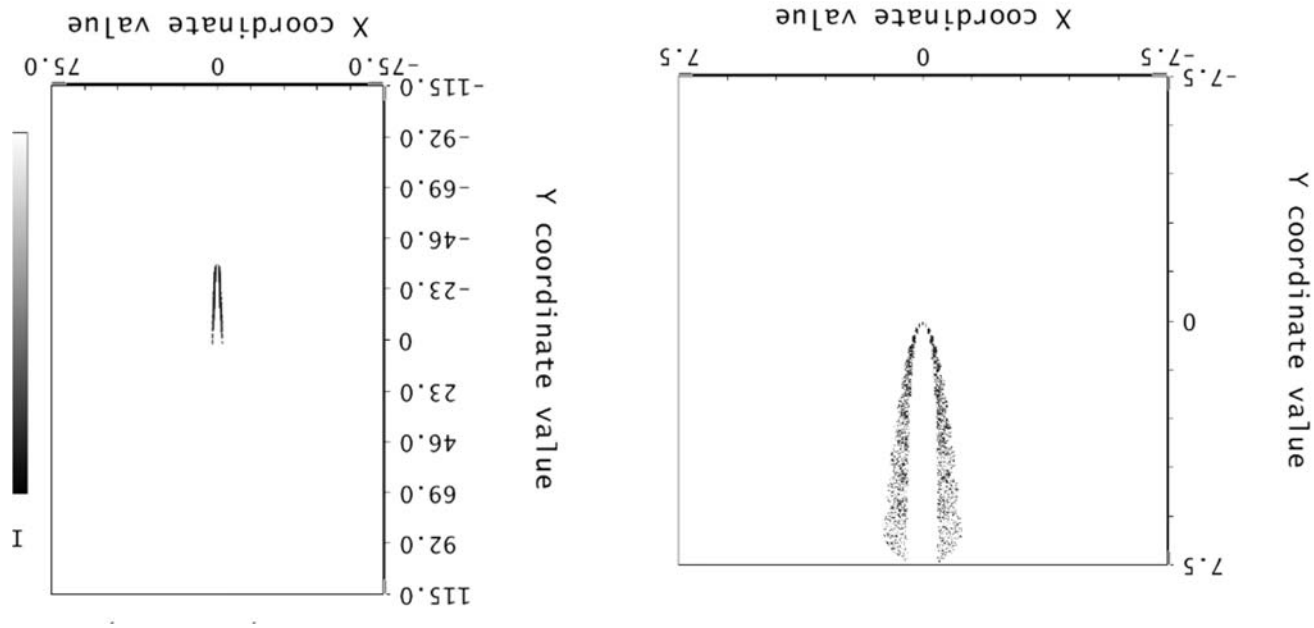

M6 from Camera #6 (does not include skew angle of camera)