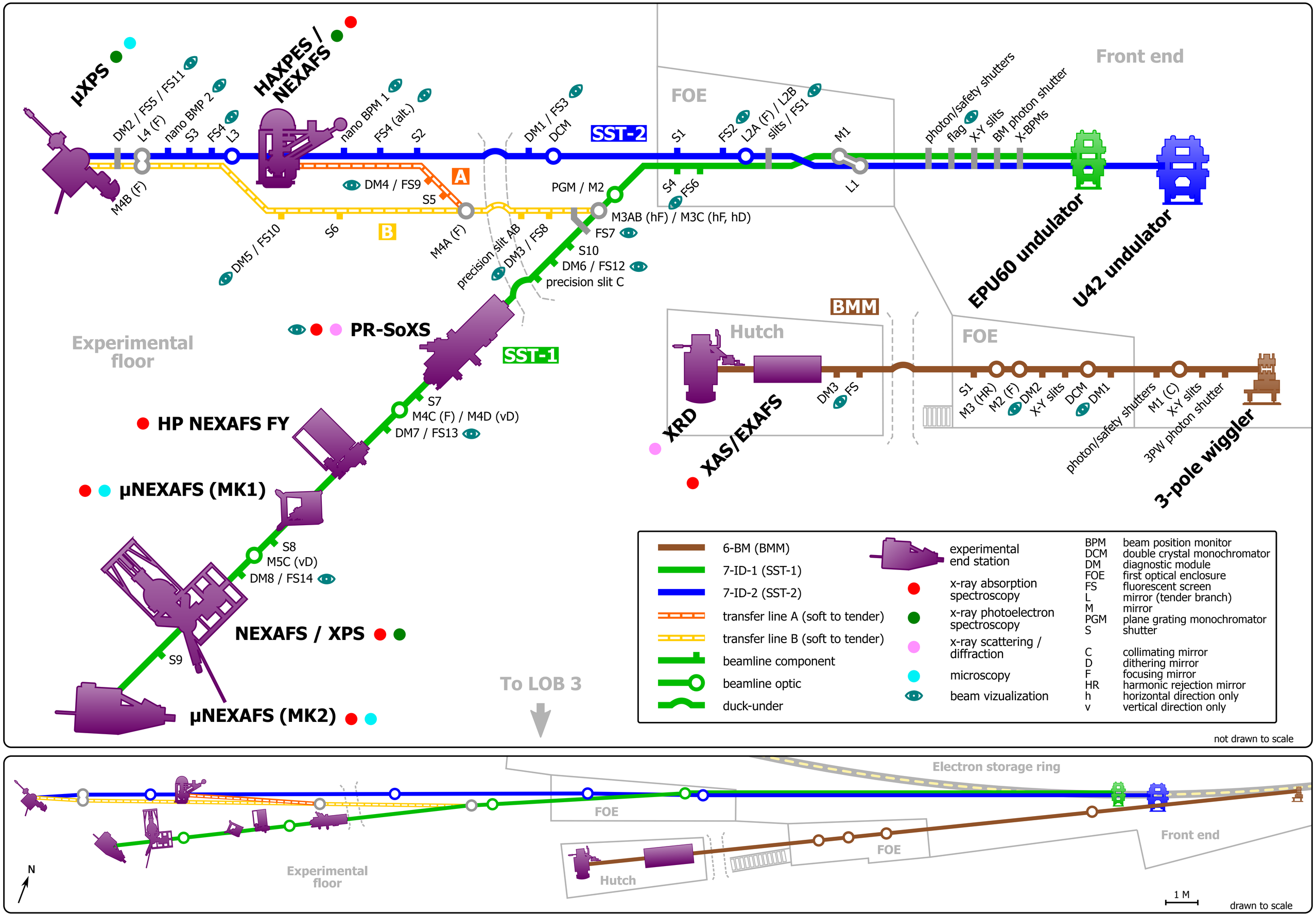
μXPS
DM2 / FS5 / FS11
L4 (F)
nano BMP 2
S3
FS4
L3
HAXPES / NEXAFS
nano BPM 1
FS4 (alt.)
S2
DM1 / FS3
DCM
SST-2
FOE
S1
FS2
L2A (F) / L2B
slits / FS1
M1
photon/safety shutters
flag
X-Y slits
BM photon shutter
X-BPMs
Front end
M4B (F)
DM4 / FS9
A
S5
PGM / M2
S4
FS6
L1
M3AB (hF) / M3C (hF, hD)
DM5 / FS10
S6
B
M4A (F)
precision slit AB
DM3 / FS8
FS7
S10
DM6 / FS12
precision slit C
EPU60 undulator
U42 undulator
BMM
Hutch
FOE
Experimental floor
PR-SoXS
SST-1
DM3
FS
S1
M3 (HR)
M2 (F)
DM2
X-Y slits
DCM
DM1
photon/safety shutters
M1 (C)
X-Y slits
3PW photon shutter
S7
M4C (F) / M4D (vD)
DM7 / FS13
HP NEXAFS FY
XRD
XAS/EXAFS
3-pole wiggler
μNEXAFS (MK1)
S8
M5C (vD)
DM8 / FS14
NEXAFS / XPS
S9
μNEXAFS (MK2)
To LOB 3
6-BM (BMM)
7-ID-1 (SST-1)
7-ID-2 (SST-2)
transfer line A (soft to tender)
transfer line B (soft to tender)
beamline component
beamline optic
duck-under
experimental end station
x-ray absorption spectroscopy
x-ray photoelectron spectroscopy
x-ray scattering / diffraction
microscopy
beam vizualization
BPM beam position monitor
DCM double crystal monochromator
DM diagnostic module
FOE first optical enclosure
FS fluorescent screen
L mirror (tender branch)
M mirror
PGM plane grating monochromator
S shutter
C collimating mirror
D dithering mirror
F focusing mirror
HR harmonic rejection mirror
h horizontal direction only
v vertical direction only
not drawn to scale
Electron storage ring
FOE
Front end
FOE
Hutch
Experimental floor
N
1 M
drawn to scale

REVISION HISTORY					
REV	DESCRIPTION	DATE	DESIGNER	CHECKED BY	ENGINEER
A	RELEASE PER ECO-005664	10/2018	J.FABIJANIC	R.GAMBELLA	S.O'HARA
B	REVISED PER ECO-005694	11/2018	J.FABIJANIC	C. STELMACH	S.OHARA

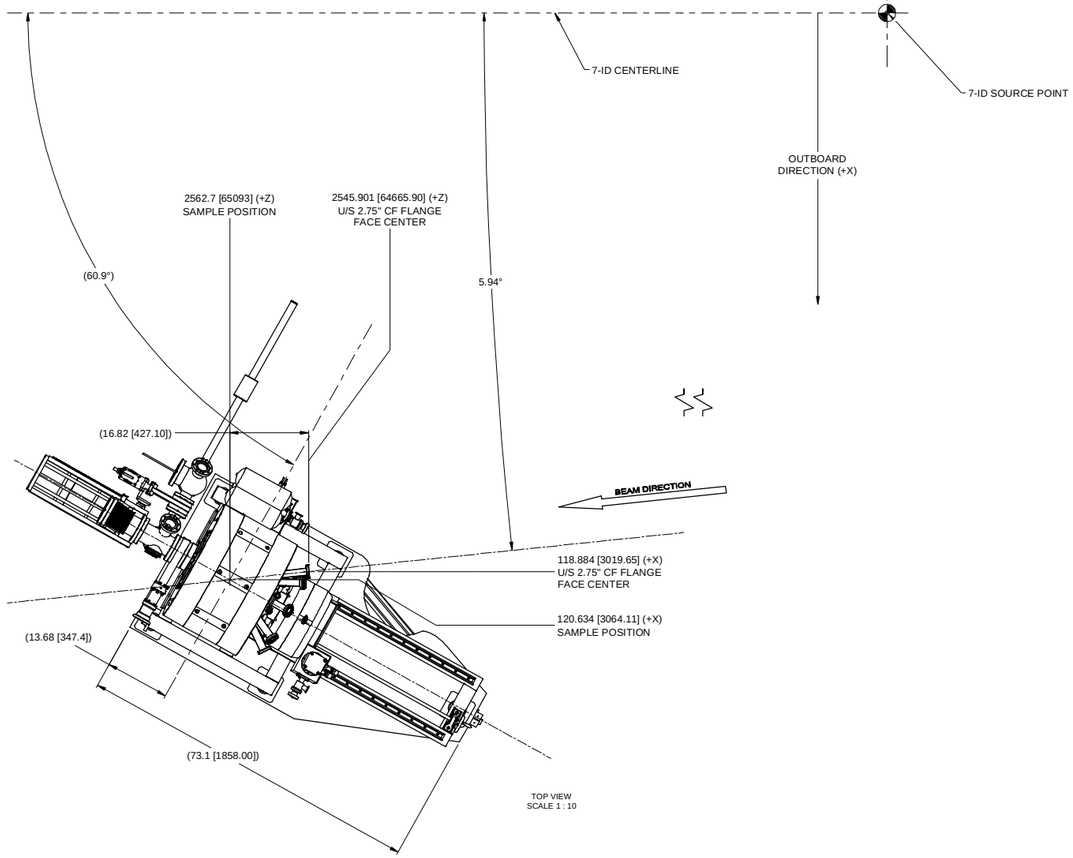

TOP VIEW
SCALE 1 : 10

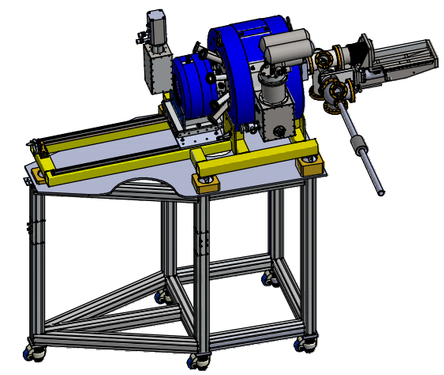

ISO VIEW
(LOOKING OUTBOARD)
SCALE 1 : 12

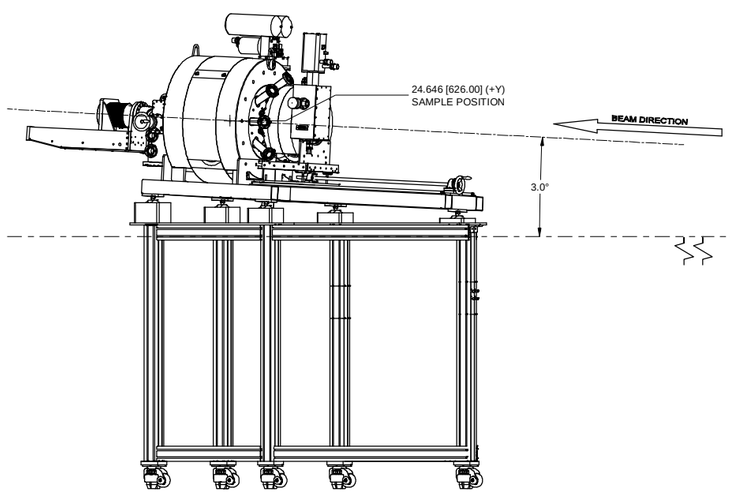

SIDE VIEW
(LOOKING INBOARD)
SCALE 1 : 10

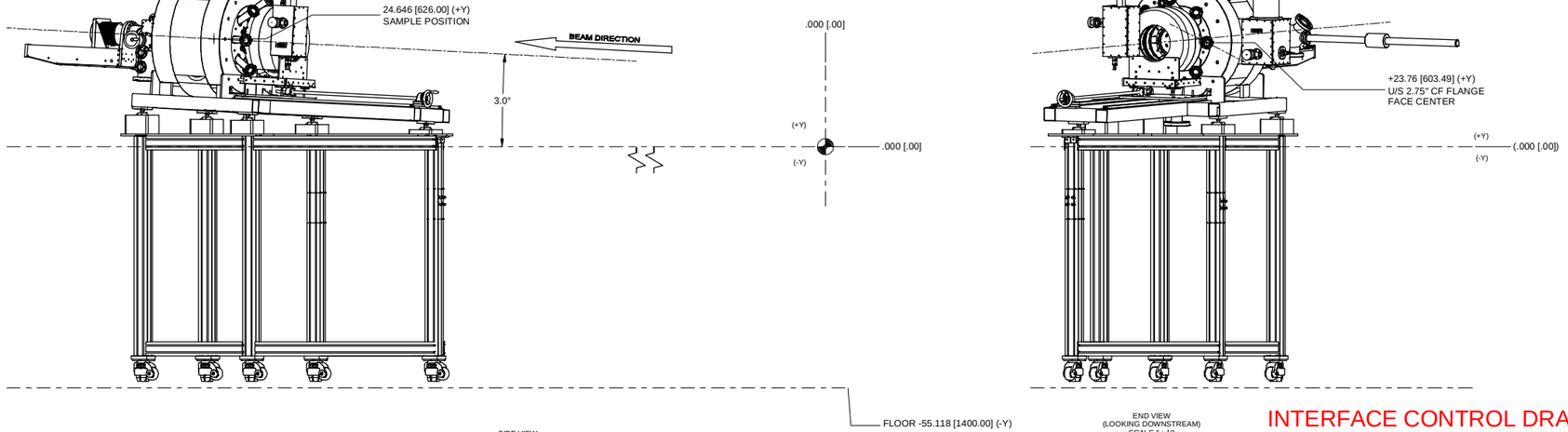

END VIEW
(LOOKING DOWNSTREAM)
SCALE 1 : 10

NOTES:

1. UNLESS OTHERWISE SPECIFIED, ALL DIMENSIONS ARE TAKEN FROM THE 7-ID CENTER OF STRAIGHT.
2. ALL DIMENSIONS TOLERANCES TO BE +/-10mm FROM SOURCE UNLESS OTHERWISE NOTED.
3. THE REQUIRED CHAMBER PRESSURES ARE 5X10-7 TORR FOR COMMISSIONING AND 3X10-7 TORR FOR OPERATIONS .
4. SEE DRAWING PD-SST-BL-LAY-1060 SURVEY AND ALIGNMENT DRAWING FOR CONFIGURATION CONTROL OF CHAMBER TO BE USED AS BEAM STOP.

INTERFACE CONTROL DRAWING

NEXT ASSY:	PD-SST-BL-3001	

UNLESS OTHERWISE SPECIFIED
ALL DIMENSIONS ARE IN INCHES
DIMENSIONS IN BRACKETS [ ] ARE GIVEN IN METRIC UNITS
FOR ILLUSTRATIVE AID AND FOR REFERENCE ONLY
PRODUCT DRAWING IS NO FOR SIZE THIS SHEET

DIMENSIONAL TOLERANCES: X ± 0.060, .X ± 0.030, .XX ± 0.015, .XXX ± 0.005
ANGULAR TOLERANCE: ± 5°
FINISH: 125
DEBURR, CLEAN & DRAW CORNERS 0.020 MIN. TO 0.250 MAX.
THIRD ANGLE PROJECTION

BROOKHAVEN NATIONAL LABORATORY
BROOKHAVEN NATIONAL LABORATORY
P.O. BOX 5000, UPTON, NEW YORK 11973
Exploring Life's Mysteries, Pursuing the Future

NSLS II NATIONAL SYNCHROTRON LIGHT SOURCE II

DRAWN BY	J.FABIJANIC	9/14/2018
CHECKED BY	R.GAMBELLA	10/2018
VACUUM ENGINEERING APPROVAL	S.OHARA	10/2018
MECHANICAL ENGINEERING APPROVAL	D.FISCHER	10/2018
ESH&Q APPROVAL	L.STEGLER	10/2018
QA APPROVAL	J.ZIPPER	10/2018

PHOTON DIVISION
SST BEAMLINE, END STATION
LARIAT II

E — SIZE
PD-SST-ES-3000 — DRAWING NUMBER
B — REVISION
SCALE: SEE DWG VIEW
WBS# 7.02.03
ESH&Q RISK LEVEL A2
SHEET 1 OF 1

© Mech-Ind-Sig:1TIPDS/STE/SPD-SST-ES-3000.dwg