Large Area Rapid Image Analysis Tool, MK-II (LARIAT-2)

IRR Functional Description

Contents

1 INTRODUCTION 3

Primary Research Capabilities 3

Beamline Staff 4

2 ENDSTATION DESIGN AND COMPONENTS 5

2.1 Location On Beamline 5

2.2 Endstation Components 5

3 ENDSTATION SAFETY 7

3.1 Radiation Shielding 7

3.2 Radiation Safety Components 7

3.2.4 Configuration control 7

3.3 Personnel Protection System (PPS) 7

3.4 Hazard Identification and Mitigation 7

4 INSTRUMENT READINESS 8

4.1 Survey and alignment 8

4.2 Utilities 8

4.3 Vacuum System and Pressure Safety 8

4.4 Controls 8

1 INTRODUCTION

Primary Research Capabilities

The National Institute of Standards and Technology (NIST) and the Department of Energy (DOE) have a 35 year ongoing partnership at the NSLS and NSLS-II developing advanced synchrotron measurement methods and delivering excellence in material science impacting important societal challenges in energy, health, environment, national security, and improving our quality of life. This partnership promotes innovation and enhances US industrial competiveness for inorganic and organic semiconductors, photovoltaics, self-assembled-monolayers, biological and environmental materials, batteries, catalysts, fuel cells, polymers, superconductors, ferroelectrics, and ferromagnets.

Currently NIST operates a suite of three beamlines at NSLS-II: the beamline for materials measurement (BMM) at 6-BM, and the spectroscopy soft and tender beamlines (SST-1 and SST-2) at 7-ID. The Large Area Rapid Image Analysis Tool, MKII (LARIAT-2) is a full-field partial electron yield spectromicroscope for near edge x-ray absorption spectroscopy imaging. LARIAT-2 was originally installed and operated at NSLS beamline U8B, and has been installed as the terminal endstation on SST-1. A photograph of the system is shown in Figure 1.

LARIAT-2 uses a magnetic projection lens system to provide full-field imaging over a 20 mm x 20 mm field of view, with a depth of field on the order of 10 mm. This large field of view and depth of field permit the imaging of large, curved surfaces without sectioning. Imaging resolutions of around 5 µm at the C *K*-edge have been achieved. Images are collected using a microchannel plate, phosphor screen, and CCD camera.

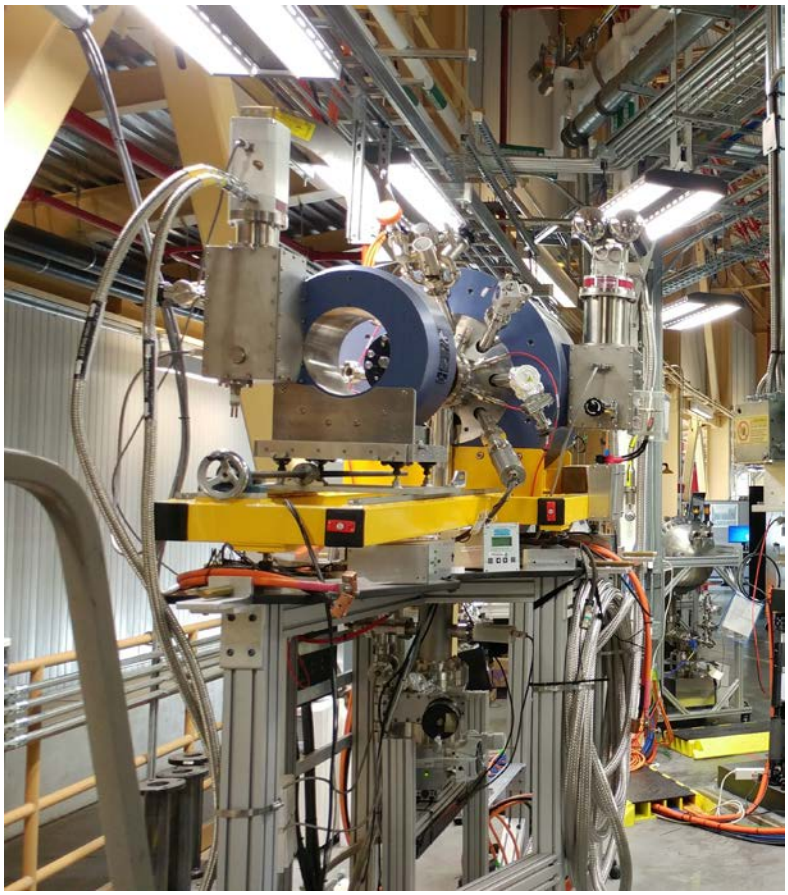

Figure 1: Photograph of the LARIAT-2 endstation prior to installation.

Beamline Staff

NIST Project Leader	Daniel Fischer
Lead Beamline Scientist, SST-1	Cherno Jaye
LARIAT-2 Lead Scientist	Conan Weiland

2 ENDSTATION DESIGN AND COMPONENTS

2.1 Location On Beamline

The LARIAT-II endstation is located as the last experimental station on SST-1, terminating the beamline. A layout diagram of the NIST beamline suite at NSLS-II is shown in Figure 1. A photon shutter which serves to isolate LARIAT-2 from the rest of the beamline is located between the NEXAFS and LARIAT-2 stations.

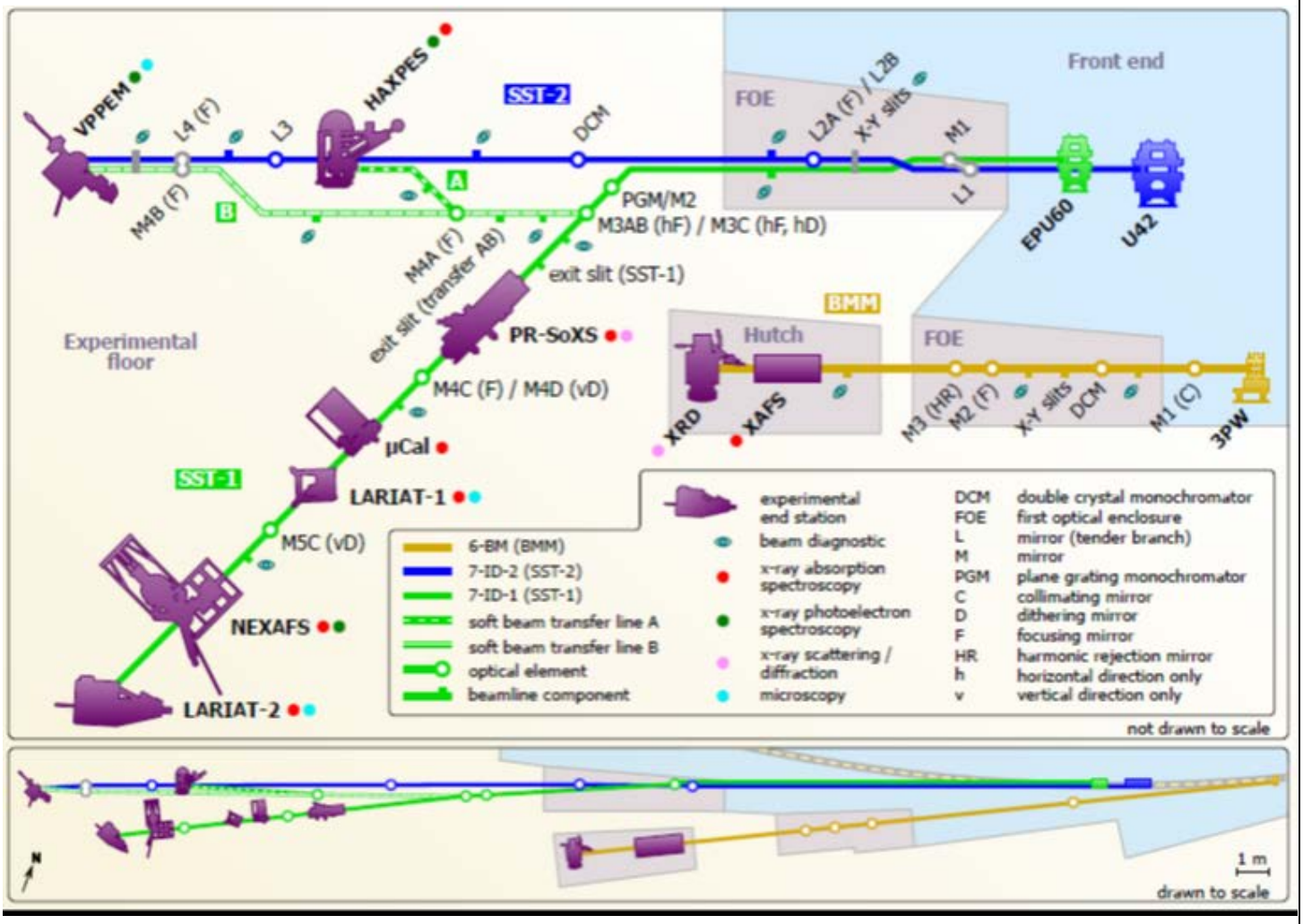

Figure 2: Subway-style layout of NIST beamline suite. LARIAT-2 is located at the end of the SST-1 beamline.

2.2 Endstation Components

The LARIAT-2 endstation consists of a stainless steel vacuum chamber which is located partially inside the bore of a 9 T high temperature superconducting magnet. The vacuum chamber consists of a primary cylinder which defines the instrument axis, and several ports radiating out from the central tube. There is an additional port oriented downwards for pumping. A microchannel plate, phosphor, and CCD camera make up the detector chain and are located at one end of the instrument axis. The sample manipulator is located at the opposite end. The x-ray beam enters the endstation through one of the ports and is oriented approximately 35 degrees with respect to the instrument axis. A cross-section of the vacuum chamber is shown in Figure 2. A small section of beam tube is also installed between the chamber and the upstream photon shutter.

Samples are inserted into the vacuum chamber via a load lock, which can be isolated from the main chamber using a gate valve. Two turbo pumps are used to keep vacuum in the chamber below 10^{-7} Torr; one pump is located on the main chamber and a second on the load lock.

LARIAT-2 uses two high temperature superconducting magnets as imaging lenses: a 9 T magnet which is mounted around the sample plane, and a 0.7 T magnet which is located at the detector plane.

A platform is located near the load lock to allow easy access for sample introduction.

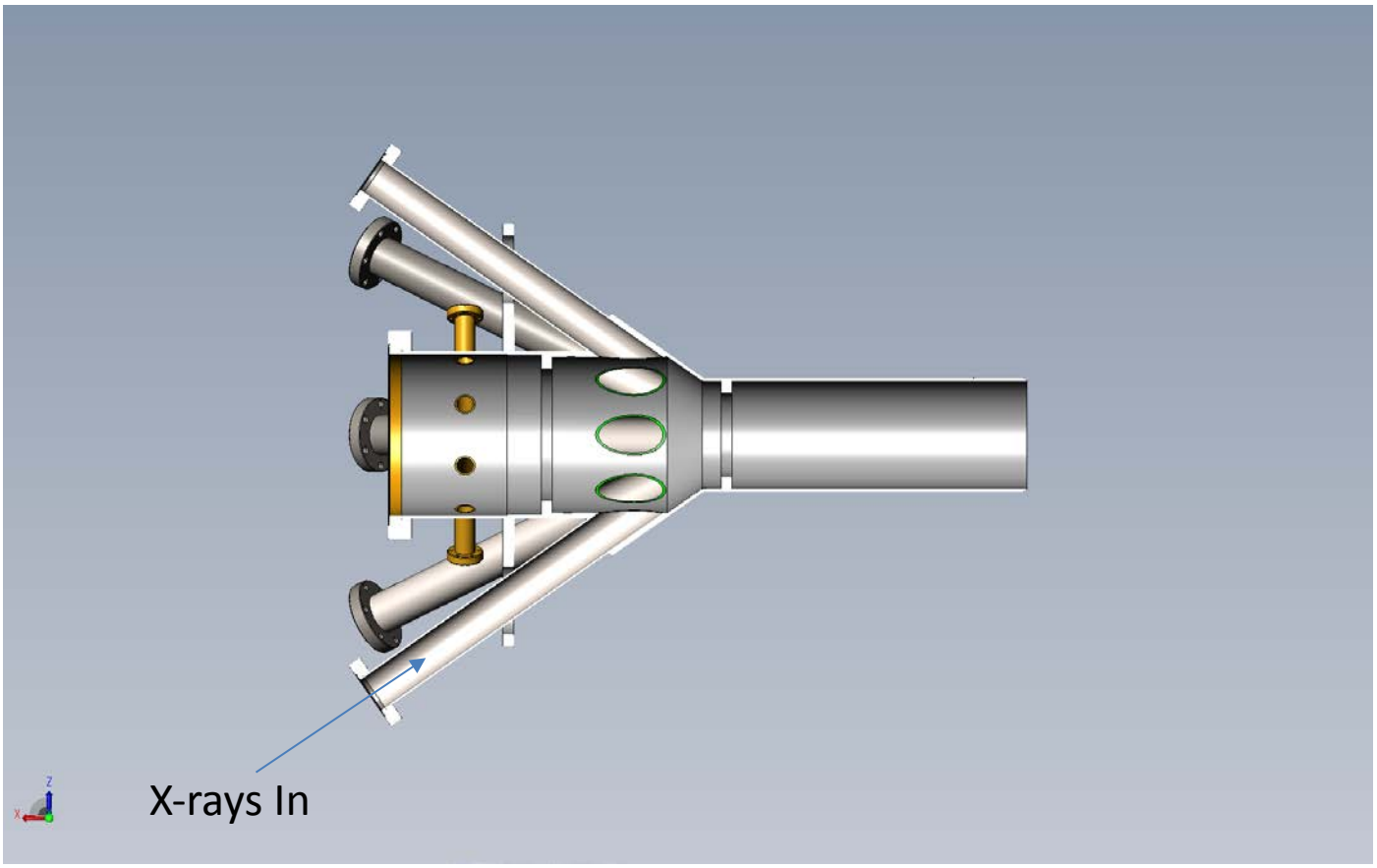

Figure 3: Cross-section view of LARIAT-2 vacuum chamber, with x-ray entrance port indicated.

3 ENDSTATION SAFETY

3.1 Radiation Shielding

The design of all radiation shielding is based upon calculations presented in NSLS-II Tech Note #275. These calculations show that for soft, monochromatic beam 1 mm of stainless steel equivalent is sufficient to reduce radiation external to chamber to below 0.05 mrem/hr and as low as reasonably achievable. The minimum chamber thickness is 1.5 mm stainless steel. If the sample is removed from the chamber, beam will impact a portion of the chamber which is 3 mm stainless steel. Since this chamber will act as the termination of the beamline, the chamber is considered a radiation safety component.

3.2 Radiation Safety Components

In addition to the vacuum chamber discussed above, the LARIAT-2 endstation has a photon shutter (PSH9) located upstream of the chamber and a vacuum switch on the vacuum system which act as radiation safety components. These two components were reviewed previously as part of the 07-ID SST beamline instrumentation readiness review.

3.3 Configuration control

All radiation safety components are under configuration control, in accordance with the NSLS-II Radiation Safety Component Configuration Management procedure (PS-C-ASD-PRC-055). These are located in Sections D and E of the radiation safety component checklist, and are listed on the checklist as items 7-ID1-PSH-09, 7-ID1-VA-30, 7-ID1-VVS-02, and 7-ID1-SW-07.

3.3 Personnel Protection System (PPS)

The PPS system monitors the vacuum switch on the chamber, which is interlocked with the upstream photon shutter, PSH9. In the event of a vacuum loss, PSH9 will close immediately.

3.4 Hazard Identification and Mitigation

LARIAT-2 contains a high temperature superconducting magnet capable of producing magnetic fields of up to 9 T inside the magnet bore. A survey of the magnetic field has been completed to determine the 5 Gauss line. Operations of the magnet are controlled by a work instruction; magnetic field warning placard are placed at the 5 Gauss line when the magnet operates.

LARIAT-2 has numerous electronics systems, including high voltage. All electronics have been inspected for electrical safety by BNL electricians.

Overall, the LARIAT-2 endstation is similar to other experimental stations that are already in operation at SST and NSLS-II. A USI evaluation has been conducted and it was determined that the anticipated activities at the beamline do not violate the existing SAD and ASE. All relevant NSLS-II procedures and safety practices were followed during the design and construction of the beamline to mitigate the hazards identified in these document.

4 INSTRUMENT READINESS

4.1 Survey and alignment

LARIAT-2 is installed according to the specifications and final designs. Installations of the components are verified and documented by the NSLS-II Survey group, working closely with the beamline staff.

4.2 Utilities

The following services/capabilities are deployed for LARIAT-2:

- Electrical power distribution. This system is unchanged from the beamline IRR.
- Distribution of process chilled water, water-cooled racks.
- Network connectivity.
- Cabling and piping support structures for all utilities.

4.3 Vacuum System and Pressure Safety

The vacuum pressure for LARIAT-2 is to be maintained at 10^{-7} Torr or better. LARIAT-2 shares vacuum with the rest of the SST-1 beamline.

Bleedup of vacuum chambers will be performed following the NSLS-II vacuum venting procedure.

4.4 Controls

All motorized components have been tested by beamline staff and documented. The individual motors are accessible using standard EPICS commands as well as the LARIAT-2 instrument software.