National Synchrotron Light Source II

NSLS-II SRX Beamline KB Mirror Control System FDR

Jun Ma
Control Engineer

11 December 2018

U.S. DEPARTMENT OF ENERGY | Office of Science

BROOKHAVEN NATIONAL LABORATORY

Outline

- Motion Axes
- Piezo-expansion control
  - With Delta Tau Brick controller
  - With PI E-518 controller
- Piezo-walker control
- Phytron in-vacuum stepper control
- Other devices
- Software packages

Motion Axes

- Two PI Piezo-expansion actuators
  - Mirror Fine motion
  - PI P-841
  - 30 micro travel range
  - Up to 1nm resolution
- Two PI NEXLINE Piezo-walker actuators
  - Mirror Coarse motion
  - PI Nexline N-111
  - 2mm travel range
  - Up to 5nm resolution
- Two Pytron in-vacuum stepping motors
  - Kohzu motorized stage
  - Mirror translation
  - 10mm travel range
  - Up to 1 micro resolution

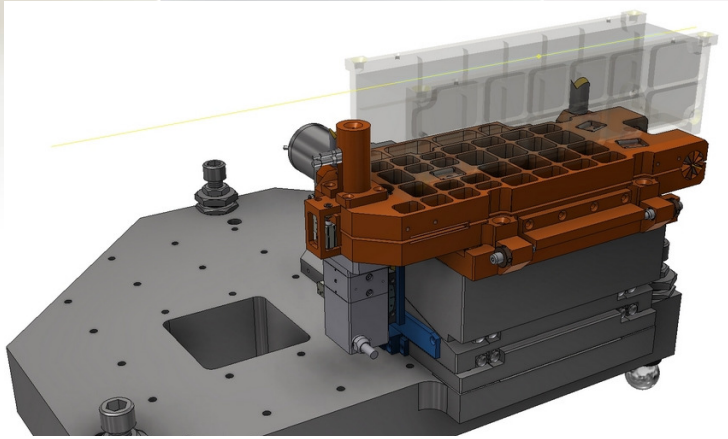

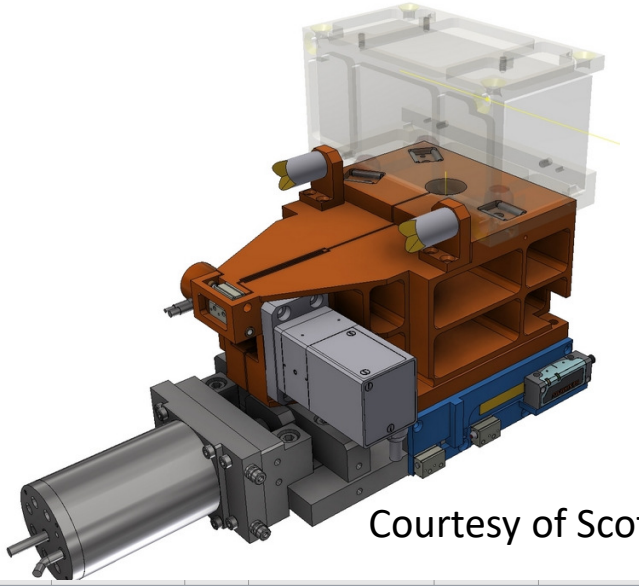

Courtesy of Scott Coburn

Motion Controller					130						
Hutch	Device	Instance	Network Name	Device Name	Subnet	IP	Full IP	Port	Type	Rack	Notes
D	mc	19	xf05idd-mc19.cs.nsls2.local	XF:05IDD-CT{MC:19}	2	115	10.5.2.115		PI E-518	RG:D2	Preloaded Piezo Actuator
D	mc	20	xf05idd-mc20.cs.nsls2.local	XF:05IDD-CT{MC:20}	2	116	10.5.2.116		PI E-711	RG:D2	Nexline Linear Actuator
D	mc	21	xf05idd-mc21.cs.nsls2.local	XF:05IDD-CT{MC:21}	2	117	10.5.2.117		Brick Controller	RG:D2	Preloaded Piezo Actuator

Piezo-expansion with DT Controller

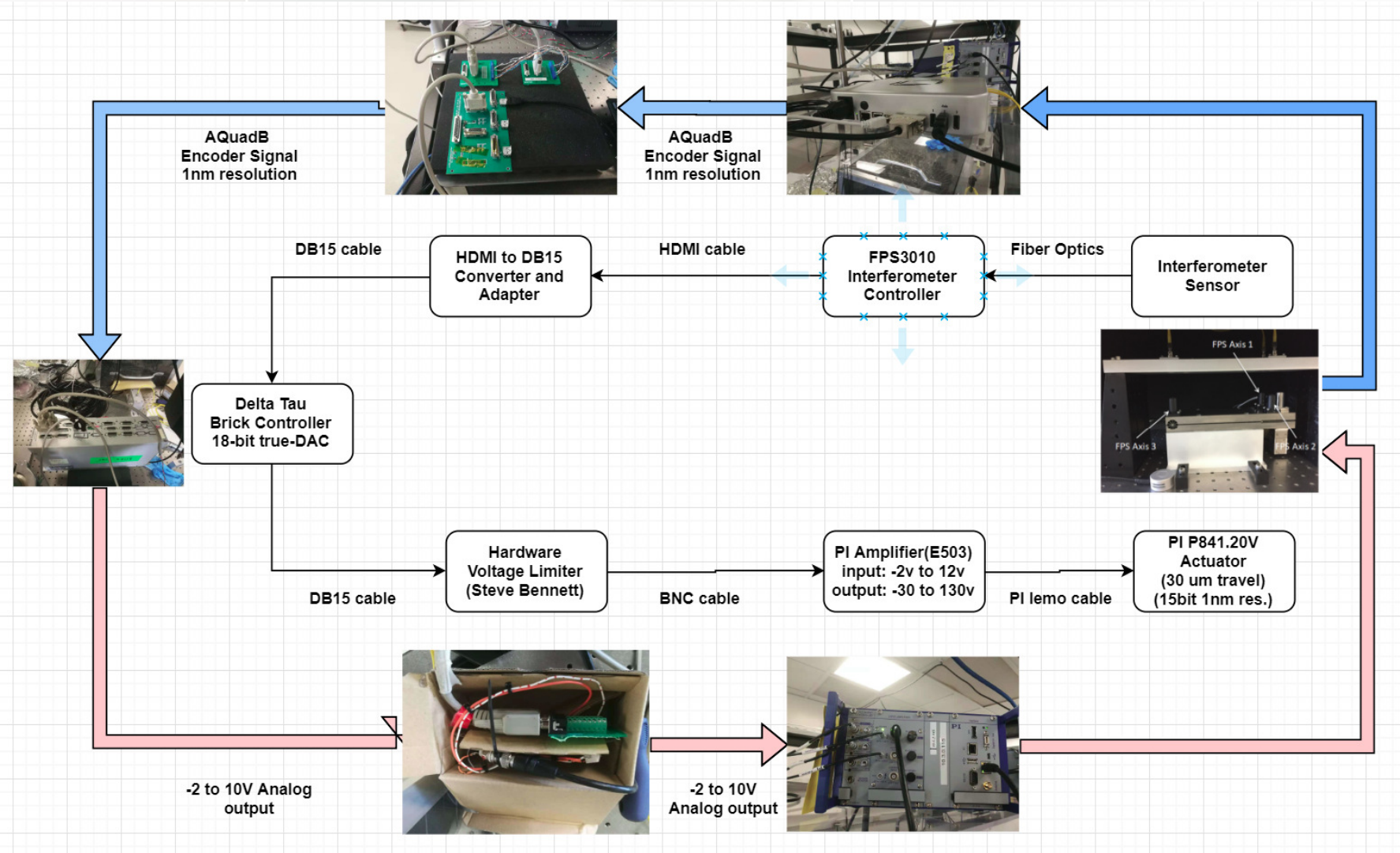

Piezo Expansion Testing Result

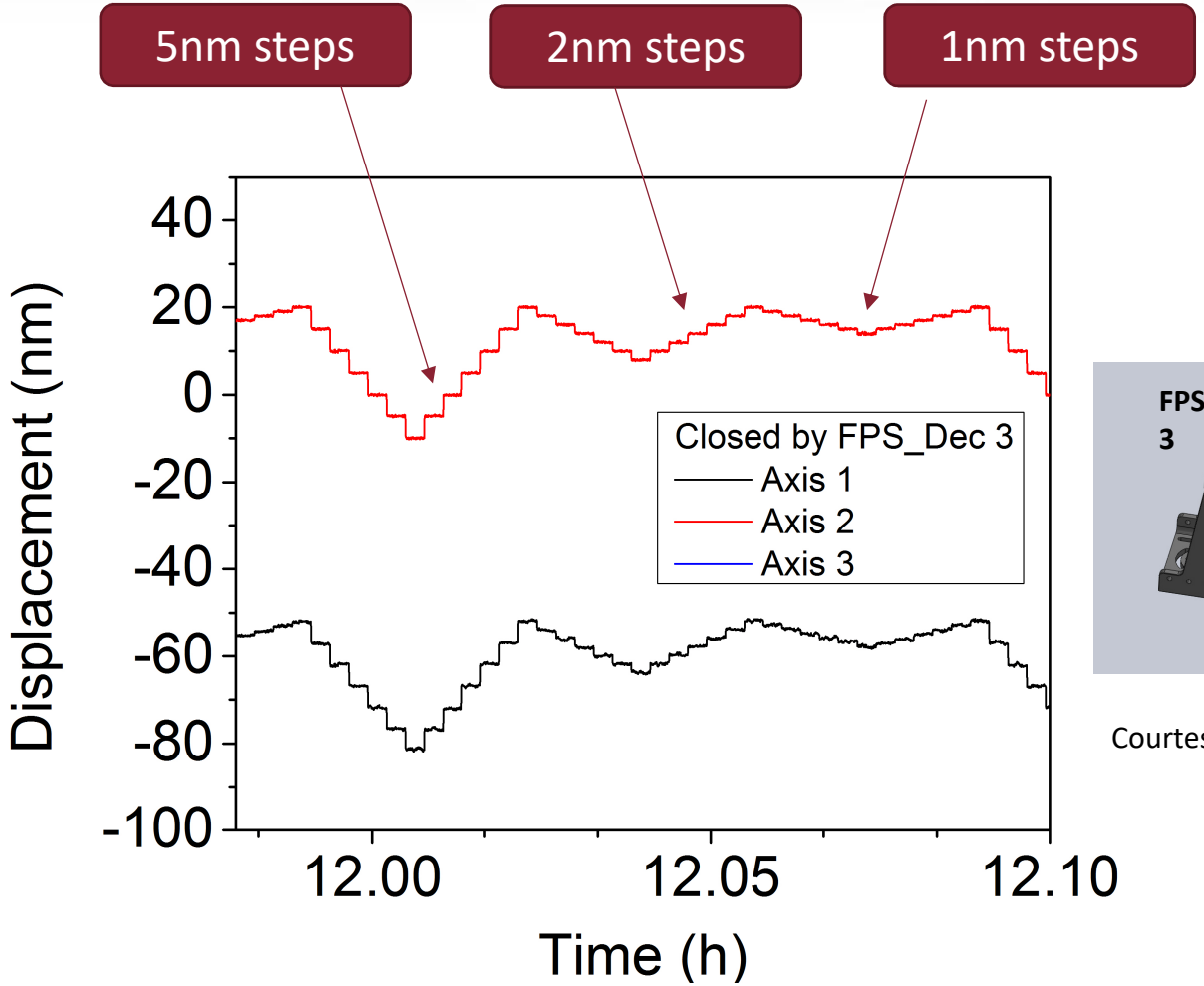

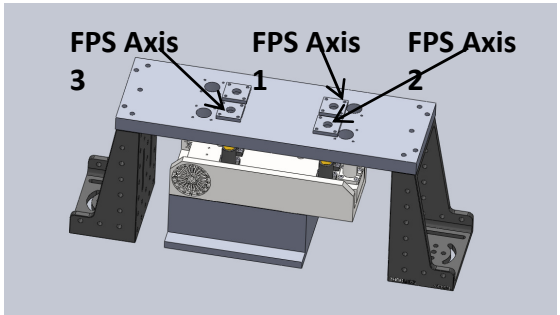

Courtesy of Weihe Xu and Scott Coburn

Piezo-expansion With PI Controller

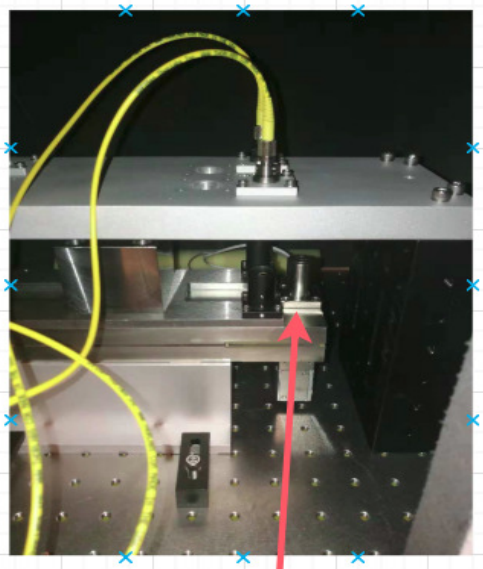

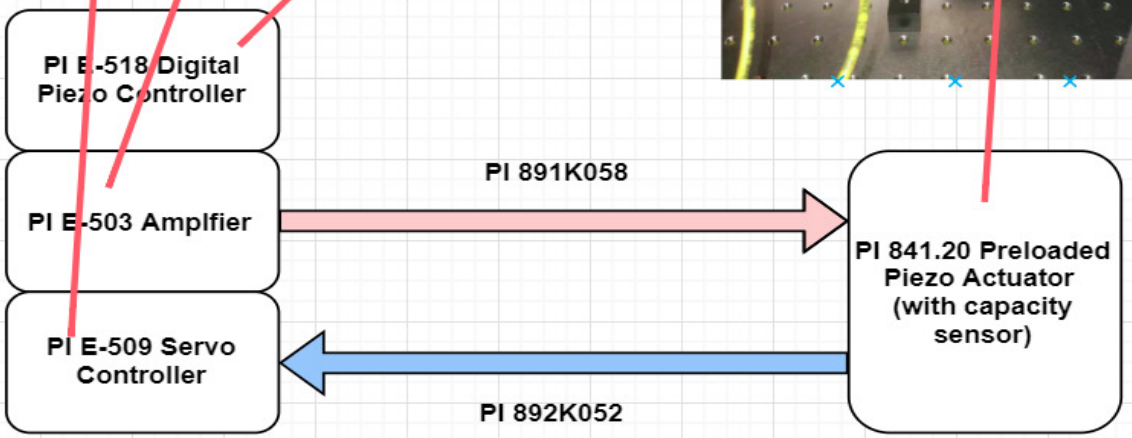

Piezo-walker control Diagram

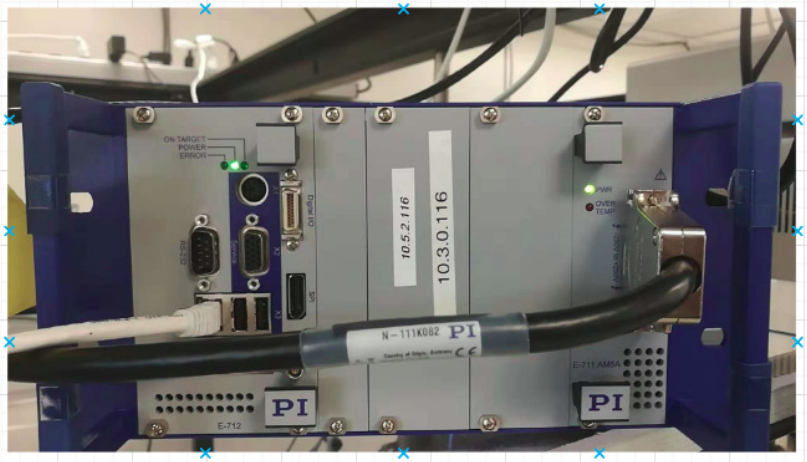

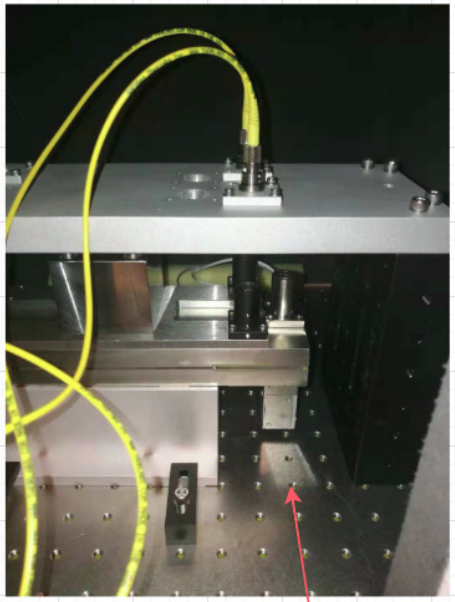

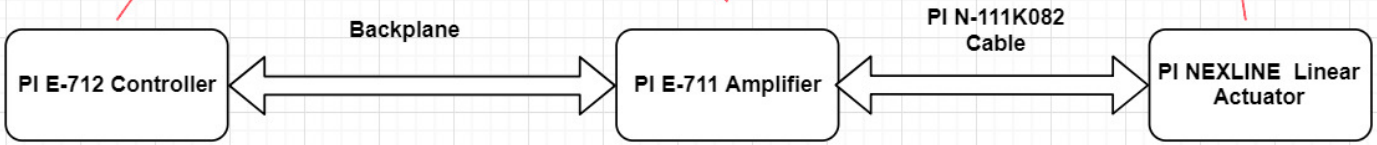

Phytron in-vacuum stepper control

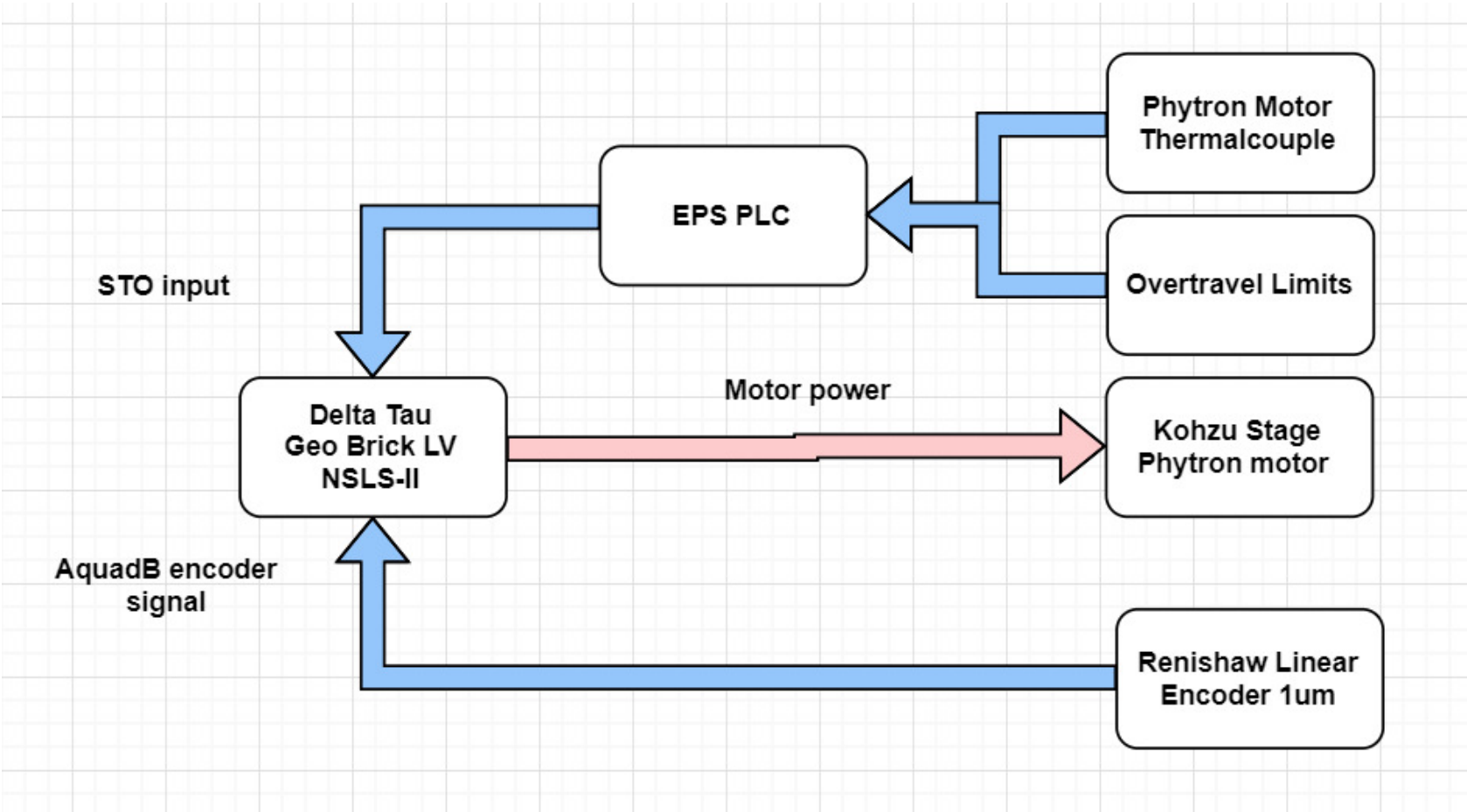

Other Devices

- IO devices
  - Controlled with PLCs or moxa
- Vacuum pumps
  - NSLS-II standard pump controllers
- Vacuum gauges
  - NSLS-II standard gauge controllers
- Thermocouples
  - Interlock/EPS
    - EPS PLC
  - General purpse
    - PLC (non-EPS) or moxa

Software packages

- Standard EPICS IOCs for device level control, with features of iocStats, autosave, and PV lists (for Channel Finder applications).
- Engineering screens will be done with Control System Studio(CSS), with tight integration with history viewing (data-browser), alarm handling and electronic logbook (Olog)
- Data acquisition with Bluesky system.

Acknowledgments

(alphabetical by last name)

- Steve Bennett
- Yong Chu
- Andy Kiss
- Evgeny Nazaretski
- Randy Smith
- Chris Stebbins
- Ryan Tappero
- Huijuan Xu
- Weihe Xu
- Z. Yin