Optics figure error in mounted state: Our experience at NSLS-II (soft X-ray beamlines)

Joseph Dvorak

March 26, 2019

U.S. DEPARTMENT OF ENERGY | Office of Science
BROOKHAVEN NATIONAL LABORATORY

Acknowledgements

Work would not have been possible without the excellent and timely assistance of NSLSII Metrology

Overview

Not an exhaustive account of every optic we have mounted

Rather several examples chosen to illustrate where we need to put in more effort based on my experience

All optics were specified to have removeable holders so that metrology could be done with the mirrors in the mounted state.

Side bounce mirrors

ESM and SIX M1 mirrors

Planar, Internal Water Cooled, Horizontal Deflection

<u>SIX Beamline M1</u>
Active optical area: 310 mm long x 20 mm wide
Meridional radius greater than 100 km (300 km best effort)
Sagittal radius greater than 3 km
Tangential: <0.2 urad (frequency range 310^{-1} to 1 mm^{-1})
Sagittal: <0.5 urad (frequency range 20^{-1} to 1 mm^{-1})

<u>ESM Beamline M1</u>
Active optical area: 535 mm long x 16 mm wide
Meridional radius greater than 100 km (300 km best effort)
Sagittal radius greater than 3 km
Tangential: <0.2 urad (frequency range 535^{-1} to 1 mm^{-1})
Sagittal: <0.5 urad (frequency range 16^{-1} to 1 mm^{-1})

M1 Mounting Mechanics

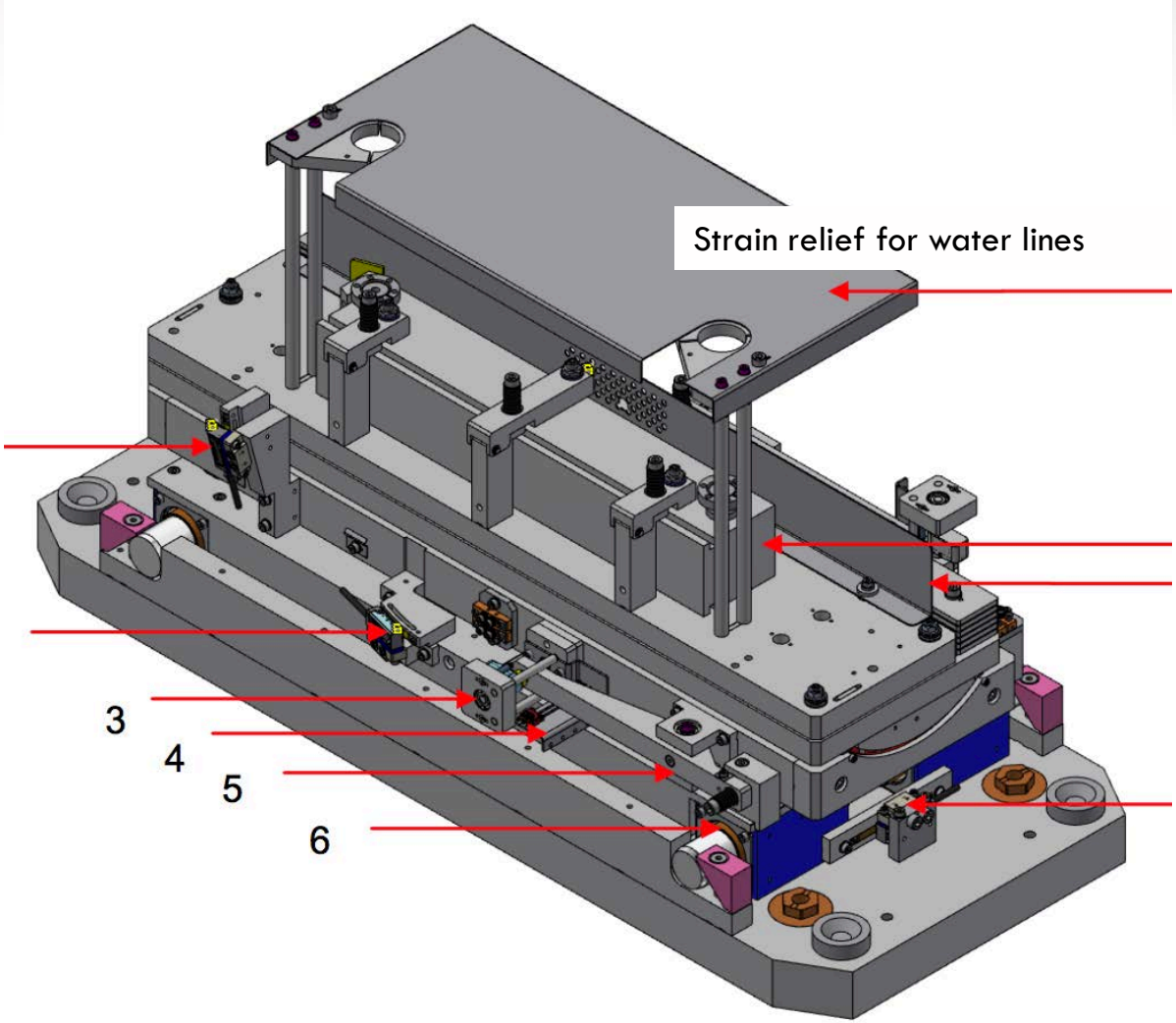

Details of clamping mechanism

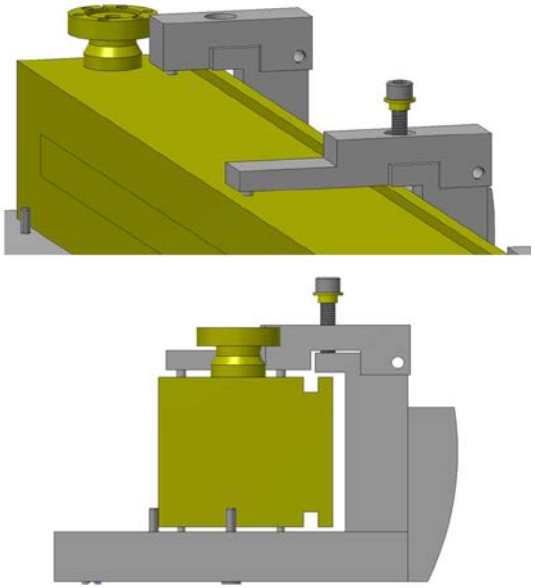

Three fixed support points, no spring compensation points

Results

Mounting of side bounce optics, even with water cooling, has proceeded in a straightforward manner.

Potential clamp induced distortional forces have little effect on the surface figure.

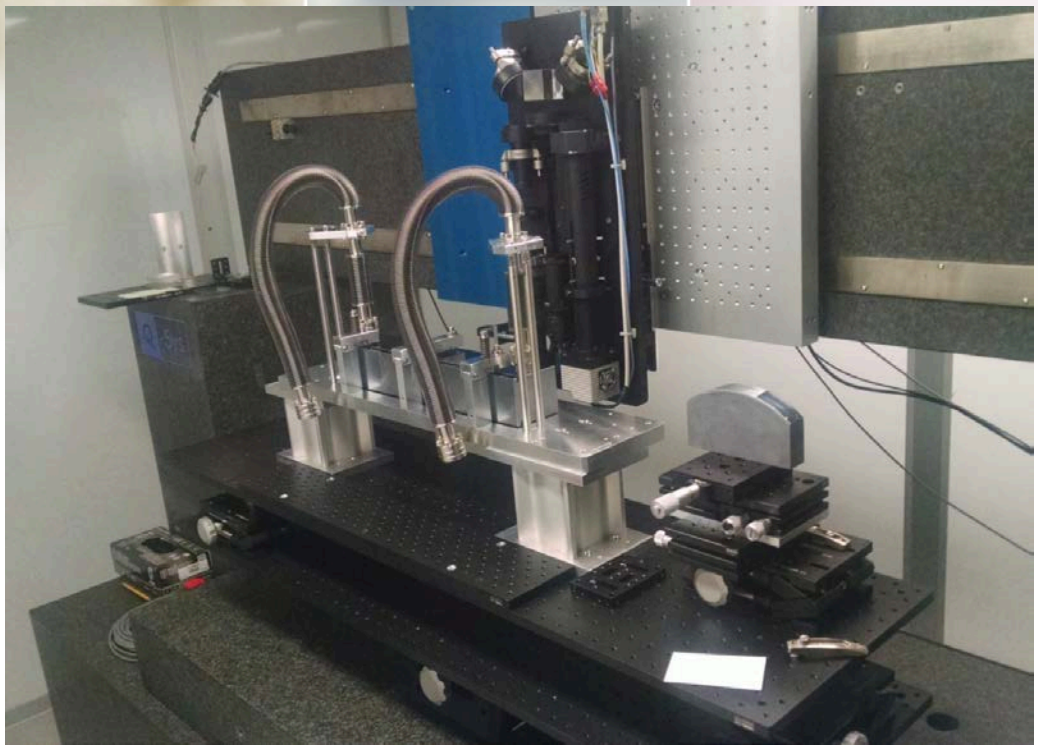

SIX M1 Mirror

	clear aperture mm	tan slope urad rms	sag slope urad rms	tan height nm rms	sag height nm rms	roughness nm rms	residual R km	notes
specified	310 x 20	≤ 0.2	≤ 0.5	not specified	not specified	≤ 0.3	≥ 100	
manufacturer		0.16	0.18	---	---	0.18	> 4000	InSync, roughness range ~2.7-241 um
unmounted		0.20	---	4.9	---		-265	Metrology done w/ mirror facing sideways
mounted in holder		0.21	---	6.8	---		> 1000	Metrology done w/ mirror facing sideways

ESM M1 Mirror

	clear aperture mm	tan slope urad rms	sag slope urad rms	tan height nm rms	sag height nm rms	roughness nm rms	residual R km	notes
specified	535 x 16	≤ 0.25	≤ 0.5	not specified	not specified	≤ 0.3	≥ 100	
manufacturer		0.21	0.40	---	---	0.14	926	InSync, roughness range ~2.7-241 um
unmounted		0.20	---	5.0	---		-183.2	Metrology done w/ mirror facing up
mounted in holder		0.20	---	10.1	---		-234	Metrology done w/ mirror facing sideways

Large Vertical Deflection Internal Water Cooled Mirrors

ESM and SIX M2 mirrors

Planar, Internal Water Cooled, Vertical Deflection

<u>SIX Beamline M1</u>
Active optical area: 430 mm long x 20 mm wide
Meridional radius greater than 100 km (300 km best effort)
Sagittal radius greater than 3 km
Tangential: <**0.1 urad** (frequency range 430^{-1} to 1 mm^{-1})
Sagittal: <0.5 urad (frequency range 20^{-1} to 1 mm^{-1})

<u>ESM Beamline M1</u>
Active optical area: 515 mm long x 22 mm wide
Meridional radius greater than 100 km (300 km best effort)
Sagittal radius greater than 3 km
Tangential: <0.2 urad (frequency range 515^{-1} to 1 mm^{-1})
Sagittal: <0.5 urad (frequency range 22^{-1} to 1 mm^{-1})

As Polished (unmounted) Metrology

SIX Beamline M2

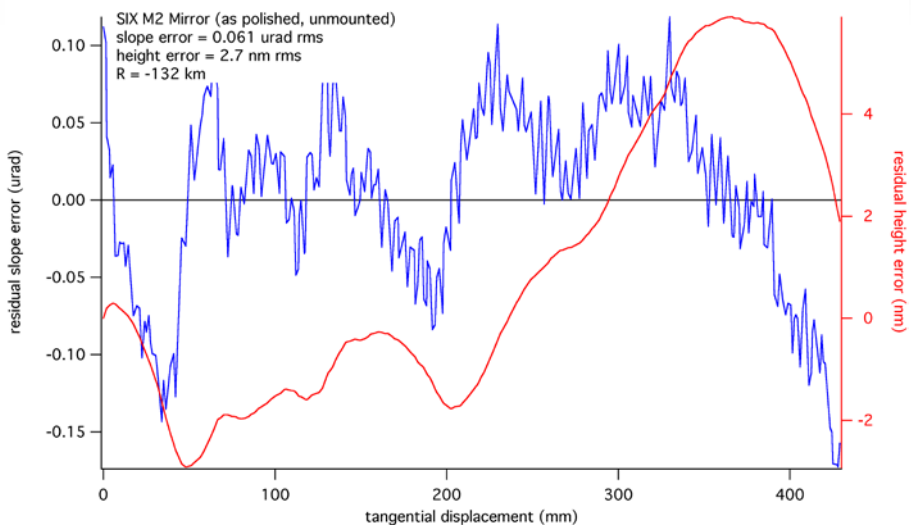

slope error: 0.061 rms urad over 430 mm!

R = -132 km

ESM Beamline M2

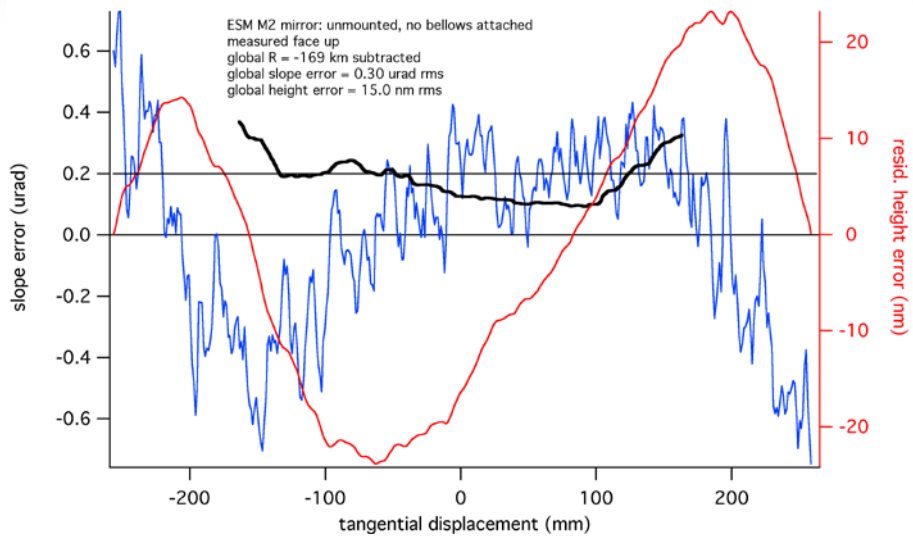

slope error: 0.30 rms urad

R = -169 km

Global slope error did not meet specifications

However, the mirror was accepted for 'footprint' reasons

M2 mirror holder schematic (Similar for ESM and SIX)

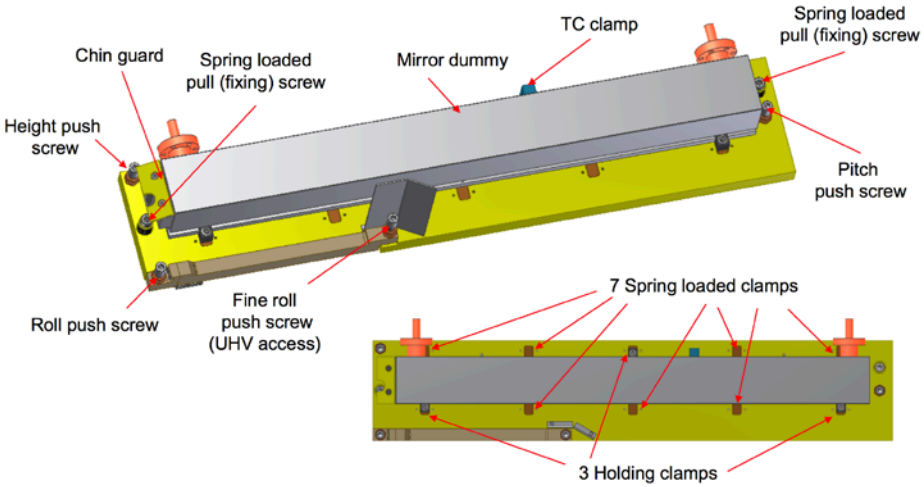

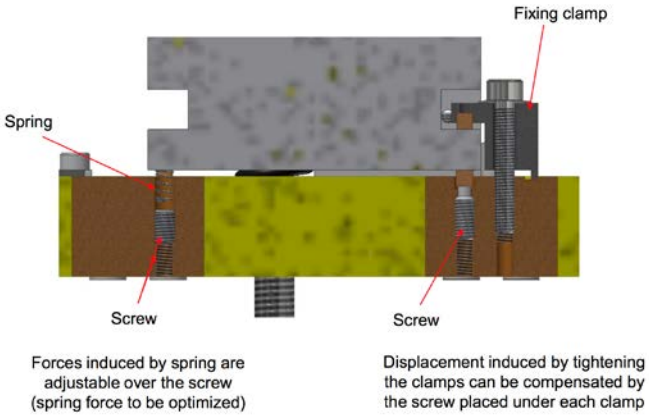

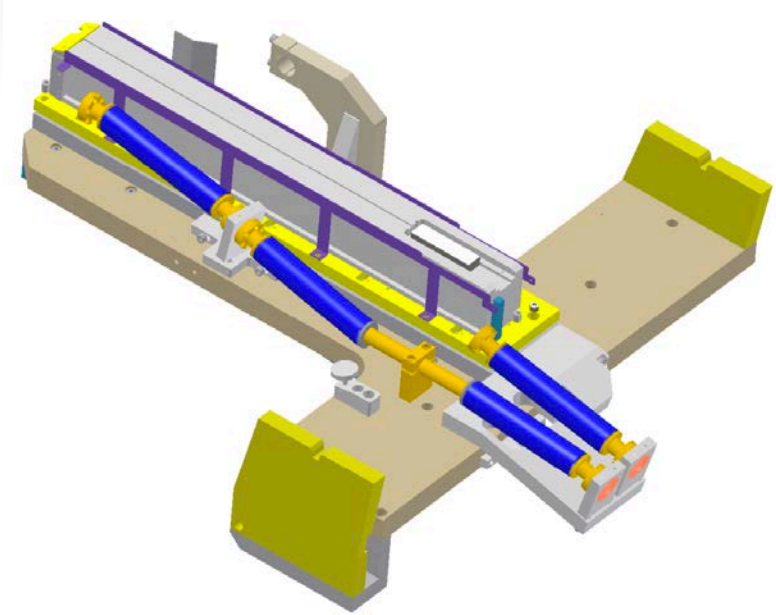

Idea is that spring loaded compensation points will counteract gravity forces and reduce the slope error.

LOL

M2 mirror mounting – Spring Compensation

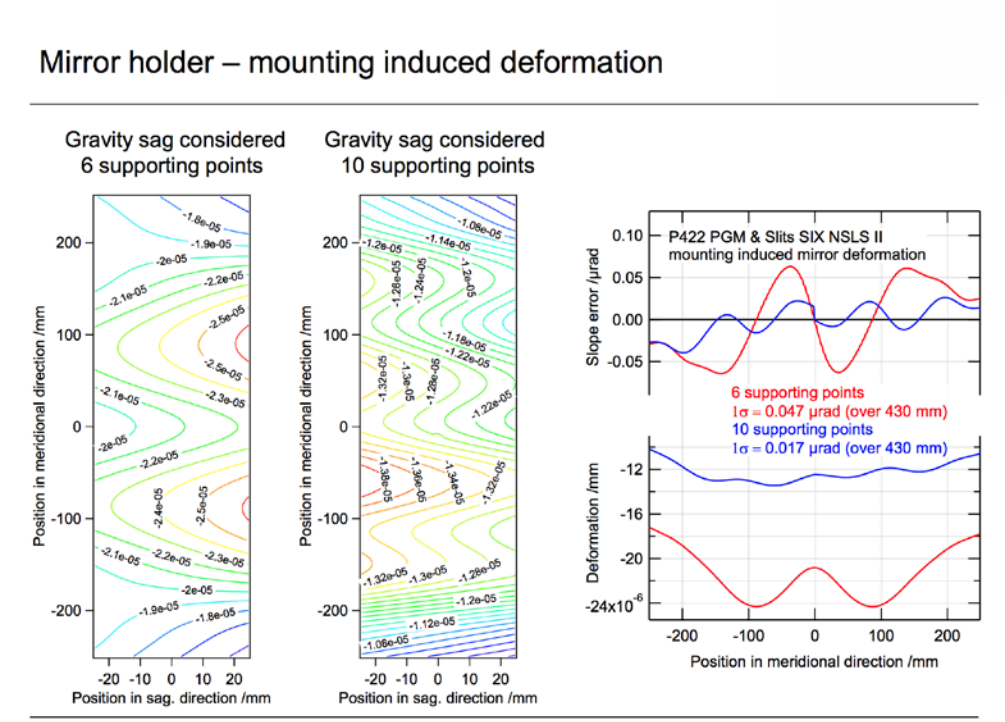

FEA analysis will tell you everything is perfect…

It does not work:

1. Forces due to poor clamp design and due to water cooling lines dominate.
2. There is no practical way to know what forces you are applying with the springs
3. There is no practical way to reproducibly vary the spring force.
4. Even if you could, you have seven springs to try to vary. Metrology feedback is way too slow for this to be effective.
5. It is very difficult to predict distortion forces for misaligned clamps, cooling line forces to feed into FEA.

SIX M2 installed in monochromator

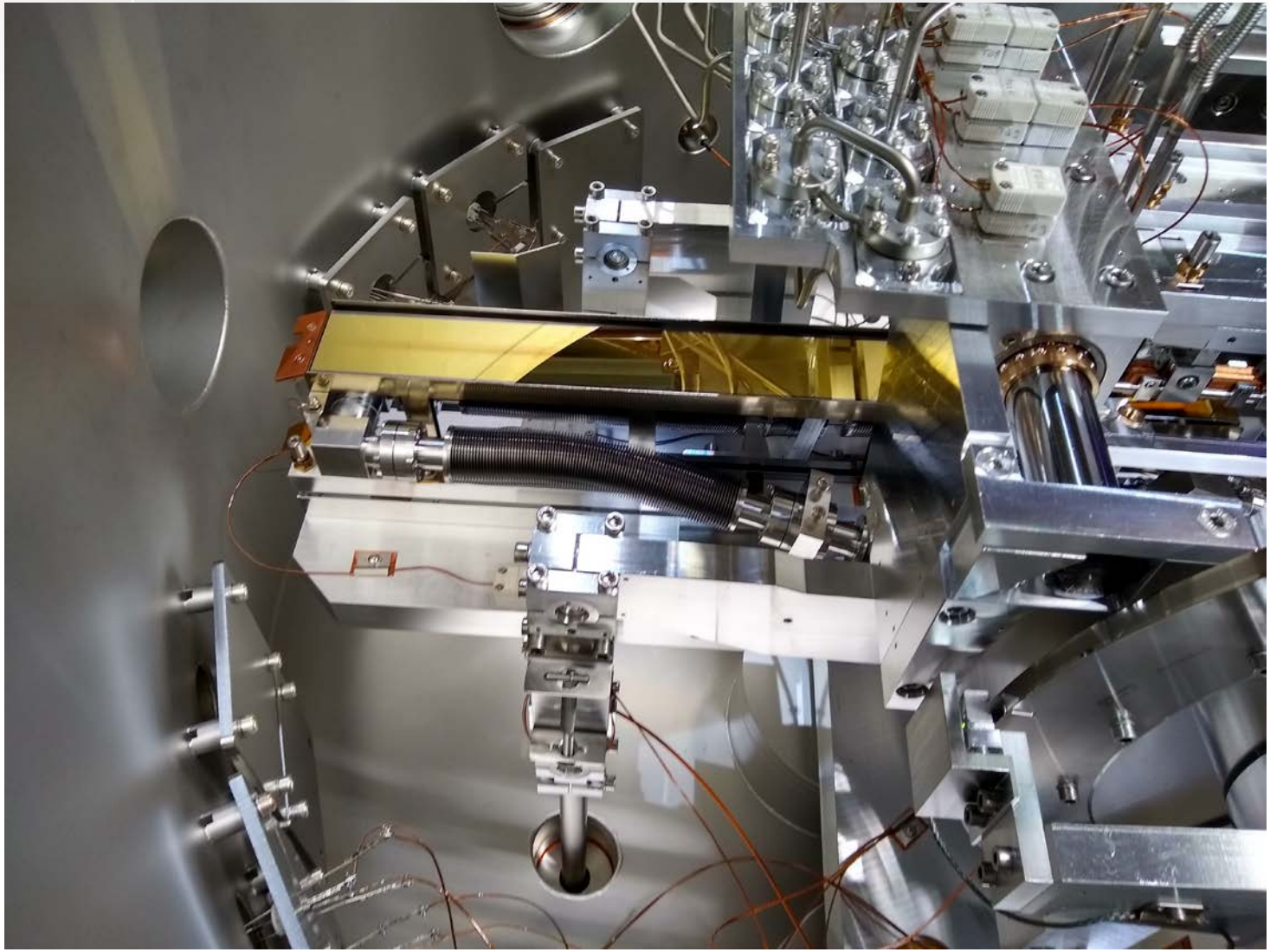

M2 mirror mounting – Results

SIX M2: Optical specifications of premirror in mounted and clamped state	
Tangential slope error	Any contiguous 120 mm length along the mirror must have an rms tangential slope error < 0.1 urad, after subtraction of a best fit radius of ≥ 50 km.
Sagittal slope error	Sagittal: < 0.4 urad

ESM M2: Optical specifications of premirror in mounted and clamped state	
Tangential slope error	Any contiguous 120 mm length along the mirror must have an RMS tangential slope error <0.2 µrad, after subtraction of a best fit radius of ≥ 50 km.
Sagittal slope error	Sagittal: <0.5 µrad

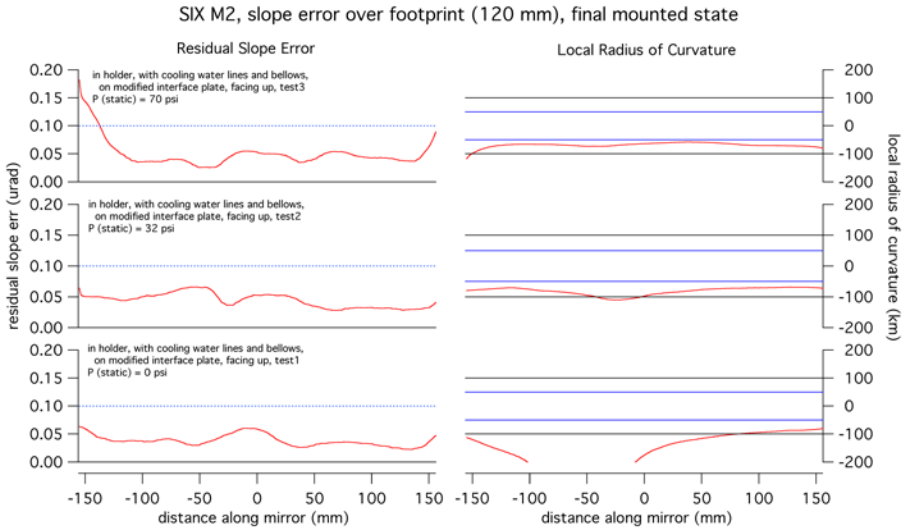

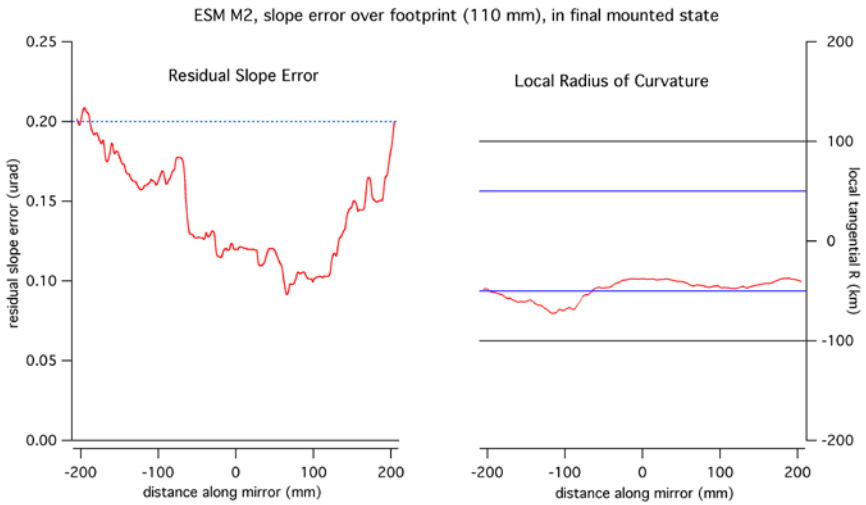

SIX: meets specs, even with internal pressure

ESM: slope meets specs
R: close to specs

Comments:
- Clamping / water cooling / pressure forces dominate distortions.
- Spring compensation points were unusable, and ineffective.
- Optical system must be able to adjust to changes in local radius of curvature.

Gratings

Side Cooled
Optical area: ~200 mm long x ~25 mm wide
Downward deflection (optical surface is facing down) for ESM and SIX

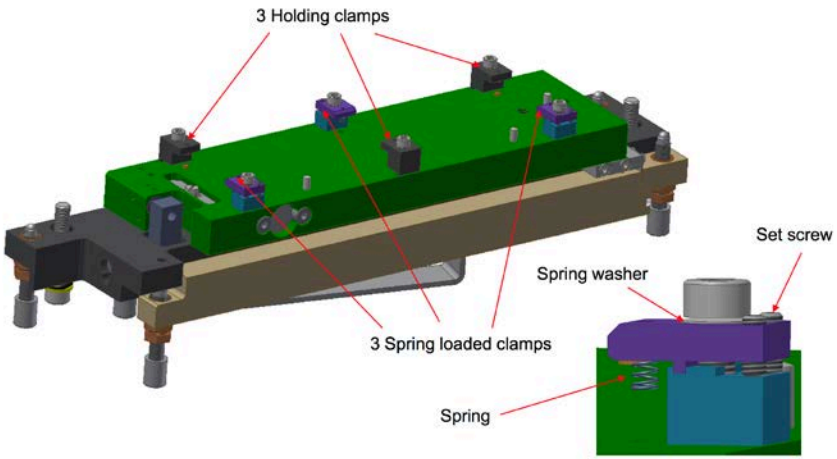

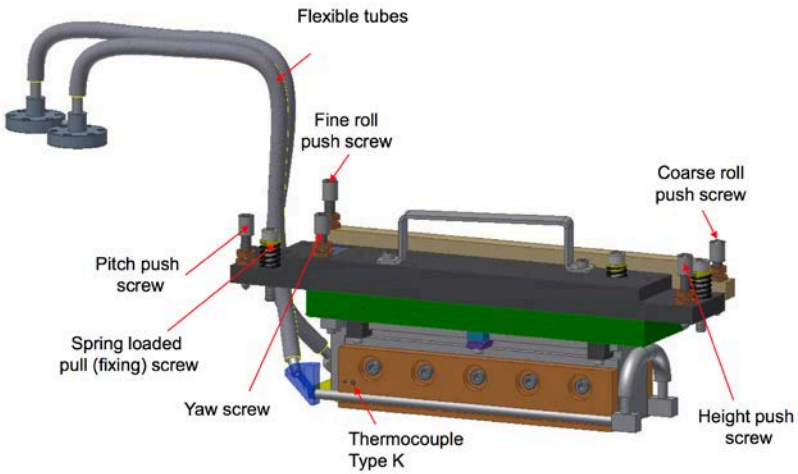

Comments on holders:

1. No positive positioning between clamp and copper pad on base
2. No way at all to know what force you are applying with the base clamps
3. No strain relief at all for the water cooling lines
4. Spring loaded compensation points are included for your amusement
5. No practical way to know how much force you are applying to the side clamps, but at least it is reproducible.
6. High possibility of changing mounting forces during installation.

Result is that mounting the gratings is a real trial and error process

Gratings

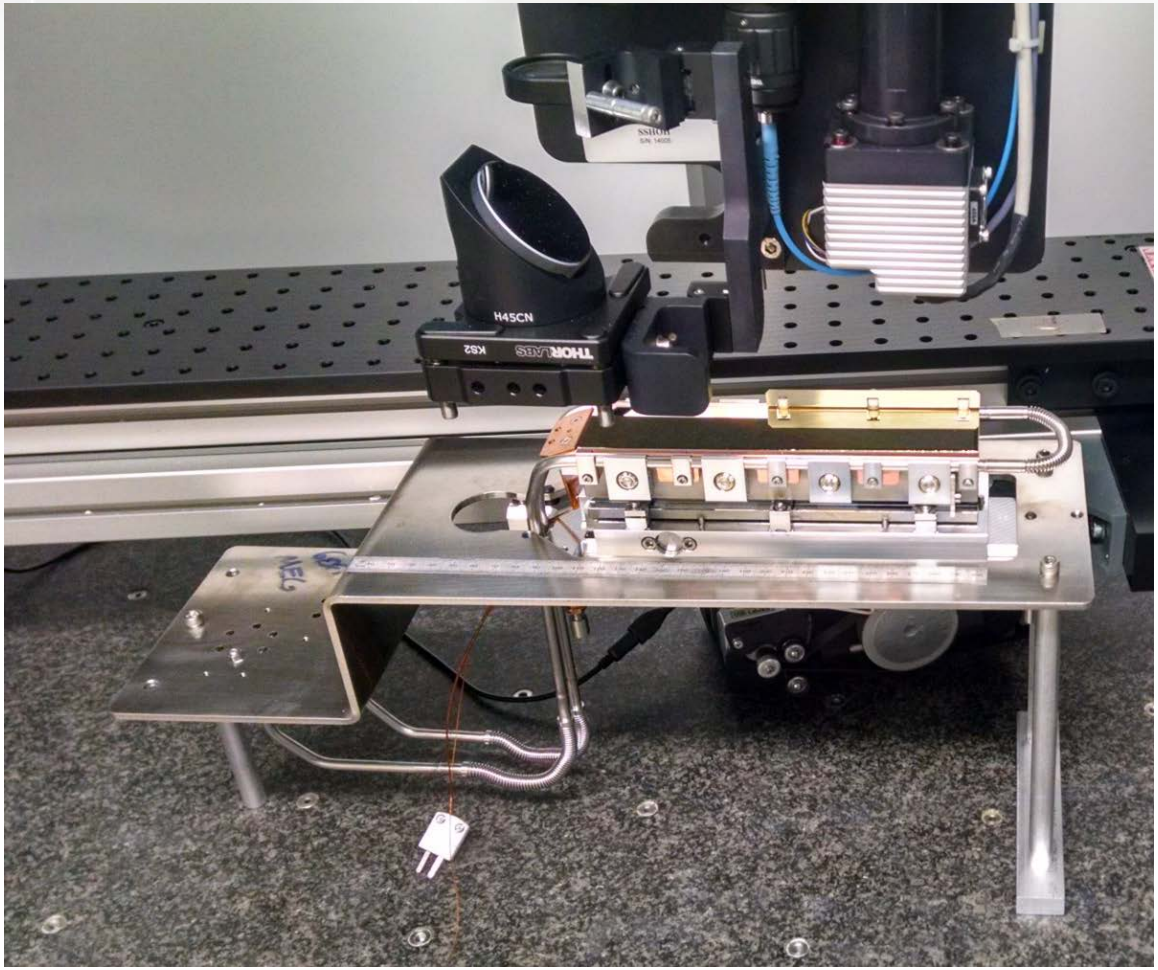

Gratings: Results

First Try

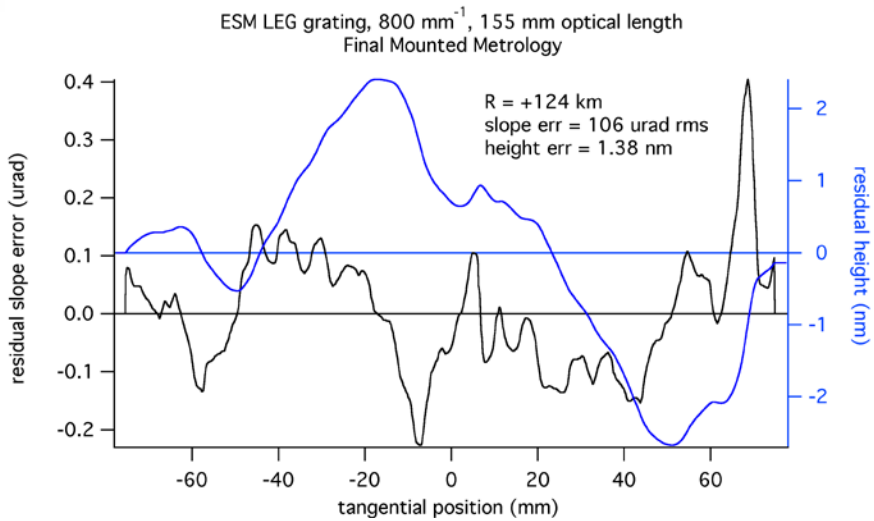

7 Days of Trial and Error
Base clamp and side clamp manipulations

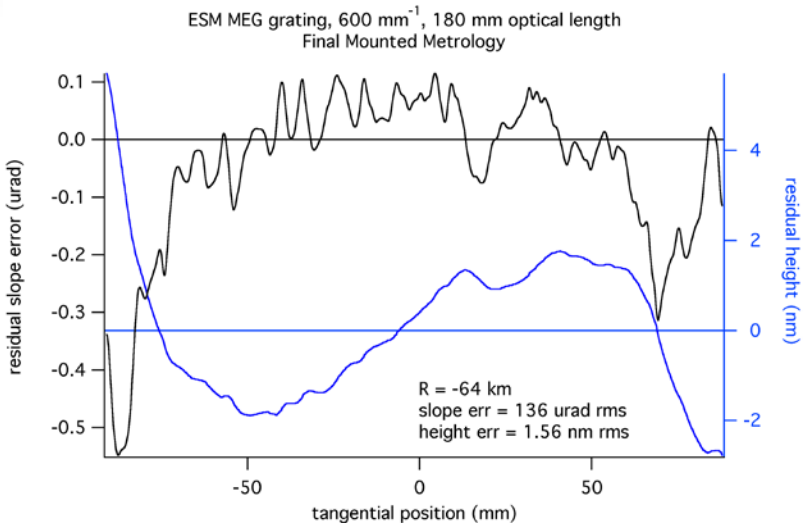

Gratings: Results

SIX Beamline Gratings

	Blank substrate			Grating mounted		
	rms slope	rms height	R	rms slope	rms height	R
	nrad	nm	km	nrad	nm	km
MBG 500 mm^{-1} [3]	59	1.06	+139	166	4	---
HBG 1200 mm^{-1} [3]	82	2.04	---	65	---	-142
UBG 1800 mm^{-1} [1]	48	---	---	105[a]	---	-36
Spectrometer gratings						
HSG 1250 mm^{-1} [3]	45		+128	153	---	+79
USG 2500 mm^{-1} [2]	32	0.22	---	80	---	-26

(a) UBG: Slope error with 170 mm window is 67 nrad rms

ESM Beamline Gratings

	Blank substrate			Grating mounted		
	rms slope	rms height	R	rms slope	rms height	R
	nrad	nm	km	nrad	nm	km
LEG 800 mm^{-1}	39	0.37	---	106	1.38	+124
MEG 600 mm^{-1}	37	0.43	-156	136	1.56	-64
HIG 300 mm^{-1}	54	---	---	85	1.67	>200
HEG 1200 mm^{-1}	47	0.73	---	101	1.77	-106

It is challenging to get below 150 nrad slope error with these types of mountings

It is very challenging to get below 100 nrad slope error, and if you do it seems more a case of good luck

It is not possible to get below 50 nrad slope error

Radius of curvature can suffer, sometimes considerably, and is very hard to change

[1]: JYH
[2]: JYH second attempt
[3]: Inprentus original

Conclusion

We are mounting $100k optics with poorly designed mechanics

Does it work? Sometimes, but it is not a robust or predictable process, and the results are now limiting the optical quality (not the polishing)

The onus is on us to do the R & D to produce well designed holders with effective cooling.

Additional Material

SIX Beamline M1

Deflection direction: horizontal (mirror is oriented sideways)

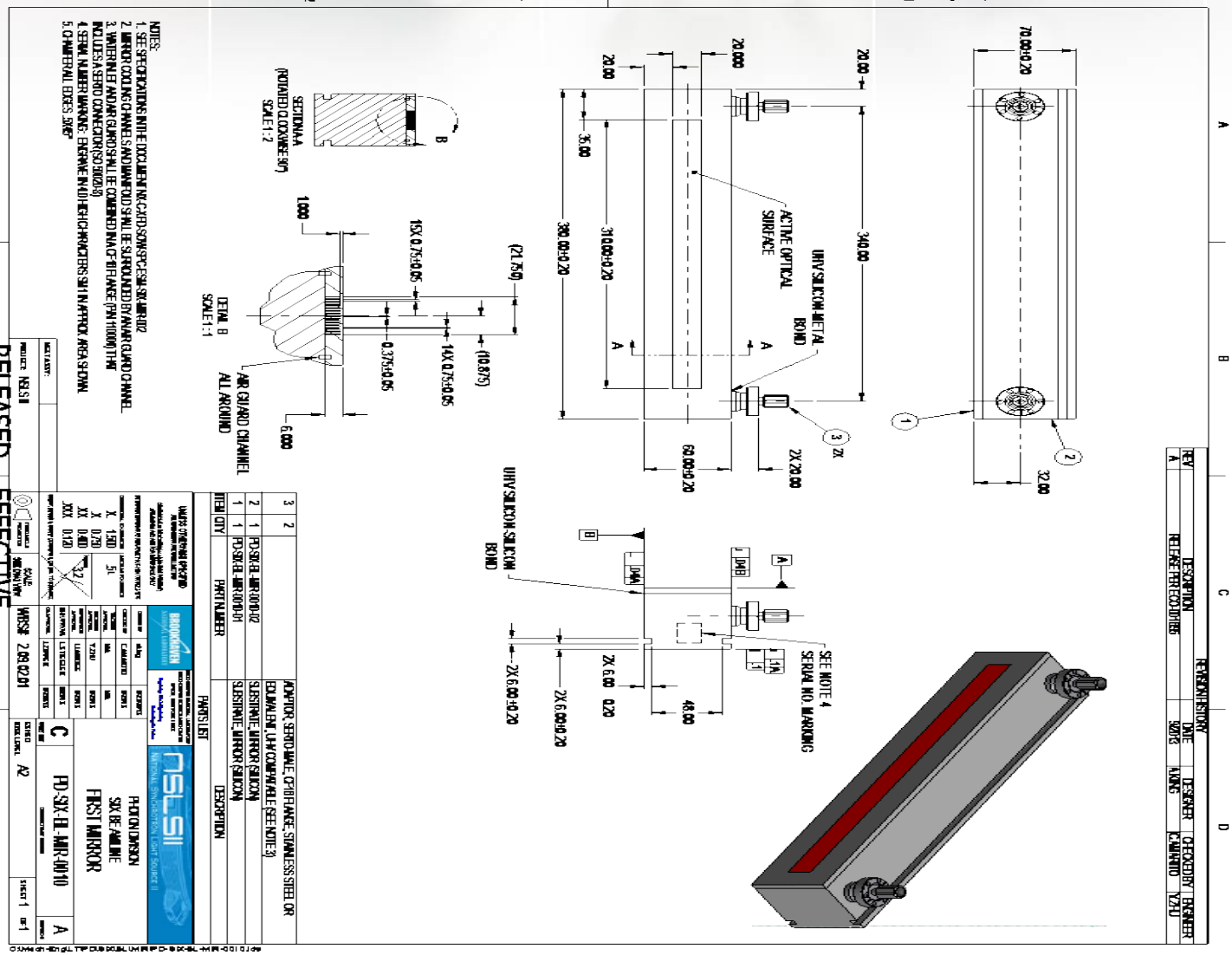

ESM Beamline M1

SIX Beamline M2

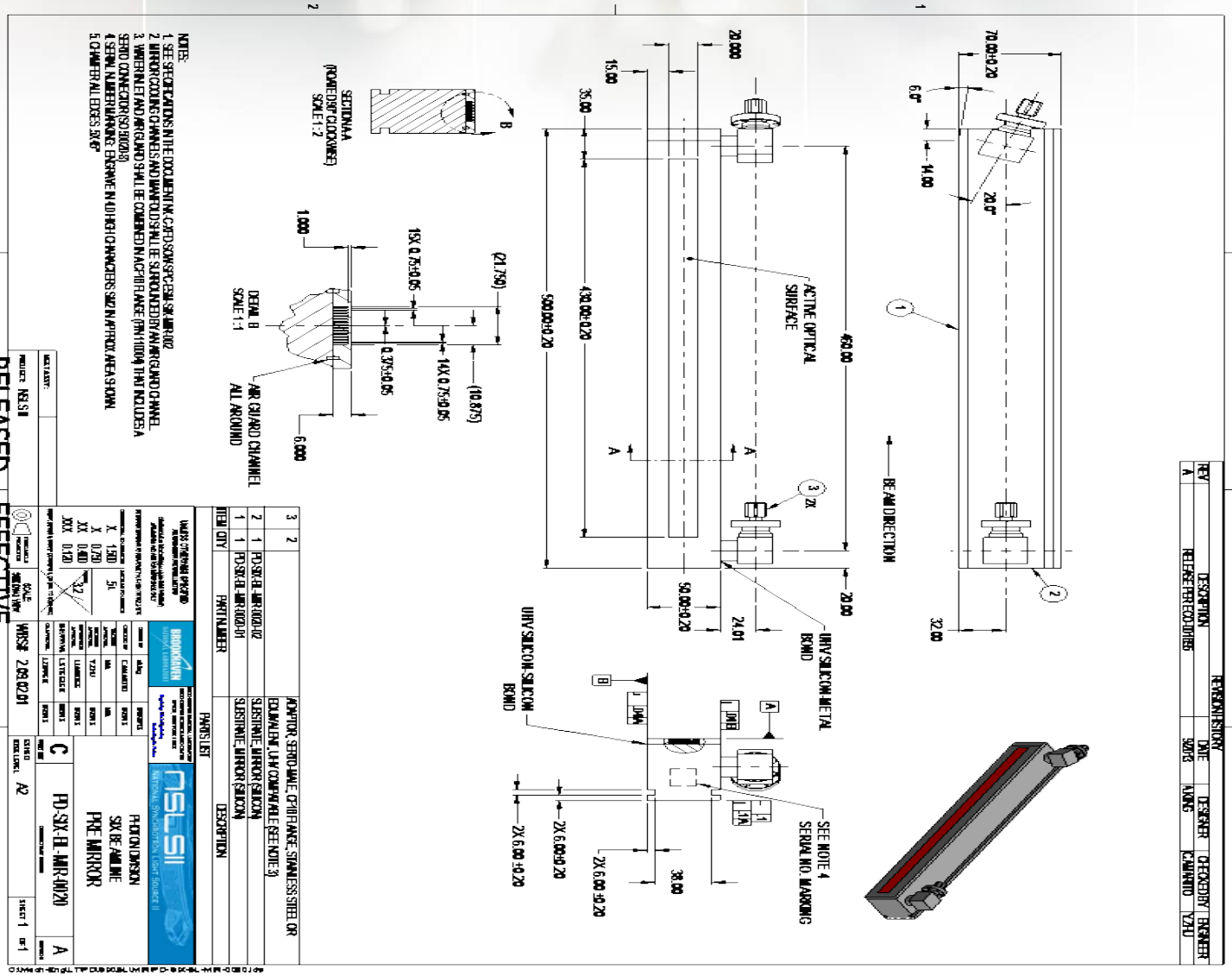

ESM Beamline M2

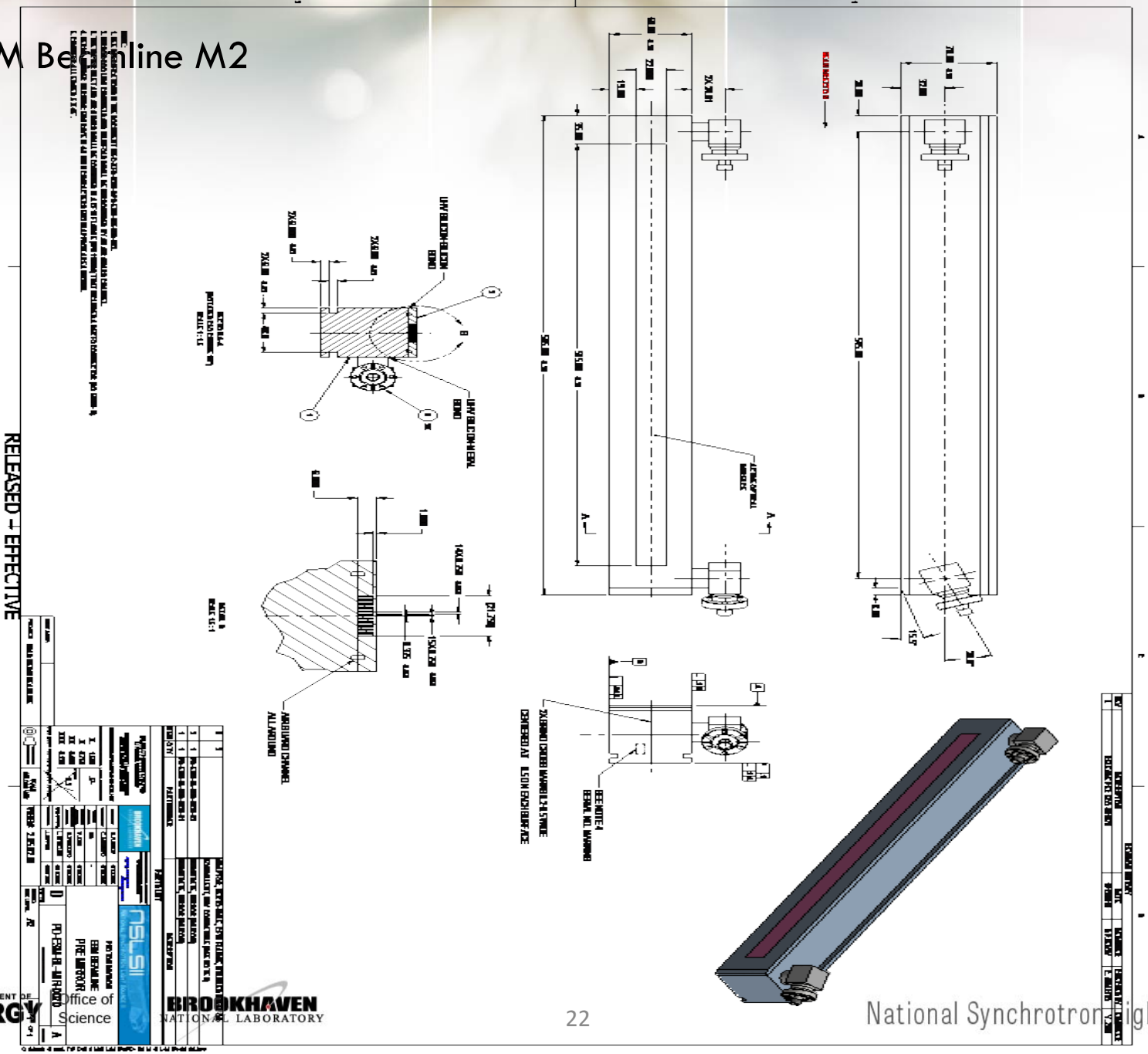
RELEASED - EFFECTIVE
PD-ESM-IB-MIRROR
PRE MIRROR
ESM BEAMLINE
PROTOTYPE
ANGLED CHANNEL
ALL AROUND
UNAVAILABLE METAL
END
SCALE 1:1
SCALE 1:5
SCALE 1:10
SEE NOTE 4
SERIAL NO. MARKING
DEVICE BELOW ALL ON ENGINEERING SURFACE
ZX-SERRATED CHEESE MARKER 1.5 STYLE
ZX-ALIGNMENT
ZX-ALIGNMENT
ZX-ALIGNMENT