Development and Production of the Soft-X-Ray and Hard-X-Ray Undulator Segments for the Linear Coherent Light Source Upgrade (LCLS-II) Project

Matthaeus Leitner, LBNL

March 26, 2019

Outline

- Introduction To LCLS-II Free Electron Laser Project
- Soft X-Ray Undulator (SXR) Production Details
- Hard X-Ray Undulator (HGVPU) Production Details
- Hard X-Ray Undulator (HGVPU) Design Challenges
- Undulator Manufacturing Oversight
- Summary: Current Undulator Production Status

LCLS-II Free Electron Laser

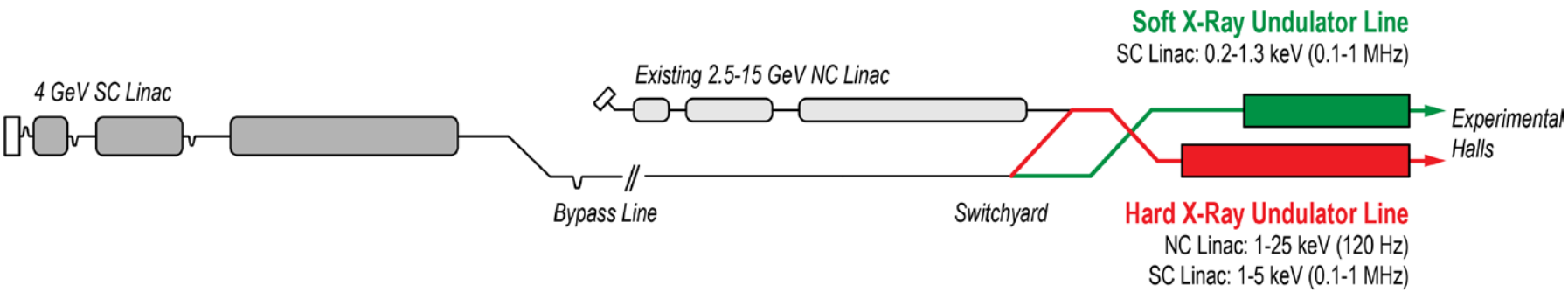

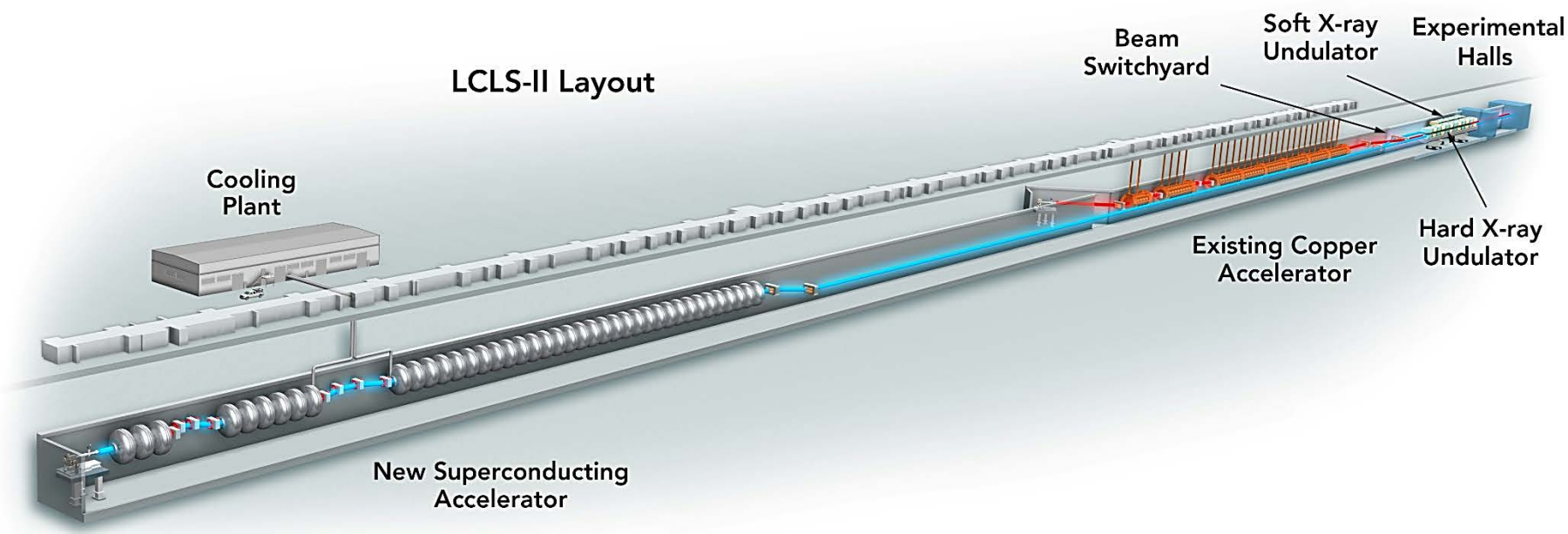

Main LCLS-II Performance Parameters

Parameter	Performance Objective
Variable-Gap Undulator Lines	2 (SXR +HXR)
Superconducting (SC) Linac FEL	
Electron Beam Energy	≥ 4 GeV
Electron Bunch Repetition Rate	929 kHz
Charge per Bunch	0.1 nC
Photon Beam Energy Range	0.2 – 5.0 keV
FEL Photon Quantity (0.1% BW)	> 10^{11} at 3.8 keV
Normal-Conducting (NC) Linac FEL	
Electron Beam Energy	15 GeV
Electron Bunch Repetition Rate	120 Hz
Charge per Bunch	0.25 nC
Photon Beam Energy Range	1 – 25 keV
FEL Photon Quantity (0.1% BW)	> 10^{12} at 15 keV

Cryoplant
Linear Accelerator
Transport Tunnel
LCLS-II
Undulator Hall
Experimental Halls
SLAC
NATIONAL
ACCELERATOR
LABORATORY

LCLS-II Free Electron Laser

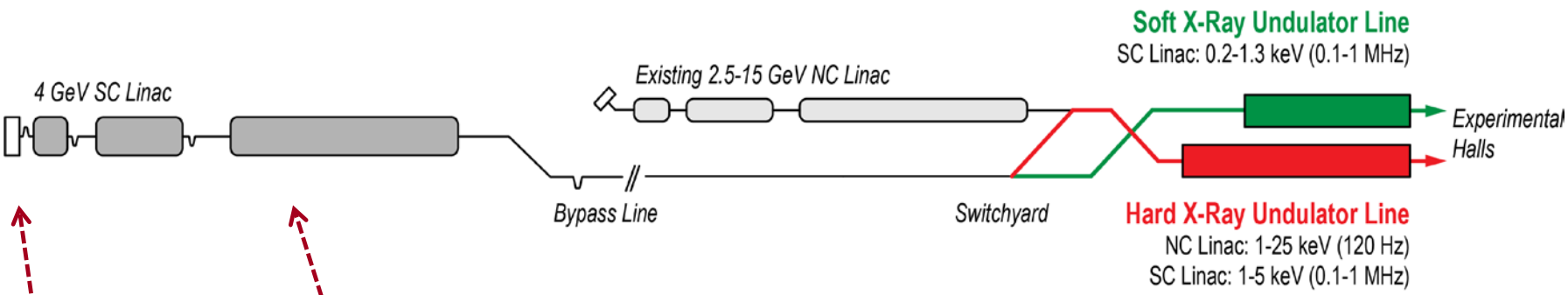

INJECTOR:

BERKELEY LAB

SC LINAC:

Fermilab

Jefferson Lab

Argonne NATIONAL LABORATORY

UNDULATOR SEGMENTS:

BERKELEY LAB

Argonne NATIONAL LABORATORY

Remaining Schedule Milestones

- Dec 2019: Undulators Installed In Tunnel
- Fall 2020: Cryomodules and Cryoplant Installed
- Spring 2021: First Light

LCLS-II: Two Variable-Gap Undulator Lines Will Provide X-Ray Pulses At Tunable Energy And High Repetition Rate

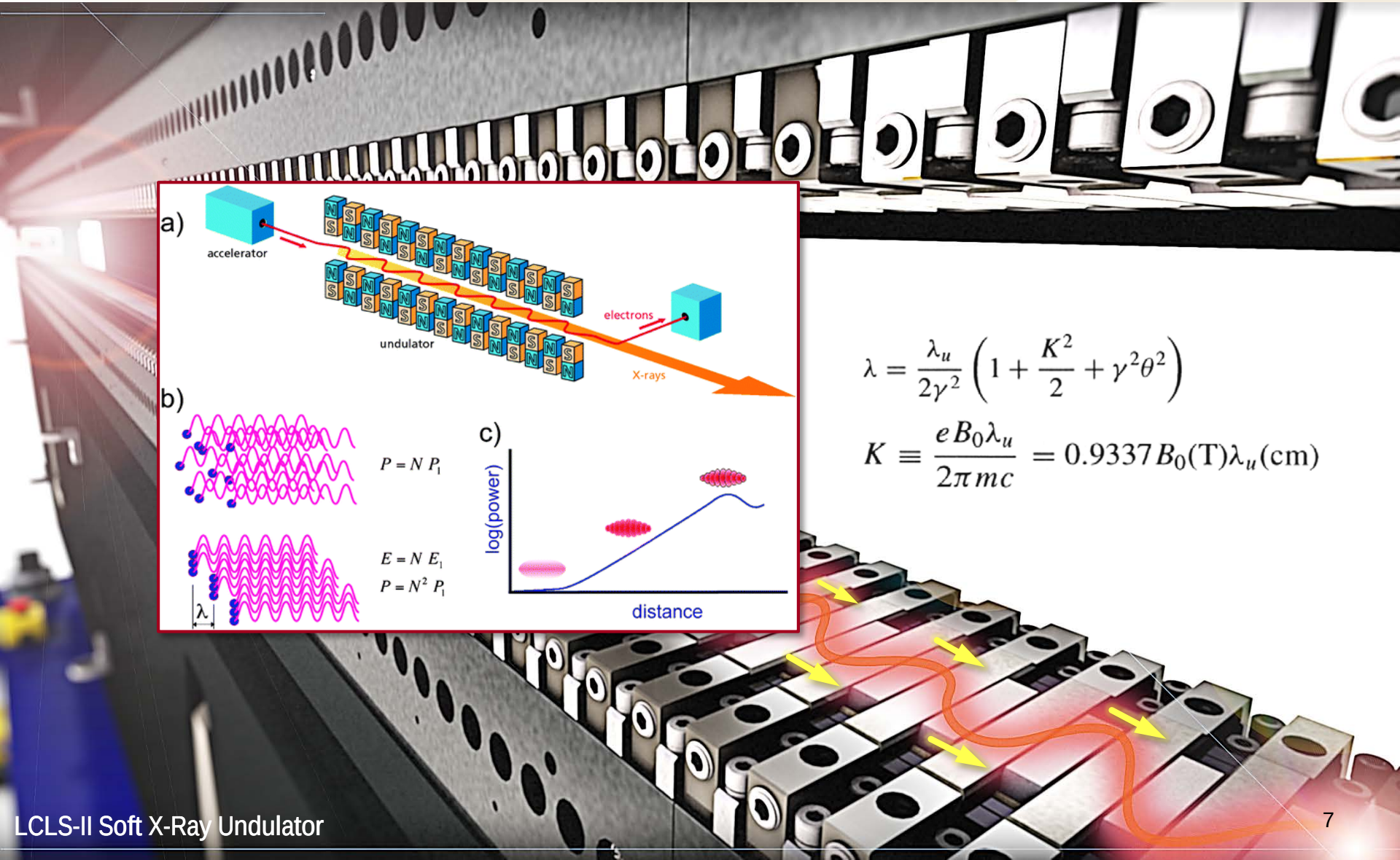

$$\lambda = \frac{\lambda_u}{2\gamma^2}\left(1 + \frac{K^2}{2} + \gamma^2\theta^2\right)$$

$$K \equiv \frac{e B_0 \lambda_u}{2\pi mc} = 0.9337 B_0(\mathrm{T})\lambda_u(\mathrm{cm})$$

LCLS-II 4 GeV Superconducting Linac Layout

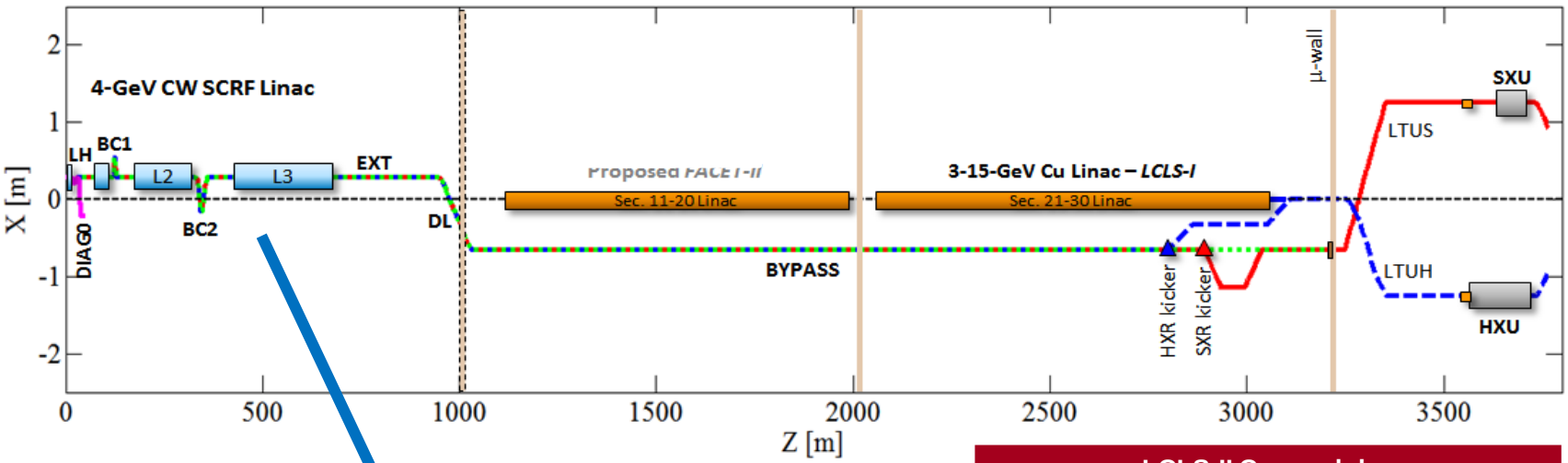

LCLS-II Cyomodules	
Build:	Install:
40 each 1.3 GHz CM	**35** each 1.3 GHz CM
3 each 3.9 GHz CM	**2** each 3.9 GHz CM

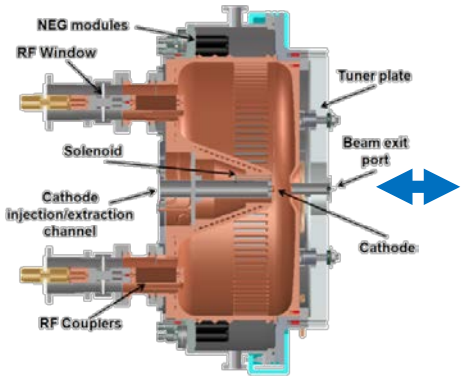

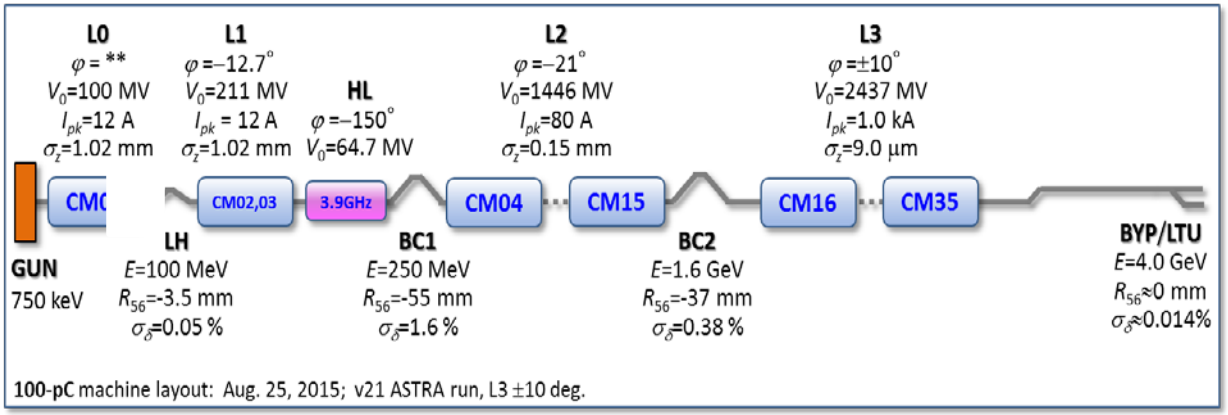

LCLS-II Injector (VHF: 186 MHz, Continuous Operation)

0.7 MeV Gun, Cs_2Te Cathode, 258 nm UV Laser, 1.3 GHz Buncher

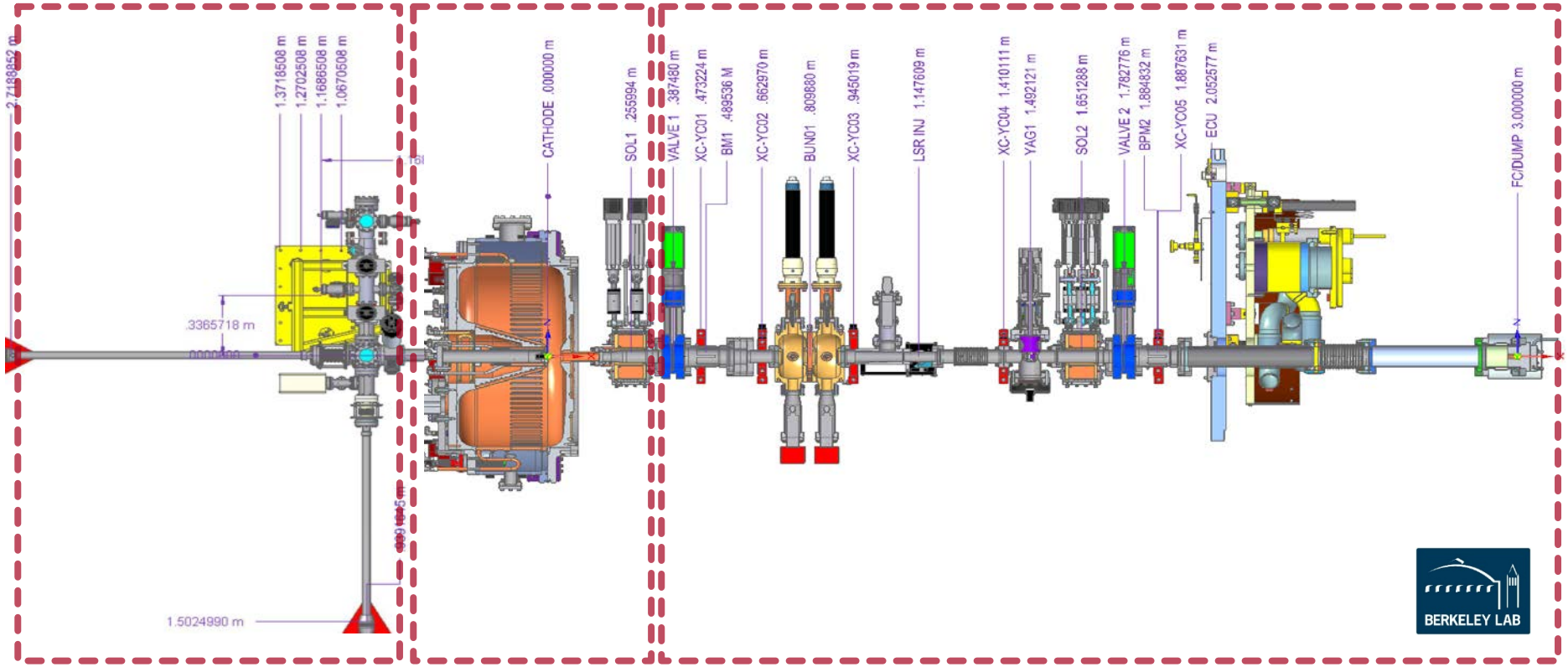

Cathode Loadlock VHF Gun LEBT

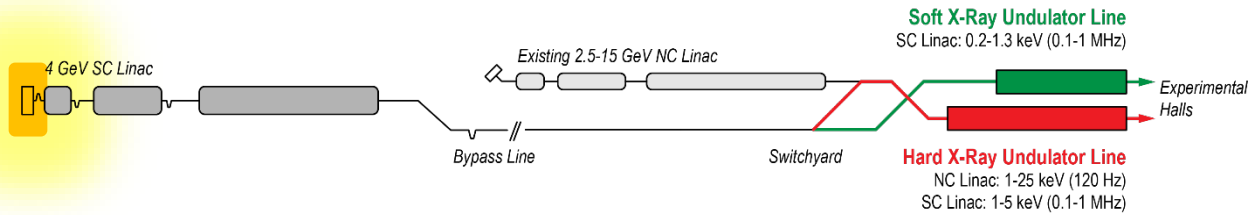

LCLS-II Injector

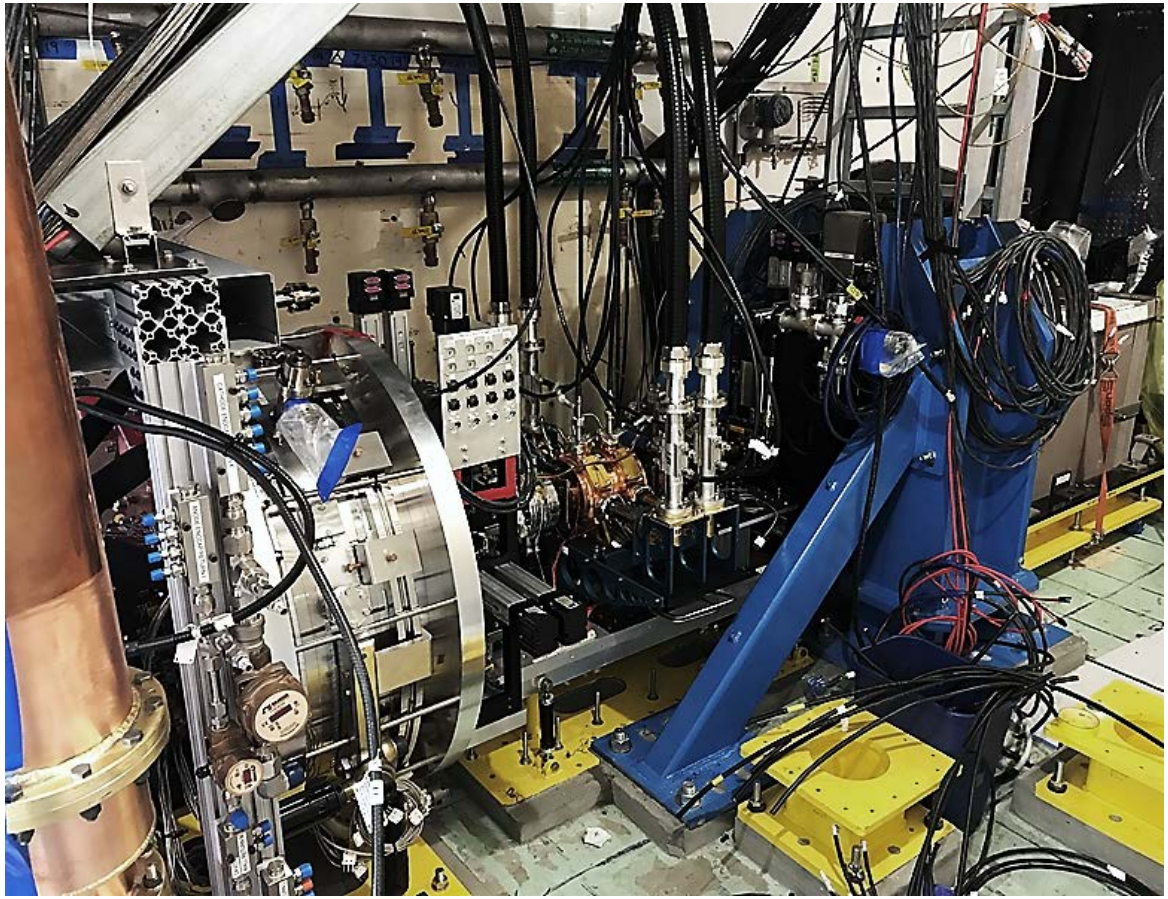

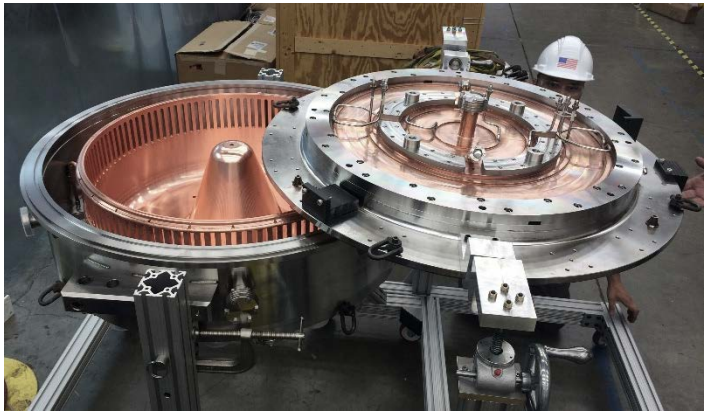

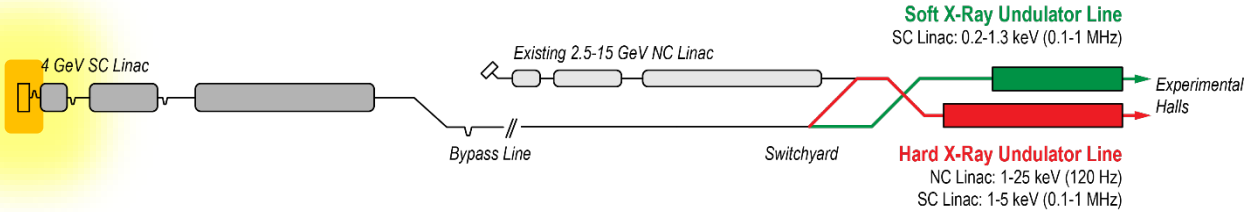

LCLS-II 4 GeV Superconducting Linac

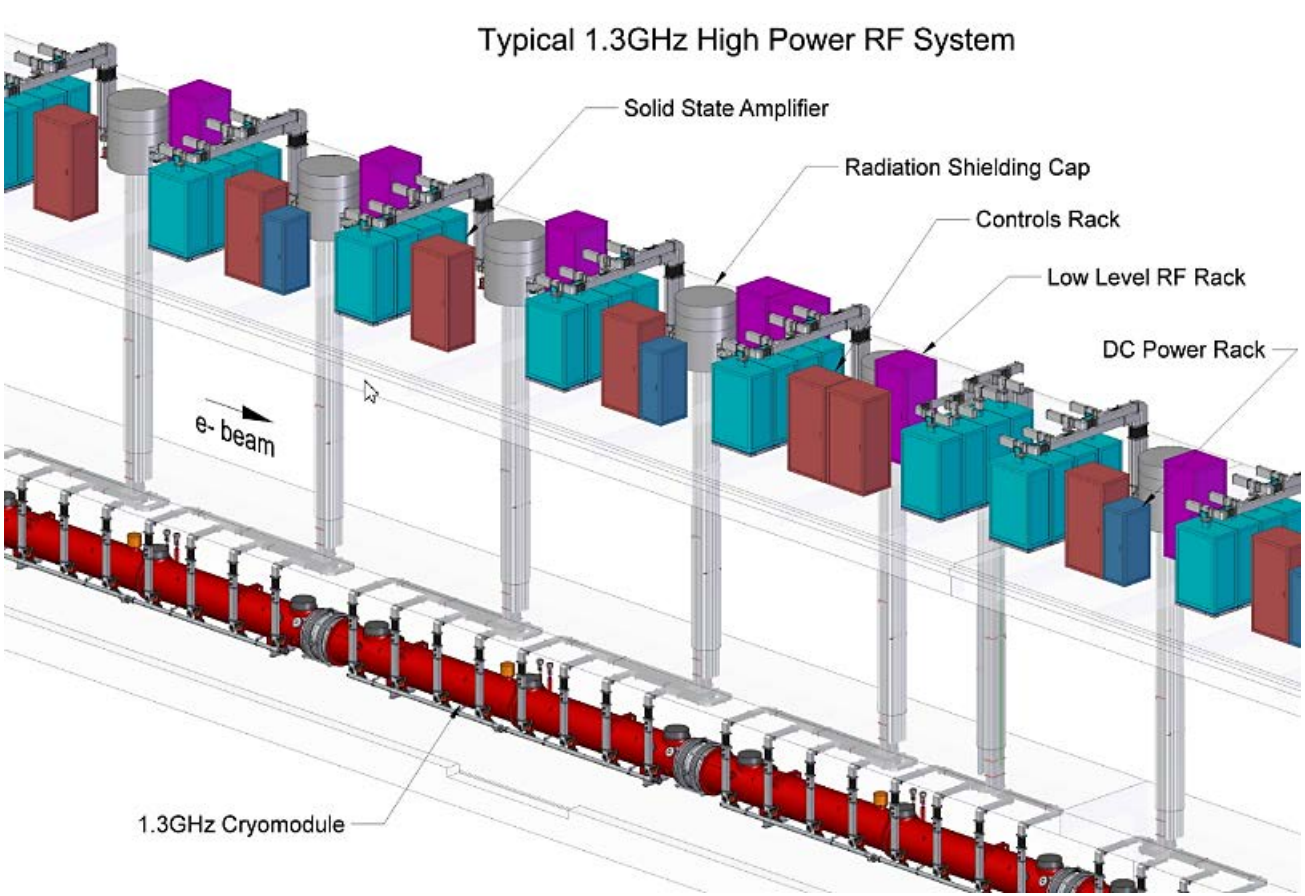

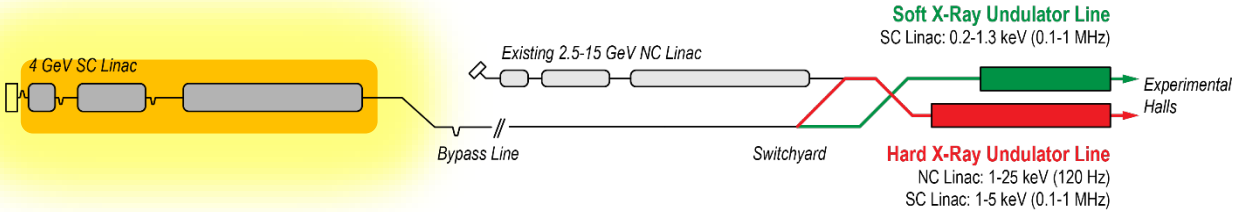

LCLS-II 4 GeV Superconducting Linac Cryomodule

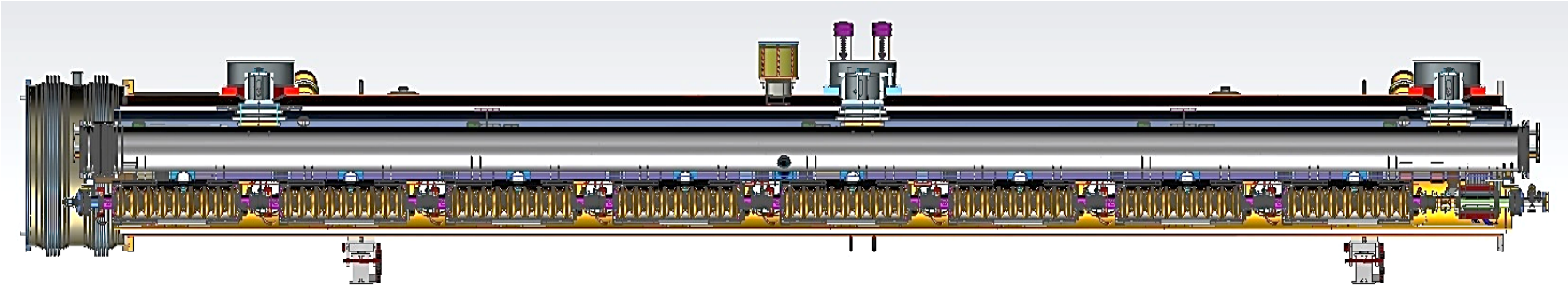

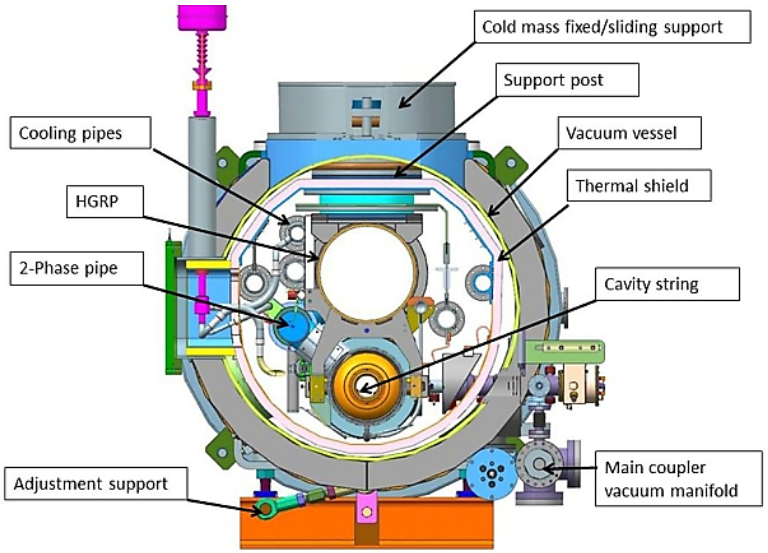

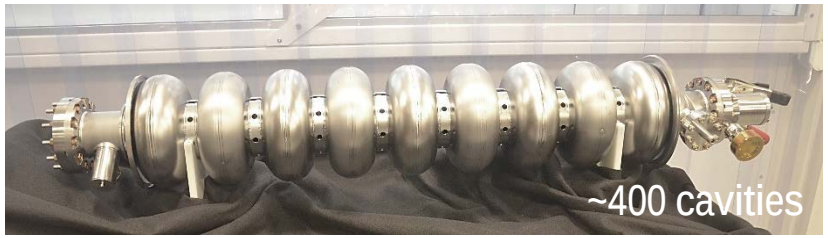

- Installation of 35 – 1.3 GHz cryomodules
  - Avg. $Q_0 \geq 2.7e10$
  - Avg. Energy gain ≥ 133 MV (Cavity Avg. 16 MV/m)
- Installation of 2 – 3.9 GHz cryomodules
  - Avg. $Q_0 \geq 2.0e9$
  - Avg. operating gradient ≥ 13.4 MV/m

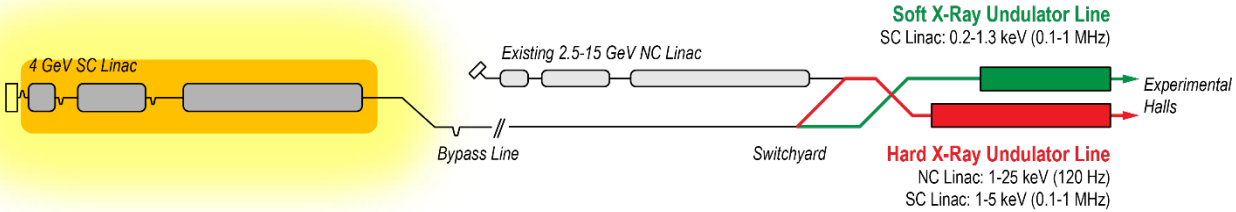

LCLS-II 4 GeV Superconducting Linac Cryomodule

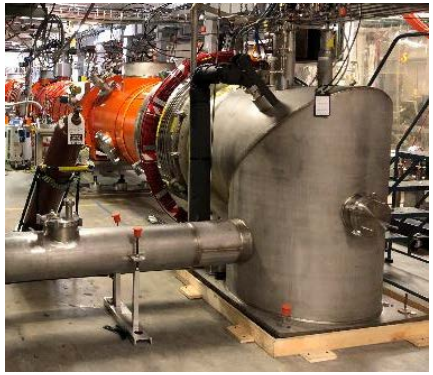

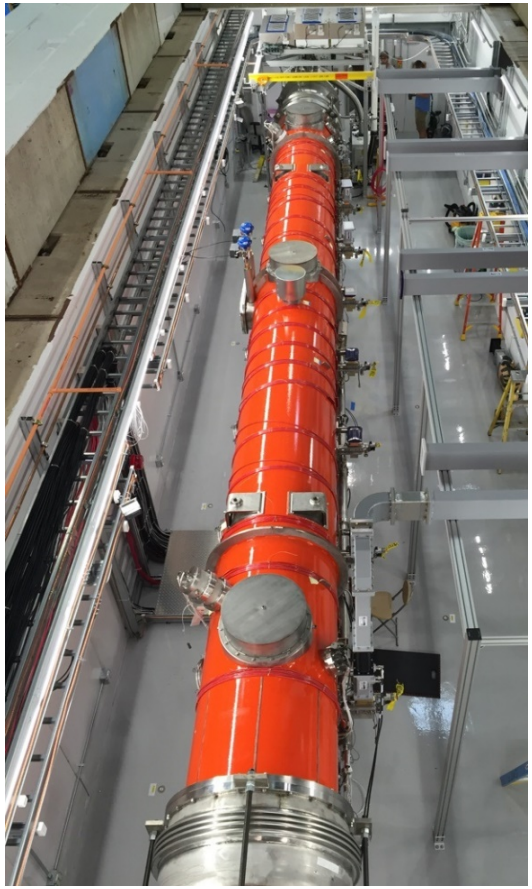

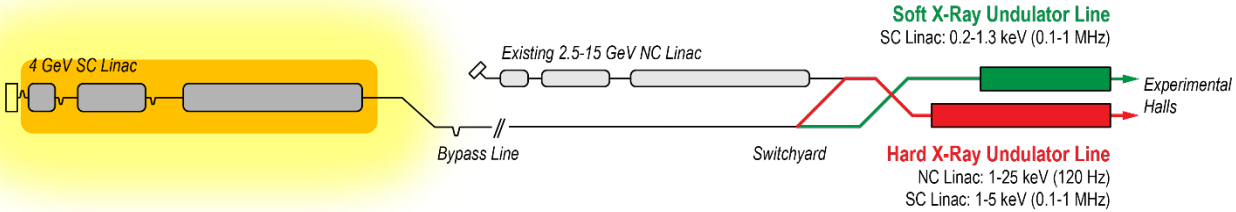

LCLS-II Cryoplant

Refrigeration Capacity: 2 x 4 kW @ 2 K, 2 x 1.3 kW @ 5-8 K, 2 x 15.2 kW @ 40-80K

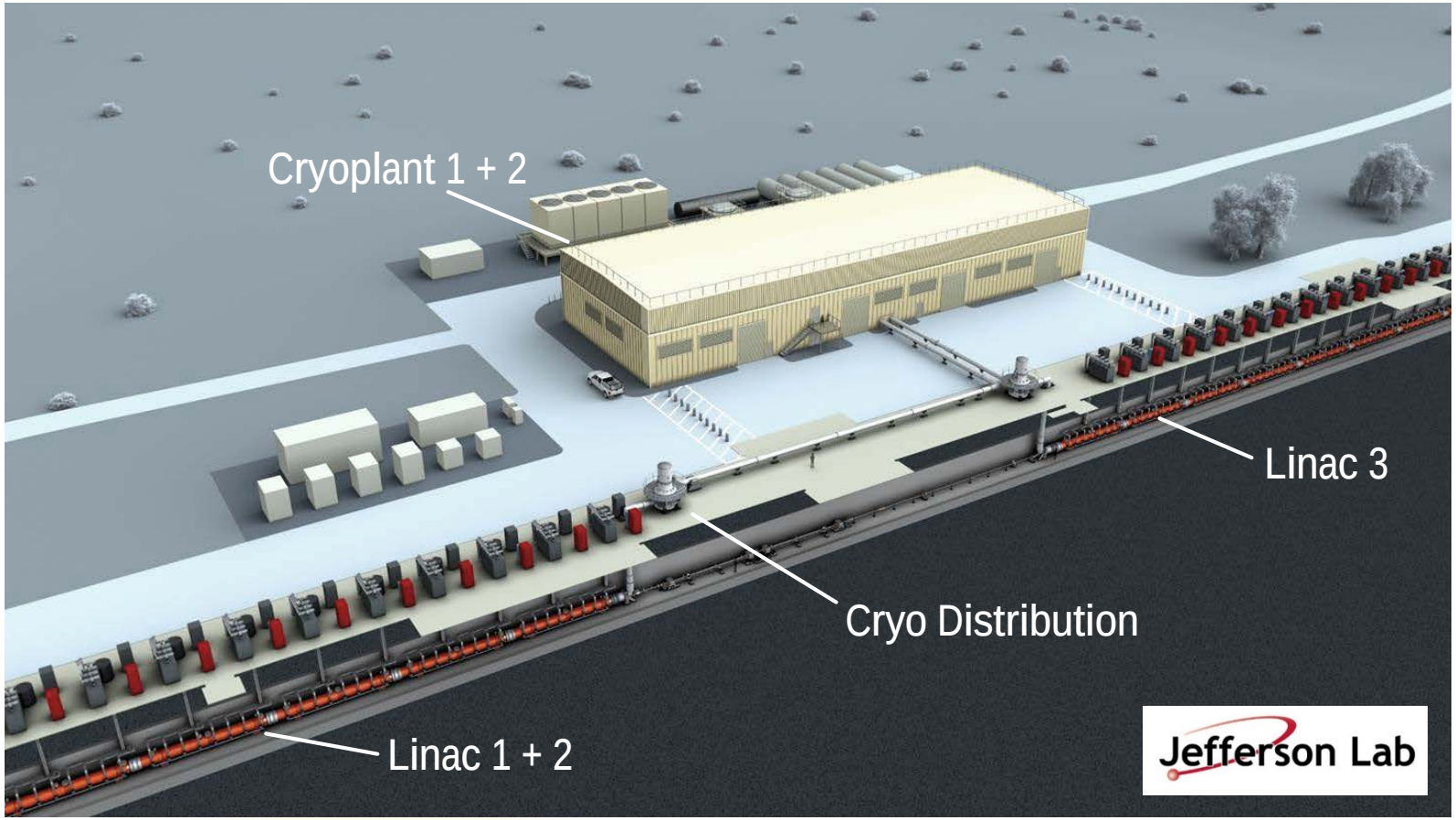

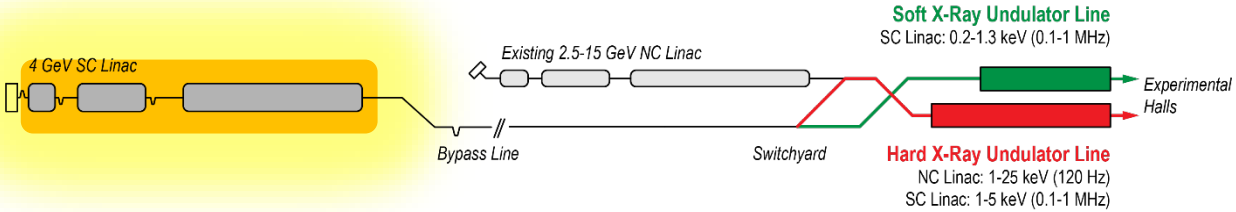

LCLS-II Cryoplant

Refrigeration Capacity: 2 x 4 kW @ 2 K, 2 x 1.3 kW @ 5-8 K, 2 x 15.2 kW @ 40-80K

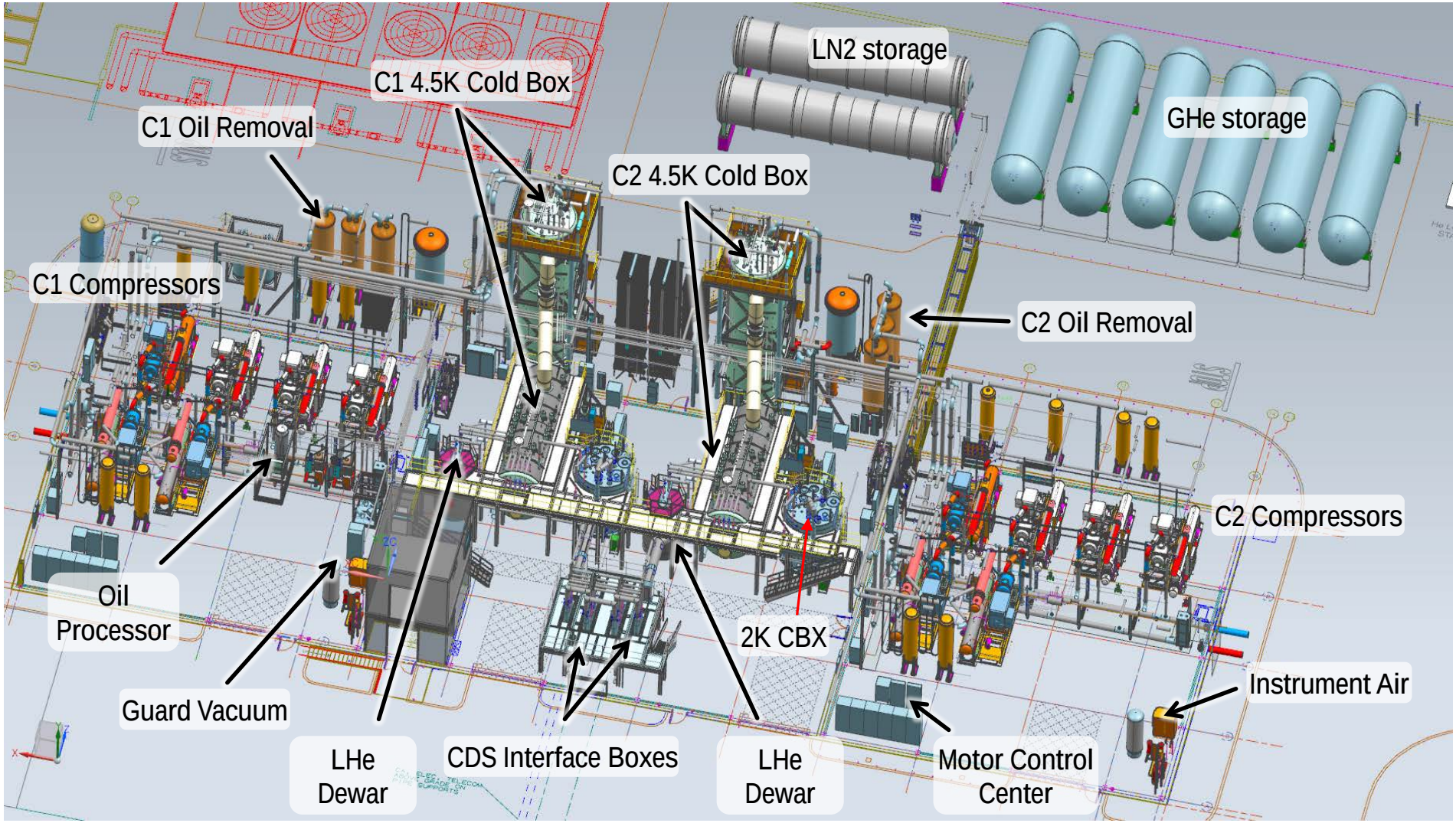

LCLS-II Transport Lines And Undulator Hall

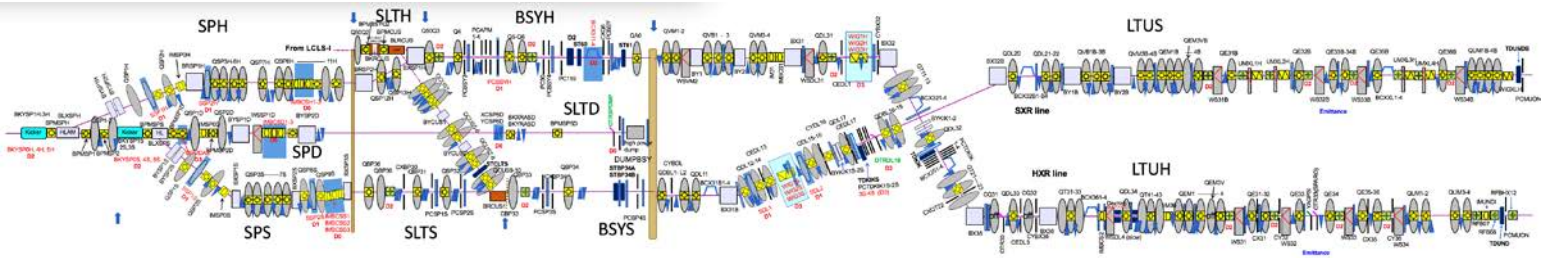

Transfer Line Hall

Undulator Hall With SXR

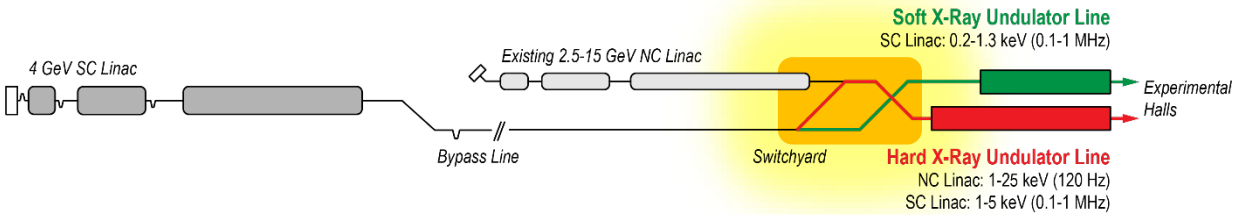

LBNL Supplies 21 Soft X-Ray And 32 Hard X-Ray Production Undulator Segments To LCLS-II

Production also includes : 1 spare SXR undulator, 1 spare HGVPU undulator

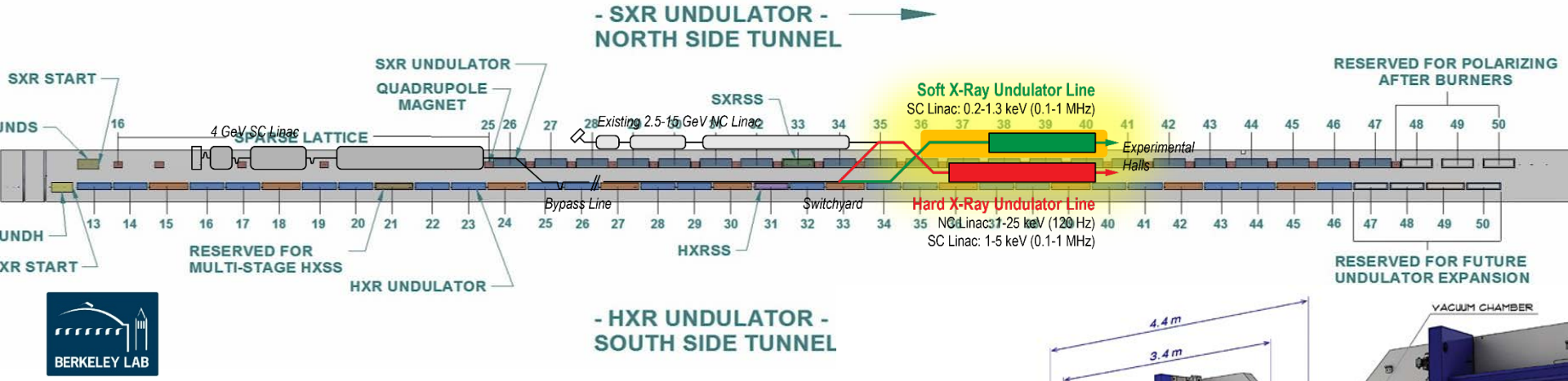

- **Soft X-Ray Line**
  - 21 Undulators + 1 spare
  - Horizontally Polarizing
  - Total Cost ~$19M
  - Production: Mar. 2016 To Feb. 2019

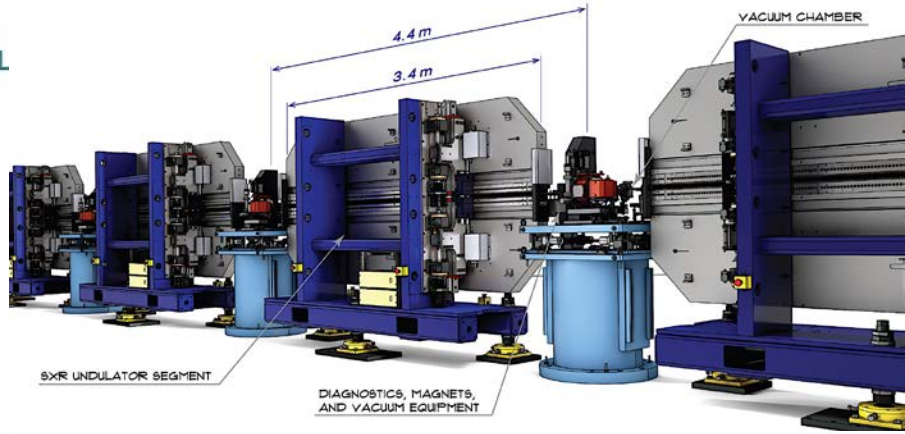

- **Hard X-Ray Line**
  - 32 Undulators + 1 spare
  - Vertically Polarizing
  - Total Cost ~$21M
  - Production: Aug. 2016 To Sept. 2019

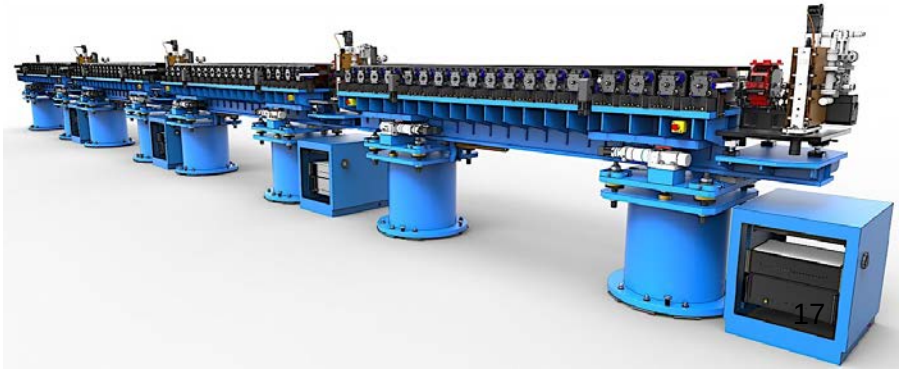

Main LCLS-II Undulator Segment Parameters

Parameter	Soft X-Ray Line (SXR)	Hard X-Ray Line (HXR)
Undulator Type	Planar PM Hybrid	Planar PM Hybrid
Magnet Material	NdFeB (Diffusion Treated)	NdFeB (Diffusion Treated)
Gap Type	Variable	Variable
X-Ray Polarization Direction	Horizontal	Vertical
Photon Energy Range	0.2 – 1.3 keV (SC Linac)	1.0 – 5.0 keV (SC Linac)
Undulator Period Length (λ_u)	39 mm	26 mm
Minimum Operational Magnet Gap	7.2 mm	7.2 mm
Maximum Operational Magnetic Gap	22 mm	20 mm
On-Axis Vertical Eff. Field B_{eff} at Min. Operational Gap	> 1.49 T	> 1.01 T
Undulator Parameter K_{eff} at Min. Operational Gap	> 5.43	> 2.44
Minimum Operational Undulator Parameter K	1.24	0.44
Minimum Full Open Gap	100 mm	100 mm
Individual Undulator Segment Length	3.4 m	3.4 m
Magnetic Field Symmetry	Anti-Symmetric	Anti-Symmetric
Number of Periods per Segment (incl. Undulator Ends)	87	130
Number of Poles per Segment (incl. Undulator Ends)	174	260
Number of Magnets per Segment (incl. Ends)	173	259

LBNL Supplies Soft X-Ray Production Undulator Segments (21 + 1 Spare Units) to LCLS-II

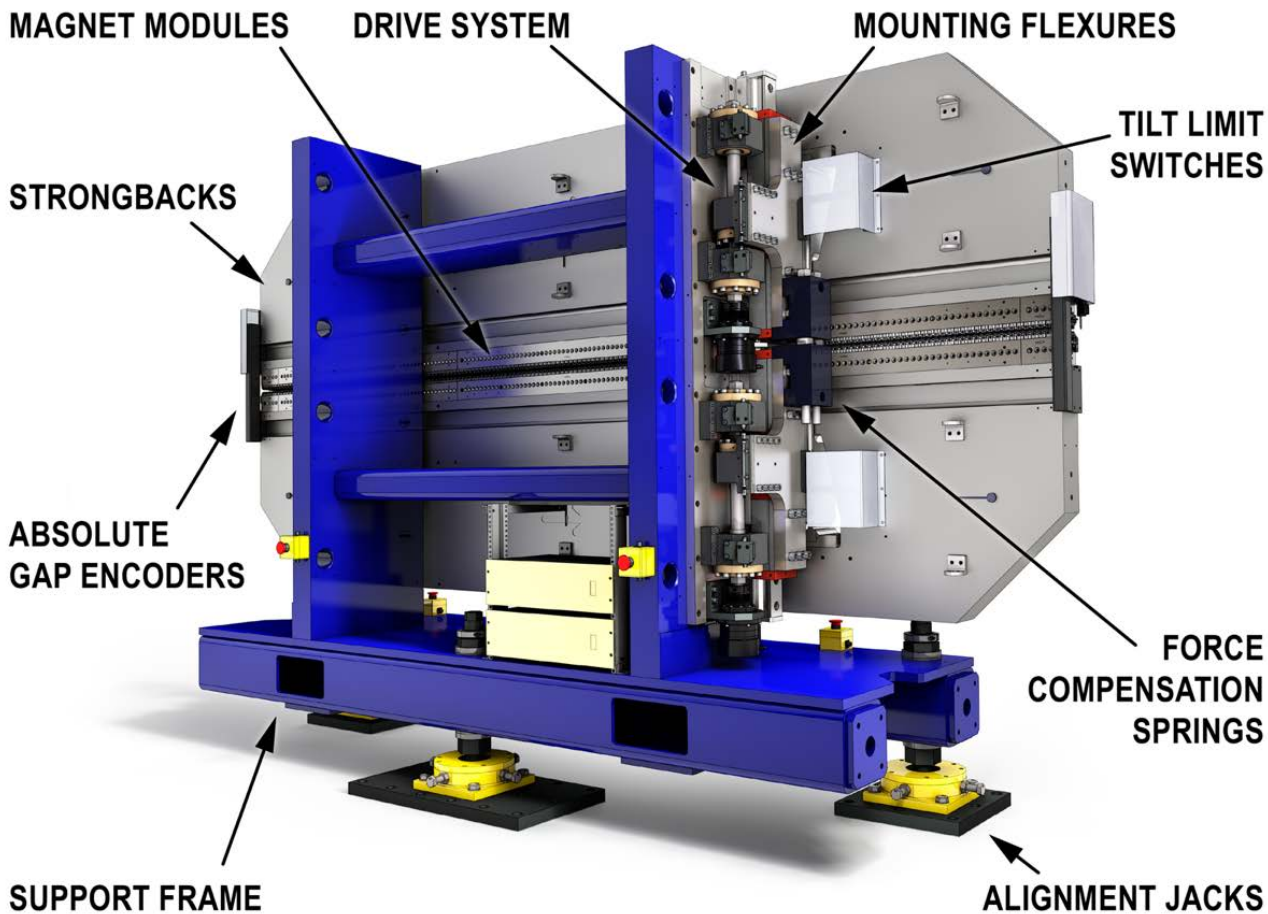

Magnet Module Vendor

VAC® VACUUMSCHMELZE

Mechanical Systems and Integration Vendor

KTC

LCLS-II Undulators Incorporate Advanced Magnet Module Error Correction Features: Rapid Undulator Tuning

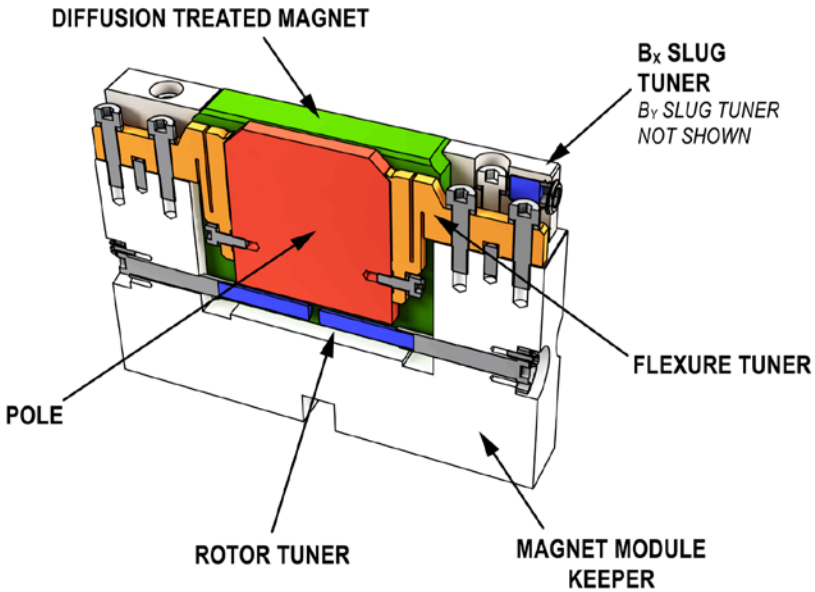

SXR Magnet Module

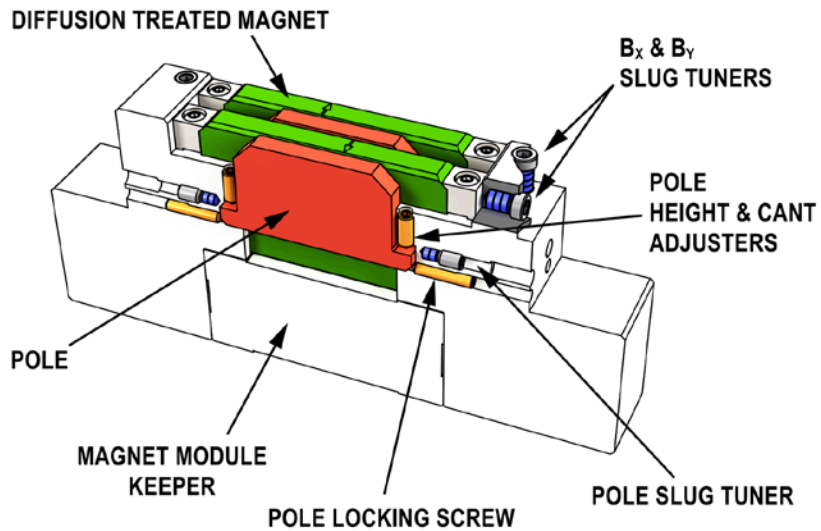

HGVPU Magnet Module

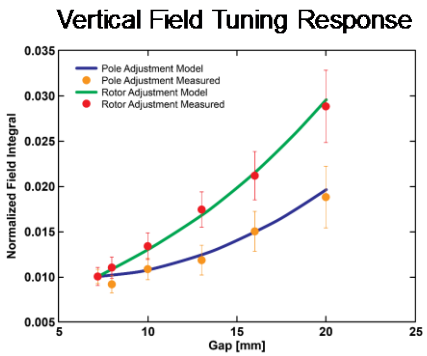

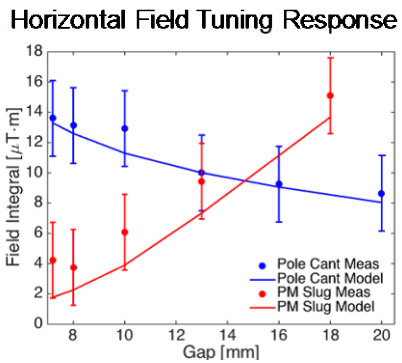

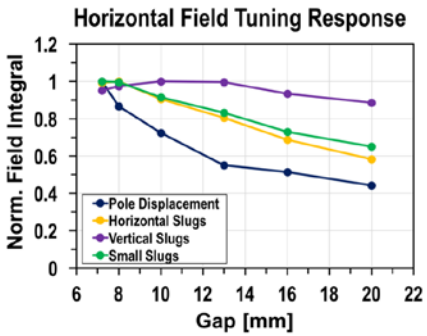

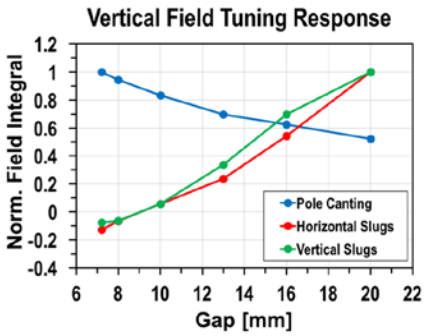

Magnet Vendor Provides Complete Magnet Module Assemblies: Stringent Pole Flexure Assembly And Alignment Processes Developed

Verification and Testing Requirements

ITEM NO.	REQ ID or DCC doc #	CHARACTERISTIC OR TEST TO BE CONDUCTED, VERIFIED or WITNESSED	VERIFYING ENTITY	Indicate VP Revision used during inspection. Signature of VERIFIER / NonConformance Report # if NCR exists	PASS / FAIL DATE	
9.	26M603	VERIFY MECHANICAL INSPECTION REPORT FOR COMPLIANCE TO PRINT 26M603 – 4PM END MODULE ASSEMBLY (2 ASSEMBLIES)	LBNL QA K. Ray	VP Rev #: A NCR #: 0086-NCR-VAC-7088185	PASS ☒ FAIL ☐ DATE: 5/1/15	INTIALS KLR
10.	26M598	VERIFY MECHANICAL INSPECTION REPORTS FOR COMPLIANCE TO PRINT 26M598 – 3PM END MODULE ASSEMBLY (2 ASSEMBLIES)	LBNL QA K. Ray	VP Rev #: A NCR #: 0086-NCR-VAC-7088185	PASS ☒ FAIL ☐ DATE: 5/1/15	INTIALS KLR
11.	26M693	VERIFY MECHANICAL INSPECTION REPORTS FOR COMPLIANCE TO PRINT 26M693 –ROTOR TUNER MAGNET ASSEMBLY (200 ASSEMBLIES)	LBNL QA K. Ray	VP Rev #: A NCR #: 0064-NCR-VAC-7088185 0064-DEV-VAC-7088185	PASS ☒ FAIL ☐ DATE: 5/1/15	INTIALS KLR
12.	26M530	VERIFY MECHANICAL INSPECTION REPORTS FOR COMPLIANCE TO PRINT 26M530 – PERIODIC KEEPER	LBNL QA K. Ray	VP Rev #: A NCR #: 0001-DEV, 0004-DEV, 0037-DEV, 0039-DEV, 0040-DEV	PASS ☒ FAIL ☐ DATE: 5/1/15	INTIALS KLR
13.	26M586	VERIFY MECHANICAL INSPECTION REPORTS FOR COMPLIANCE TO PRINT 26M586 – 4PM END MODULE KEEPER	LBNL QA K. Ray	VP Rev #: A NCR #: none	PASS ☒ FAIL ☐ DATE: 5/1/15	INTIALS KLR
14.	26M584	VERIFY MECHANICAL INSPECTION REPORTS FOR COMPLIANCE TO PRINT 26M584 – 3PM END MODULE KEEPER	LBNL QA K. Ray	VP Rev #: A NCR #: 0045-DEV-VAC-7088185	PASS ☒ FAIL ☐ DATE: 5/1/15	INTIALS KLR
15	26M502	VERIFY MECHANICAL INSPECTION REPORTS FOR MAGNETS INTEGRATED INTO MODULES FOR	LBNL QA	VP Rev #: A NCR #: none	PASS ☒ FAIL ☐ DATE: 5/1/15	INTIALS KLR
1	26M589	26M588, 26M589		Rev #: A NCR #: 0086-NCR-VAC-7088185	PASS ☒ FAIL ☐ DATE: 5/1/15	INTIALS KLR

Use continuation sheet if needed.

LBNL Acceptance Documentation

Lawrence Berkeley National Laboratory

LCLS-II

Work Instructions (WI)

SXR Magnet Module Assembly Work Instructions (WI)

LBNL LCLS-II SXR-WI-29A663-E

Windchill Unique ID: LC-1000-2914

Issued 19 January 2017

Prepared by — 1/17/17 — Work Instructions Originator

Reviewed by — 1/17/2017 — QA Manager

Approved by — 1-19-2017 — Technical Lead

Concurred — 1/19/2017 — CAM

Lawrence Berkeley National Laboratory – 1 Cyclotron Road, Berkeley, California 94720

LBNL Template # LC-1000-3802 Rev A.4

LBNL Pole Height Adjustment Example: Initial Measurement

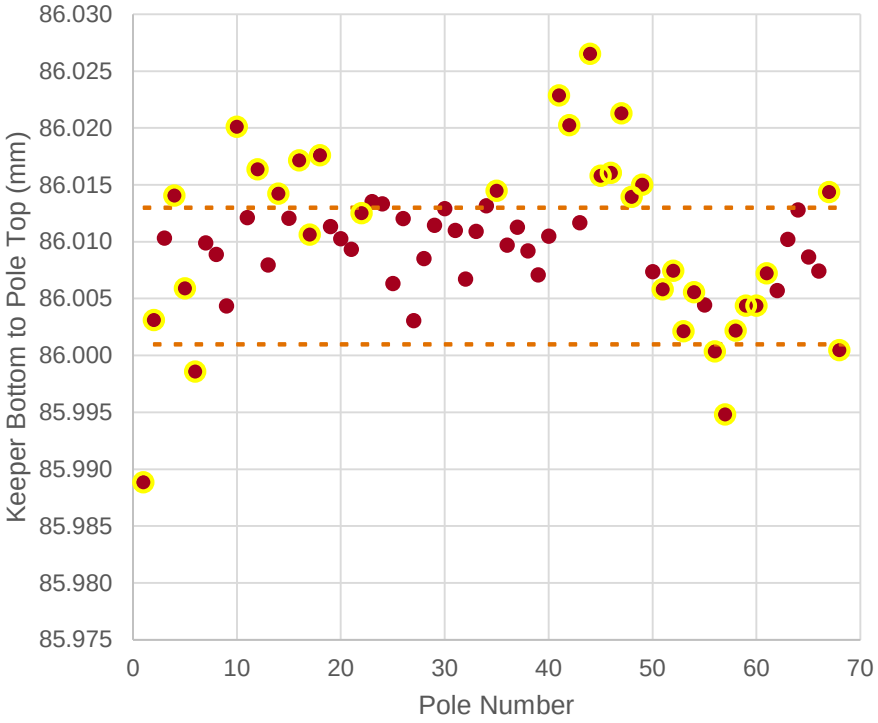

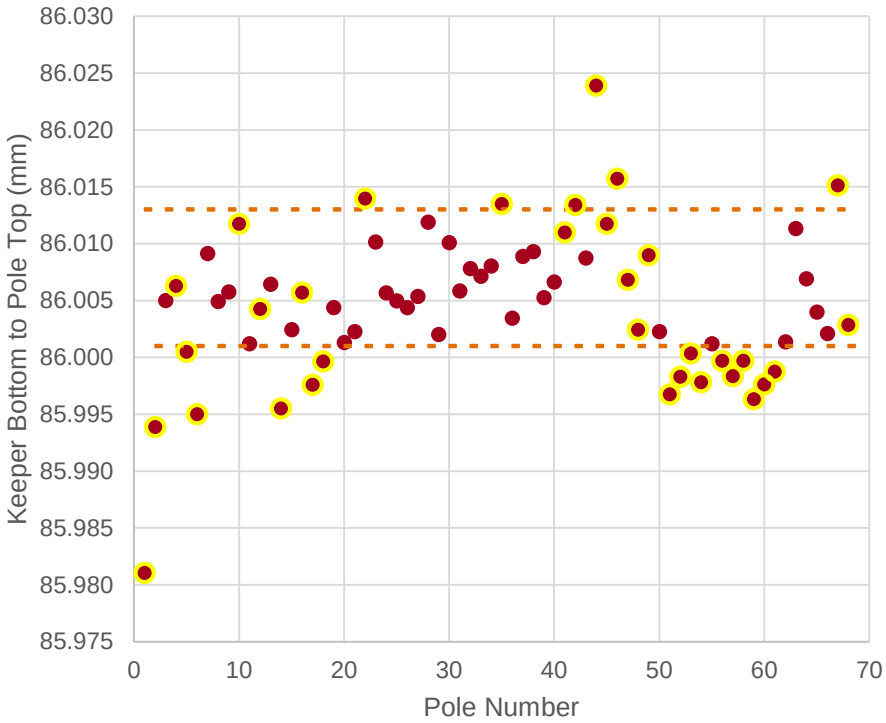

±6 µm lines around 86.007 mm
3σ for both sides: 18.0 µm
Yellow bordered poles were marked for adjustment

Poles Are Adjusted Relative To Their Measured Position

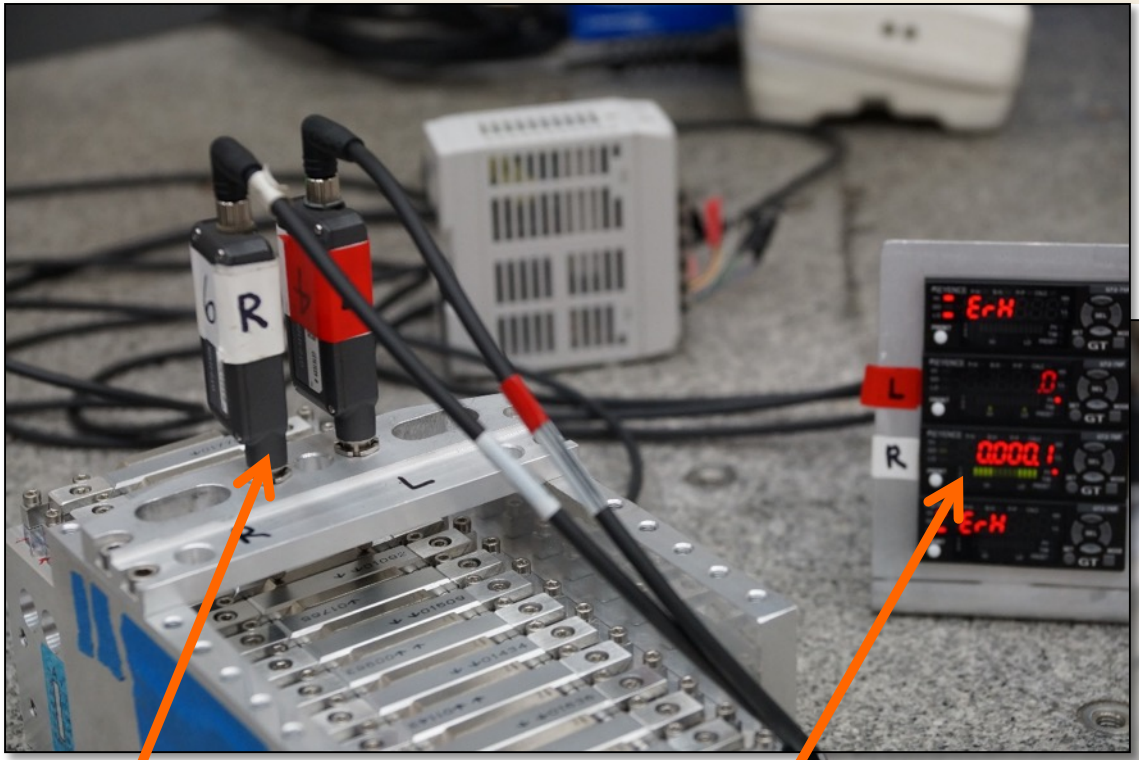

- Mount position sensors
- Set readout to zero
- Adjust the prescribed amount

Torque Wrench

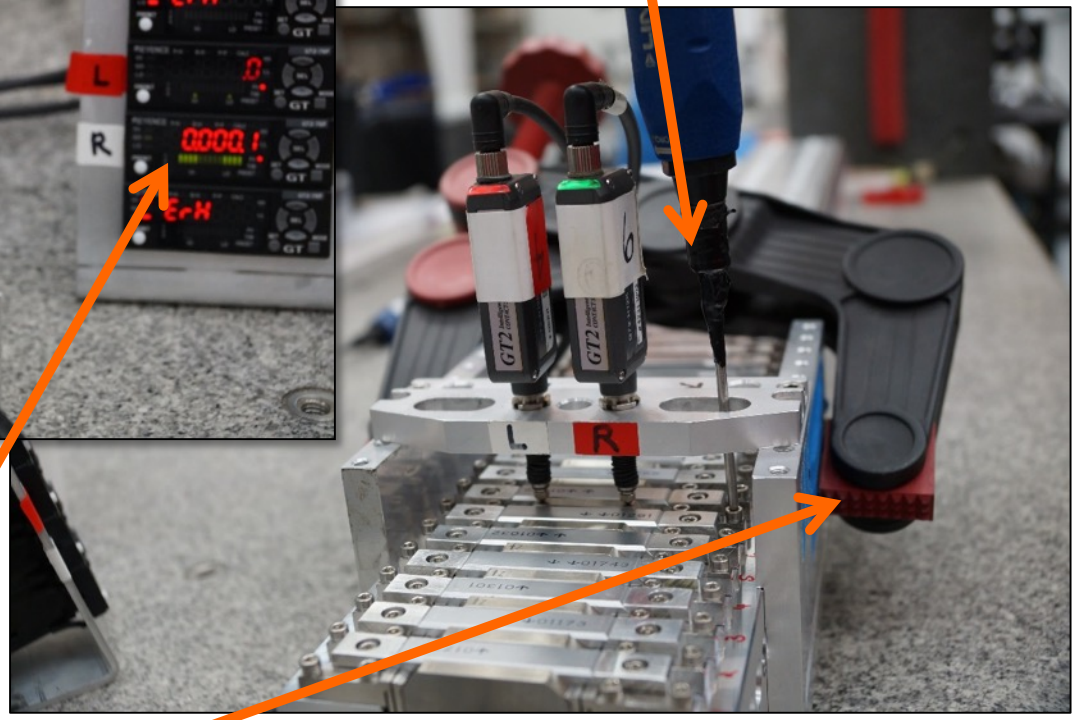

Keyence Contact Sensors With 0.1µm Resolution

Keyence Readout

Sensor Mount Clamp

LBNL Pole Height Adjustment Example: Measurement After Pole Adjustment

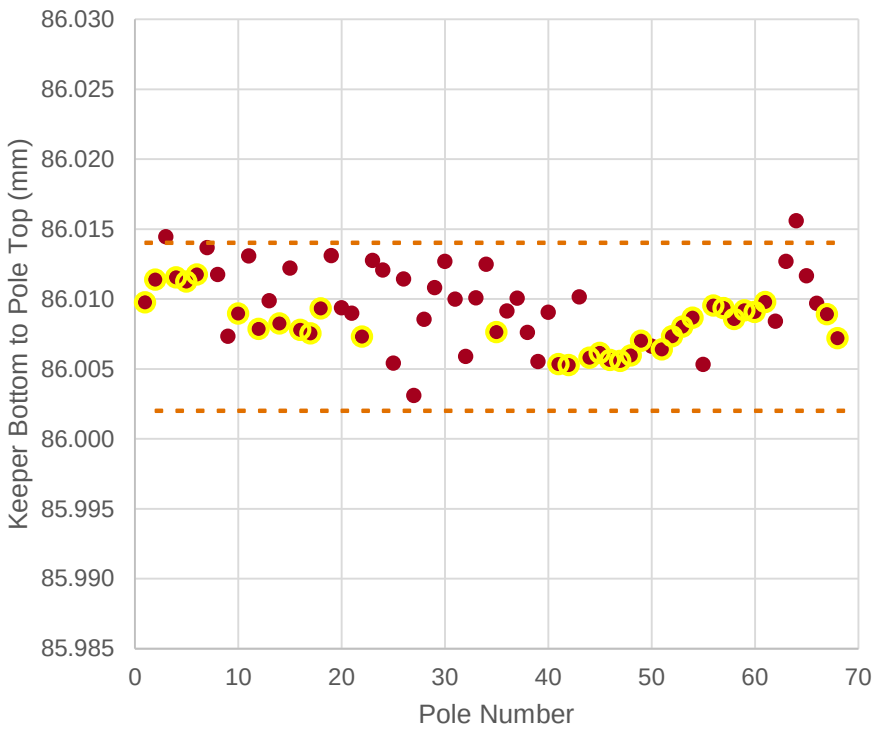

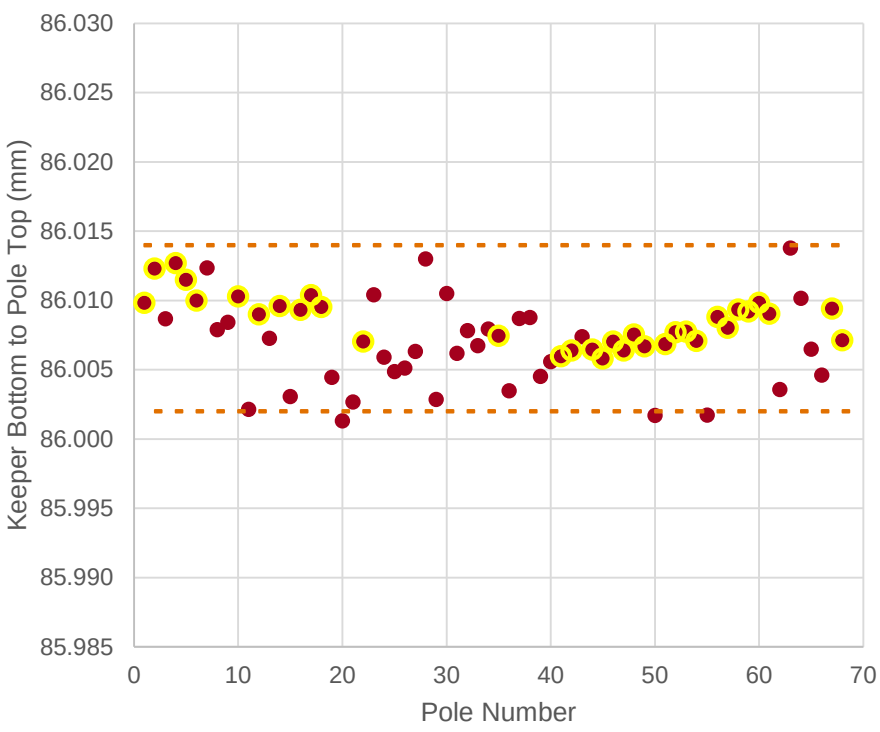

±6 µm lines around 86.008 mm
3σ for both sides: 8.5 µm
Yellow bordered poles were adjusted

After Successful Pole Height Adjustment Magnet Modules Are Mounted On Strongbacks

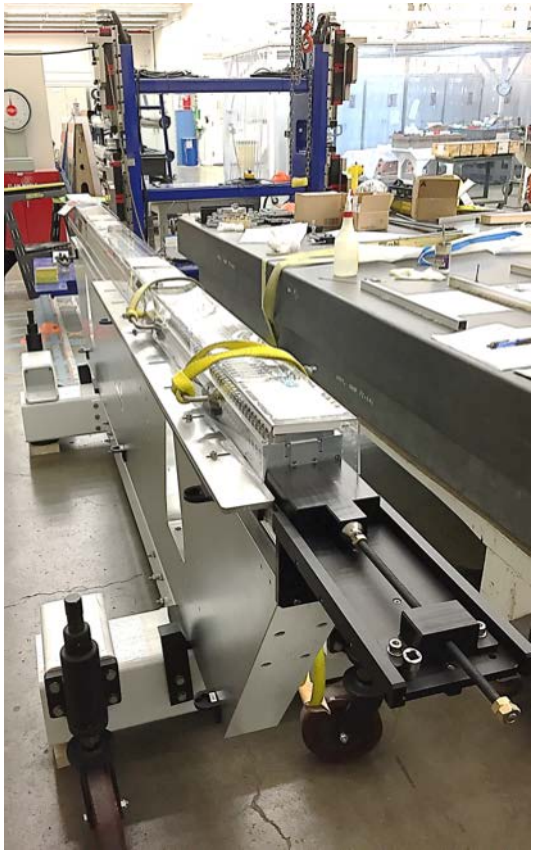

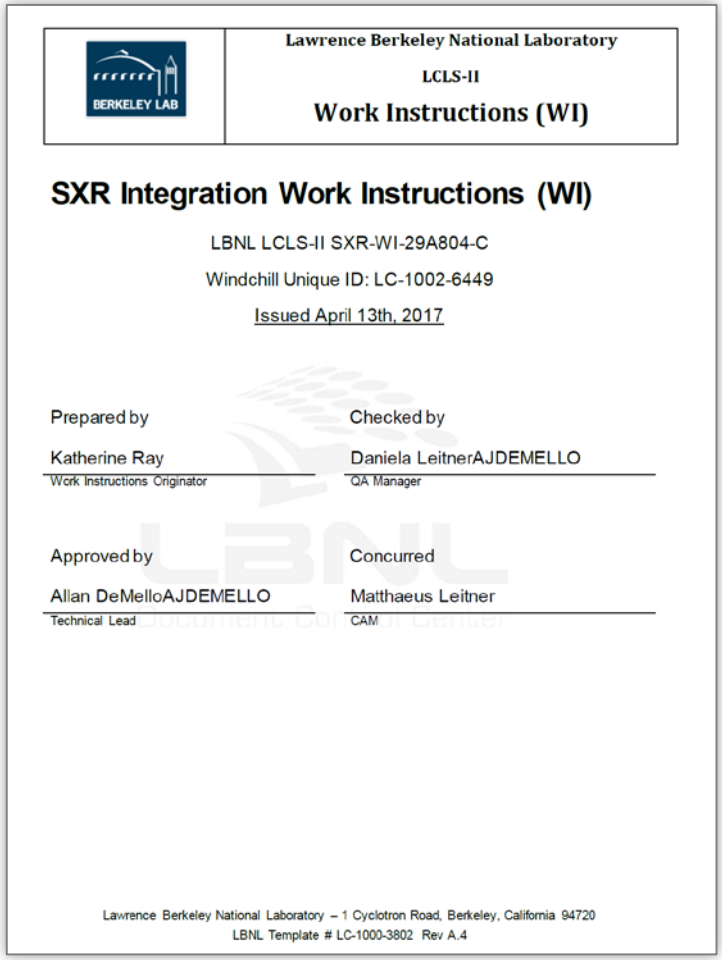

Lawrence Berkeley National Laboratory

LCLS-II

Work Instructions (WI)

SXR Integration Work Instructions (WI)

LBNL LCLS-II SXR-WI-29A804-C

Windchill Unique ID: LC-1002-6449

Issued April 13th, 2017

Prepared by	Checked by
Katherine Ray	Daniela LeitnerAJDEMELLO
Work Instructions Originator	QA Manager
Approved by	**Concurred**
Allan DeMelloAJDEMELLO	Matthaeus Leitner
Technical Lead	CAM

Lawrence Berkeley National Laboratory – 1 Cyclotron Road, Berkeley, California 94720

LBNL Template # LC-1000-3802 Rev A.4

Undulator Production Fully Commercialized:
Vendor Integrates Magnet Modules, Strongbacks, And Mechanical Systems

Assembly Procedures Developed At LBNL
Work Instructions Transferred To Vendor

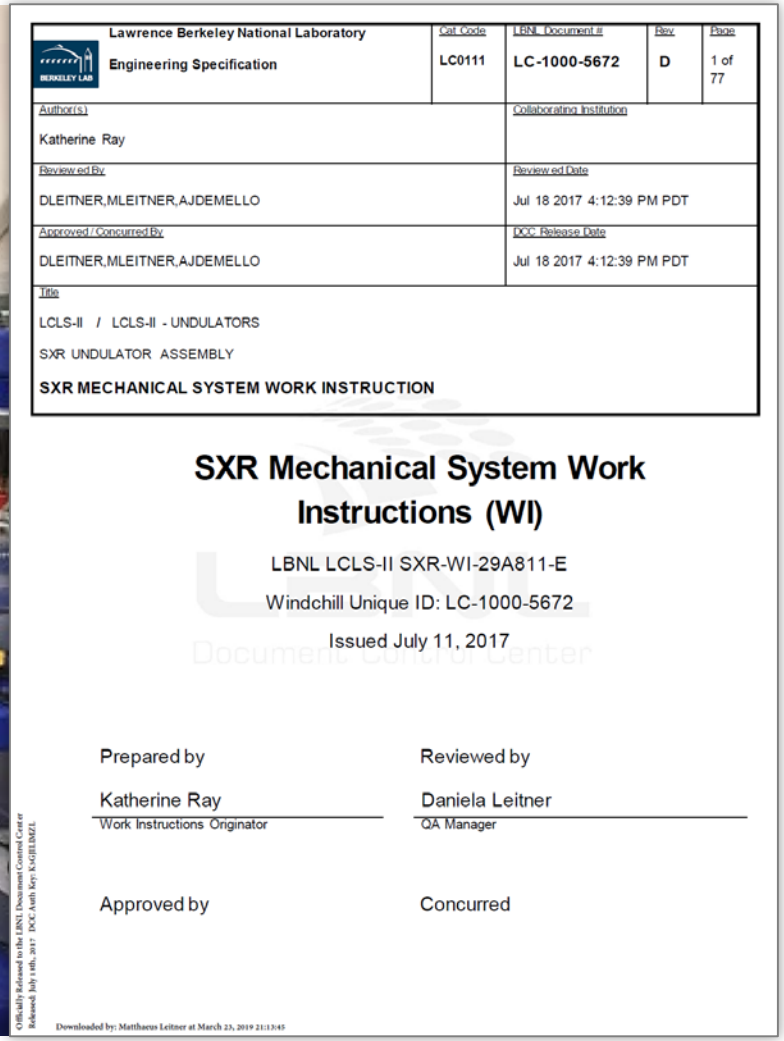

Lawrence Berkeley National Laboratory Engineering Specification	Cat Code LC0111	LBNL Document # LC-1000-5672	Rev D	Page 1 of 77
Author(s) Katherine Ray		Collaborating Institution		
Reviewed By DLEITNER,MLEITNER,AJDEMELLO		Reviewed Date Jul 18 2017 4:12:39 PM PDT		
Approved / Concurred By DLEITNER,MLEITNER,AJDEMELLO		DCC Release Date Jul 18 2017 4:12:39 PM PDT		
Title LCLS-II / LCLS-II - UNDULATORS SXR UNDULATOR ASSEMBLY **SXR MECHANICAL SYSTEM WORK INSTRUCTION**				

SXR Mechanical System Work Instructions (WI)

LBNL LCLS-II SXR-WI-29A811-E

Windchill Unique ID: LC-1000-5672

Issued July 11, 2017

Prepared by — Katherine Ray, Work Instructions Originator

Reviewed by — Daniela Leitner, QA Manager

Approved by

Concurred

Officially Released to the LBNL Document Control Center Released: July 18th, 2017 DCC Auth Key: KAGELMEZL

Downloaded by: Matthaeus Leitner at March 23, 2019 21:13:45

Prototype And Pre-Production Undulators Were Thoroughly Evaluated And Documented: Comprehensive Gap Deflection Testing

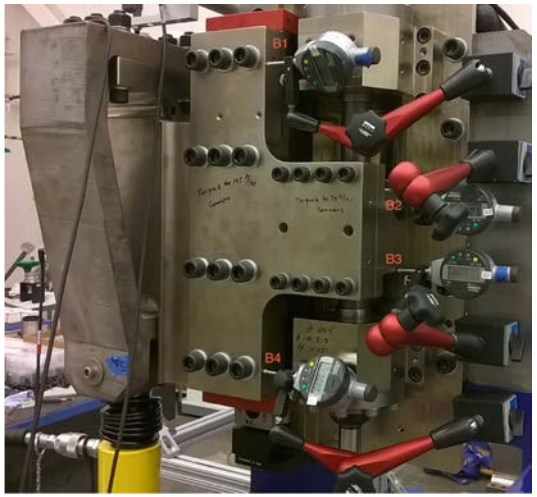

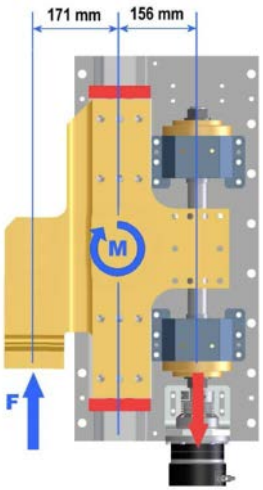

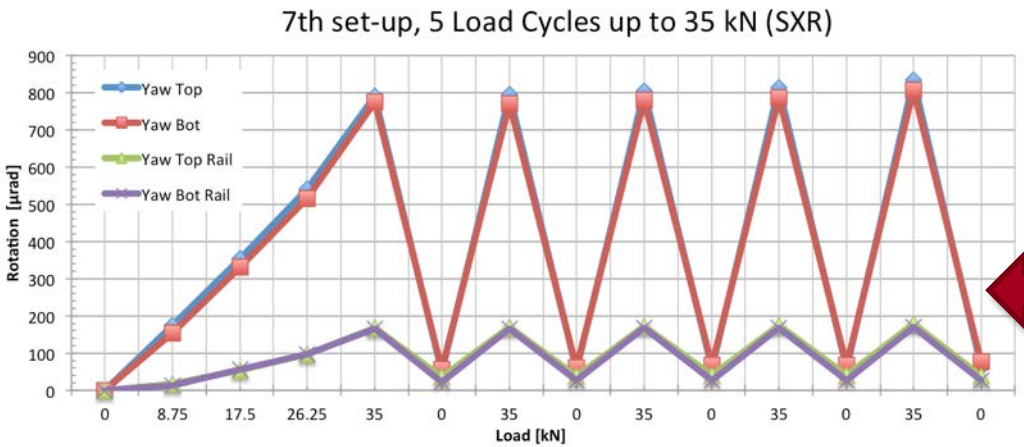

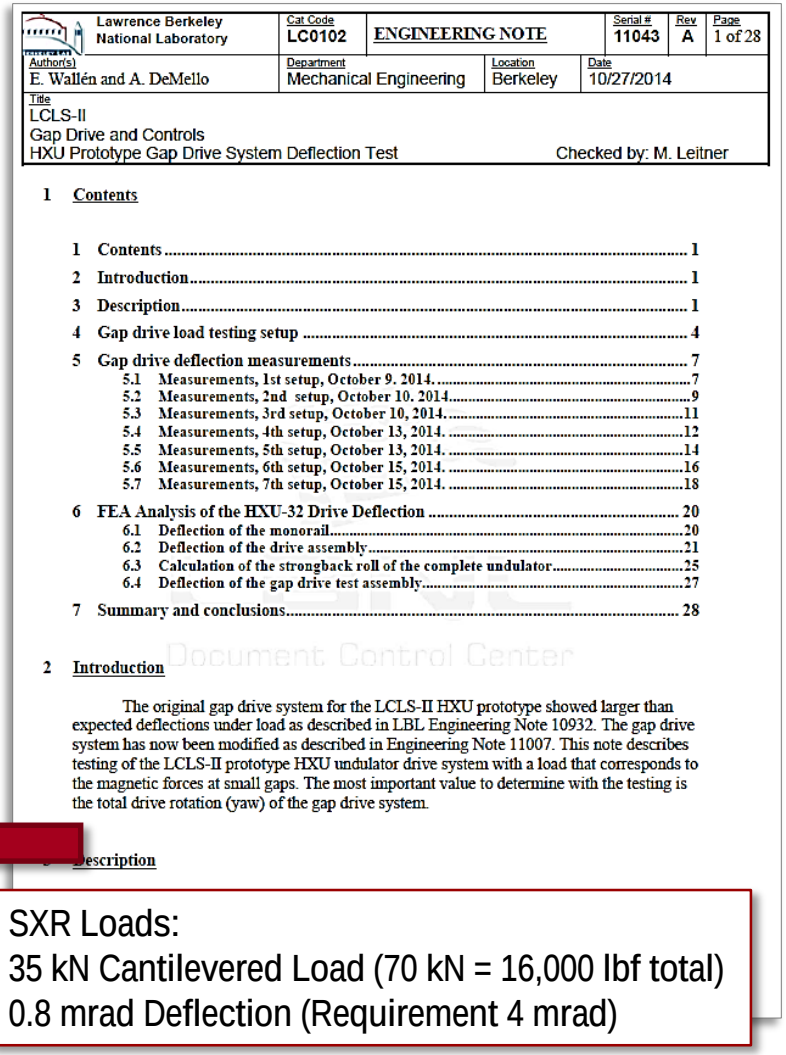

Lawrence Berkeley National Laboratory	Cat Code LC0102	ENGINEERING NOTE	Serial # 11043	Rev A	Page 1 of 28
Author(s) E. Wallén and A. DeMello	Department Mechanical Engineering	Location Berkeley	Date 10/27/2014		
Title LCLS-II Gap Drive and Controls HXU Prototype Gap Drive System Deflection Test			Checked by: M. Leitner		

1 Contents

1 Contents 1
2 Introduction 1
3 Description 1
4 Gap drive load testing setup 4
5 Gap drive deflection measurements 7
5.1 Measurements, 1st setup, October 9. 2014. 7
5.2 Measurements, 2nd setup, October 10. 2014. 9
5.3 Measurements, 3rd setup, October 10, 2014. 11
5.4 Measurements, 4th setup, October 13, 2014. 12
5.5 Measurements, 5th setup, October 13, 2014. 14
5.6 Measurements, 6th setup, October 15, 2014. 16
5.7 Measurements, 7th setup, October 15, 2014. 18
6 FEA Analysis of the HXU-32 Drive Deflection 20
6.1 Deflection of the monorail 20
6.2 Deflection of the drive assembly 21
6.3 Calculation of the strongback roll of the complete undulator 25
6.4 Deflection of the gap drive test assembly 27
7 Summary and conclusions 28

2 Introduction

The original gap drive system for the LCLS-II HXU prototype showed larger than expected deflections under load as described in LBL Engineering Note 10932. The gap drive system has now been modified as described in Engineering Note 11007. This note describes testing of the LCLS-II prototype HXU undulator drive system with a load that corresponds to the magnetic forces at small gaps. The most important value to determine with the testing is the total drive rotation (yaw) of the gap drive system.

3 Description

SXR Loads:
35 kN Cantilevered Load (70 kN = 16,000 lbf total)
0.8 mrad Deflection (Requirement 4 mrad)

Simulations Correctly Predict Experimental Results: Confidence In Robust Undulator Design

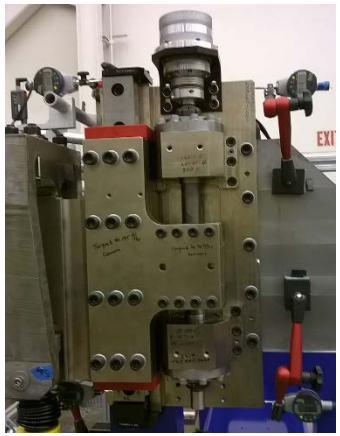

Absolute measurement of gap drive deformation (yaw) with Keyence sensors

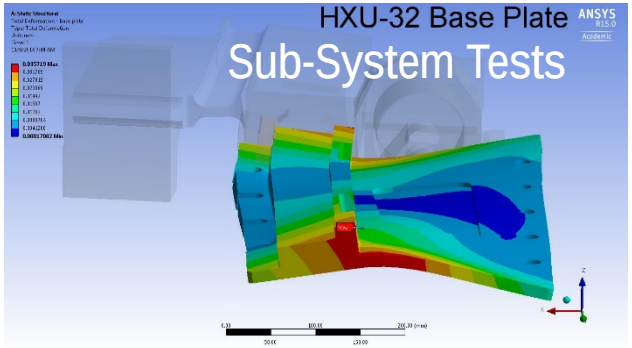

Relative measurement of movement of the base plate and bearing rail versus the steel frame with dial indicators.

Vendor Verifies Gap Drive Performance, Alignment, And Control System Response

Gap Encoders

Drive, Tilt, And Gap Limit Switches

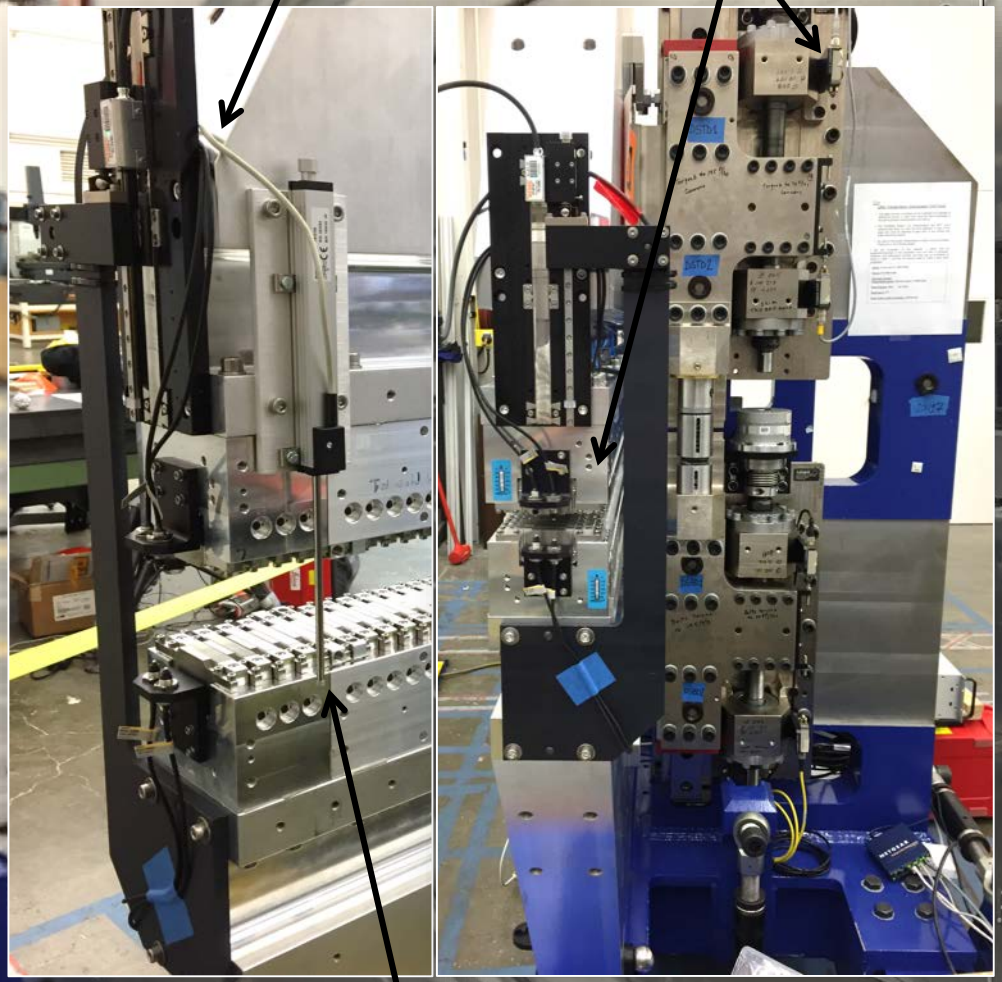

Vacuum Vessel Contact Sensor

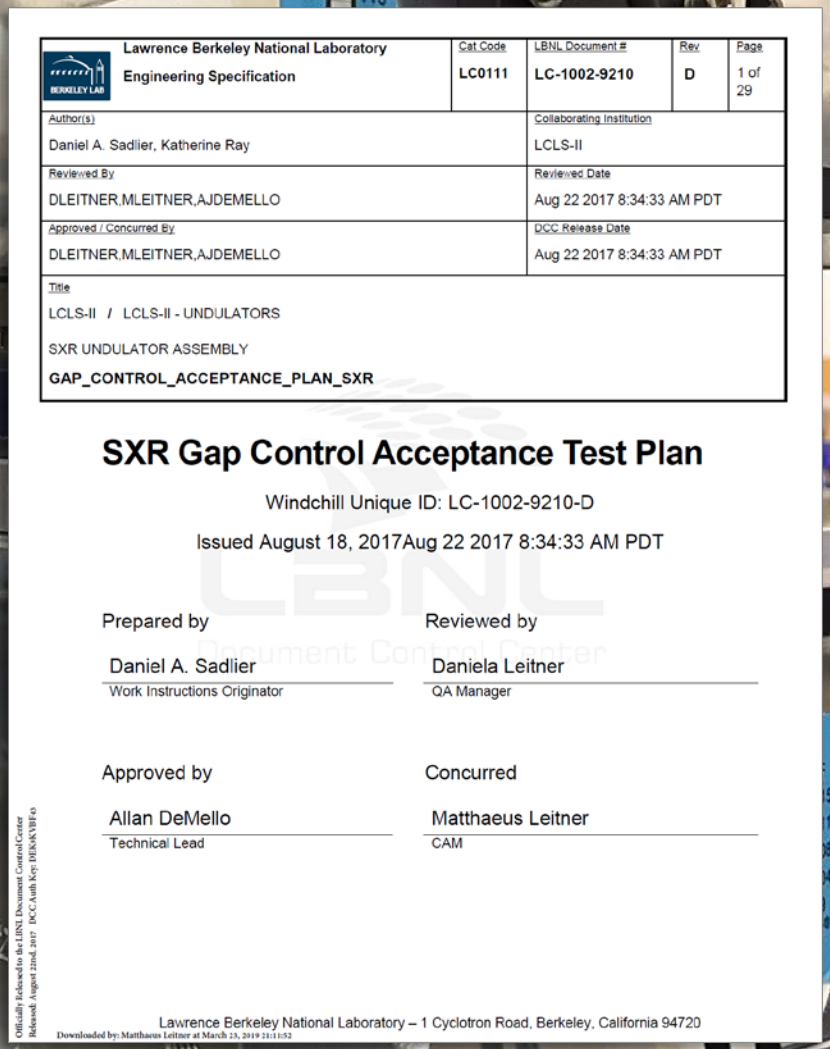

Lawrence Berkeley National Laboratory Engineering Specification	Cat Code LC0111	LBNL Document # LC-1002-9210	Rev D	Page 1 of 29
Author(s) Daniel A. Sadlier, Katherine Ray		Collaborating Institution LCLS-II		
Reviewed By DLEITNER,MLEITNER,AJDEMELLO		Reviewed Date Aug 22 2017 8:34:33 AM PDT		
Approved / Concurred By DLEITNER,MLEITNER,AJDEMELLO		DCC Release Date Aug 22 2017 8:34:33 AM PDT		
Title LCLS-II / LCLS-II - UNDULATORS SXR UNDULATOR ASSEMBLY **GAP_CONTROL_ACCEPTANCE_PLAN_SXR**				

SXR Gap Control Acceptance Test Plan

Windchill Unique ID: LC-1002-9210-D

Issued August 18, 2017Aug 22 2017 8:34:33 AM PDT

Prepared by
Daniel A. Sadlier
Work Instructions Originator

Reviewed by
Daniela Leitner
QA Manager

Approved by
Allan DeMello
Technical Lead

Concurred
Matthaeus Leitner
CAM

Lawrence Berkeley National Laboratory – 1 Cyclotron Road, Berkeley, California 94720

Officially Released to the LBNL Document Control Center
Released: August 22nd, 2017 DCC Auth Key: DEKSKYBF6
Downloaded by: Matthaeus Leitner at March 23, 2019 21:11:52

SXR Undulator In Magnet Measurement Facility

SXR Pre-production Undulator Reaches All LCLS-II Magnetic Field And Gap Repeatability Requirements

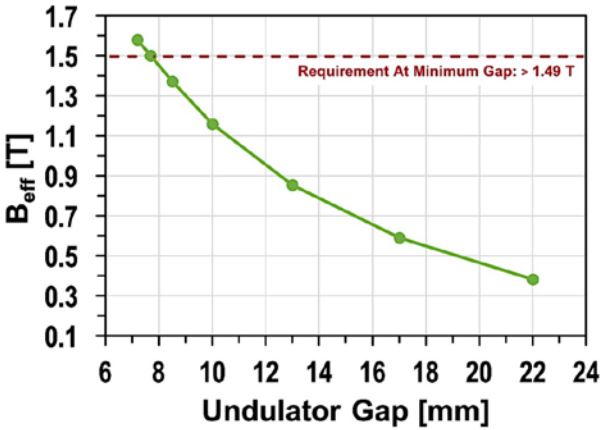

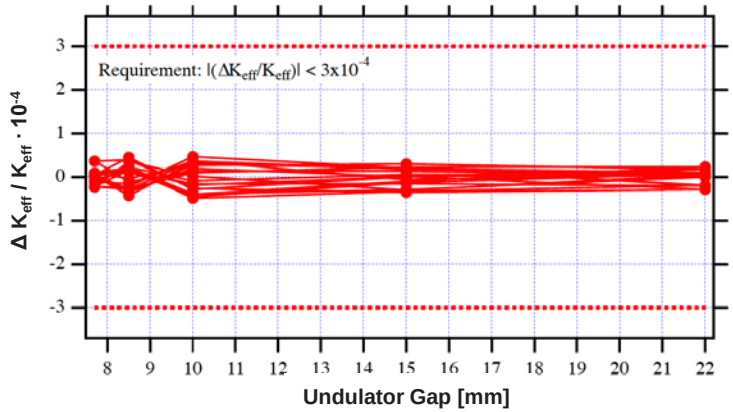

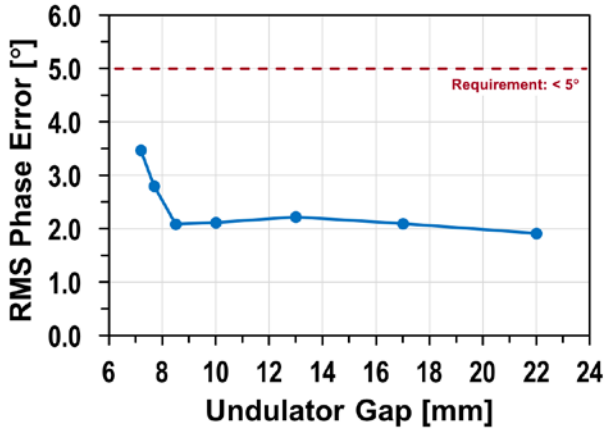

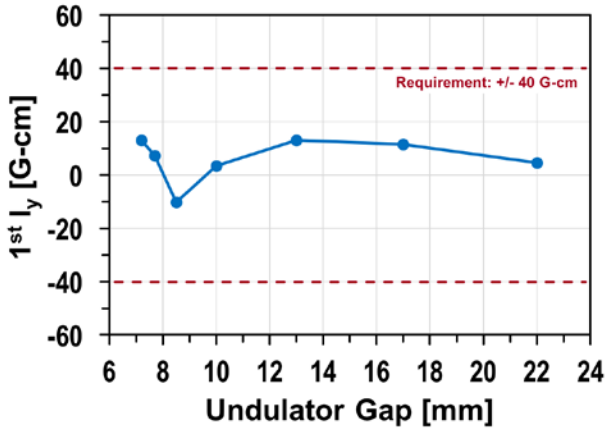

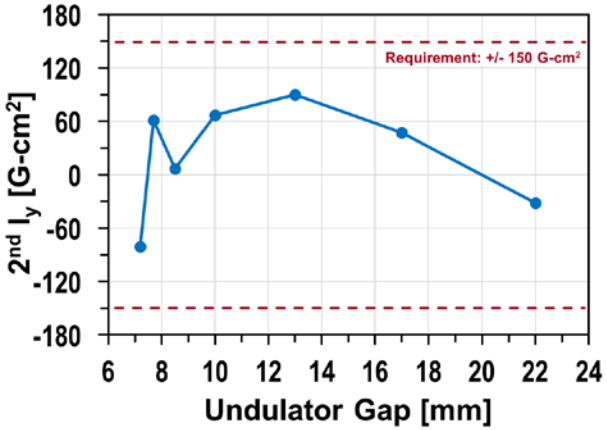

Total Tuning Accomplished In 16 Hours Utilizing Tuning Code

LBNL Supplies Hard X-Ray Production Undulator Segments (32 + 1 Spare Units) to LCLS-II

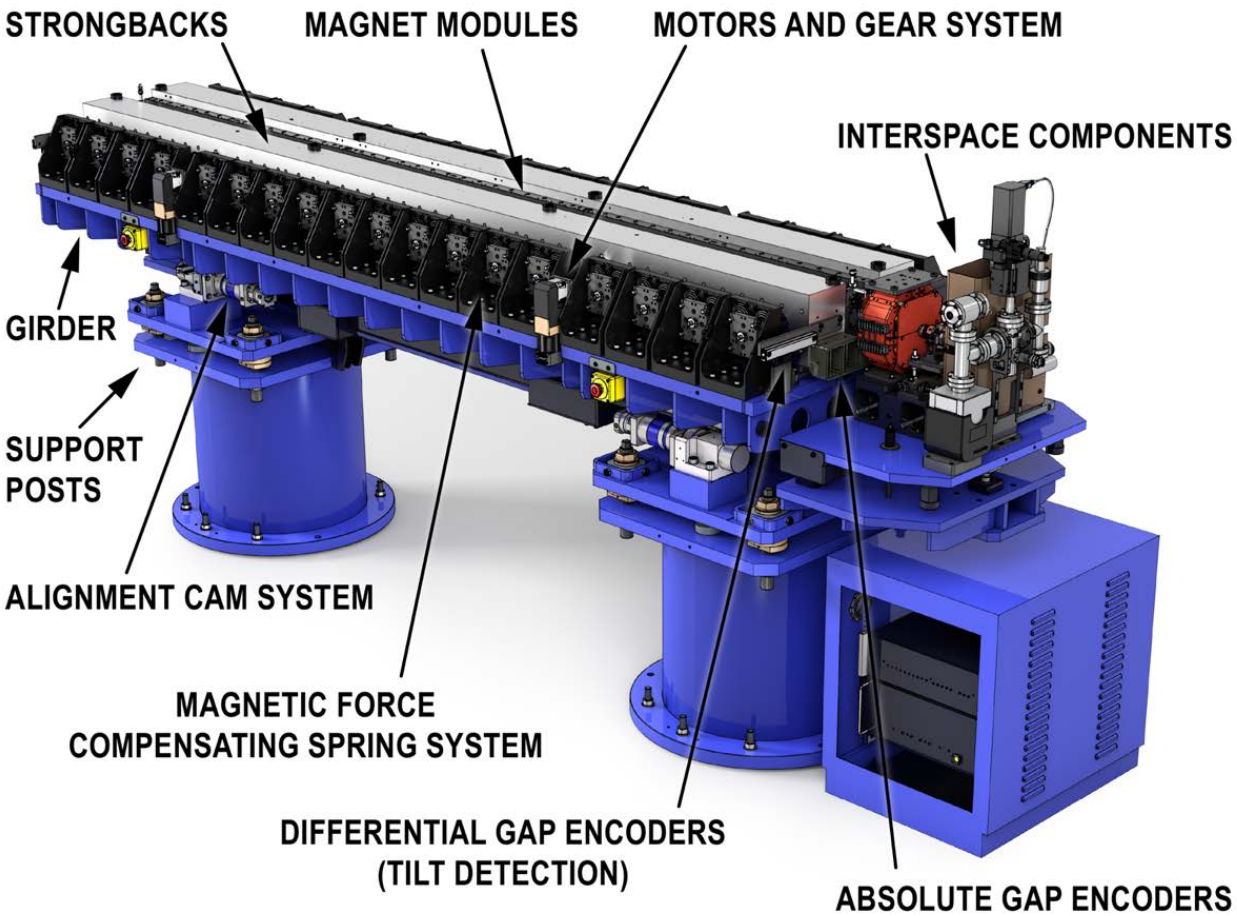

Magnet Module Vendor

neorem magnets

Mechanical Systems and Integration Vendor

KTC

MOTION SOLUTIONS

Horizontal Gap Vertically Polarizing Undulator (HGVPU) Is Preferred Design For LCLS-II Hard X-Ray Line

- LCLS has requested vertically polarized X-rays on hard x-ray line because of improved performance for beam splitting and for specific instruments
- ANL has successfully prototyped and tested a full 3.4m Horizontal Gap Vertically Polarizing Undulator (HGVPU)

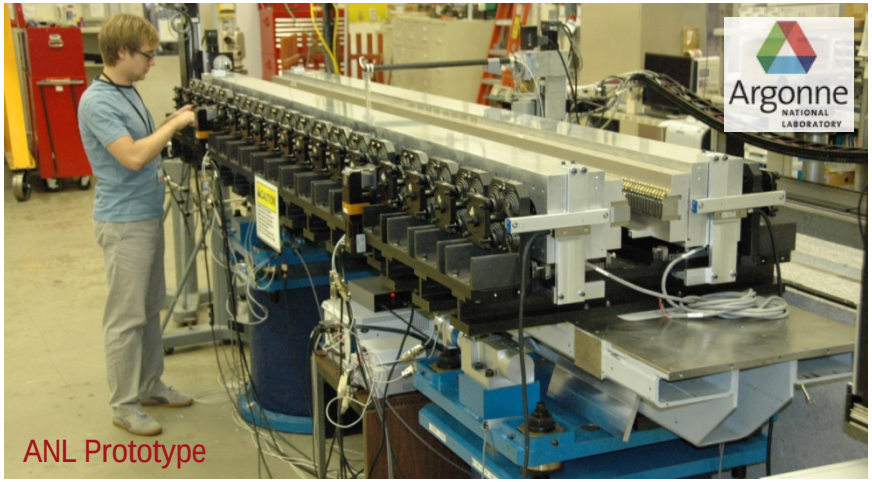

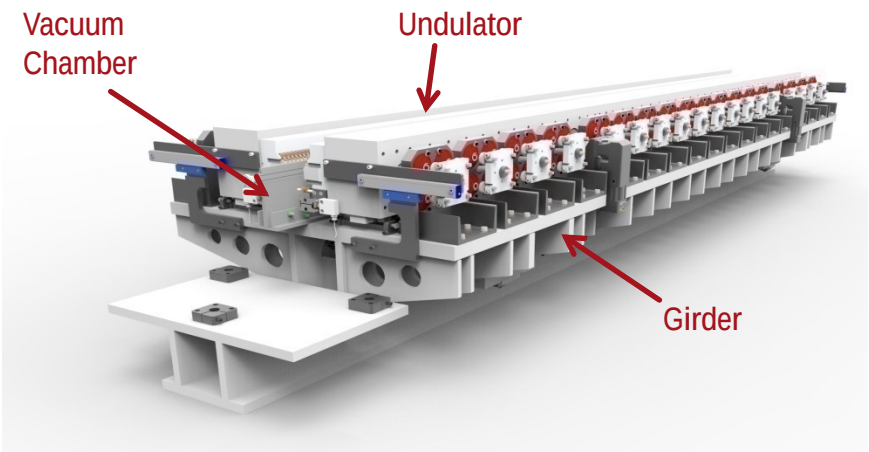

- LCLS-II and ANL worked on the integration of a complete system
  - Design optimized girder & vacuum chamber
  - Adapt existing control system
- HGVPU design was transferred to LBNL for production

Implemented In LCLS-II Project Baseline In January 2016

A Horizontal Gap Undulator Requires Innovative Magnetic Force Compensating Structure

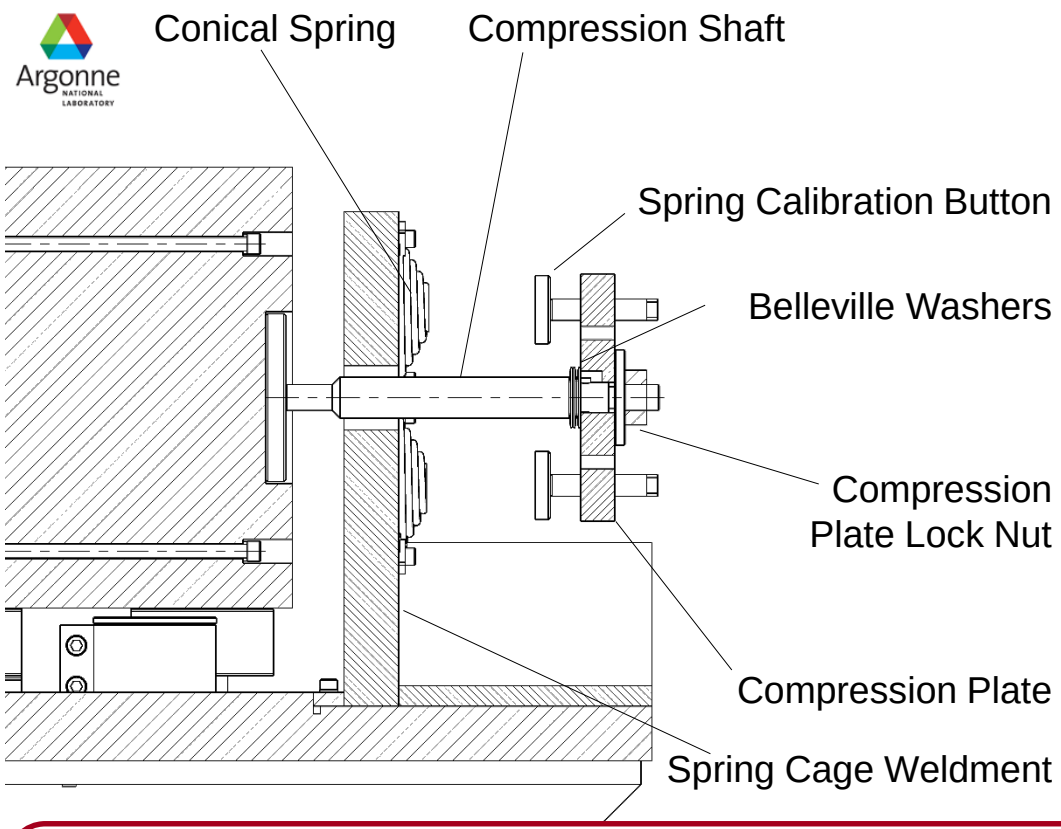

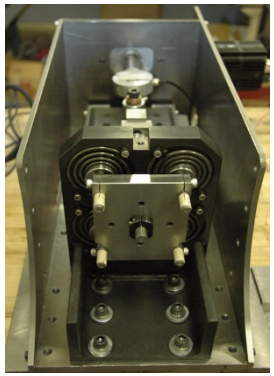

Spring Calibration Unit

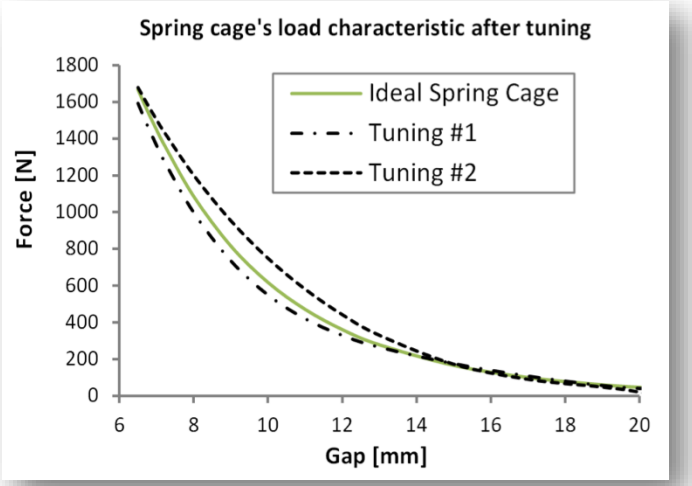

General Design Concept:
Attractive magnetic forces, that are perpendicular to the gravity force, are compensated by an array of conical springs. These springs are designed to exhibit non-linear force characteristics that can be closely tuned to match the force curve exerted by the magnetic field.

Slim Strongback Is Highly Sensitive To Small Residual Deflection Loads Of Any Origin [1]

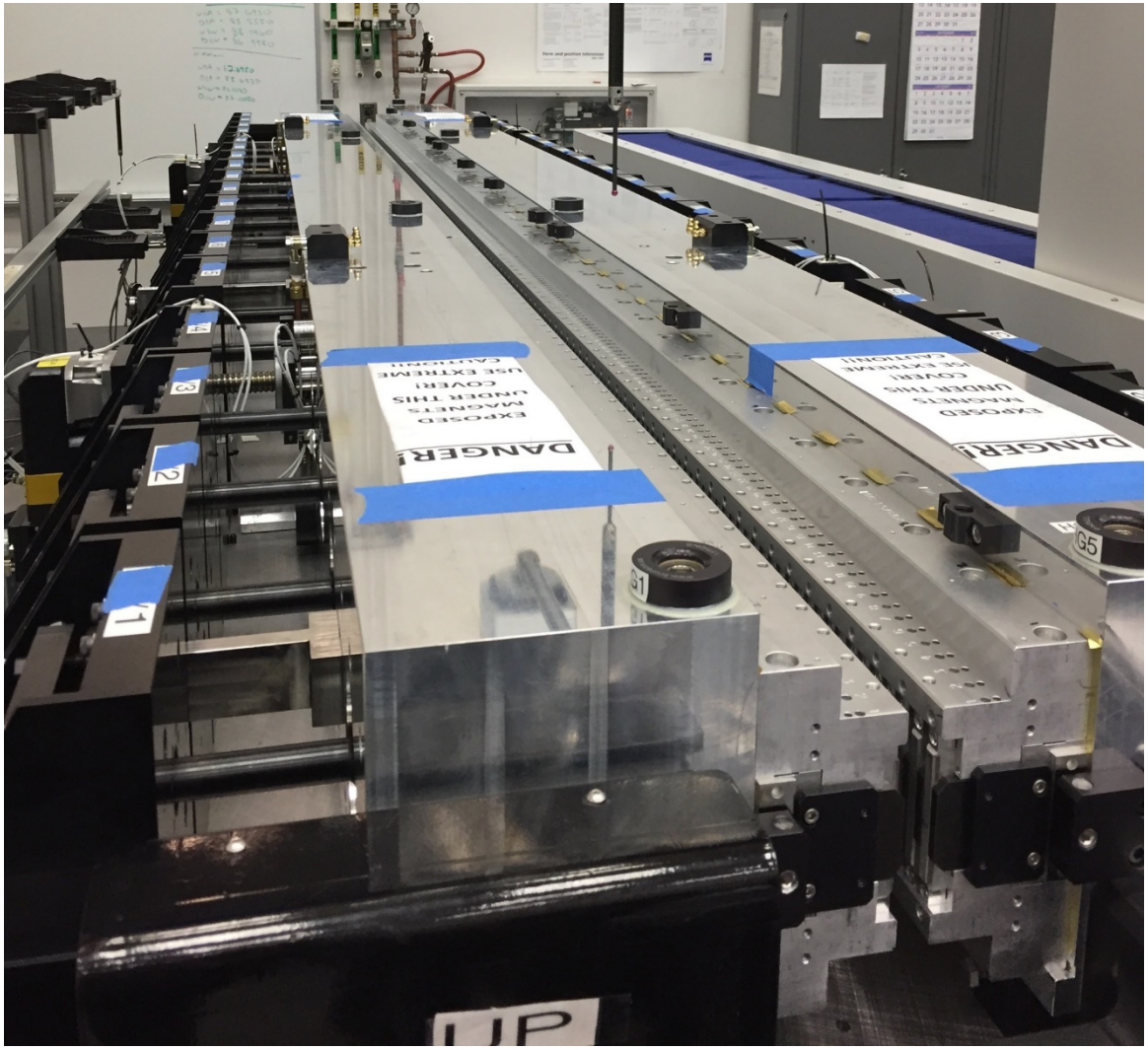

Slim Strongback Is Highly Sensitive To Small Residual Deflection Loads Of Any Origin [2]

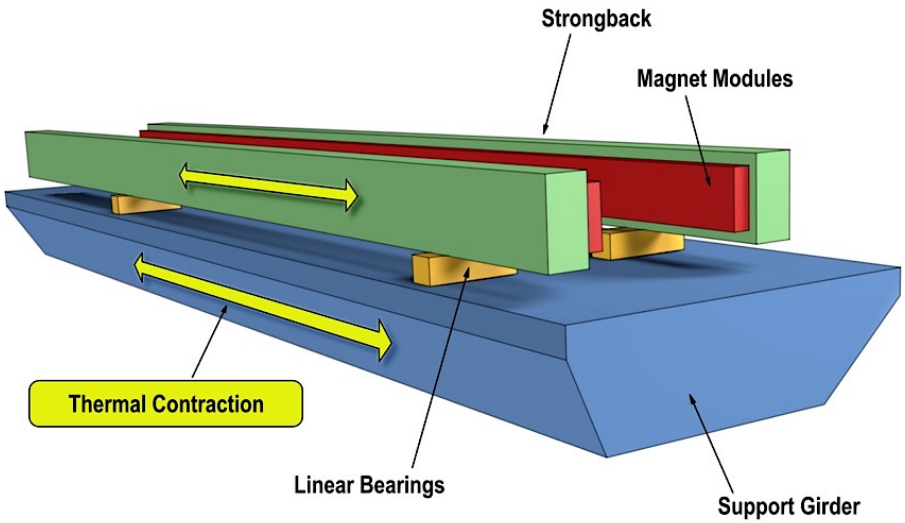

- Extensive testing of the HGVPU revealed that – although magnet forces are very well compensated in the device – even slight residual frictional forces or strain present in subcomponents and their interfaces can cause unpredictable strongback deformations on the micro-meter scale.
- These forces manifest itself in non-linear and random behavior and also lead to hysteresis effects.
- The current HGVPU design had to be modified to add provisions for better resilience to such forces or deflections.

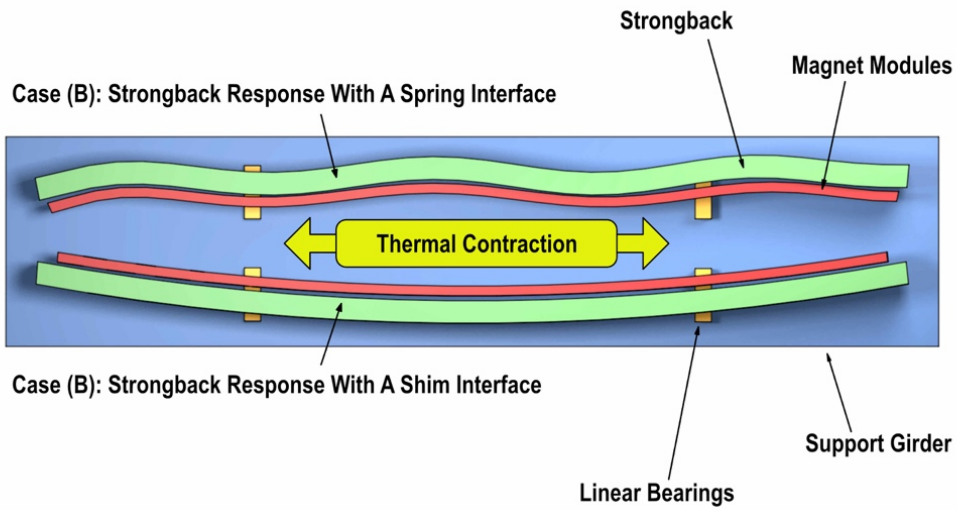

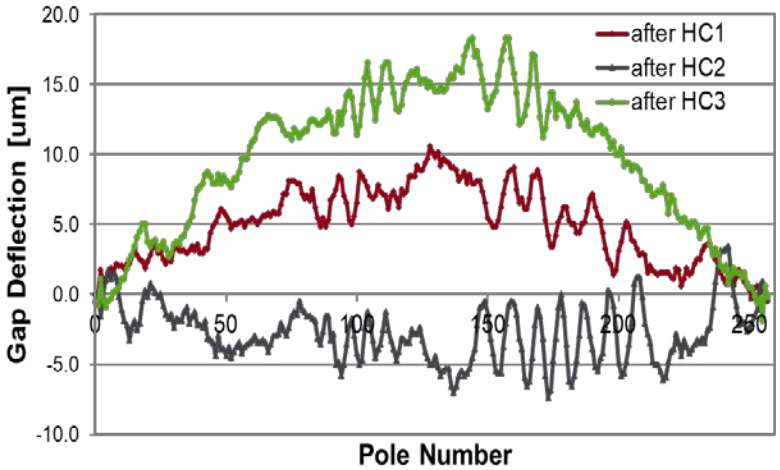

Main Flexure Addresses Global Strongback Bending

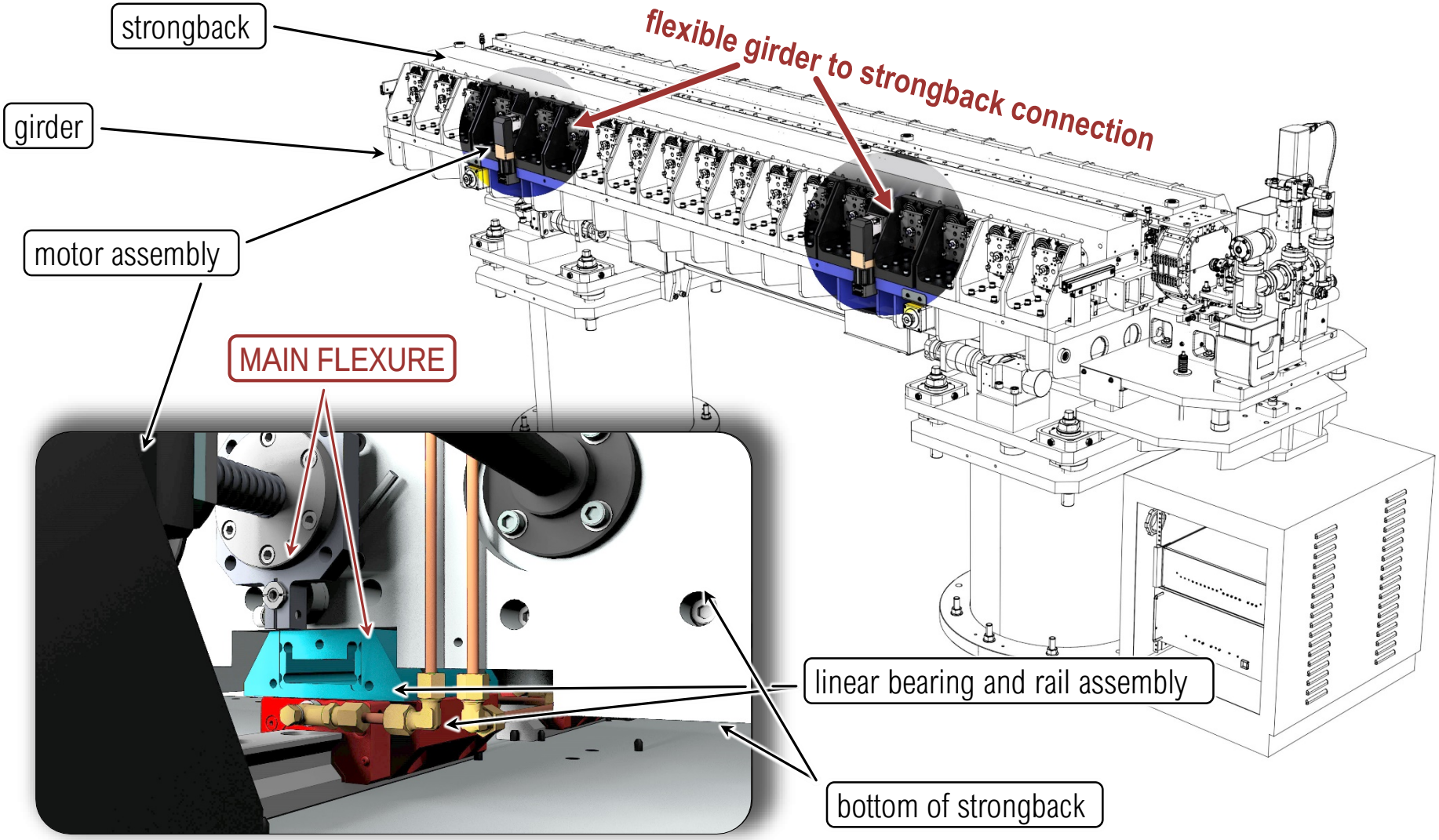

Motor Flexure Permits Strongback Movement

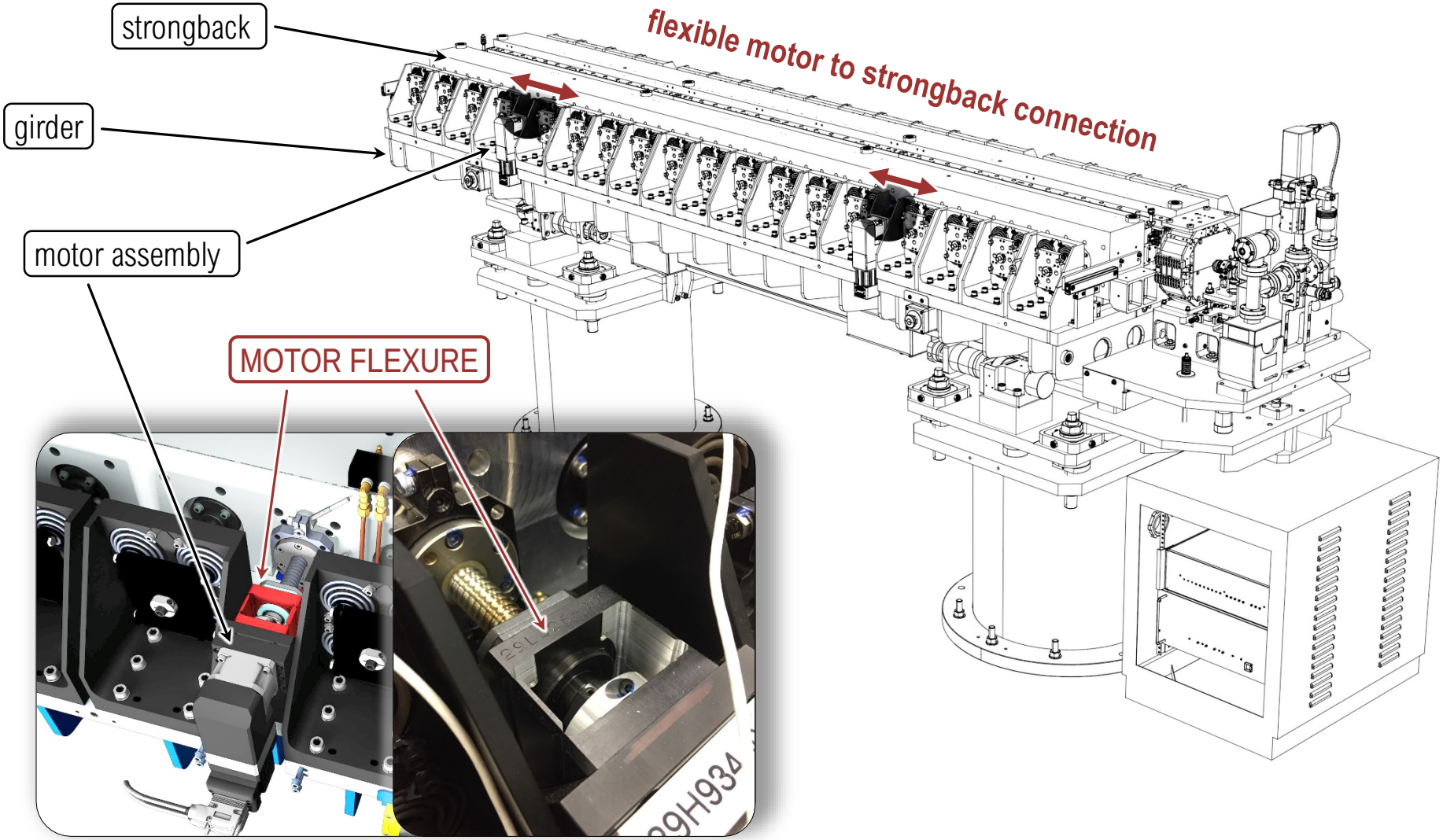

Magnet Module Box Flexures Eliminate Non-Linear Interface Forces and CTE Mismatch

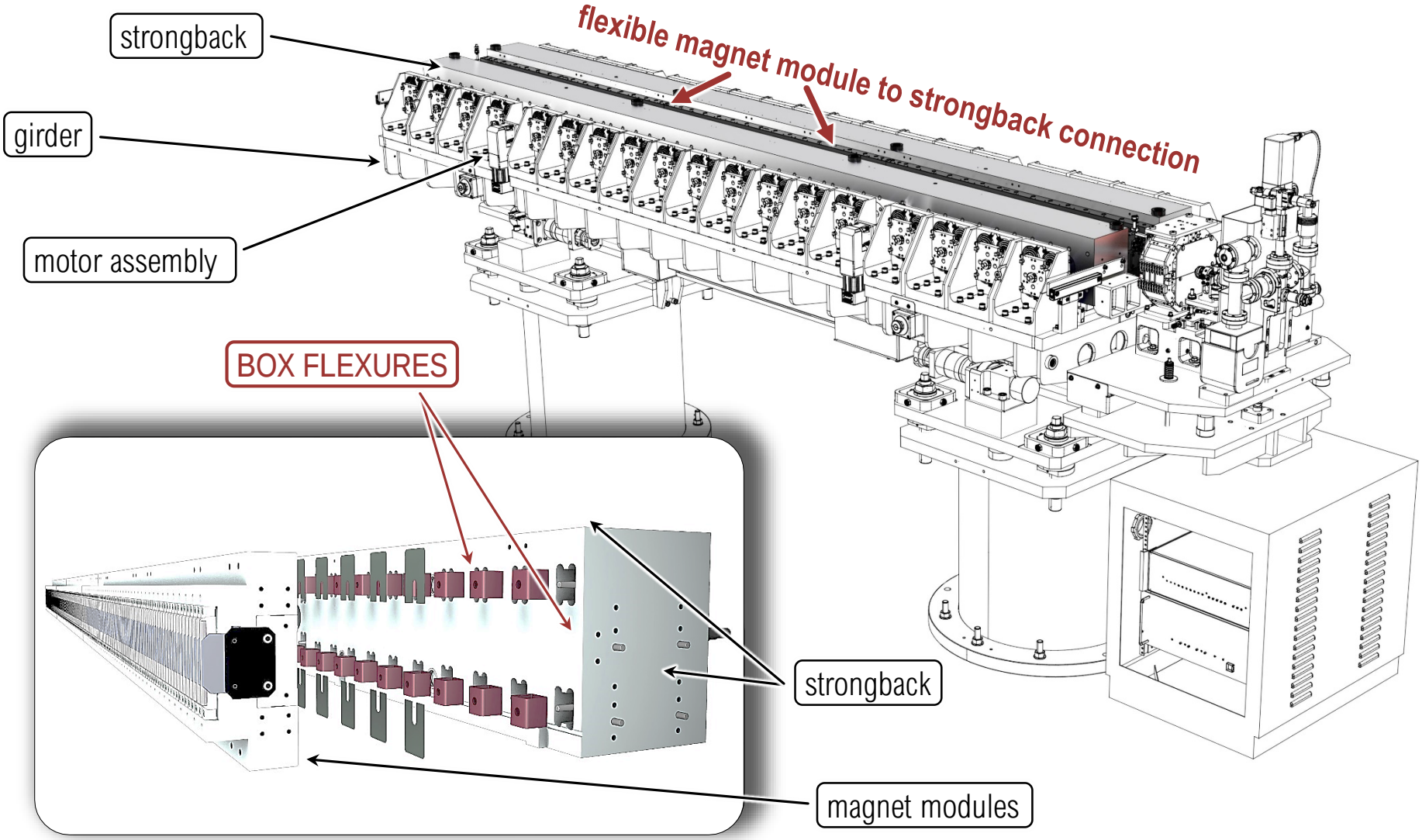

Spring Plunger Material Was Changed To Aluminum And Strongback Shimming Sequence Was Updated

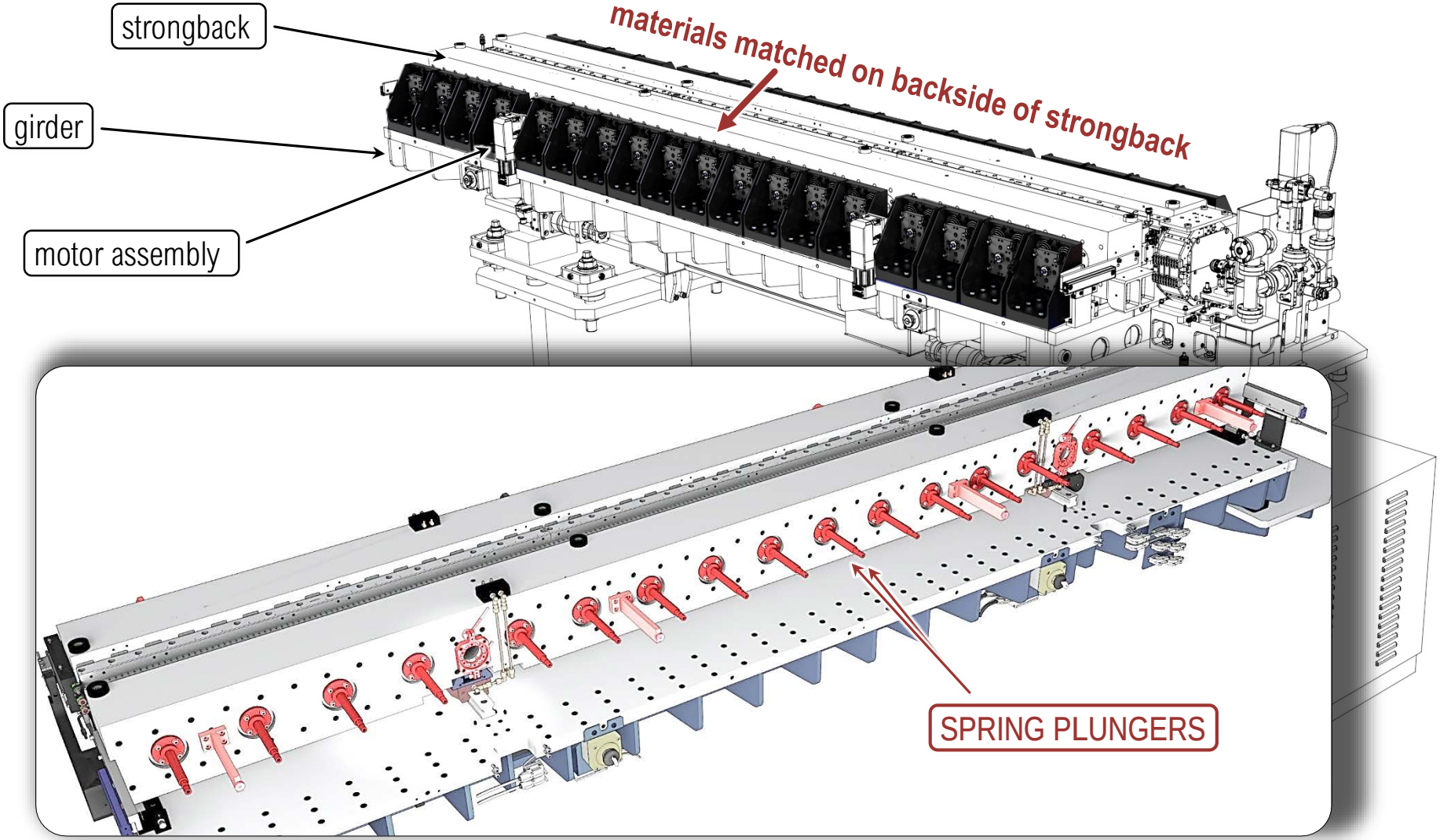

Gap Encoders Upgraded To Reduce Strongback Bending, Linear Bearing Wipers Eliminated To Reduce Roll, Anti-Backlash Spring Holders Optimized To Eliminate Friction

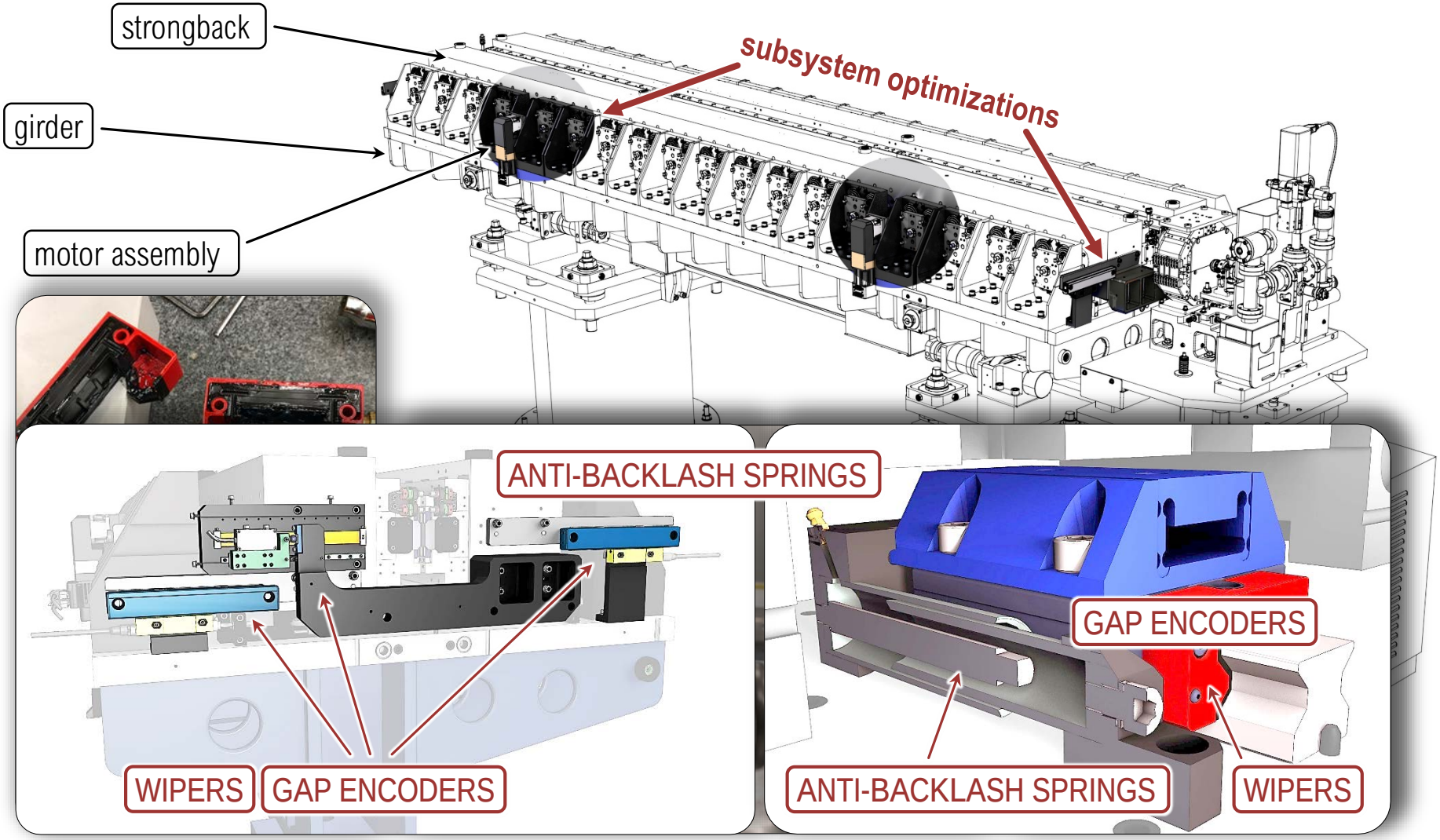

Extensive Environmental Testing Demonstrates Robustness of New Undulator Mechanical System

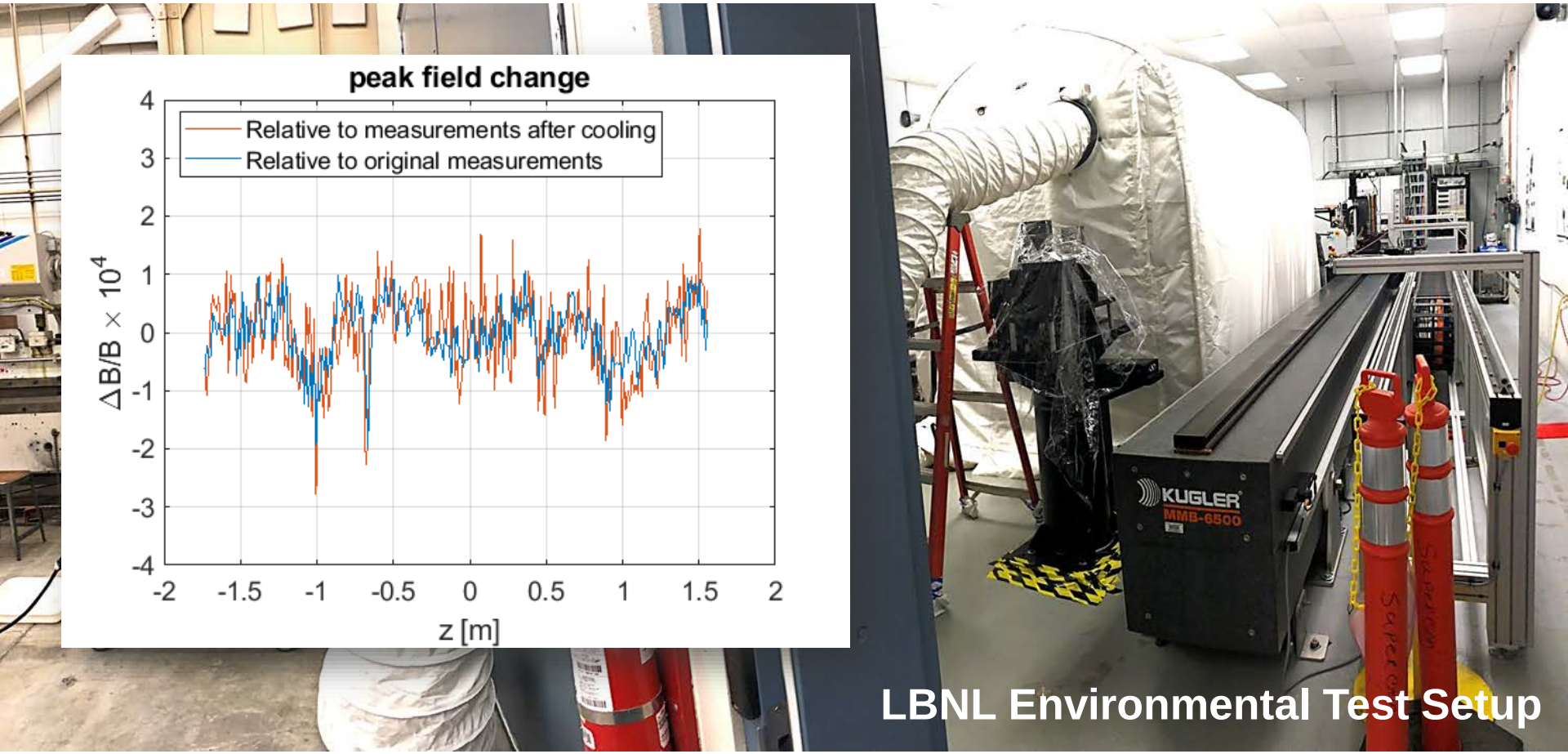

Strongback distortion is minimal after thermal excursions (10 ºC to 35 ºC).

HGVPU Undulator
Reaches LCLS-II Performance Requirements

HGVPU Tuning Can Be Achieved Within Days: Typical Undulator Tuning Results (MoSo #2)

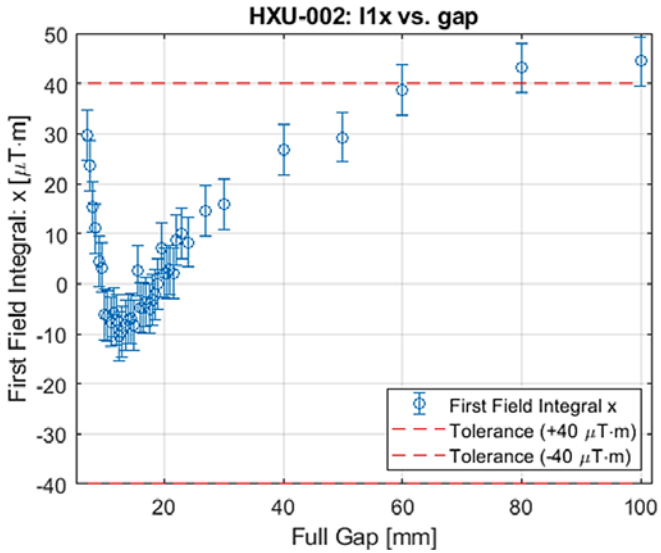

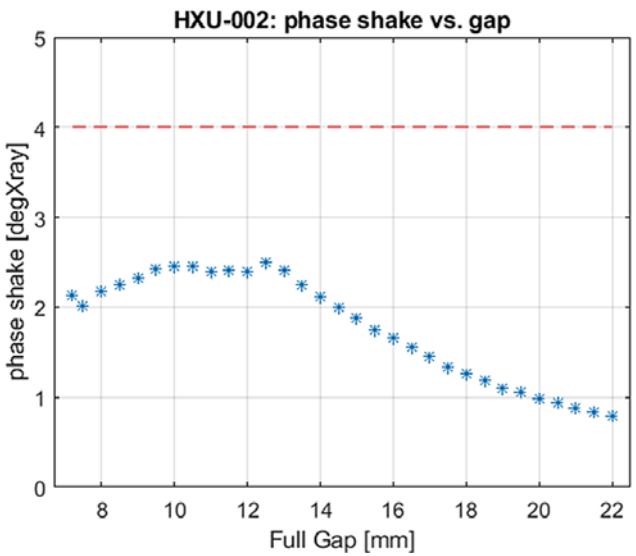

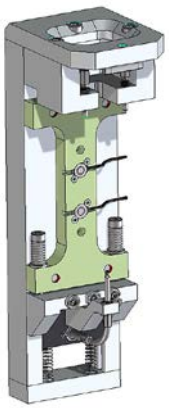

Tuning Fixture

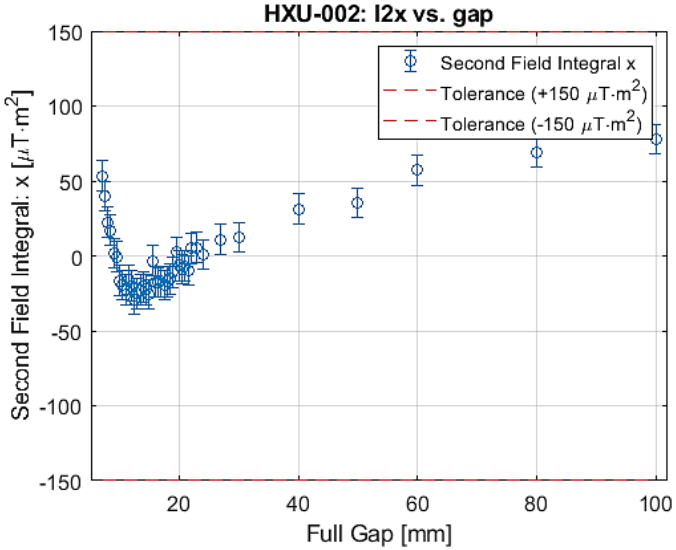

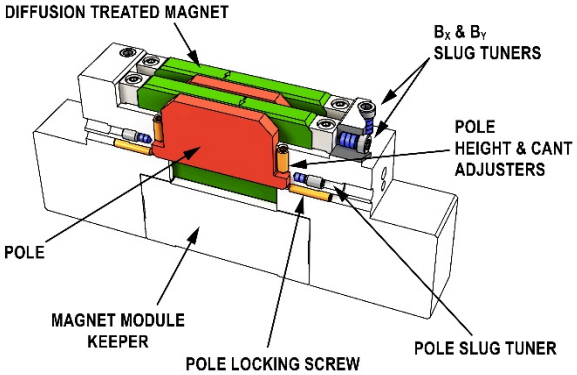

Magnet Module Design

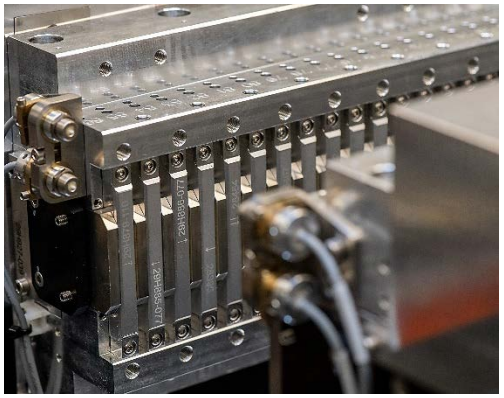

Neorem Magnet Modules

Undulator Manufacturing And QA Documents Ensure Build Quality At Vendors

LBNL LCLS-II Quality Assurance Plan (LC-1000-1784) Specifies Undulator Quality Processes

Quality Assurance Records

- Detailed Work Instructions for All Subsystems
- Specific Verification Hold Points
- Signed Acceptance Criteria Listings
- **Transmitted To SLAC with Each Undulator**

Configuration Control

- Engineering Change Notes
- Deviation Requests
- Non Conformance Reports
- 850 Documents Tracked (Aug 2018)
- Documents Stored in PLM System
- **Transmitted To SLAC with Each Undulator**

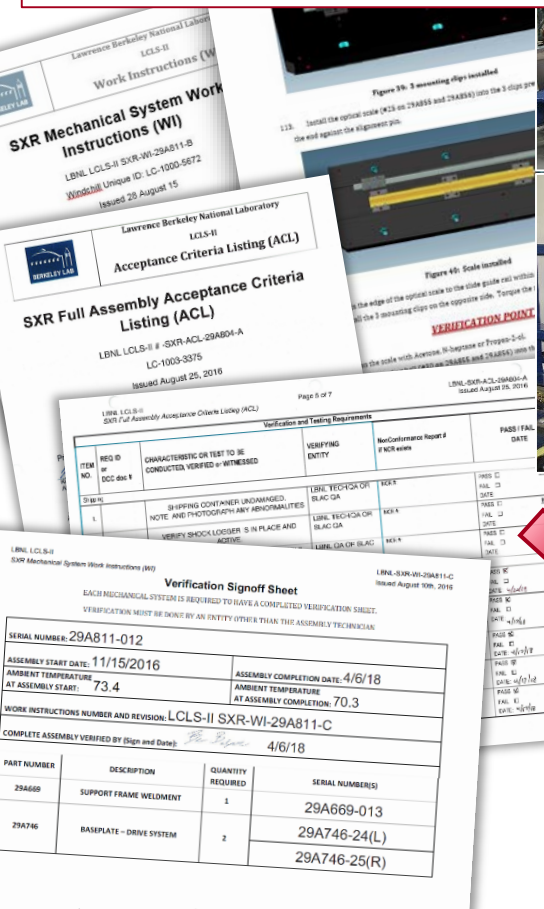

Production Floor

Ready For Shipment To SLAC

Manufacturing is controlled by detailed Work Instructions

- Work instructions provide best practices for the assembly process
- Work instructions include an appendix of verification points to record critical information.

Stringent Manufacturing Processes Are Applied To Undulator Production

Product Quality And Product Configuration Are Actively Controlled

Red-Lined Drawing
(Revision Controlled)

SXR QA Processes Well Established:
All Documents Transferred, Will Close Out Open QA Issues Next

KTC VAC VACUUMSCHMELZE

Undulator Vendors

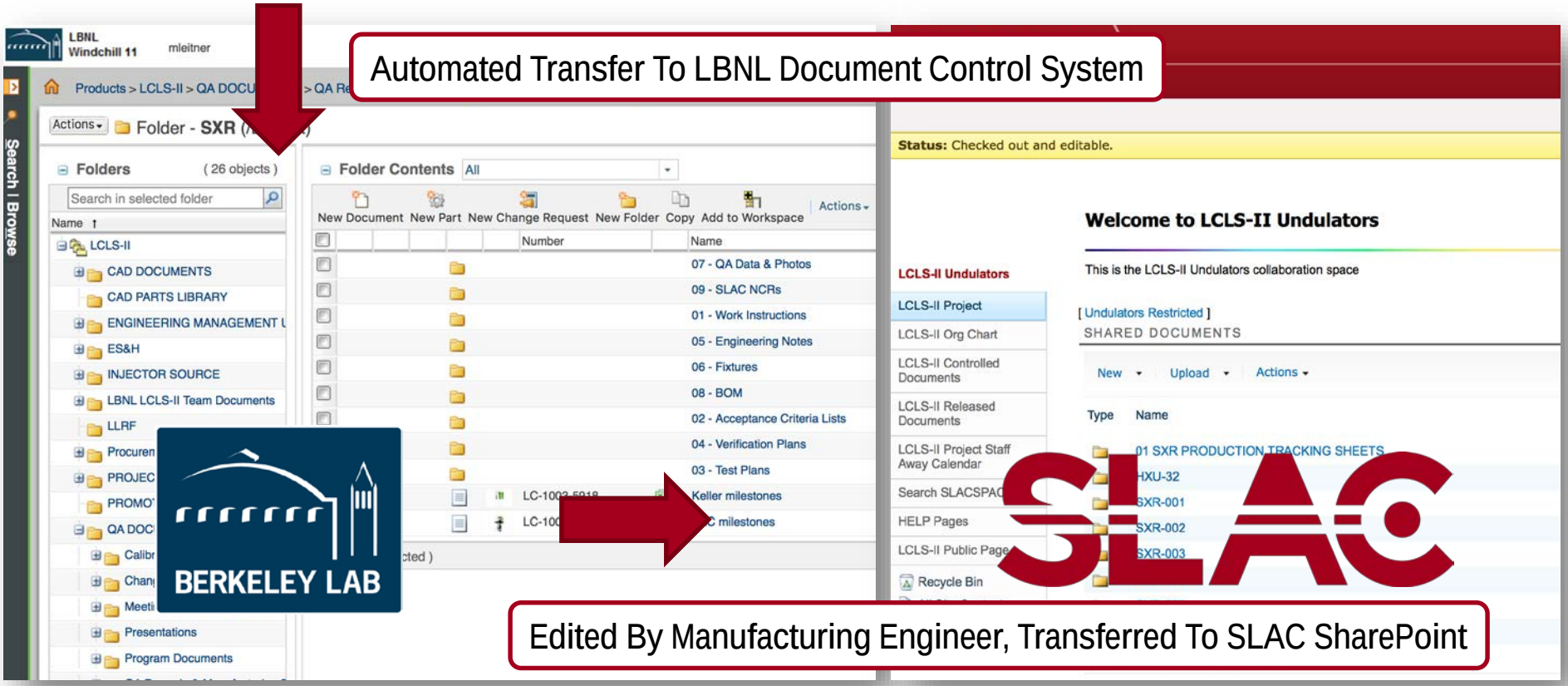

Each Undulator Delivery Includes Transmittal Of Entire Supplier And LBNL QA Records

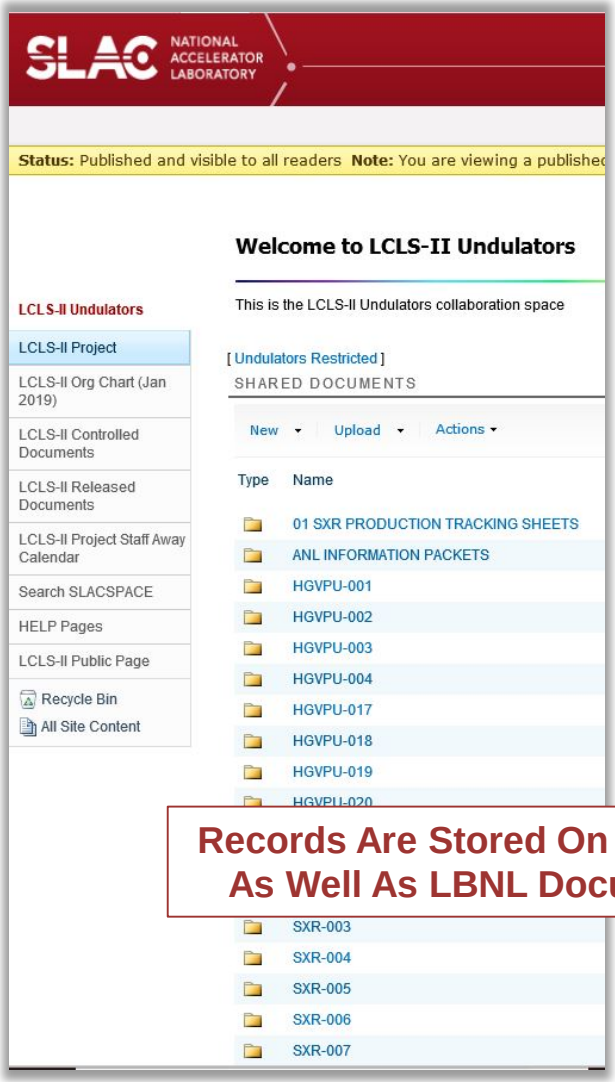

List of Documents

Folder	Description
Drawing Package	As built BOM with serial #'s
Drawing Package	Full Drawing Package in .pdf format
Drawing Package	CAD Model
Drawing Package	Full Drawing Package in .mi format
Drawing Package	Magnet Sort Map
Manufacturing Data	Magnetic Module ACL
Manufacturing Data	Full System ACL
Manufacturing Data	Change Records & Log Information
Manufacturing Data	Magnet Measurement Raw Data
Summary QA Data	Summary Sheet including fiducials, encoder settings, pole height
Summary QA Data	Magnet Tuning Report

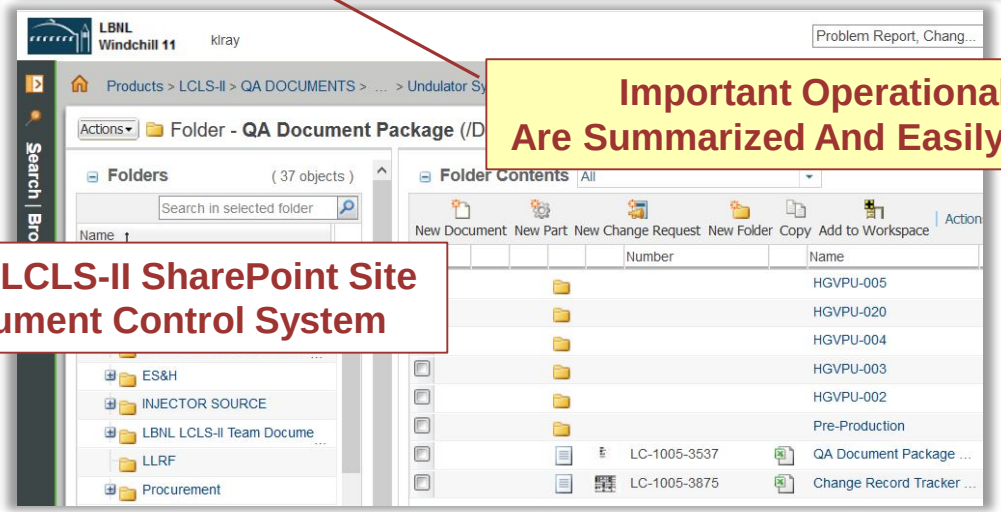

Important Operational Data Are Summarized And Easily Accessible

Records Are Stored On LCLS-II SharePoint Site As Well As LBNL Document Control System

HGVPU Transitioned To Production: Substantial QA Vendor Oversight Ensures Success

- Weekly conference calls with each supplier
- Several daily communications with LBNL technical procurement expert
- Regular visits by LBNL technical experts
  - Transfer of technical know-how
  - Training and reinforcement of good work practices
  - Excellent two-way interaction with our suppliers
- QA vendor visits
  - Regular contact between LBNL and supplier QA engineers ensures smooth transfer of manufacturing records and inspection reports
  - Well established non-conformance and deviation procedures
- Up-To-Date released drawings and manufacturing documents ensure high-quality undulator builds

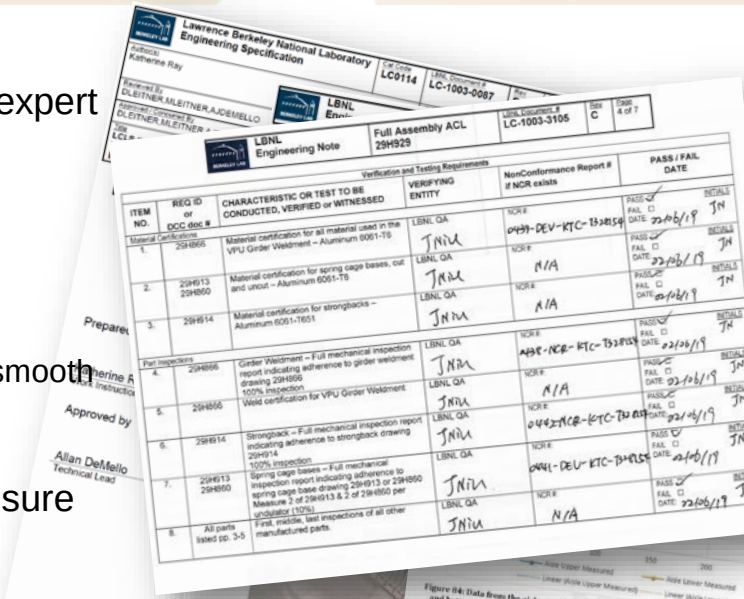
Lawrence Berkeley National Laboratory
Engineering Specification
LBNL Engineering Note
Full Assembly ACL 29H929
LC-1003-3105

ITEM NO.	REQ ID or DCC doc #	CHARACTERISTIC OR TEST TO BE CONDUCTED, VERIFIED or WITNESSED	VERIFYING ENTITY	NonConformance Report # if NCR exists	PASS / FAIL DATE
Material Certifications					
1.	29H866	Material certification for all material used in the VPU Girder Weldment – Aluminum 6061-T6	LBNL QA	NCR# 0499-DEV-KTC-T3281549	PASS ✓ FAIL ☐ DATE 02/06/19
2.	29H913 29H860	Material certification for spring cage bases, cut and uncut – Aluminum 6061-T6	LBNL QA	NCR# N/A	PASS ✓ FAIL ☐ DATE 02/06/19
3.	29H914	Material certification for strongbacks – Aluminum 6061-T651	LBNL QA	NCR# N/A	PASS ✓ FAIL ☐ DATE 02/06/19
Part Inspections					
4.	29H866	Girder Weldment – Full mechanical inspection report indicating adherence to girder weldment drawing 29H866 100% inspection	LBNL QA	NCR# 0498-NCR-KTC-T3281548	PASS ✓ FAIL ☐ DATE 02/06/19
5.	29H866	Weld certification for VPU Girder Weldment	LBNL QA	NCR# N/A	PASS ✓ FAIL ☐ DATE 02/06/19
6.	29H914	Strongback – Full mechanical inspection report indicating adherence to strongback drawing 29H914 100% inspection	LBNL QA	NCR# 0442-NCR-KTC-T3281547	PASS ✓ FAIL ☐ DATE 02/06/19
7.	29H913 29H860	Spring cage bases – Full mechanical inspection report indicating adherence to spring cage base drawing 29H913 or 29H860 Measure 3 of 29H913 & 2 of 29H860 per undulator (10%)	LBNL QA	NCR# 0441-DEV-KTC-T3281546	PASS ✓ FAIL ☐ DATE 02/06/19
8.	All parts listed pp. 3-5	First, middle, last inspections of all other manufactured parts	LBNL QA	NCR# N/A	PASS ✓ FAIL ☐ DATE 02/06/19

QA Visit At Girder Supplier

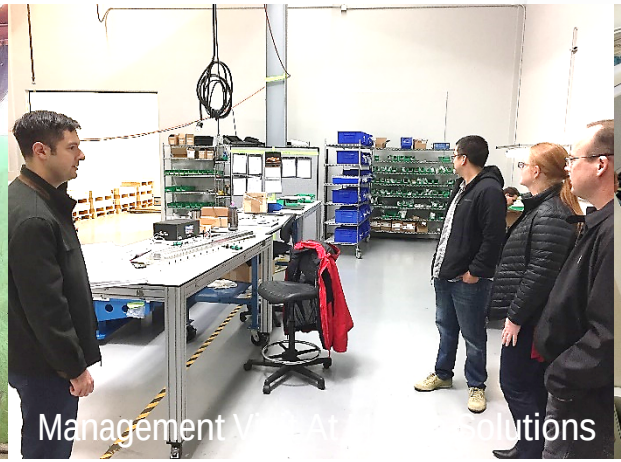
Management V[illegible] At [illegible] Solutions

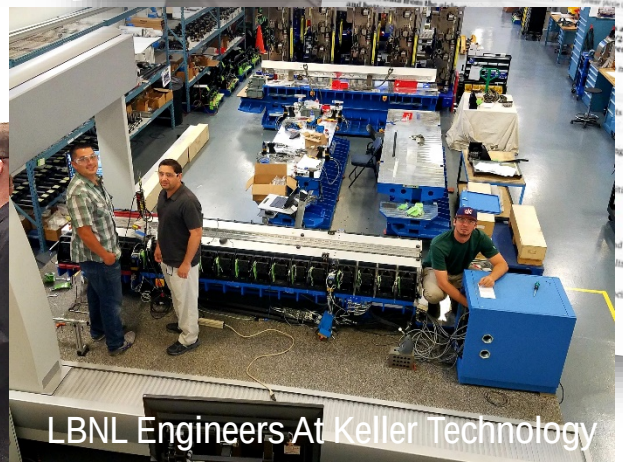
LBNL Engineers At Keller Technology

SXR Undulator Status (WBS 1.03.04): Work Packages Completed

- 21 + 1 SXR undulators have been delivered
- Fixtures and spare components have been delivered to SLAC
- QA packages have been completed and submitted to SLAC
- 18 SXR are ready for installation, no issues during calibration
- Next step: Close out contracts

SXRs Stored in SLAC Warehouse

All SXR Deliveries Completed

SXR in LCLS-II Tunnel

HGVPU Undulator Status (WBS 1.03.06): Transitioned to Regular Production

- HGVPU is now in full production: 10 undulators delivered so far
  - Undulator tuning is unproblematic (completed within days)
  - All magnet modules delivered
- Project risk reduced: Mechanical design modifications successful
  - Environmental testing completed
  - Undulator mechanical structure is now robust
  - Final design review held October 18, 2018
  - New absolute gap encoder implemented to enhance repeatability
- Next step: Reach production rate of 3 to 4 undulators per month

HGVPU
Env. Testing Completed

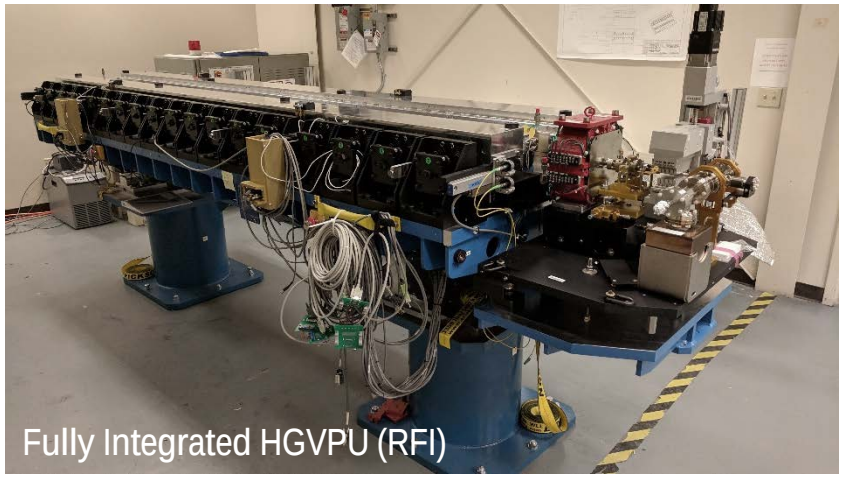
Fully Integrated HGVPU (RFI)

HGVPU Storage AT SLAC

Summary

- LCLS-II free electron laser project includes a 0.7 MeV VHF injector gun, 4 GeV superconducting linac, two 4 kW (@ 2K) cryoplants, and two variable gap undulator lines.
- Undulator installation will be completed by end of 2019.
- LCLS-II first light: Spring 2021.
- LBNL has completed the fabrication of all 22 soft-x-ray (SXR) undulator segments. SXR undulators are horizontally polarizing, hybrid permanent magnet undulator structures.
- LBNL is currently producing 33 hard x-ray (HGVPU) undulator segments. HGVPU undulators are vertically polarizing, hybrid permanent magnet undulator structures with novel magnetic force compensation.
- HGVPU technical development was difficult due to a challenging undulator design. However, vertically polarized radiation is preferred by experimental systems.
- LBNL undulator manufacturing was optimized for mass production using external vendors with a rigorous quality program and successful manufacturing and procurement oversight.

LBNL LCLS-II Undulator Team

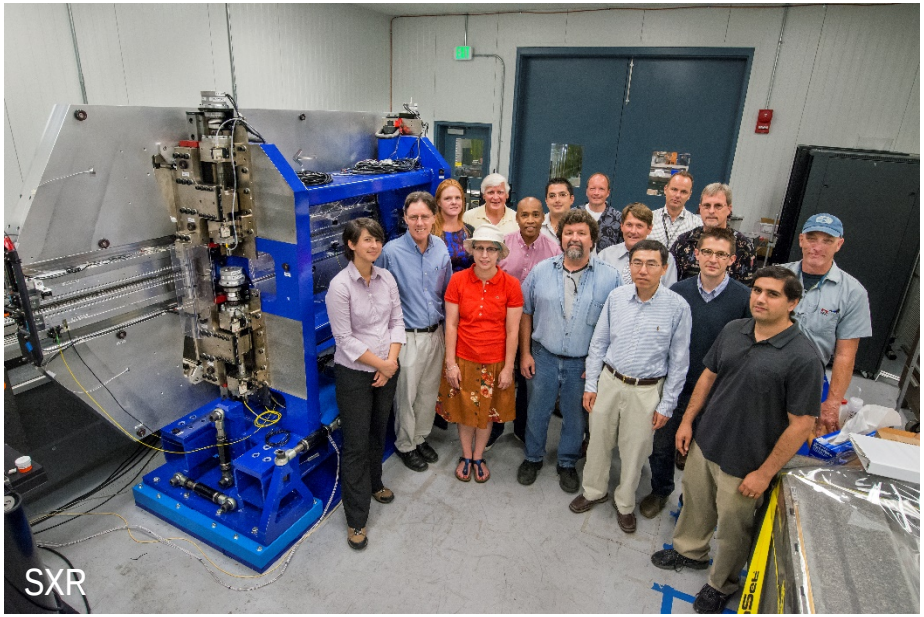

THANK YOU