NSLS-II, Photon Science Division Beamline Engineering Group Portfolio Endstation & Analysis Examples

Beamline Engineering Meeting at BNL

25 March 2019

U.S. DEPARTMENT OF ENERGY | Office of Science

BROOKHAVEN NATIONAL LABORATORY

NSLS-II Beamline Engineering Group

Steve Hulbert
- Group Leader (interim)

Steve Antonelli
- EPoC for Structural Biology Program
- BL/ES developed: ARI R&D (in progress)

Daniel Bacescu
- EPoC for Soft X-ray Scattering & Spectroscopy Program
- BL/ES developed: CSX, IOS, SMI, J-PLS (in progress)

Scott Coburn
- EPoC for Complex Scattering Program
- BL/ES developed: IXS, FXI
- WFO: APS 27-ID RIXS endstation

Christopher Eng
- BL/ES developed: FIS/MET, IOS (in progress)

Ed Haas
- EPoC for Diffraction & In-Situ Scattering program
- BL/ES developed: TES, XFM, PDF

Lukas Lienhard
- EPoC for Expt. Development Program
- BL/ES developed: CMS, QAS, FIS/MET

Mike Lucas
- EPoC for Hard X-ray Scattering Program
- BL/ES developed: ISR, HEX (in progress)

Steve O'Hara
- Structural and thermal analysis, esp. finite element
- Front end engineering and analysis (NSLS-II and APS)

Yi Zhu
- EPoC for Imaging & Microscopy Program
- BL/ES developed: ESM, SIX, XFM, B-CDI (in progress)

ePOC = Engineering Point of Contact
BL = beamline
ES = endstation

Endstation engineering examples

Haas: 28-ID Experimental Endstation Capabilities

X-ray Powder Diffraction (XPD) and Pair Distribution Function (PDF) beamlines

I. Experimental Use of Hazardous Gases

- Flammable/Explosive Gases: H_2, CH_4, C_2H_4
- Toxic Gases: CO, NO, NO_2, SO_2, C_2H_4, CH_3SH

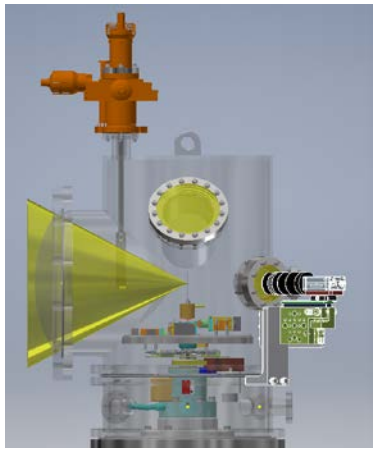

II. Heated Rotating Flow Cell

- Double insulated heat zone
- Capillary tube samples
- 5 standard collet sizes
- Thermocouples inside/outside capillary tube

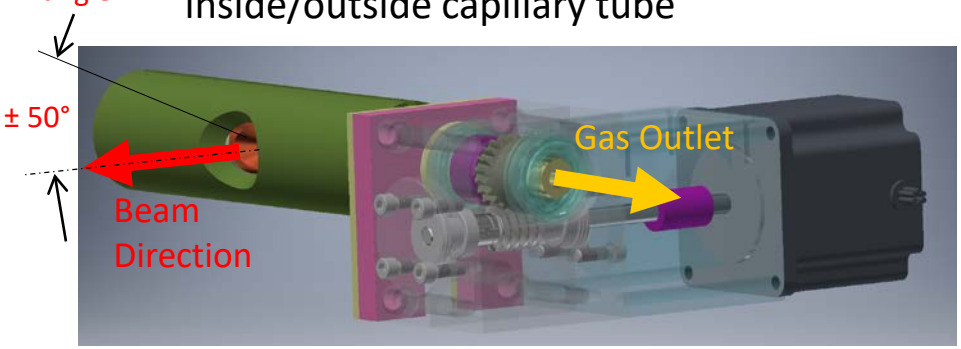

III. 5T Magnet / Cryostat

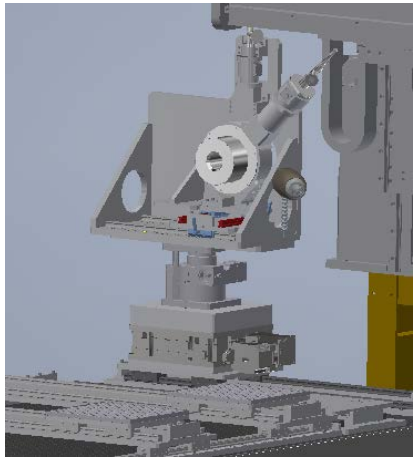

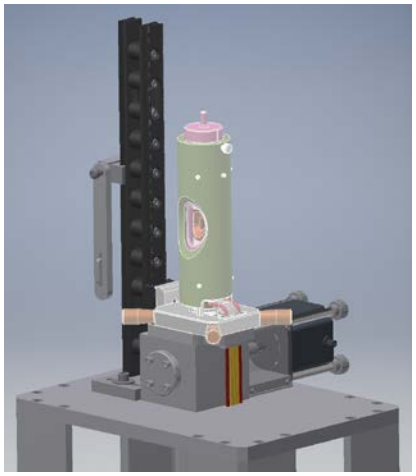

Haas: 28-ID Capabilities (continued)

IV. Automatic Sample Changing

- PDF 32-Sample Rotating Automatic Sample Changer

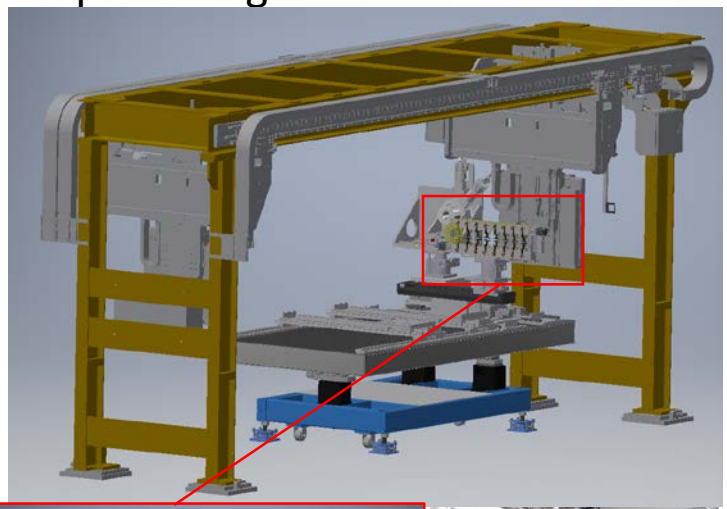

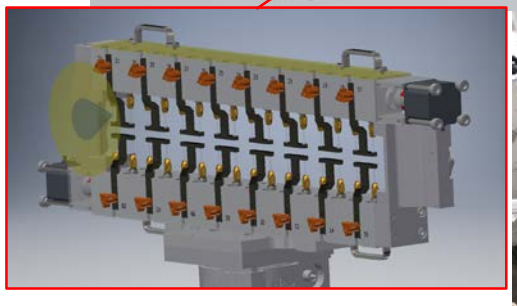

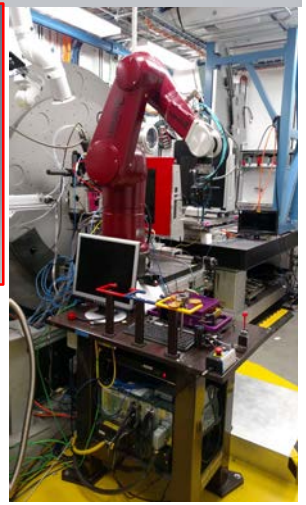

- XPD Robotic Sample Changer

V. Remote Detector Control & Positioning

- XPD Perkin-Elmer / Multi-Analyzer Detector

- PDF Detector Bridge

Coburn: Endstations

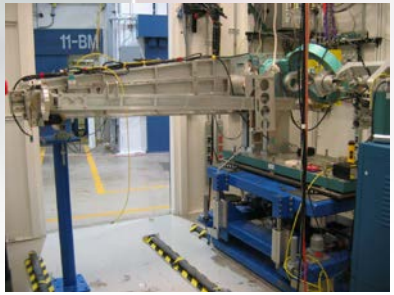

- FXI (18-ID) Beamline Transmission X-Ray Microscope
- CSX (23-ID-1) TARDIS In-vacuum Diffractometer
- APS MERIX Spectrometer (currently being upgraded)
- APS Liquid Spectrometer (decommissioned -> J-PLS)
- NSLS Liquid Spectrometer
- CMS (11-BM) Beamline WAXS/SAXS Chamber

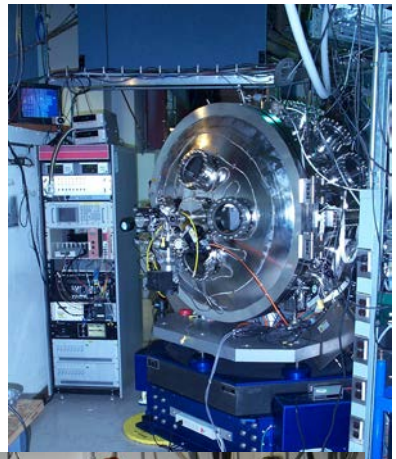

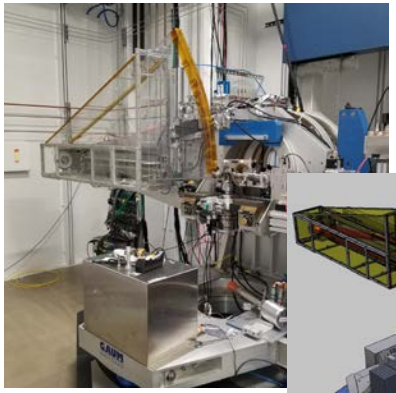

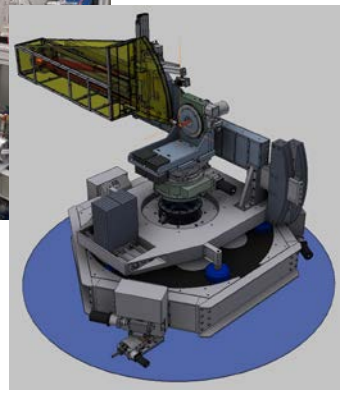

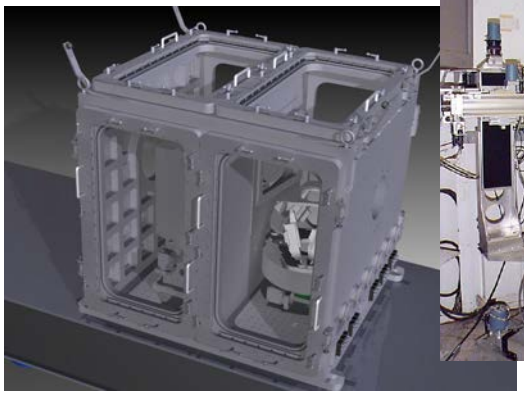

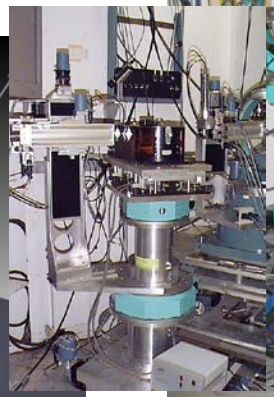

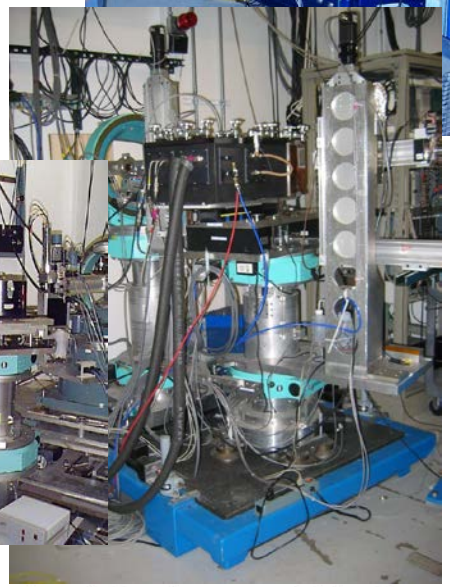

Coburn: Other

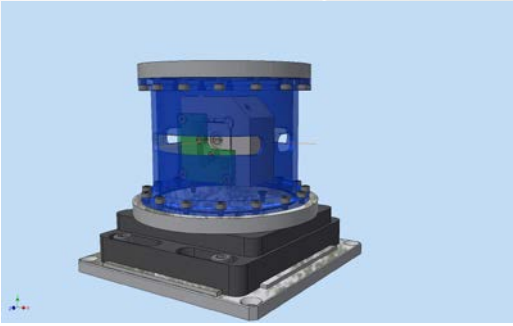

- SMI Beamline Removable Shielded Pipe Section
- IXS Beamline Sample Chambers
- NSLS Liquid Surface Chamber
- NSLS Modular Sample Environments

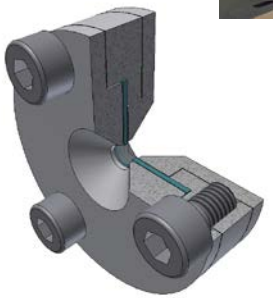

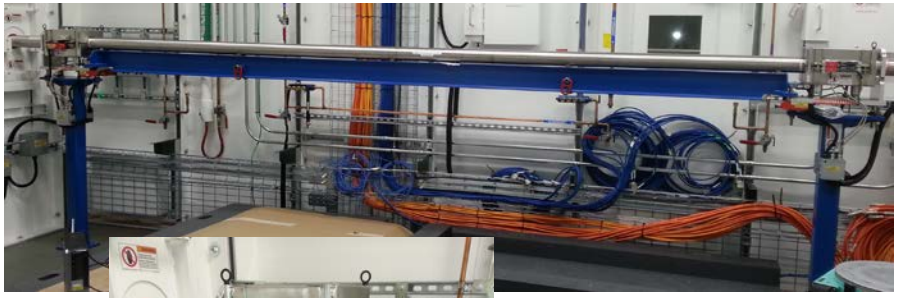

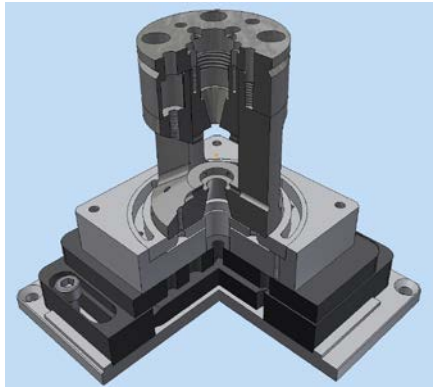

Zhu: Experimental and Metrology Instruments

I. Ion Beam Figuring Station

II. High Temperature and High Pressure Reactor Cell

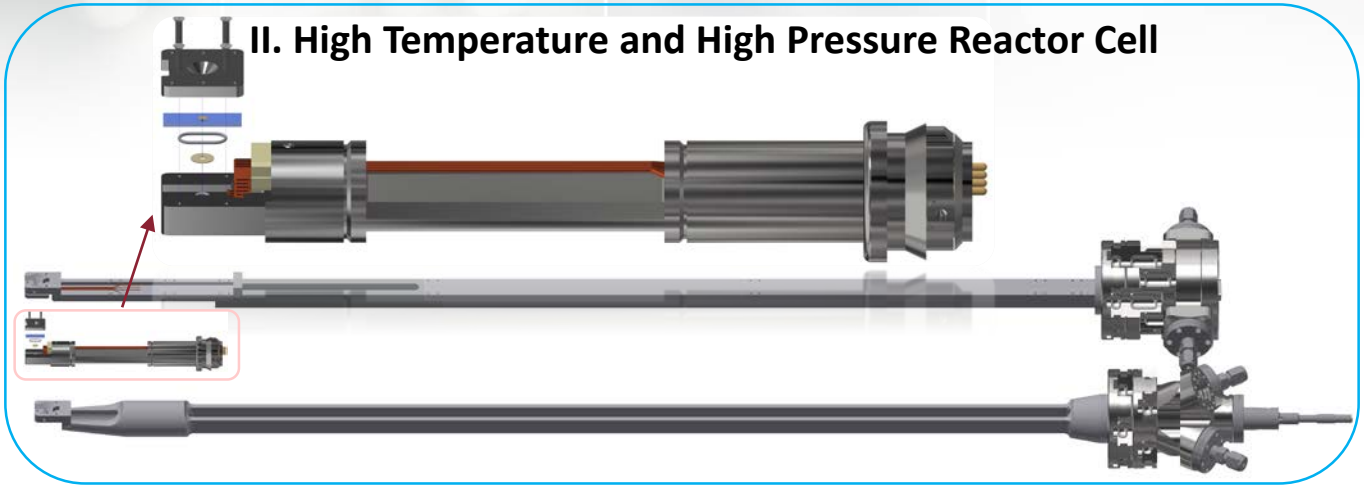

III. CDI 8-Meter Diffractometer

Antonelli: Endstation Systems

In-house design

- Vacuum chambers
- Vacuum mechanics
- Beam conditioning
- Optics positioners
- Detector positioners
- On-axis microscopes
- Cable mgmt. systems

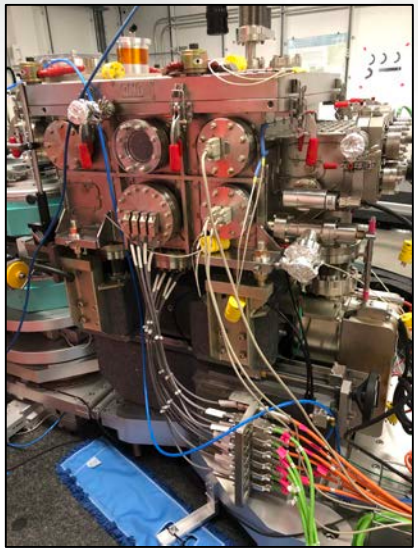

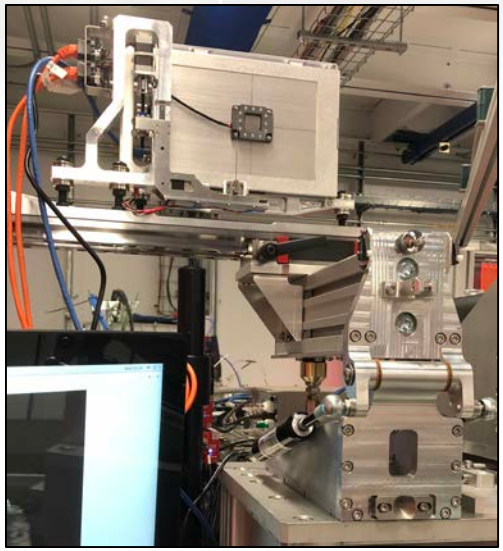

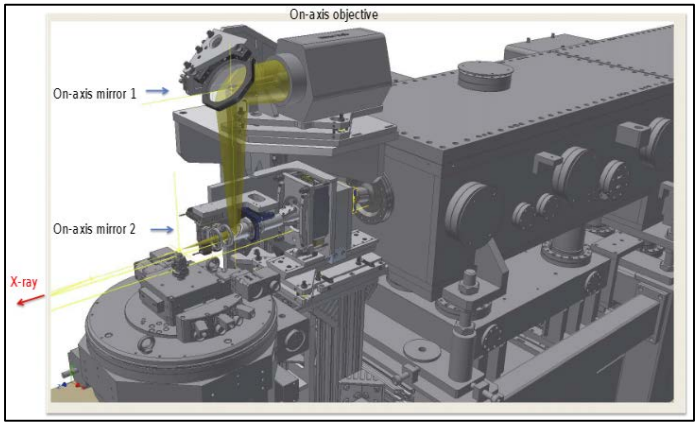

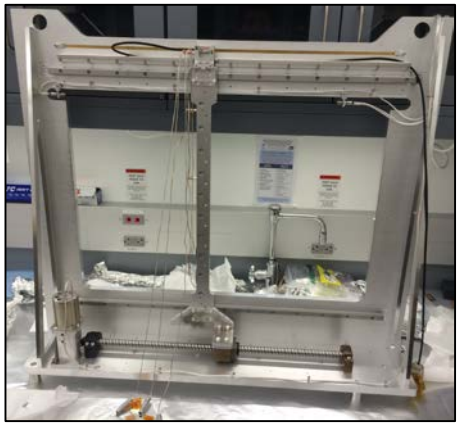

Antonelli: Sample Environments

In-house design
- Positioners
- Chambers
- Holders
- Windows
- Prep./storage
- Cryo. / Furnace
- Thermal mgmt.

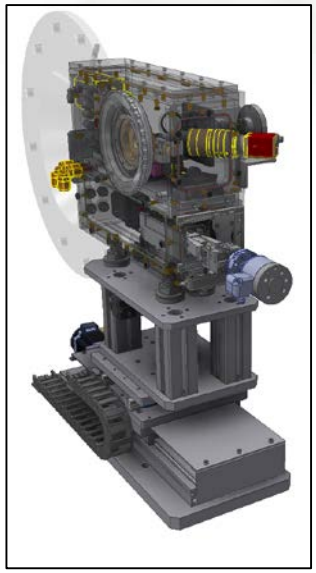

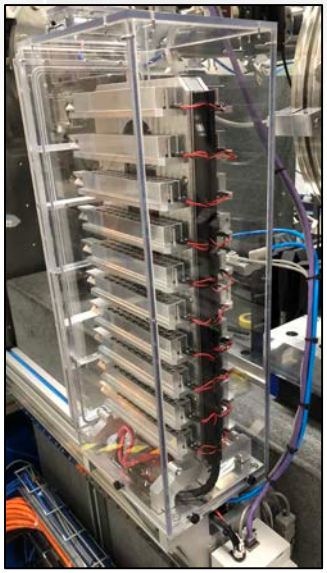

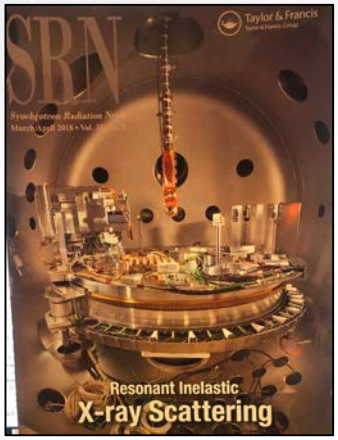

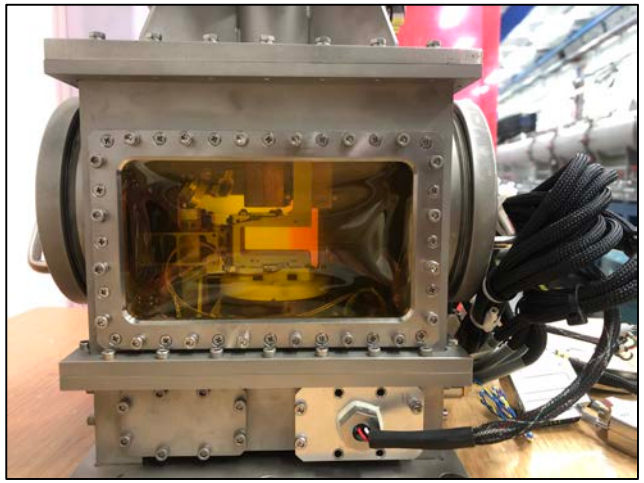

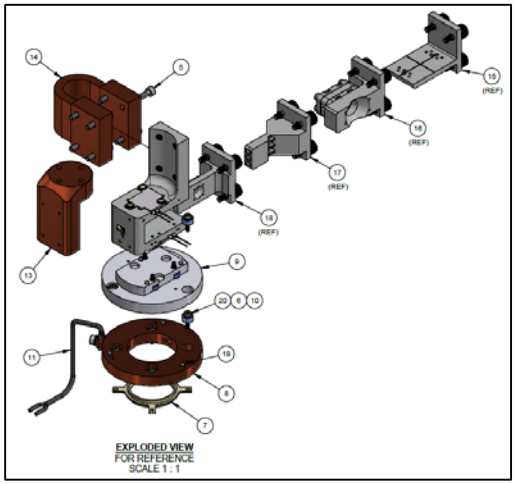

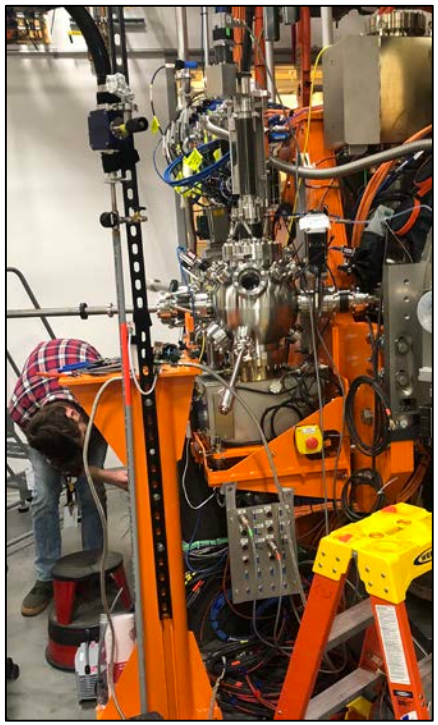

Antonelli: Miscellaneous

- Electronics integration
- PCB layout
- Flexure Design

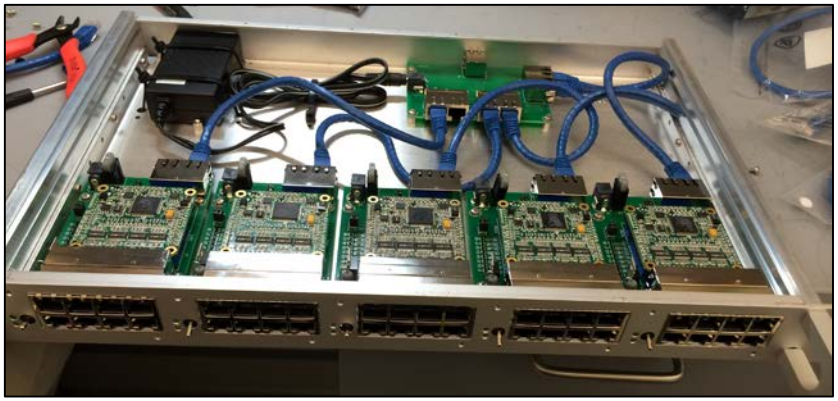

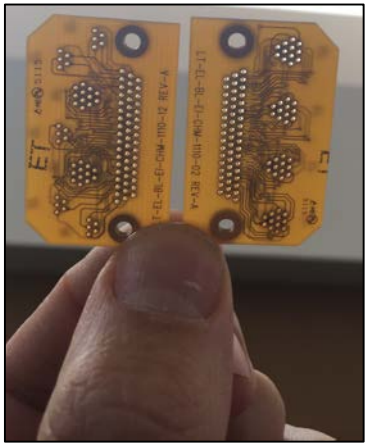

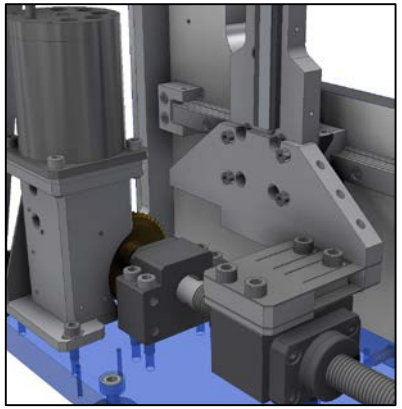

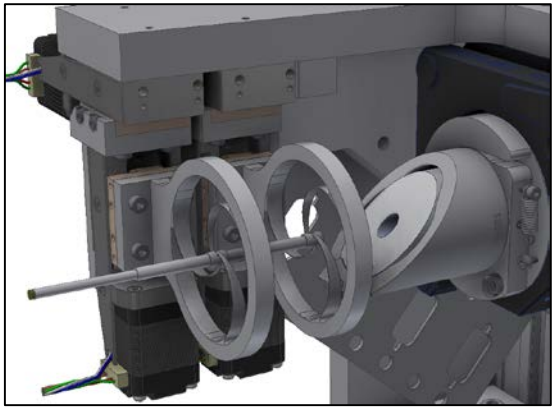

Bacescu: Soft X-ray Endstations

I. Tardis, scattering endstation (CSX, 23-ID-1)

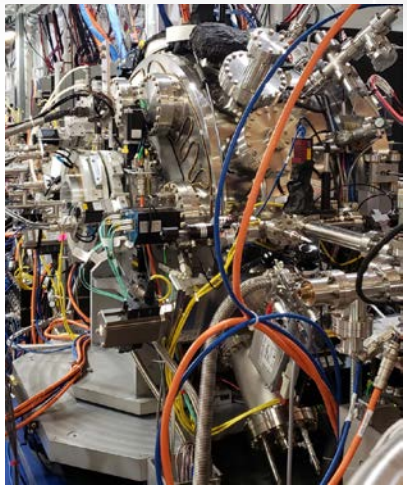
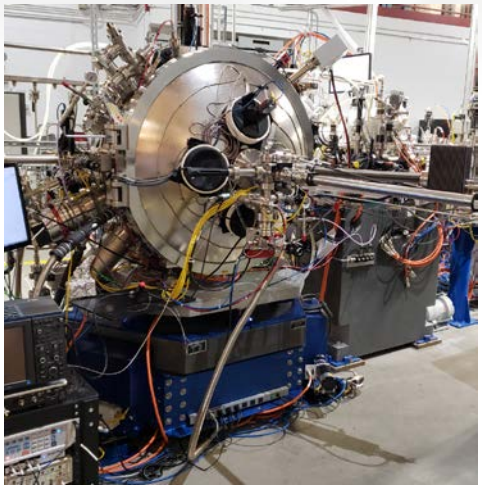
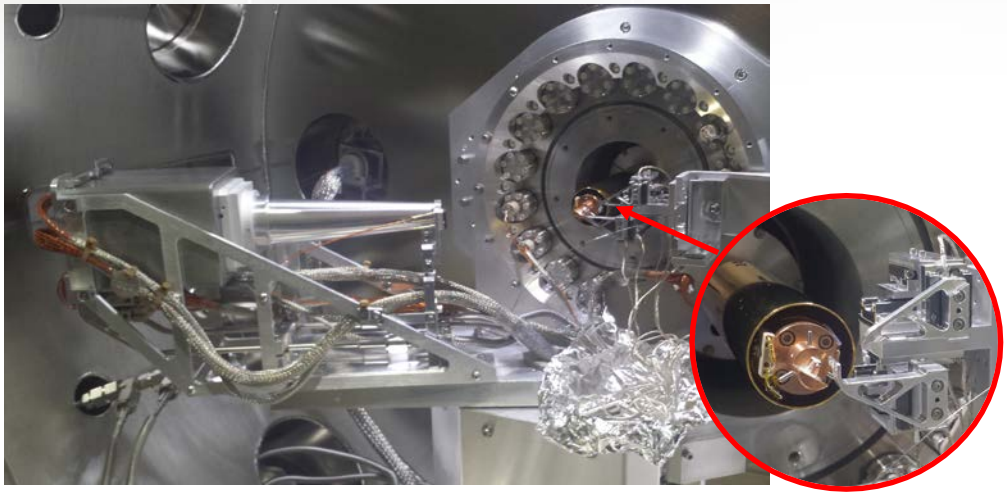

II. Holography endstation (CSX, 23-ID-1)

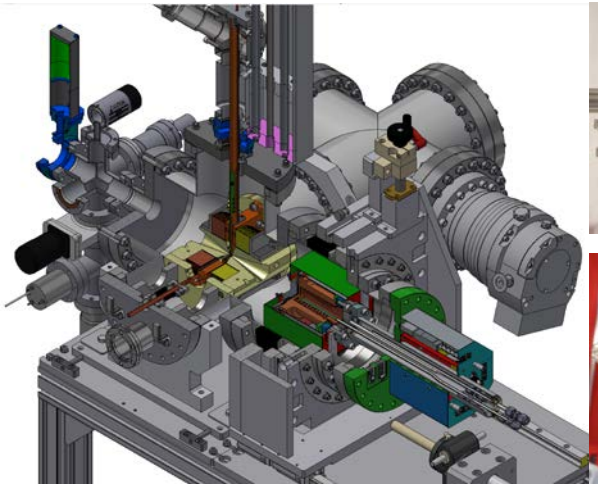
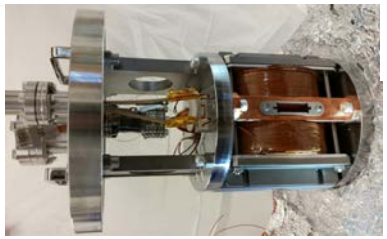
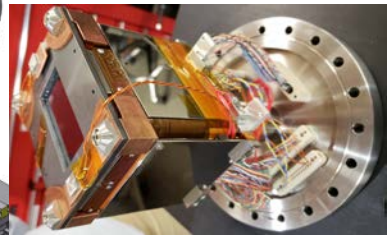

III. In Situ and Operando Spectroscopy (IOS, 23-ID-2)

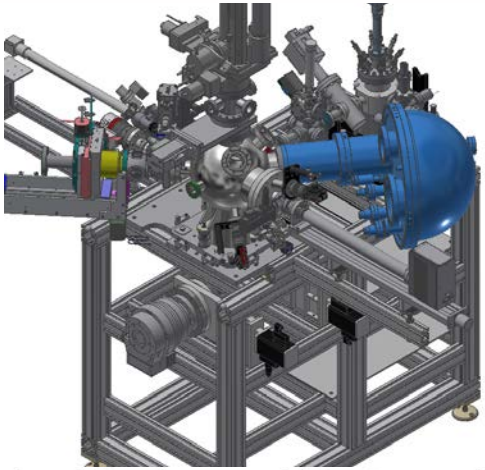

Bacescu: Hard X-ray Endstation

I. (GI)SAXS, WAXS endstation (SMI BL, 12-ID)

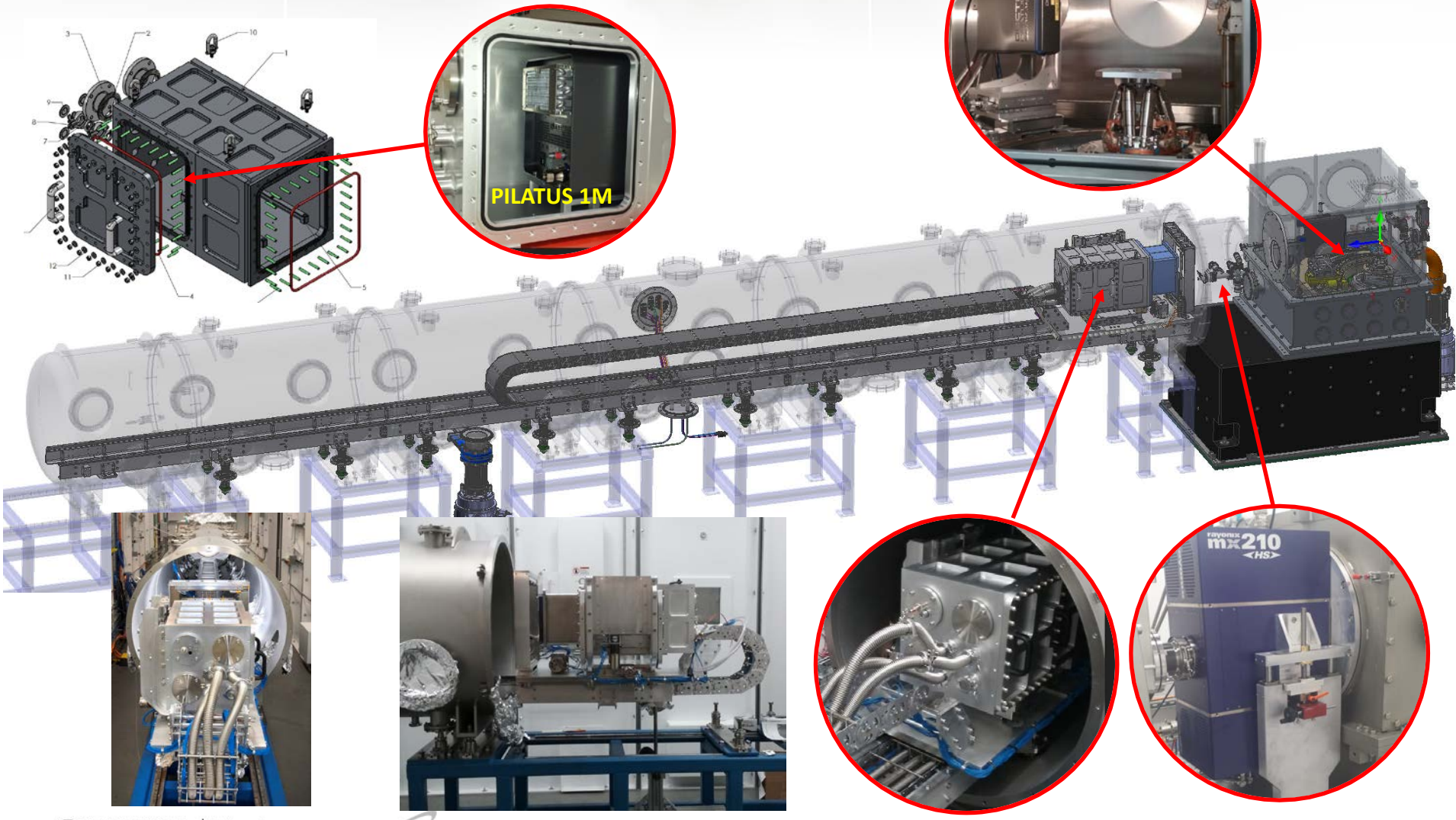

Eng: Endstations & Other

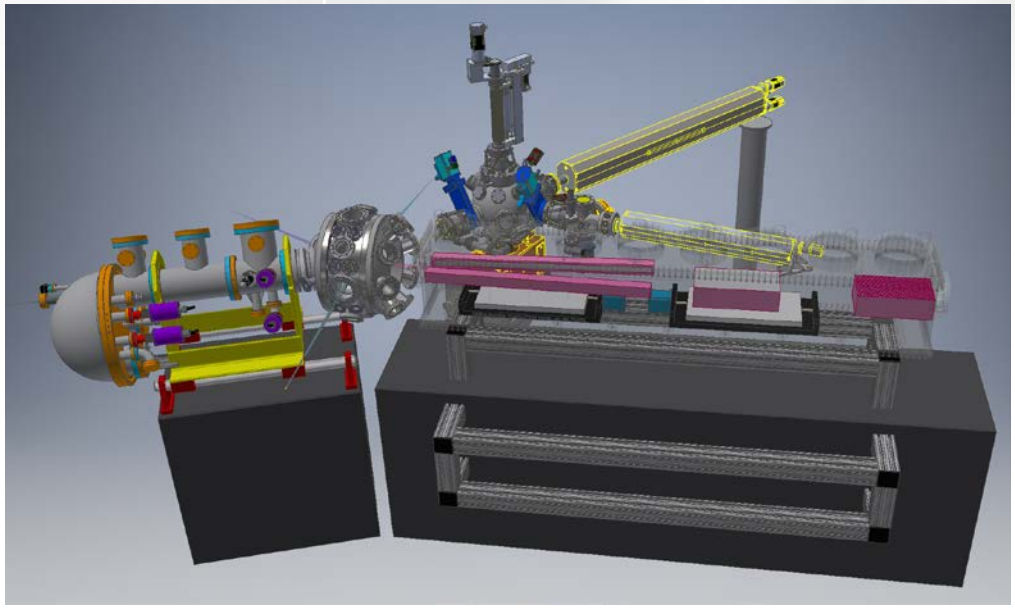

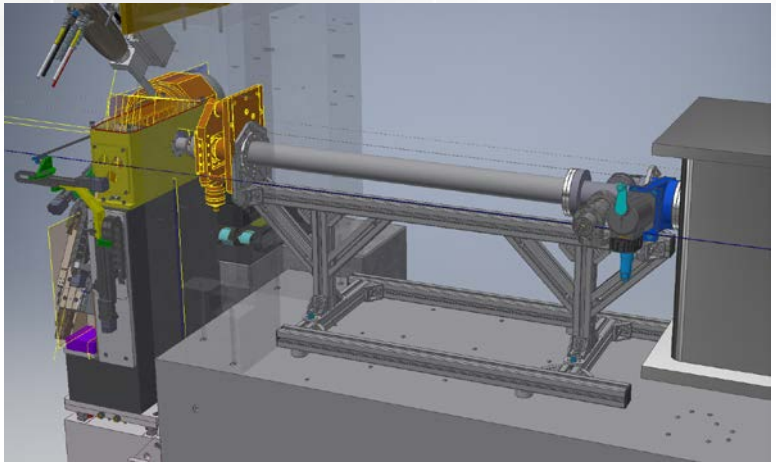

- IOS-INSPIRE AP-PES and RIXS Endstation (23-ID-2)
- Sample Holders
- Expandable Nitrogen Purge Sections, Clamps, Supports, Covers

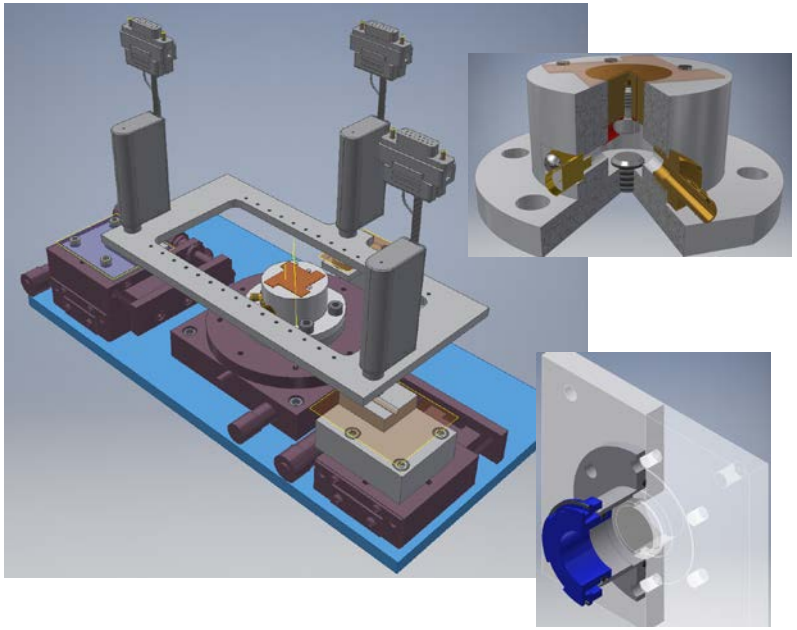

Lucas: Endstations

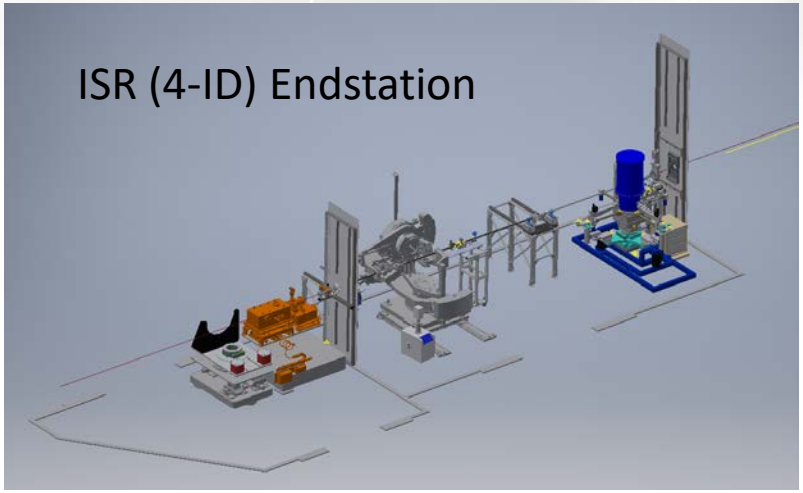

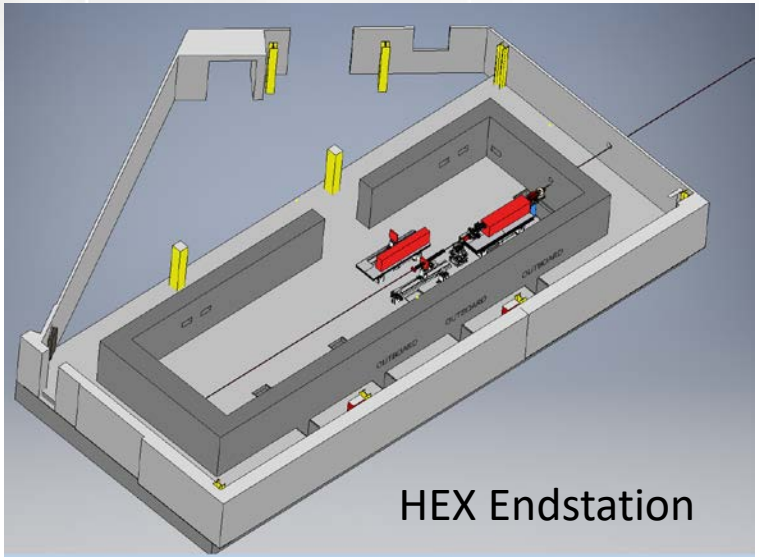

ISR (4-ID) 6-Circle Diffractometer

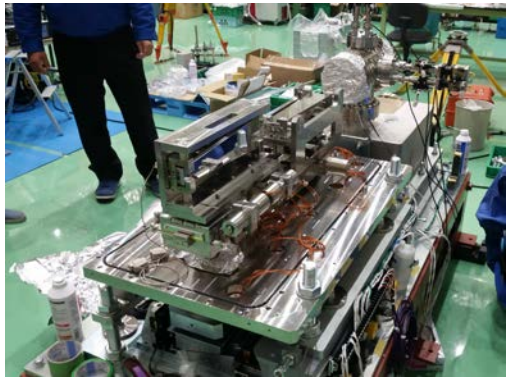

ISR (4-ID) KB Mirror

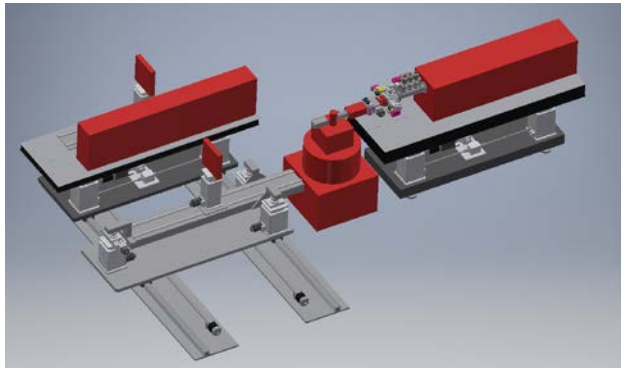

HEX Experimental Station

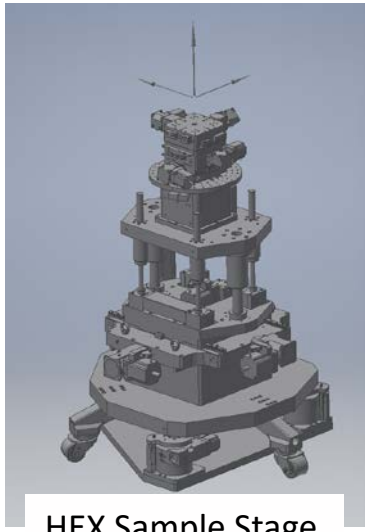

HEX Sample Stage

Analysis examples

O'Hara: Finite Element Analyses

Analyses Performed

End Station	Beamline	Front End
Beam Stops Vacuum Chambers Sample Holders Samples Structural Supports Stability Analyses	Masks Photon Shutters Monochromators Mirrors Filters Windows Lenses Vacuum Chambers Structural Supports	Masks Photon Shutters

O'Hara: Finite Element Analysis

Types of Analyses; Pre- and Post- Processing of Data

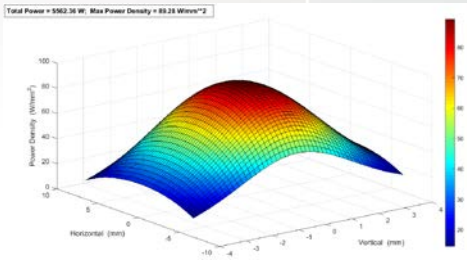

Power Distribution

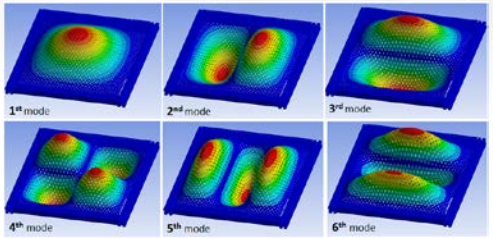

Modal Analysis

Analyses

Thermal
Mechanical
Coupled Thermal-Mechanical
Thermal Transient
Vibration
Elastic-Plastic Analyses
Anisotropic Material Properties

Pre and Post Processing

Power Distribution
3D Power Input
Curvature
Slope Errors
Curve Fitting

Transient Thermal Analysis

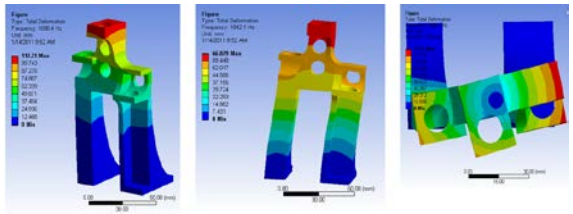

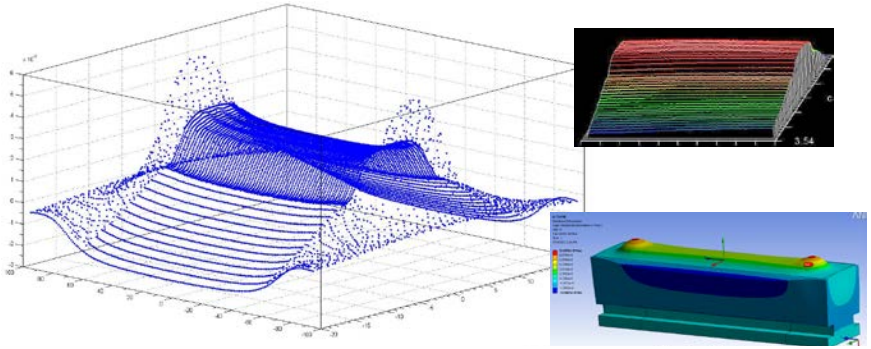

Mirror Deformation due to Internal Pressure

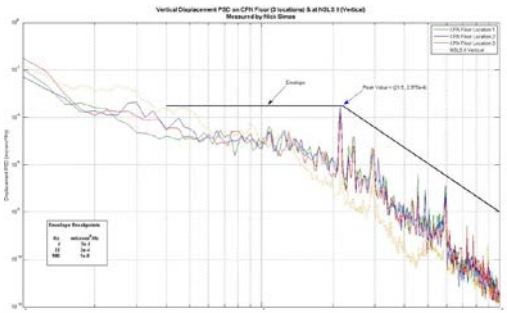

Using Measured Floor Vibrations as Input

O'Hara: Finite Element Analyses

Endstation Vacuum Chamber

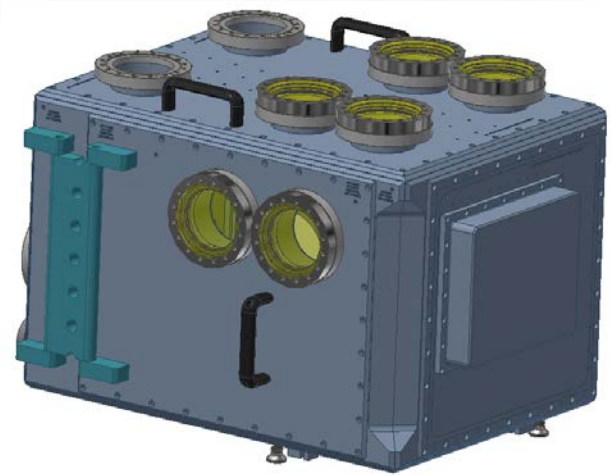

Vacuum Chamber

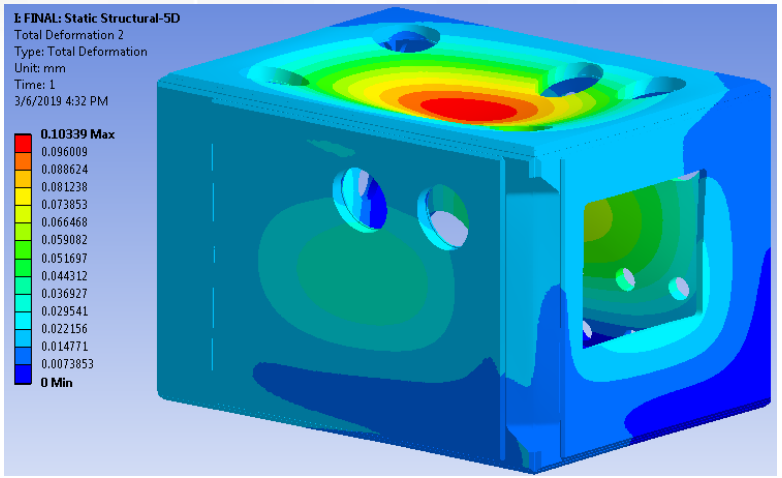

Deformation in Chamber

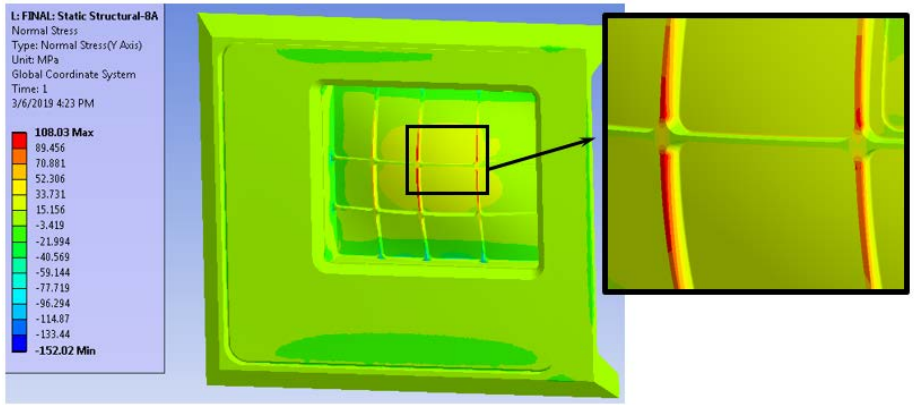

Tensile Stress in Rib

O'Hara: Finite Element Analyses

Monochromator Crystal Bending

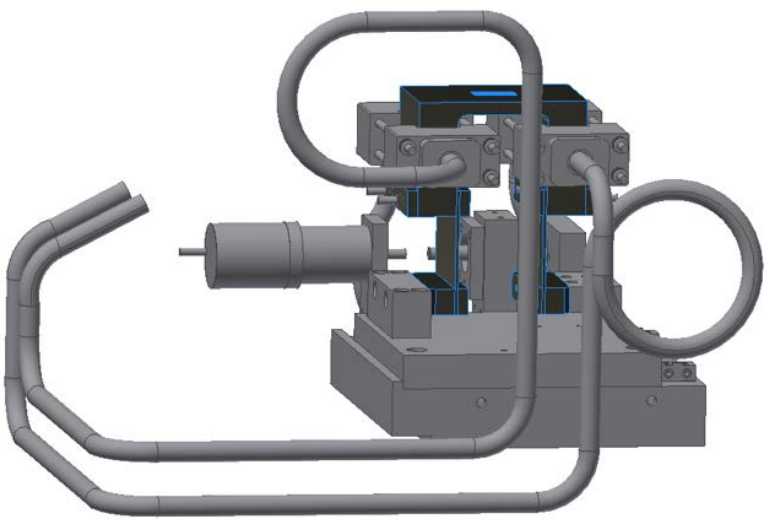

Mono Crystal Bender with Cooling

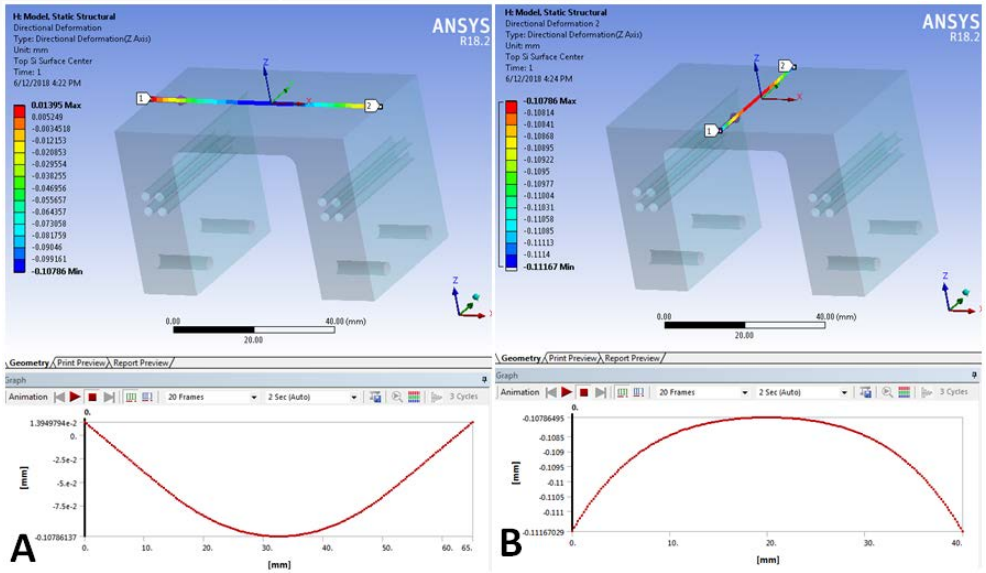

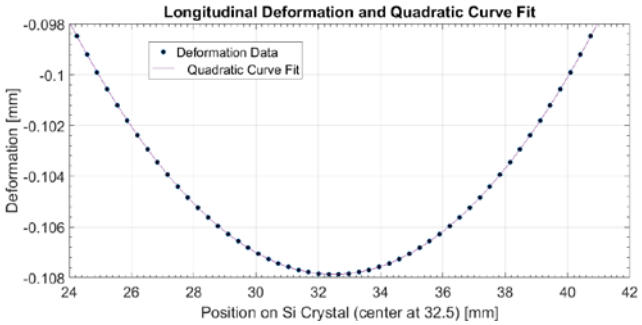

Curvature Calculated by FEA is Nearly Perfect Quadratic Curve

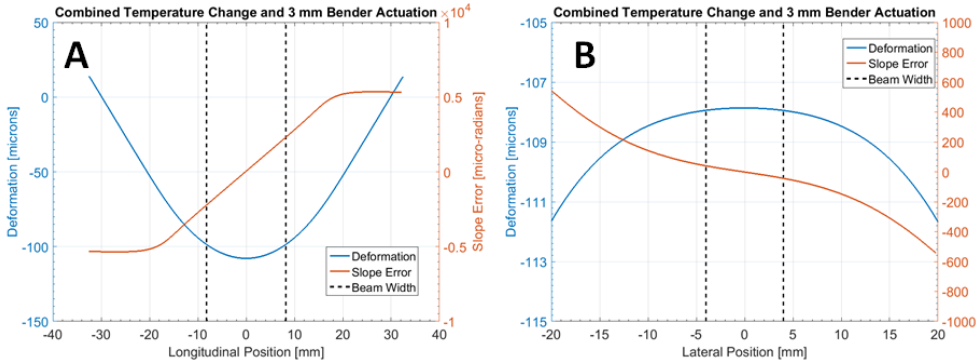

Longitudinal and Lateral Deformation & Slope Error

O'Hara: Finite Element Analyses

Front End Mask Thermal Analysis

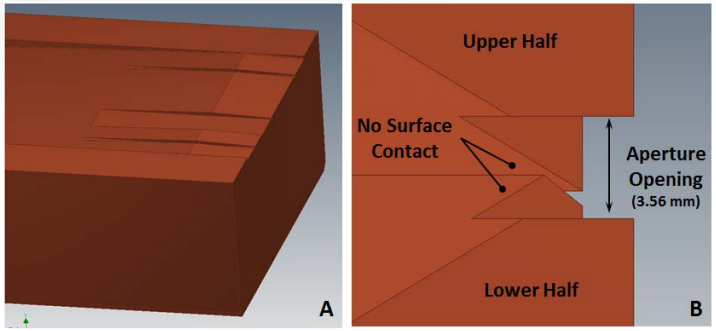

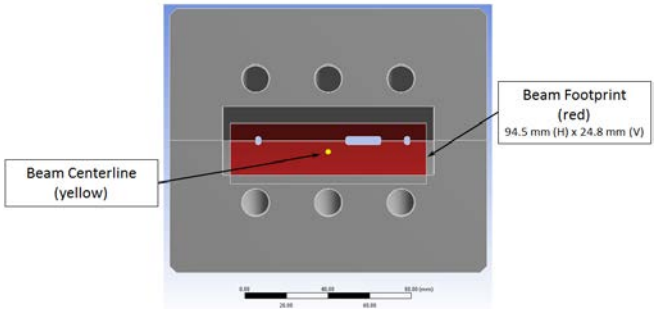

Total Power = 39.4 kW
Mask Taper Angle = 1.8°

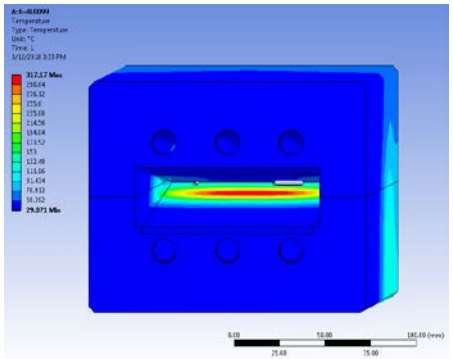

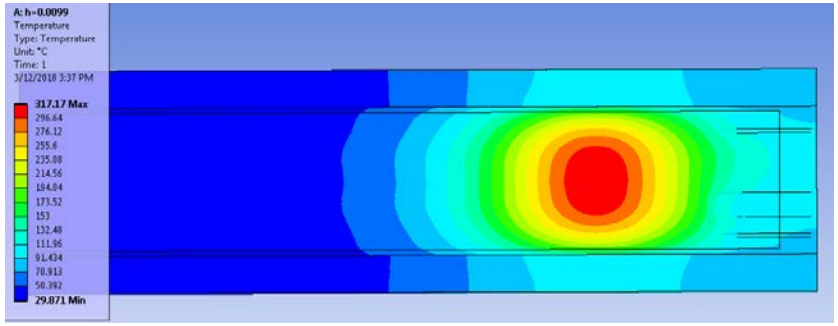

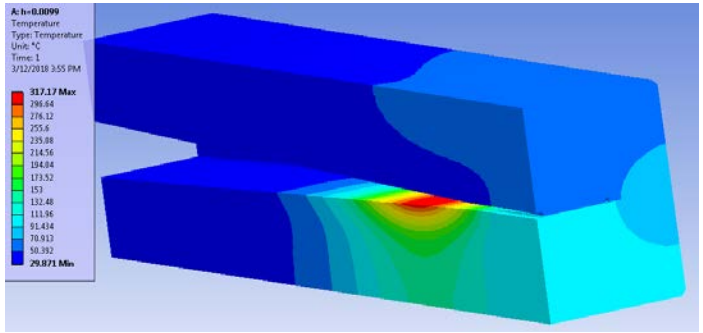

O'Hara: Finite Element Analyses

White Beam Mask & Pre-mask Analysis

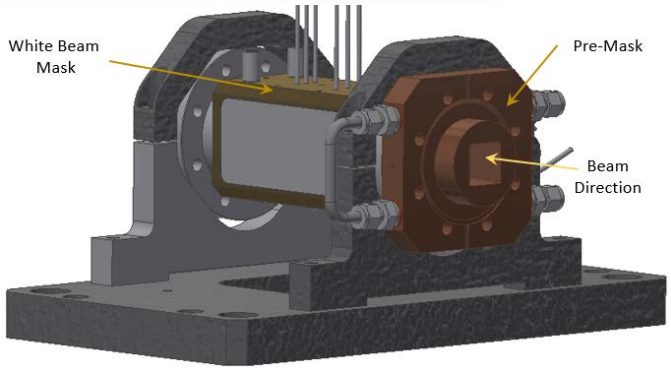

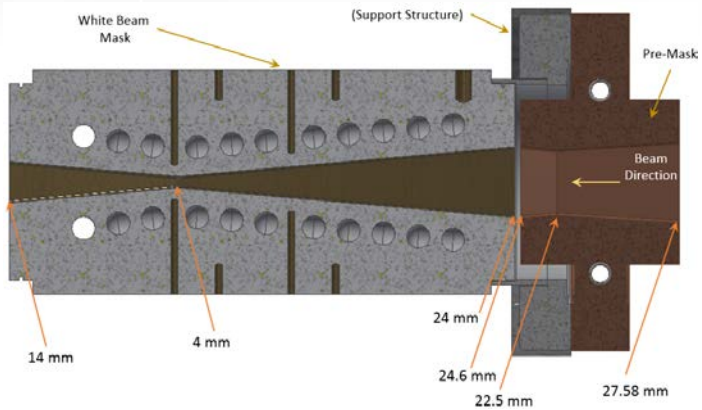

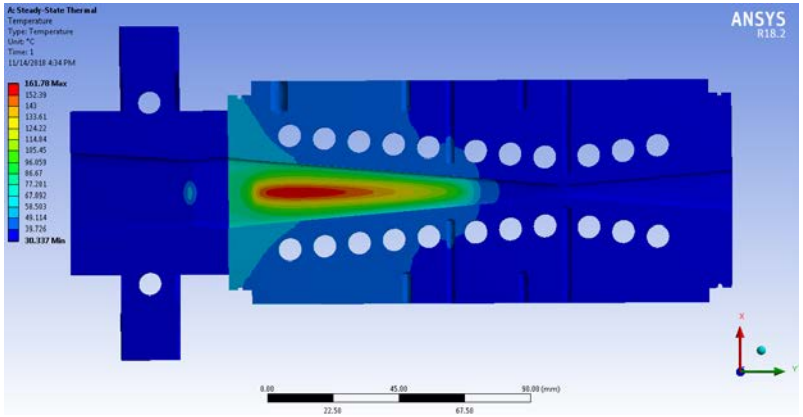

Thermal Results

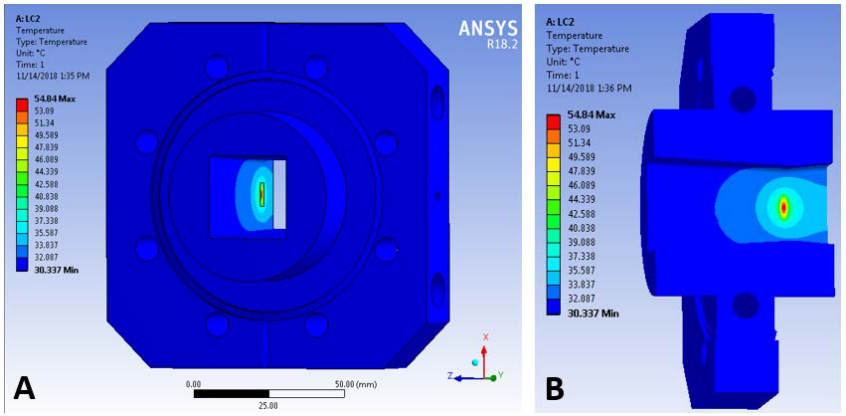

Thermal Results

O'Hara: Finite Element Analyses

Analysis of Sample Holders and Samples

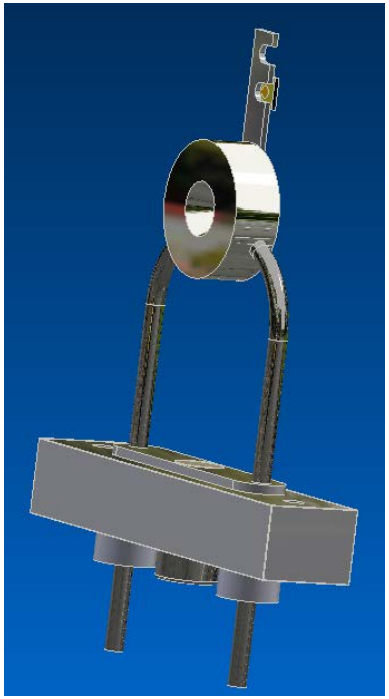

Cryo-cooled Sample Holder

Convection Cooled, Tref = -60.0°C
Power Density = 1.2e5 W/mm^3

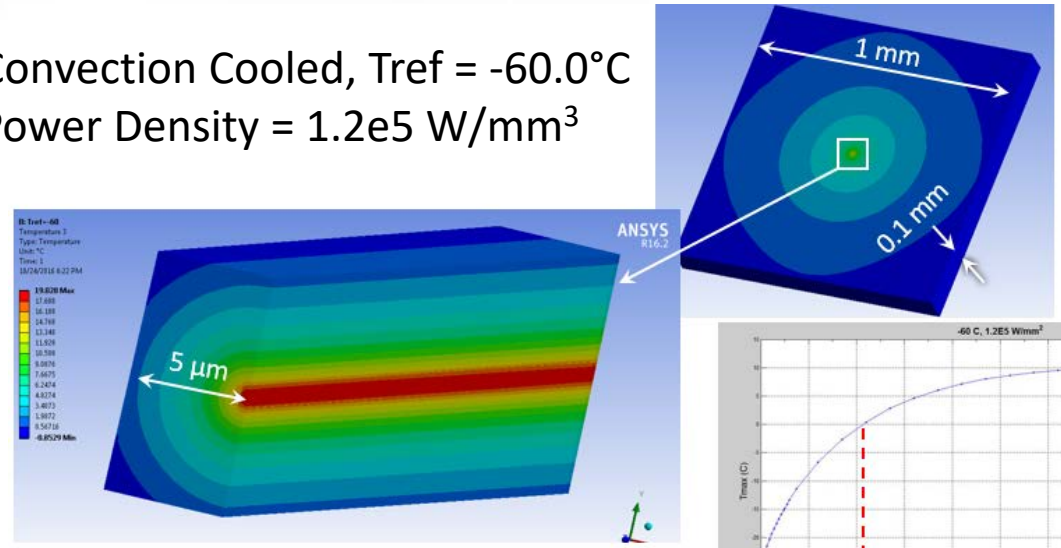

Thermal Results

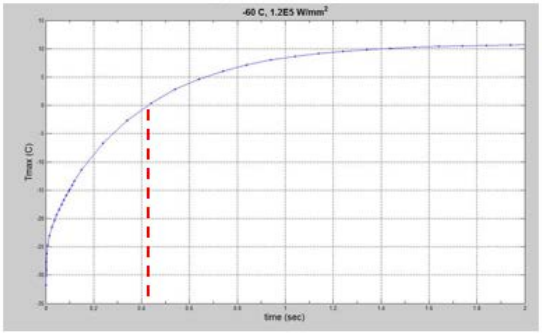

Thermal Transient

≈440 ms to melt the ice (0.0°C)
1 micron square beam melts 100 micron square area at steady-state *(neglecting phase transition)*

Cryostage Sample (Ice)

Lienhard: Analysis

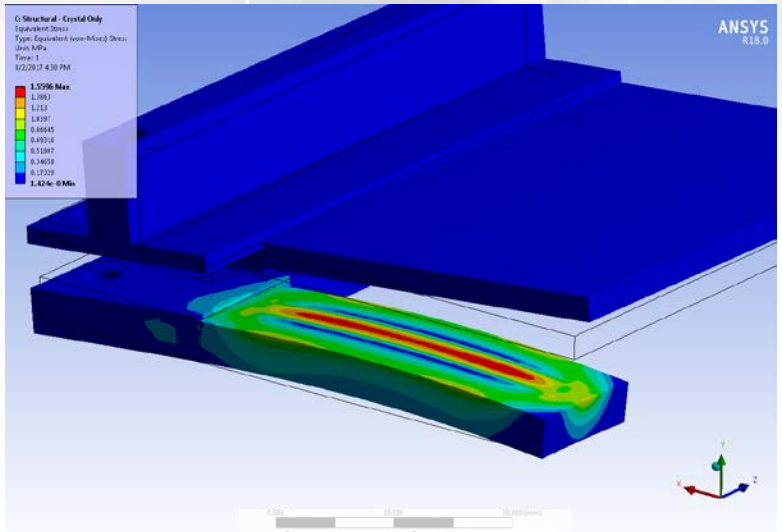

Thermal Stress

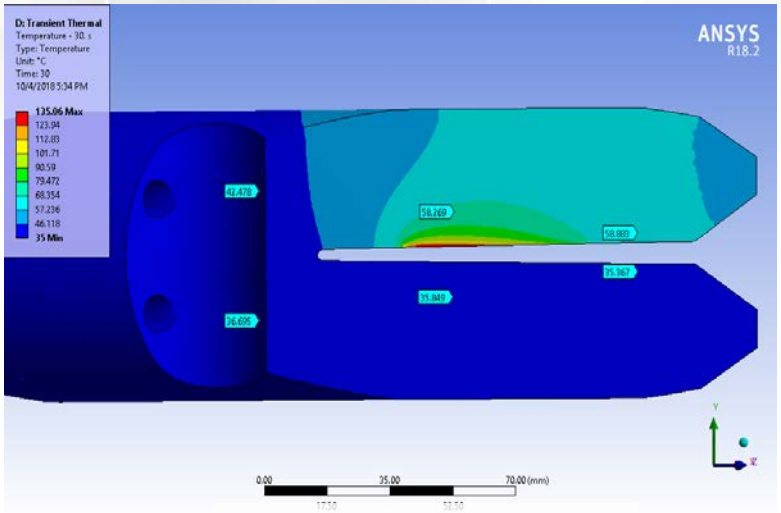

Transient Thermal

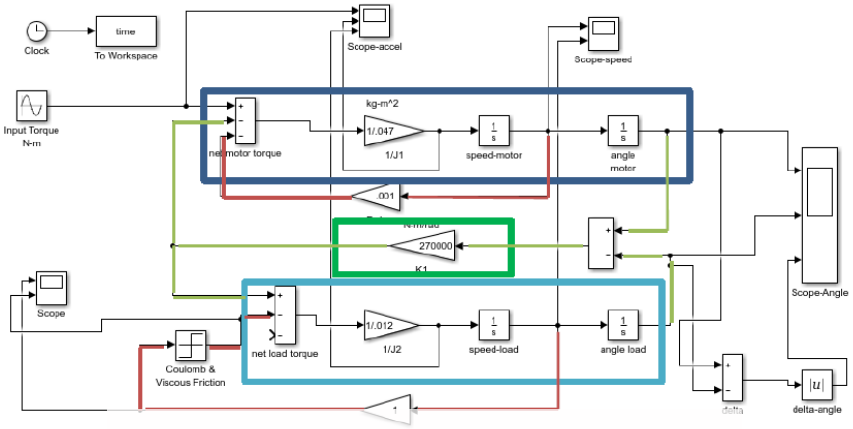

MATLAB Simulink modeling

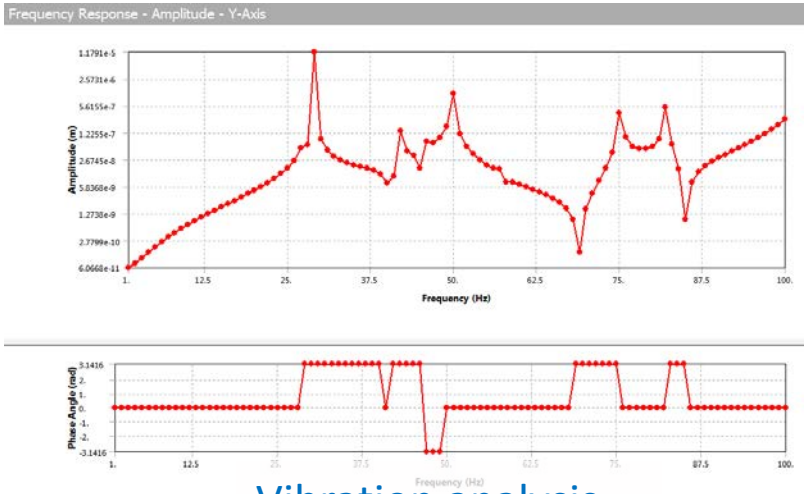

Vibration analysis