National Synchrotron Light Source II

NSLS-II Beamline Development

Erik Johnson

NSLS-II Deputy Director for Construction

29 March 2019

U.S. DEPARTMENT OF ENERGY | Office of Science

BROOKHAVEN NATIONAL LABORATORY

Topics for today

- Status of construction engagements
  - BDN completed with FIS/MET IRR
  - NPB ramping up HEX construction
- Instrument Execution Plan Development (IEPD)
  - ARI/SMF, INF, QIX/INSPIRE, PLS
  - Pushing forward with CDI design development
- MIE Proposal
  - CD-0 in December 2018
  - $60M proposal based on CDI, ARI/SMF
- Exploring new engagements
  - NSF Mid-scale proposal (INF)
  - DOE-NE (MRE)
  - Strategic planning workshop – October 2019

Beamlines Developed by NSLS-II - BDN

Operations funded – Julian Adams portfolio manager

January 2019	BAC	AC	CPI	Operations
Project management	$5.3M	$5.8M	0.91	
CSX canting	$0.2M	$0.2M	1.3	In use since install
IDs and frontends	$1.3M	$1.3M	1.0	Supporting ISR, SMI, SIX & ESM
CMS	$5.9M	$5.8M	1.02	General user operations
TES	$4.4M	$4.1M	1.06	General user operations
XFM	$6.2M	$7.0M	0.97	General user operations
QAS	$5.8M	$5.9M	0.98	General user operations
FXI	$7.6M	$7.2M	1.07	General user operations
PDF	$4.7M	$5.0M	0.95	General user operations
FIS/MET	$4.8M	$5.3M	0.91	In technical commissioning

Estimate At Complete	BAC	AC	Recovered Value	Portfolio value
BDN portfolio	$47.4M	$48.3M	~$25M	~$73M

NSLS-II Partner Beamlines - NPB

Operations and Partner funded – Andrew Broadbent portfolio manager

Beamline		Status
XFP	X-ray Foot-printing - Case Western Reserve University	General User Operations
NYX	Protein Crystallography - NY Structural Biology Center	Science Commissioning
SST1&2	Spectroscopy Soft and Tender - NIST	Technical Commissioning
BMM	Beamline for Materials Measurement - NIST	General User Operations

NPB Costs	XFP		NYX		SST1&2 + BMM	
NPB	AC	CPI	AC	CPI	AC	CPI
NSLS-II	0.56M	1.02	1.70M	1.13	1.76M	0.74
SPP	2.00M	0.96	1.98M	1.12	9.96M	0.92
Partner	0.86M	1.00	12.95M	1.00	31.77M	1.00
Total	3.42M	0.97	16.63M	1.02	43.49M	0.97

NSLS-II
~$6M
SPP
~$14M
Overall
~ $66M

HEX	TPC	% CMP	SPI	CPI
NSLS-II	$5M	21.0%	1	1.13
SPP	$25M	4.8%	1	1.08
Total	$30M	7.5%	1	1.11

16 months into project
Accelerated execution
approved by NYSERDA
Finish December 2021

NSLS-II Beamline Buildout

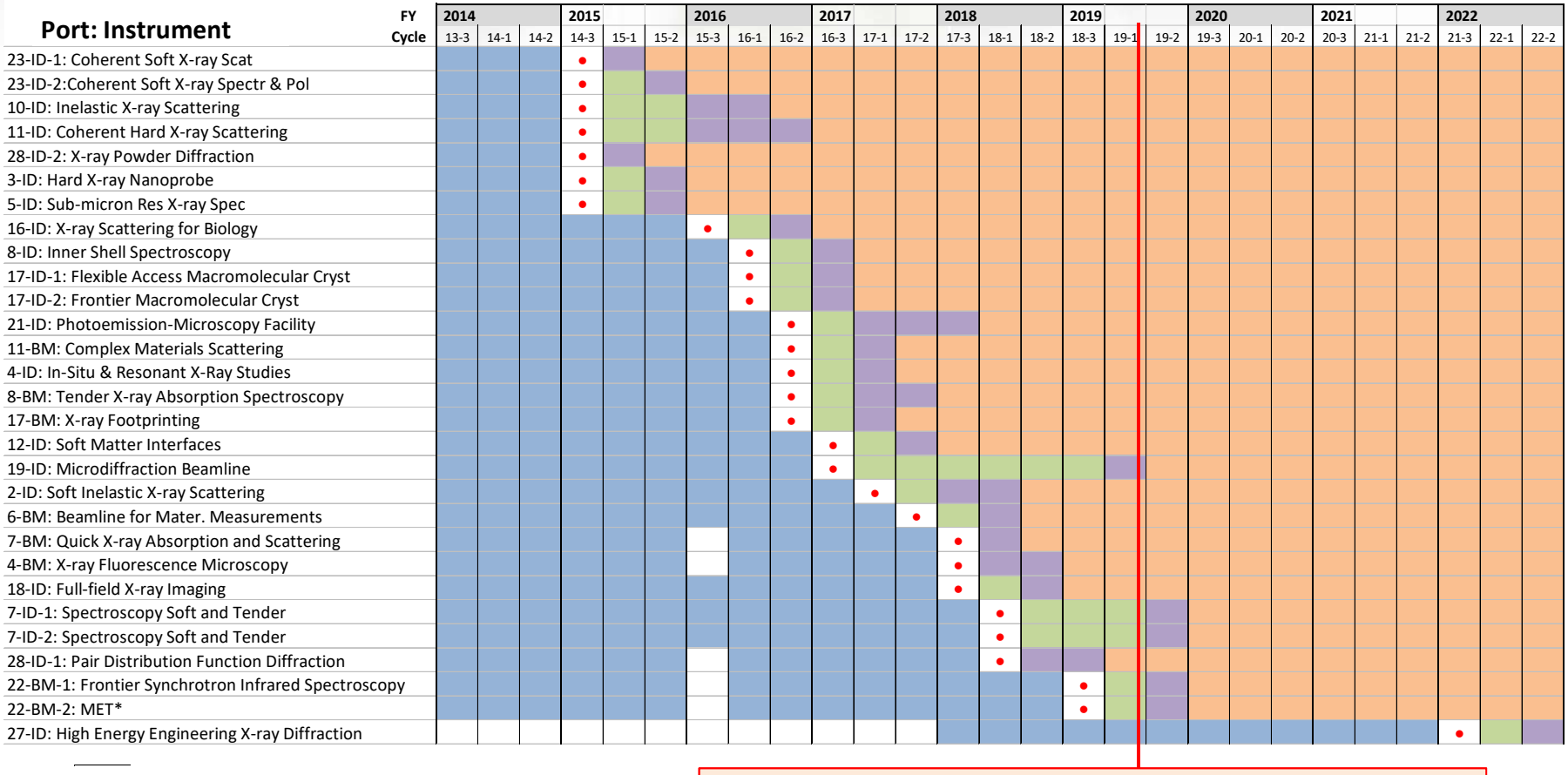

- Development
- ● First light - In Service
- Technical Commissioning
- Science Commissioning
- General User Operation

28 beamlines operating/commissioning
– 23 beamlines in GU ops
1 beamline under development

High energy Engineering X-ray beamline - HEX

New York State Energy Research and Development Authority – NYSERDA

Partner beamline with NSLS-II

- Design, construction, procurement installation and commissioning of a beamline for clean energy technology (including battery research) at high energy with -
  - Super Conducting Wiggler
  - Beamline optics
  - End Station located in a satellite building constructed for HEX at NSLS-II.
- Started September 2017
- Completion planned for December 2021

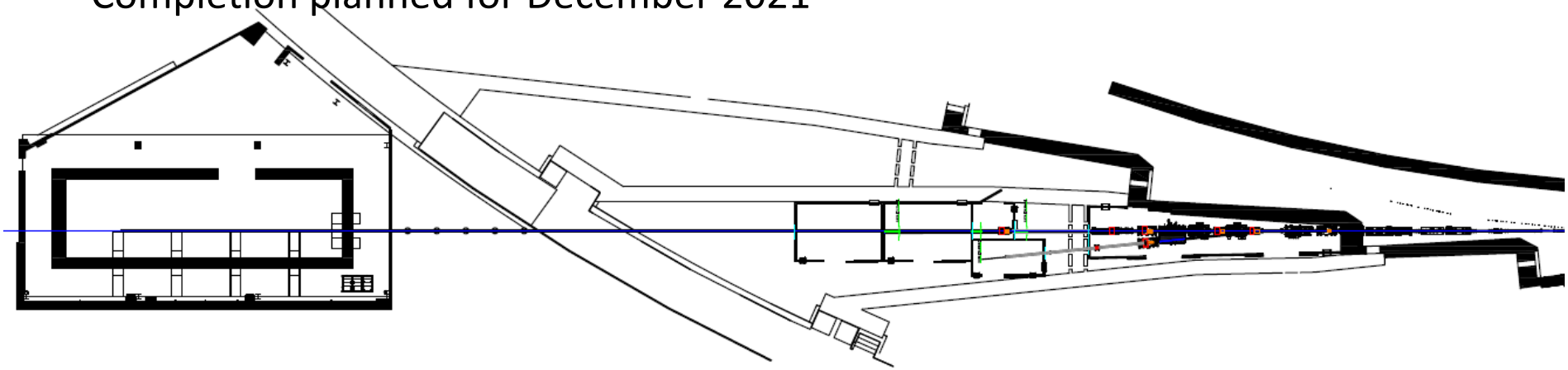

HEX – update since September 2018

- MS #7 Feb 2019: Satellite building contract was awarded to E.W. Howell.
  - Anticipate start of heavy construction during April shutdown
- Superconducting wiggler procurement is 'on the street'
  - Anticipate receiving bids mid to late April, Award in the May/June timeframe
- MS #6: (and go/no-go #3) "FDR" scheduled for April 1&2
- Lead Scientist, Michael Drakopoulos arrived March 11th 2019

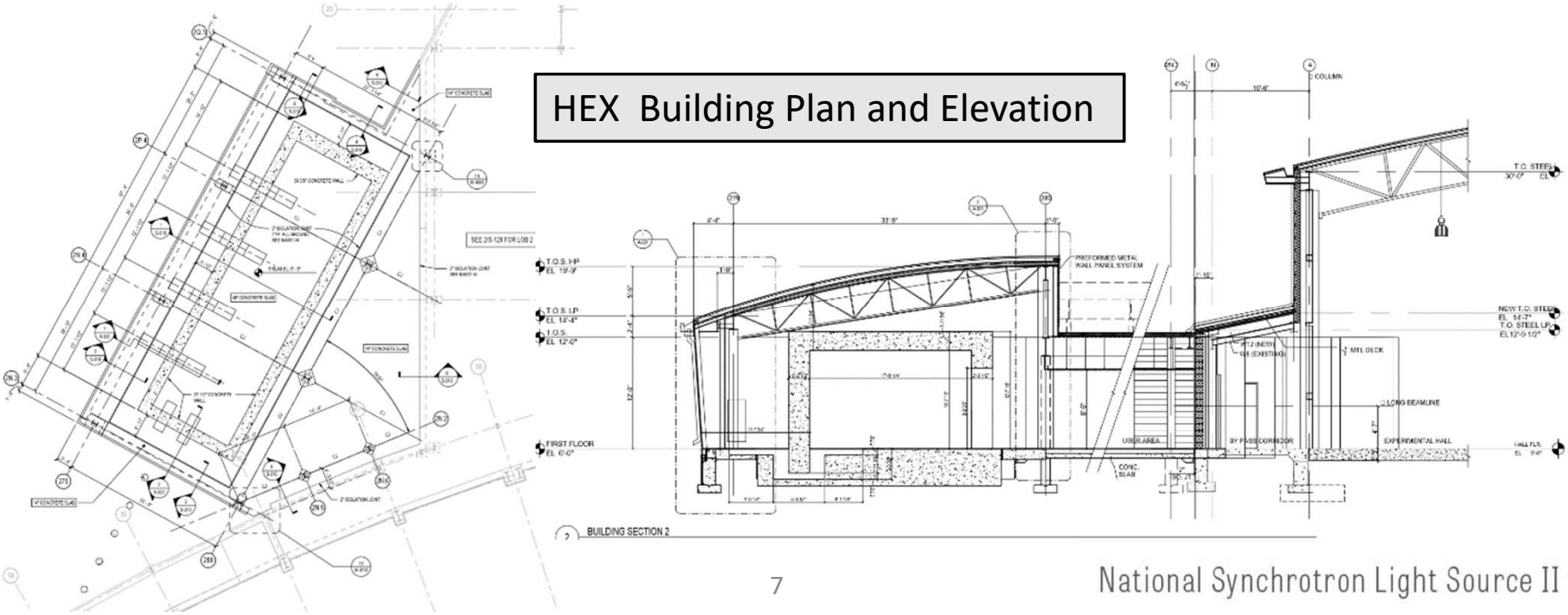

Instrument Execution Plan Development

- CDI design has been pursued under operations to decide best configuration and system requirements
  - Held Conceptual Design review October 25-26, 2018
  - Strong endorsement for long beamline configuration

Long version of CDI
Located at 9-ID

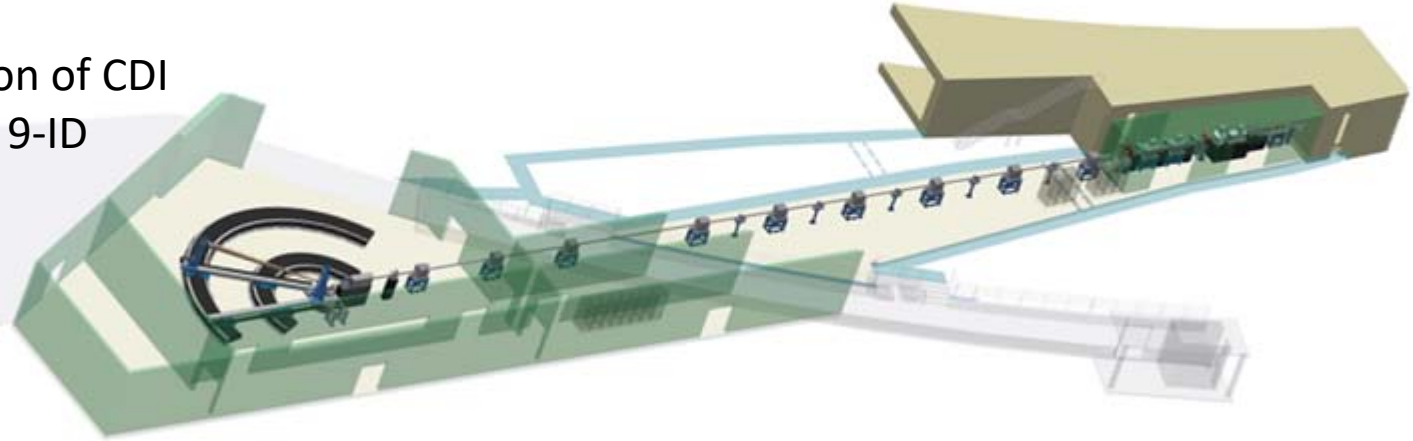

- J-PLS – end-station for use on SMI to develop the PLS community in construction
  - Held a Status Review February 27, 2019
  - Split commissioning approach presented and endorsed
- Other IEPD beamlines brought to a 'hold' state with revised layouts and cost estimates

Liquid Surface Science

- Highest priority for J-PLS program
- Brings a unique instrumental capability to SMI – liquid surface reflectivity cannot be done elsewhere at NSLS-II
- Enables the study of liquid/vapor and liquid/liquid interfaces
- Growing interest in liquids and their interfaces
  - DOE will fund a $100 Million Energy-Water Desalination Hub
  - In 2017, NSF awarded $36.6 million for research into how to provide food-energy-water security
  - DESY planning a "Centre for Molecular Water Science"
  - BNL EFRC on molten salts was funded at BNL
  - DOE funded multiple EFRC projects related to water

J-PLS LAYOUT in Hutch B at SMI

Ben Ocko - Feb 2019
J-PLS Status Review

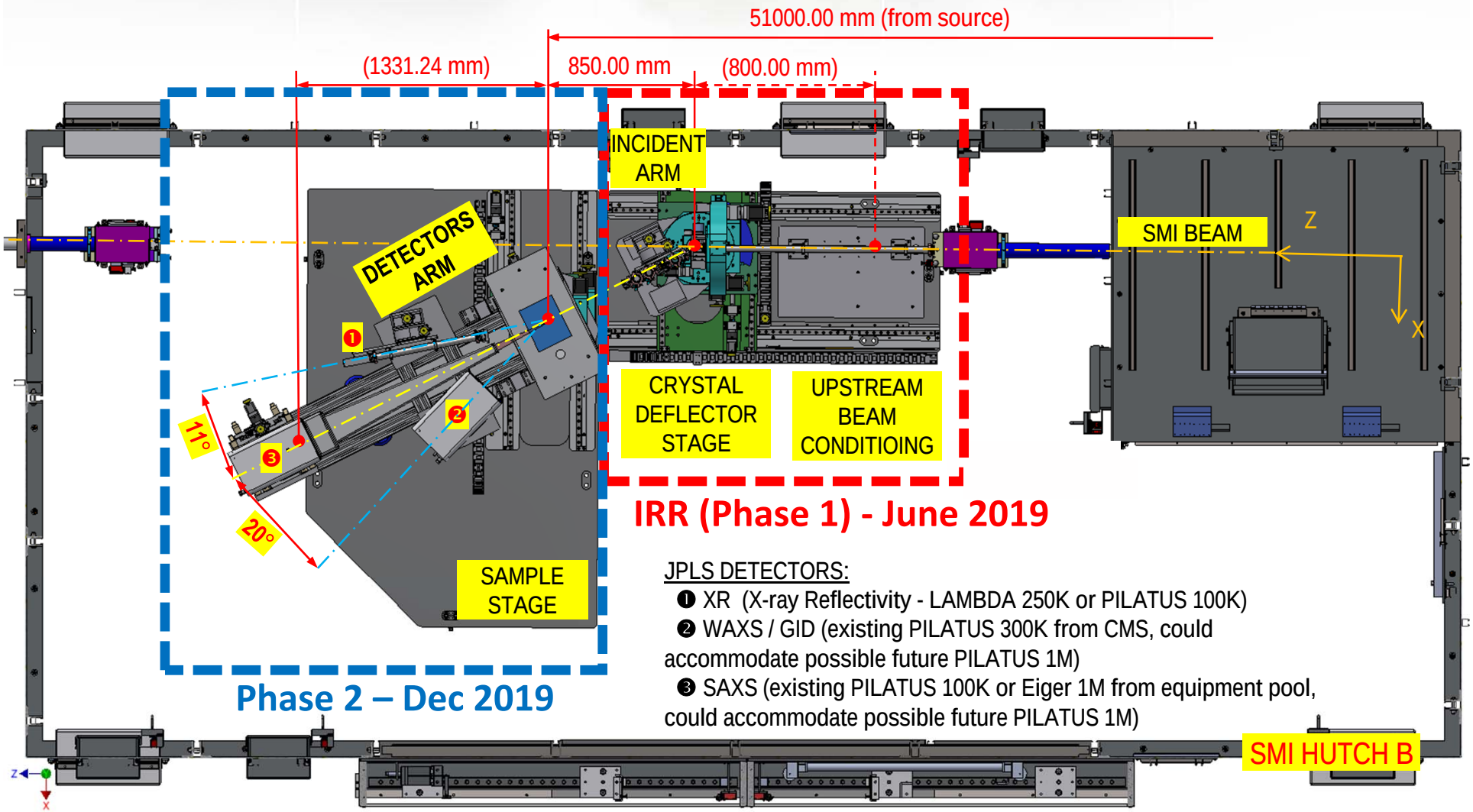

JPLS DETECTORS:

❶ XR (X-ray Reflectivity - LAMBDA 250K or PILATUS 100K)

❷ WAXS / GID (existing PILATUS 300K from CMS, could accommodate possible future PILATUS 1M)

❸ SAXS (existing PILATUS 100K or Eiger 1M from equipment pool, could accommodate possible future PILATUS 1M)

CDI Design goals

- Flexible illumination to provide best-in-class ability to tailor illumination to the sample
  - Provide control of spot size and coherence properties to maximize signal
  - Allow for phase structures in the illumination
- *Provide a stable platform for multiple technique coherent scattering measurements*
  - *Provide a flexible detection geometry that embraces multiple detectors*
  - *Detection should permit the application of non-traditional phasing algorithms*
- *Facilitate the measurement of time-dependent phenomena*
  - *Provide fast detectors to target 1 ms and slower dynamics*
  - *Provision for pump-probe measurements: timing and triggering*
  - *Provision for sample environmental cells*

CDI Diffractometer

Yi Zhu– Oct 2018
CDI Conceptual Design Review

Mechanism:

- 7-Axis Goniometer
- Support System
- Scanning Arms
- Elevating Systems

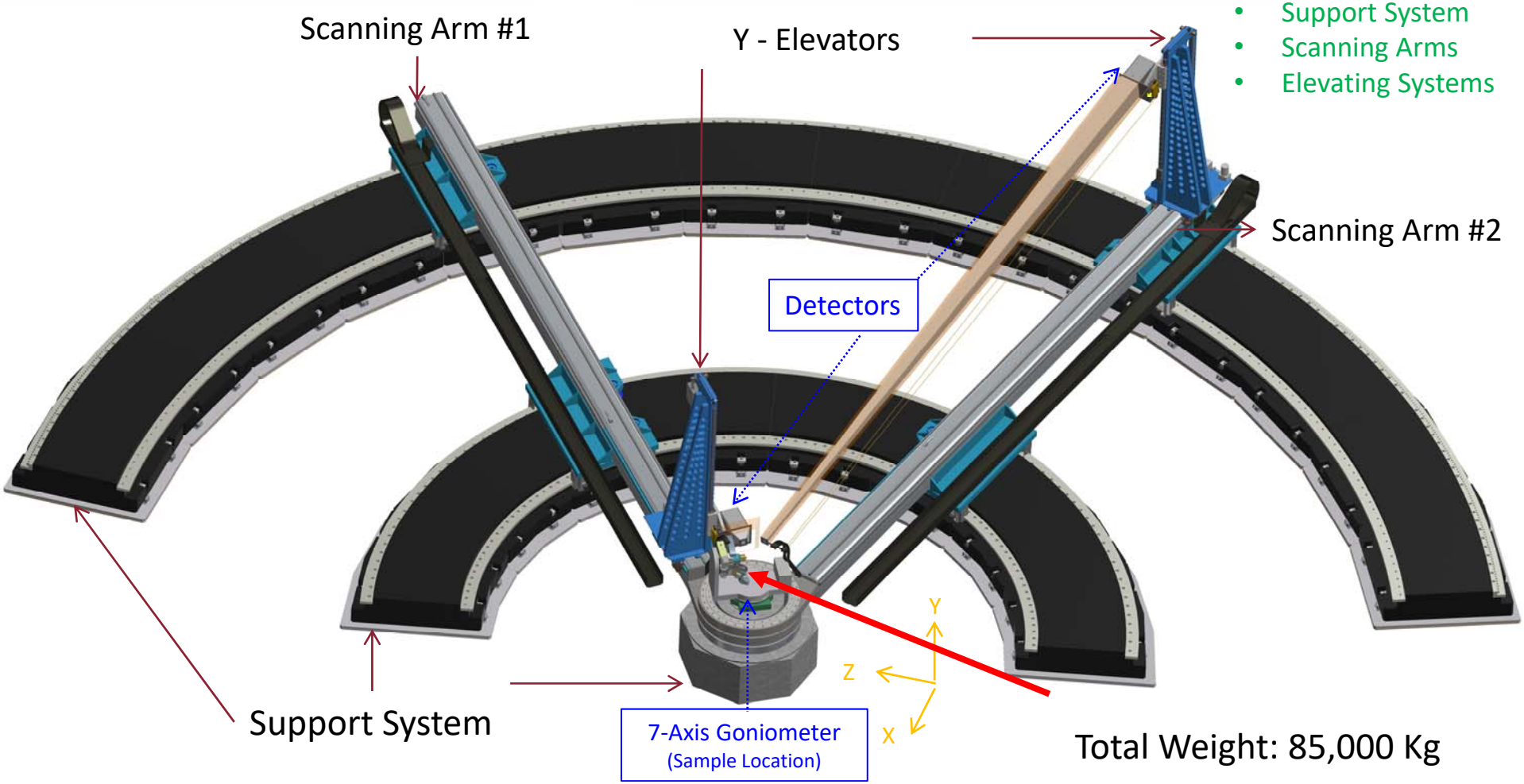

Total Weight: 85,000 Kg

CDI beamline concept is:

- Complementary to APS-U efforts (ATOMIC)
  - as it is specifically designed for imaging single-micron-sized objects at nanometer-scale resolution without translational scanning of the sample
  - foundational capability for time-resolved studies on functional materials;
  - Large and flexible area for mounting special sample environments
- Designed to independently vary the x-ray spot size and coherence lengths to maximize the usability of the NSLS-II source for (partially) coherent imaging and remain competitive with more naturally coherent sources
- Complementary to the suite of NSLS-II imaging and microscopy beamlines by providing the ability to image structure and deformation in larger samples
  - has capability to scan a sample -> Bragg ptychography can be applied to samples that are hundreds of microns in size
  - at high resolution under various environmental conditions
  - sample requirements will be slightly more restrictive than SRX and XFM, but far more liberal than HXN.
  - CDI will be able to conduct concurrent fluorescence imaging on samples larger than 8-10 microns

MIE beamlines

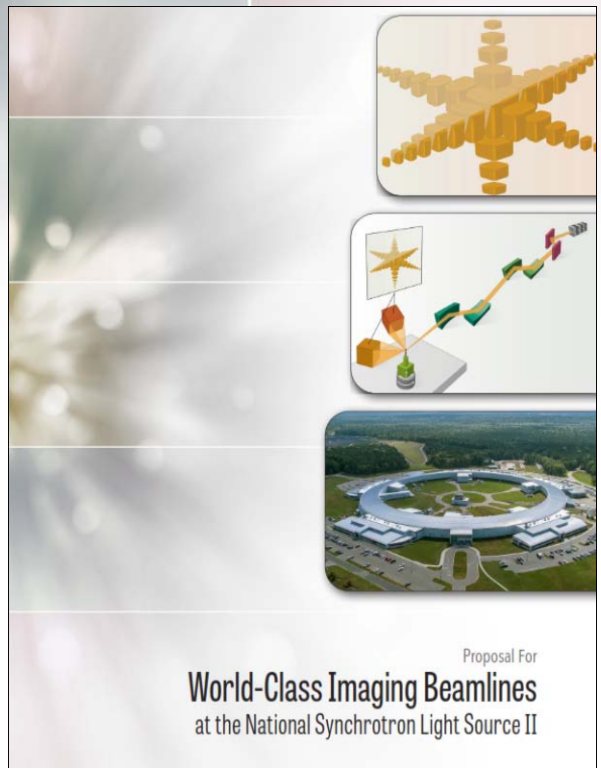

1. CDI: Bragg-CDI lensless imaging down to 5 nm
   - Complements scanning CDI at HXN with full field CDI
   - Unique in the Nation - APS-U does not have a full field BCDI beamline
2. ARI: Scanning probe with simultaneous nano-APPES/nano-RIXS capabilities at ~100 nm resolution
   - Unique in the world in providing information on electronic dynamical behavior
   - NSLS-II is near-diffraction limit in soft x-rays. Beamline will be competitive in the world for the foreseeable future
3. SMF: Soft x-ray STXM with nm-scale resolution via ptychography
   - World-class chemical and elemental imaging
   - NSLS-II is near-diffraction limit in soft x-rays. Beamline will be competitive in the world for the foreseeable future

MIE CD-0 Proposal for Three New Beamlines

- Proposal delivered to DOE-BES Oct 1st 2018
- Broad science case. Example questions:
- How can we understand the functionality of materials to inform the design of new technologies for future energy storage needs?
- How do we elucidate the cooperative interactions of catalyst structures to precisely control chemical reactions?
- How can we understand and control decoherence of quasiparticles and design long-lived, scalable qubits?

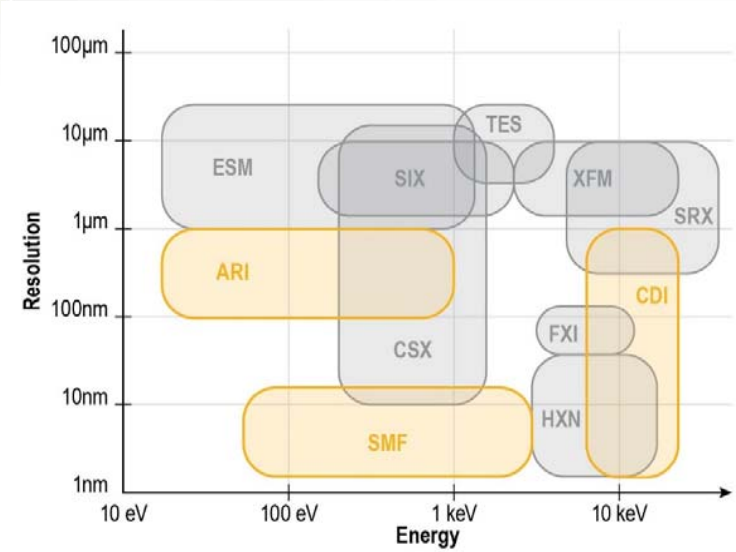

The new beamlines (orange) fill in important gaps in NSLS-II capabilities

These questions (and others) motivate the need for nanoscale imaging of strain, electronic structure and excitations and chemical state information

CD-0 'Mission Need' granted Dec 19th

MIE Lookahead

- Received CD-0 Mission Need
  - Did not receive budget plan from the program (know absolute top of the range $60M)
  - Do not definitively know timeline, or program plans for a timeline
  - There is small amount of funding in the FY20 PBR ($1M)
- Planning Assumptions
  - Next formal step would be invitation for a CD-1 review
  - Know what documents and information are required
  - Have told program of our intention to compile CD-1 level information ~ December 2019
  - While not officially encouraged – were not disabused of that target
- Strategy
  - CDI: Bragg-CDI for world-class lensless imaging down to 5 nm
    - Through conceptual design – refinements needed but likely close to CD-1 ready
  - ARI: Scanning probe with simultaneous nano-APPES/nano-RIXS capabilities at ~100 nm resolution
    - RIXS spectrometer preference would be Zone Plate
      - Starting R&D activity on this option now
    - Back-up 'conventional design' needs analysis
    - Aim for conceptual design for both options at CD-1 with goals/milestones planned to support a selection at a CD-2 about 1 year later
  - SMF: Soft x-ray STXM with nm-scale resolution via ptychography
    - Believe this is largely putting one foot after the other to get to a workable conceptual design that can share a port with ARI
  - Have assembled small team to work on building the elements for a CD-1 level package
  - believe based on what is in hand this can be accomplished, but it will be a push

NSF Mid-scale Proposal: Infrared Nano-imaging Facility Beamline

- State-of-the-art IR beamline
- Three simultaneous endstations with nano-IR imaging capabilities
- Goal is to combine atomic resolution STM with nano-scale resolution of optical properties
- Will respond to NSF midscale research infrastructure proposal call
- Partner with Columbia/SBU as lead institutions – with sub-award to BNL
- Preproposal submitted Feb 2019
- Expect to hear soon if NSF would like a full proposal

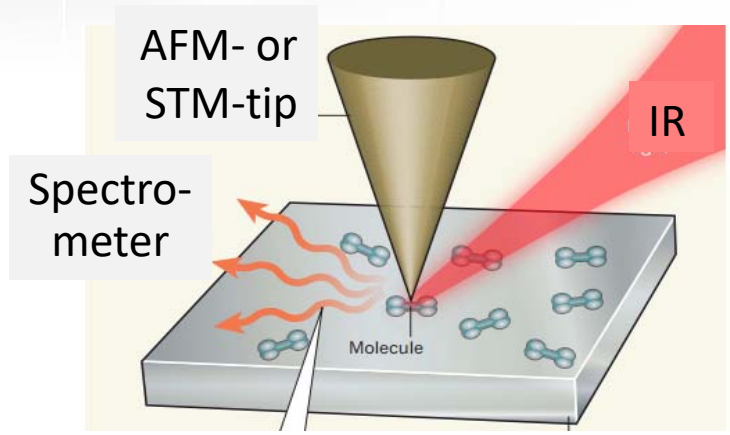

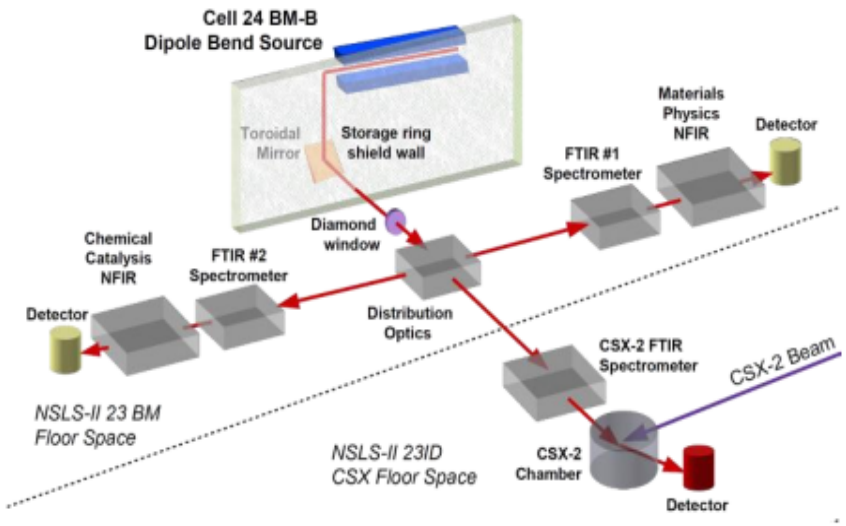

INFINITE (INF)

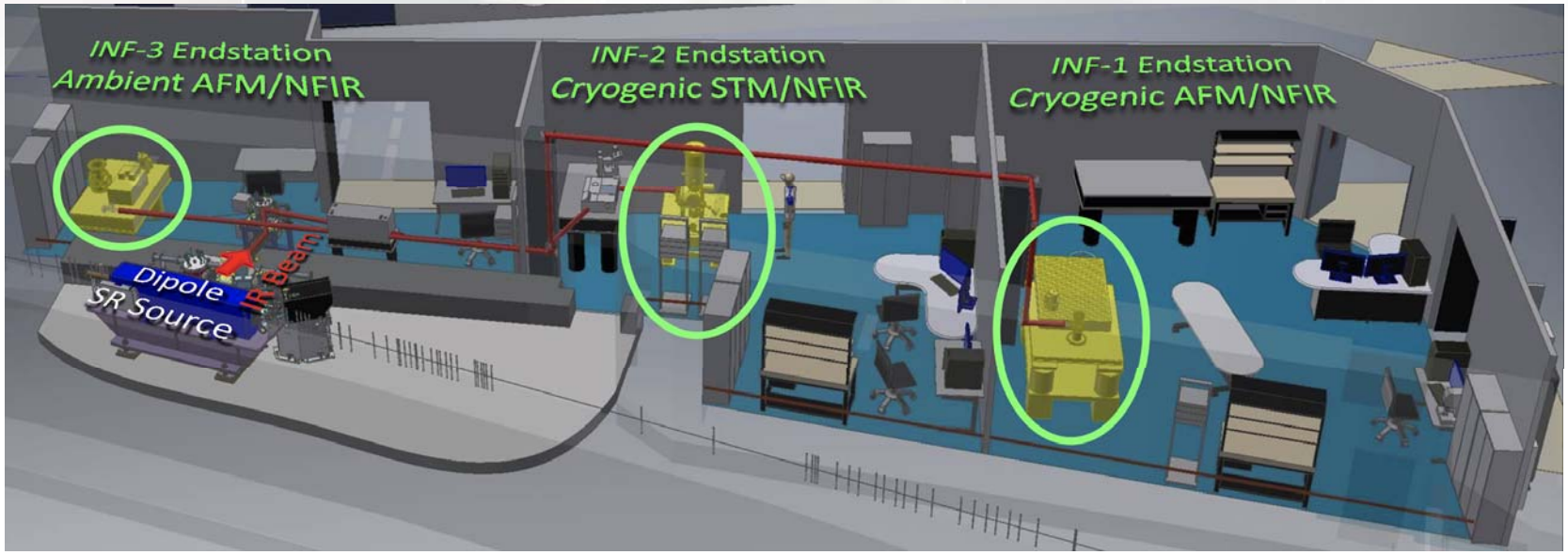

Conceptual layout of *Integrated Nanoimaging Facility to Investigate Novel quantum Information Technologies and Emergence* (INFINITE) beamline

Partners: Abhay Pasupathy (PI, Columbia), Dmitri Basov (co-PI, Columbia), Latha Venkataraman (co-PI, Columbia), Mengkun Liu (co-PI, Stony Brook), Larry Carr (co-PI, BNL)

~$4.5M at Columbia and SUNY-SB for personnel and the three end stations
~ $7.3M at BNL for beamline, cabins and controls

DOE-NE MRE Beamline

Proposal for Materials in Radiation Environments Beamline

Needs to provide:

1. diffraction and imaging capabilities spanning 30-200 keV energy range, with msec-µsec time resolution and µm to mm beam sizes
2. examine highly diverse radioactive samples, e.g., fuels, cladding, dispersibles, solutions,
3. support *in situ* experimental environmental conditioning, e.g., temperature, pressure, solution/gas exposure, mechanical stress, electric field,
4. support routine characterization using high-throughput capabilities
5. conduct user defined experimental studies leveraging the versatility and flexibility of facility.

- MRE would support work from the (funded) Versatile Test Reactor development
- ~$60M targeted for CD0 in FY20
- Stay tuned!

Strategic Planning Workshop, October 2019

- Strategic Planning Workshop being planned for October 21-23 at SBU and BNL
- Goals: to capture current scientific grand challenges, discuss evolving research needs, and identify new capabilities that should be developed at NSLS-II
- Six science areas: each led by two co-Leaders
  - Quantum information science
  - Soft matter
  - Materials science and engineering
  - Catalysis and chemical science
  - Molecular and cell biology
  - Biosystems and earth & environmental sciences
- Workshop report will summarize the main findings and directions for new beamlines/capabilities
- Plan to solicit *white papers* to capture community interests and beamline concepts

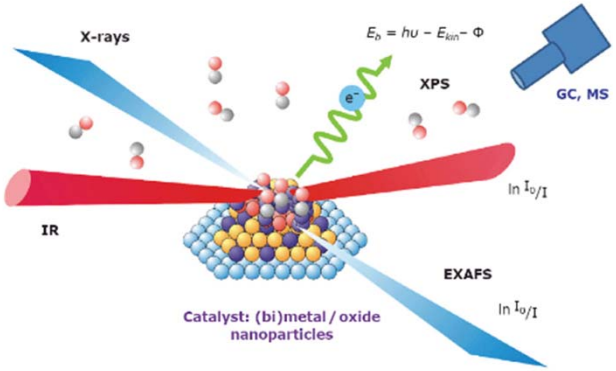

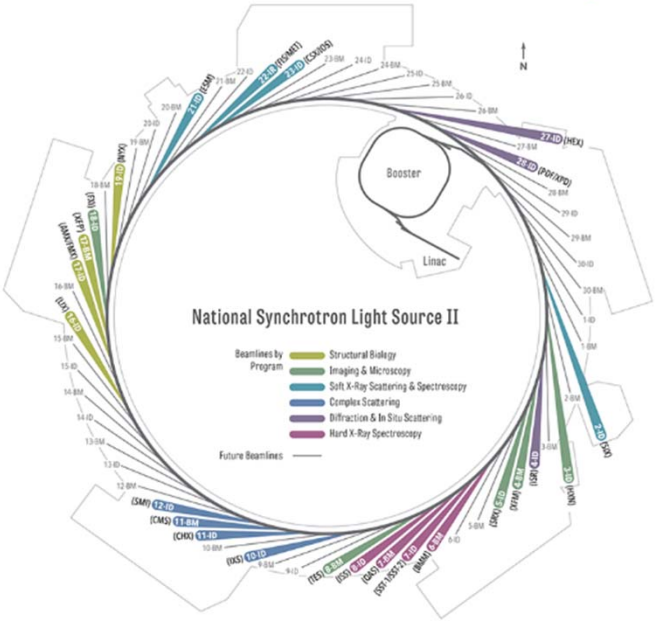

Summary

- Beamline development has been very successful
  - Delivered 28 beamlines in record time
- Used pause to develop new concepts
  - Strategically directed to science and instruments that
    - exploit the capabilities of the facility
    - build on the community established at NSLS-II
- Construction activities likely to ramp up
  - MIE on firmer ground (CDI, ARI, SMF)
  - Other potential engagements (INF, MRE)
  - Looking beyond to what might be next