REVISION HISTORY					
REV	DESCRIPTION	DATE	DESIGNER	CHECKED BY	ENGINEER
A	RELEASE PER ECO-005541	7/2018	J.FABIJANIC	R.GAMBELLA	M.LUCAS
B	REVISED PER ECO-005683	11/2018	J.FABIJANIC	R.GAMBELLA	M.LUCAS

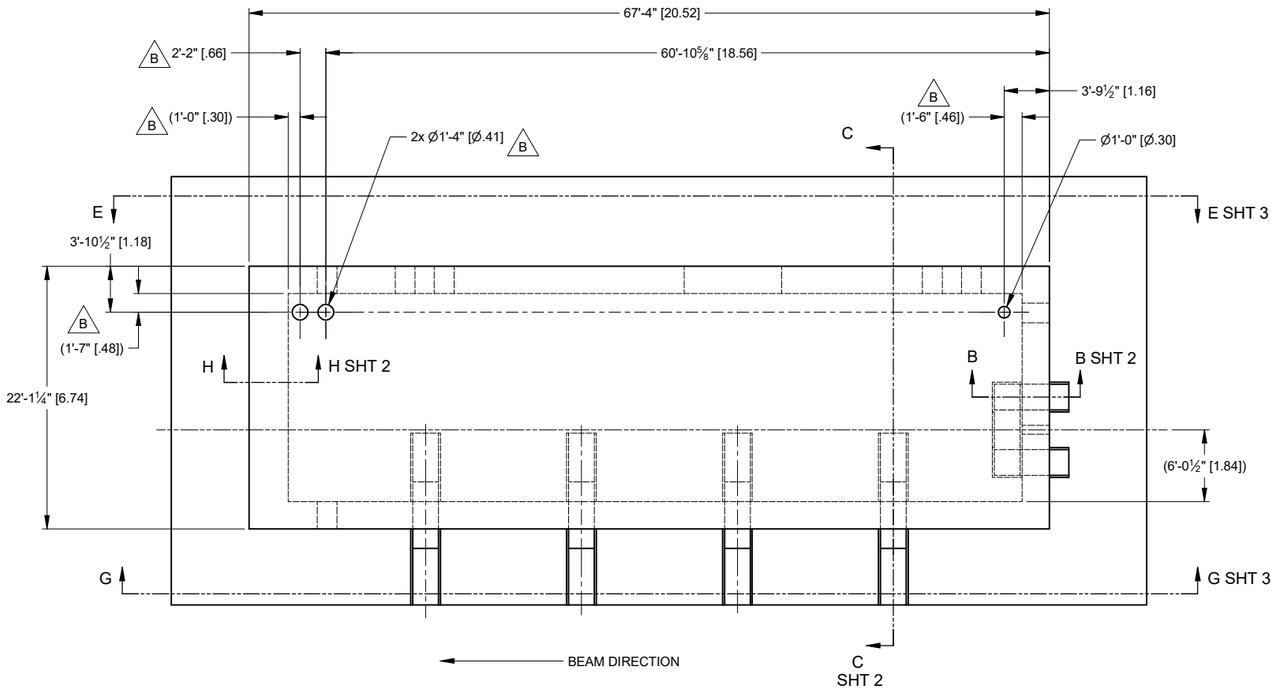

TOP VIEW
SCALE 1 / 75

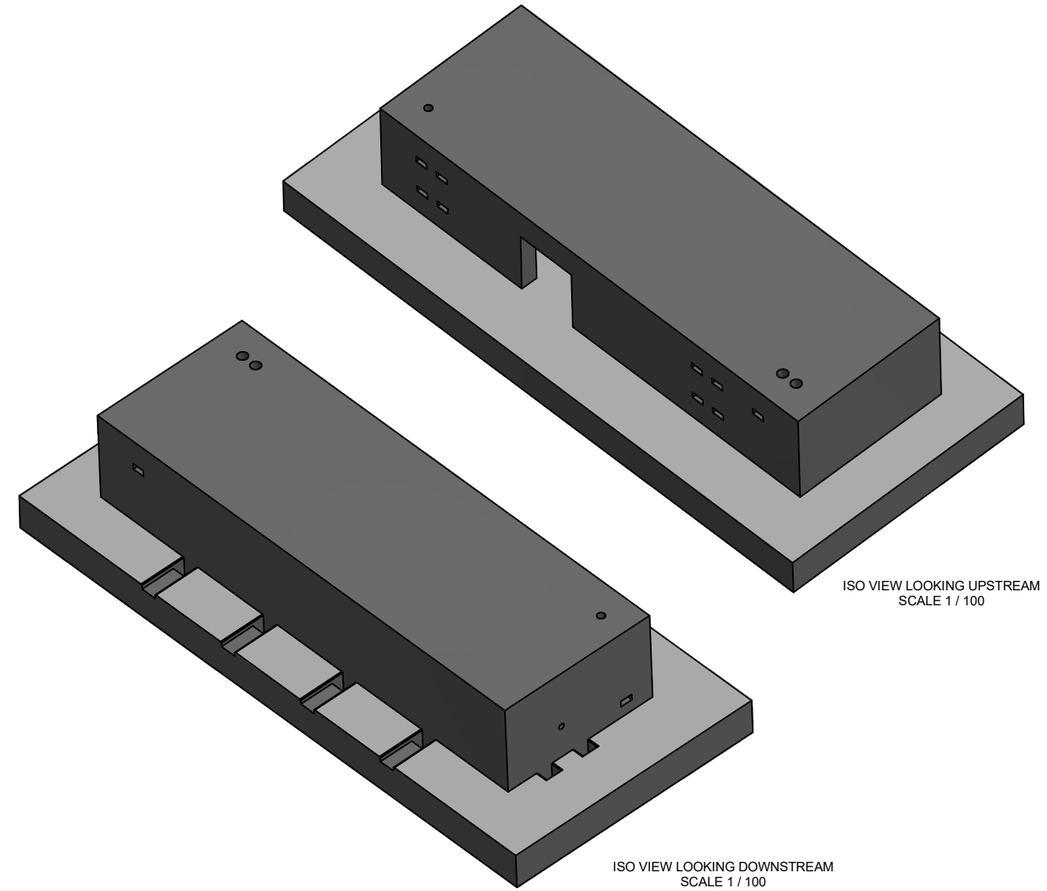

ISO VIEW LOOKING UPSTREAM
SCALE 1 / 100

ISO VIEW LOOKING DOWNSTREAM
SCALE 1 / 100

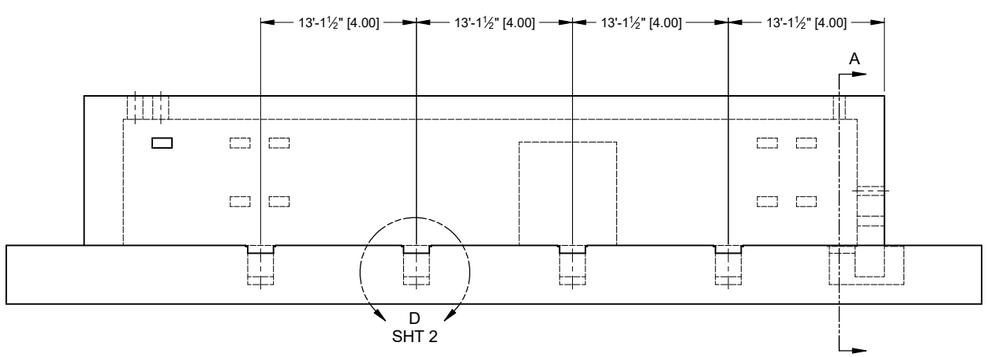

SIDE VIEW
SCALE 1 / 75

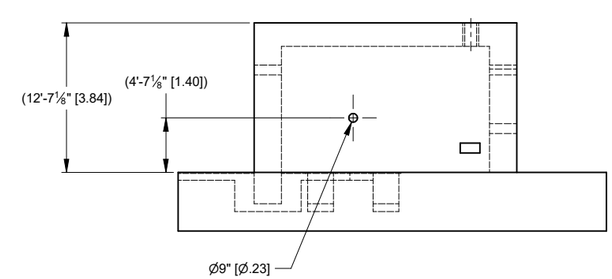

FRONT VIEW
SCALE 1 / 75

NOTES:

1- ALL DIMENSIONS SHOWN ARE IN FEET-INCHES, ALSO SHOWN AS METERS IN BRACKETS [X.XX].

2- PRELIMINARY DRAWING TO BE USED BY VENDOR FOR TRENCH LAYOUT. VENDOR MUST SUBMIT FINAL DRAWING FOR APPROVAL BY BNL.

RELEASE FOR QUOTES OR PROTOTYPE ONLY NOT FOR PRODUCTION SEE NOTE 2

UNLESS OTHERWISE SPECIFIED
ALL DIMENSIONS ARE IN INCHES
DIMENSIONS IN BRACKETS [xx.xx] (WHERE PRESENT) ARE MILLIMETERS AND ARE FOR REFERENCE ONLY
INTERPRET DRAWING AS PER ASME Y14.5-2009
DIMENSIONAL TOLERANCES: X. ± 0.060, .X ± 0.030, .XX ± 0.015, .XXX ± 0.005
ANGULAR TOLERANCE ± .5°
FINISH 125
BREAK EDGES & SHARP CORNERS 0.005 MIN. TO 0.020 MAX.

THIRD ANGLE PROJECTION

SCALE: SEE DWG VIEW

BROOKHAVEN NATIONAL LABORATORY
BROOKHAVEN NATIONAL LABORATORY
BROOKHAVEN SCIENCE ASSOCIATES
UPTON, NEW YORK 11973
Exploring Life's Mysteries, Protecting its Future

NSLSII NATIONAL SYNCHROTRON LIGHT SOURCE II

DRAWN BY	J.FABIJANIC	6/12/2018
CHECKED BY	R.GAMBELLA	7/2018
VACUUM APPROVAL	N/A	N/A
ENGINEER APPROVAL	M.LUCAS	7/2018
SUPERVISOR APPROVAL	A.BROADBENT	7/2018
ESH APPROVAL	L.STIEGLER	7/2018
QA APPROVAL	J.ZIPPER	7/2018

PHOTON DIVISION
HEX, HUTCH
HUTCH 27-ID-F, EXPERIMENTAL HUTCH

D — SHEET SIZE
PD-HEX-HU-1610 — DRAWING/PART NUMBER
B — REVISION

NEXT ASSY: PD-HEX-HU-1000

WBS# 7.5.04.01

ESH&Q RISK LEVEL A1

SHEET 1 OF 4

C:\Mech-Eng\LTP\DHEX\HU\PD-HEX-HU-1610.dw

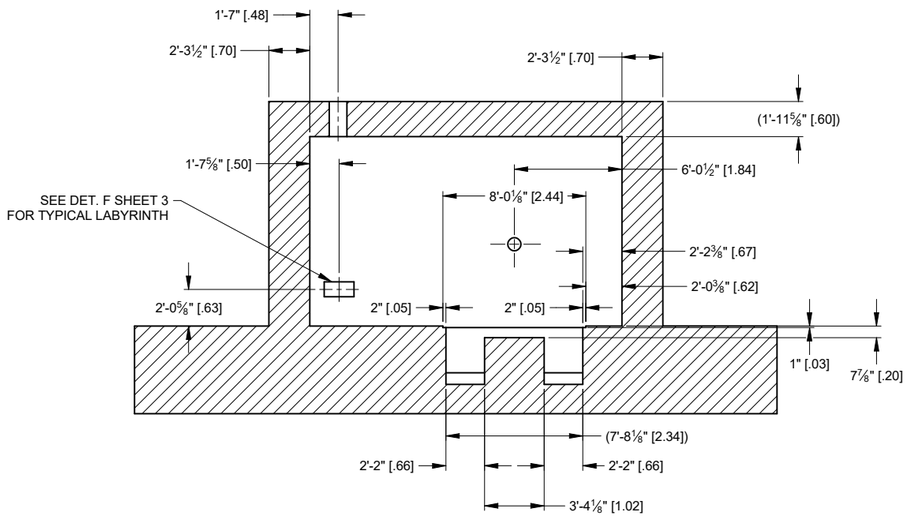

SECTION A-A
SCALE 1 / 50
(SEE ISO VIEW ON SHEET 4)

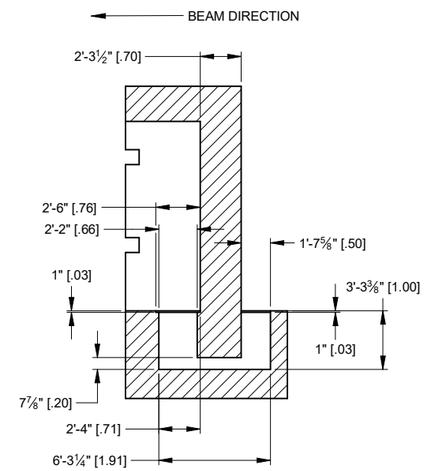

SECTION B-B
SCALE 1 / 50
(SEE ISO VIEW ON SHEET 4)

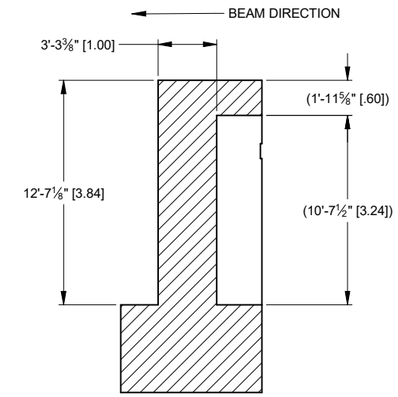

SECTION H-H
SCALE 1 / 50

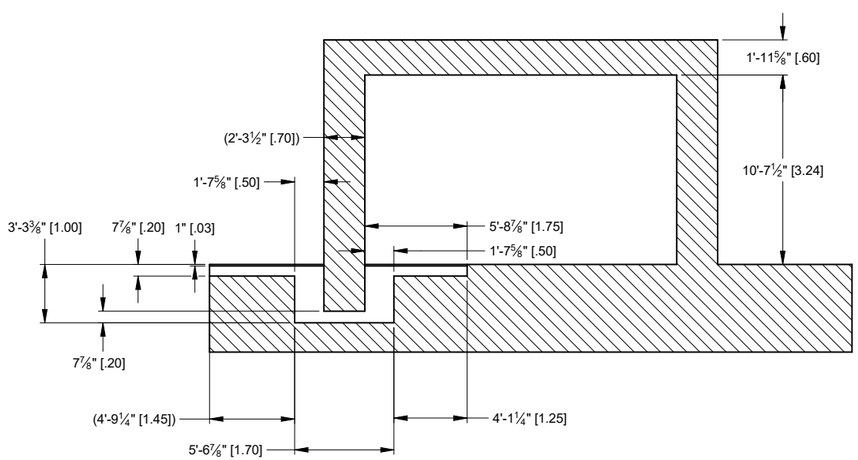

SECTION C-C
SCALE 1 / 50
(SEE ISO VIEW ON SHEET 4)

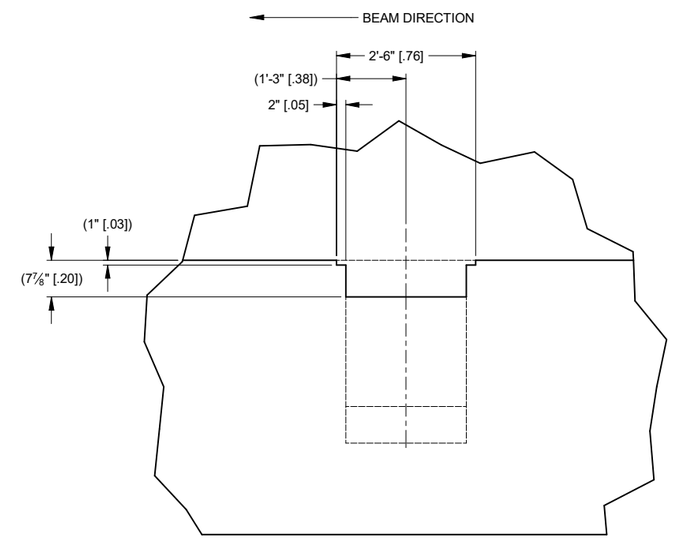

DETAIL D
SCALE 1 : 16

NOTES:

1- SEE SHEET 4 FOR ADDTIONAL ISO VIEWS OF SECTIONS ON THIS SHEET.

D (SHEET SIZE)	PD-HEX-HU-1610 (DRAWING/PART NUMBER)	B (REVISION)
ESH&Q RISK LEVEL A1	SHEET 2 OF 4	

C:\Mech-Eng\LTP\DHEX\HU\PD-HEX-HU-1610.dw

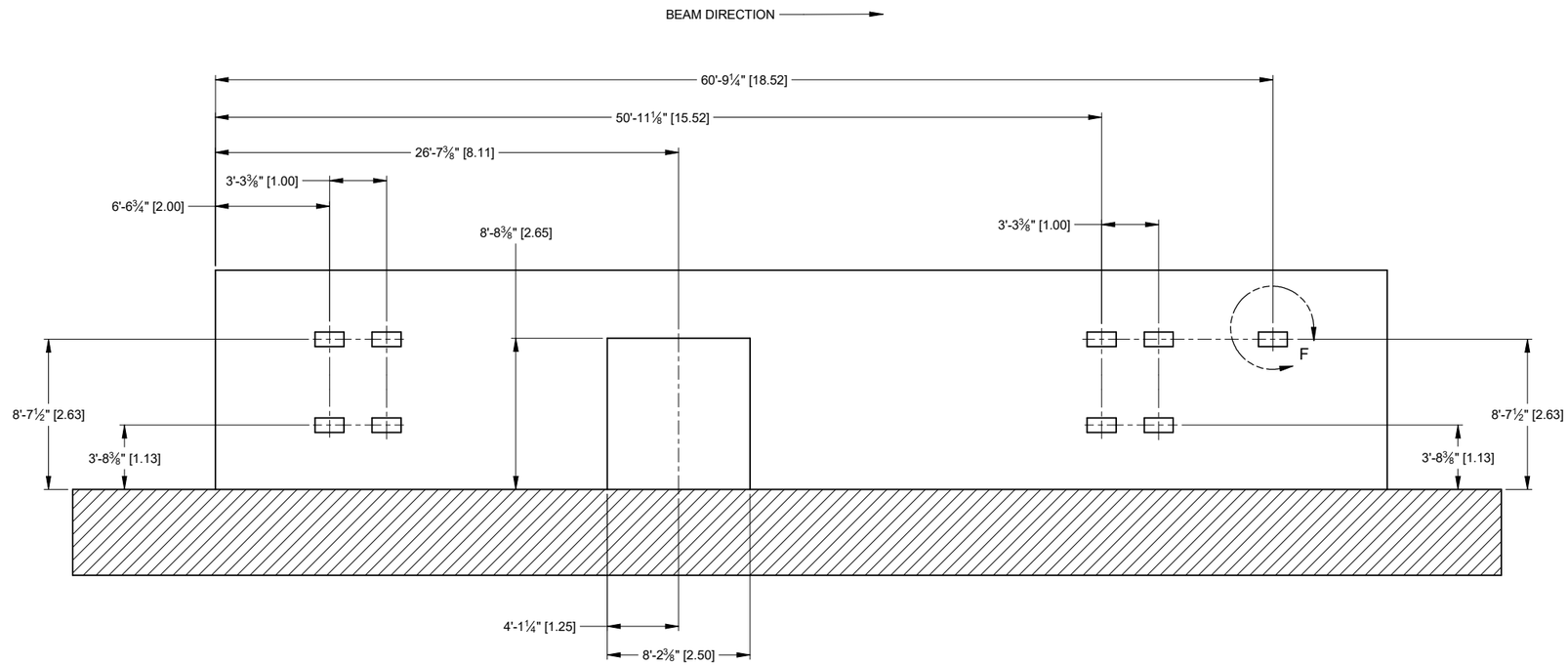

SECTION E-E (INBOARD SIDE)
SCALE 1 / 50

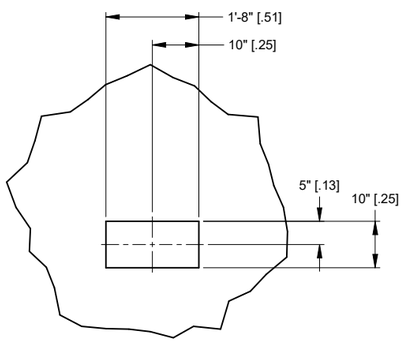

DETAIL F, (TYPICAL LABYRINTH)
SCALE 1 : 16

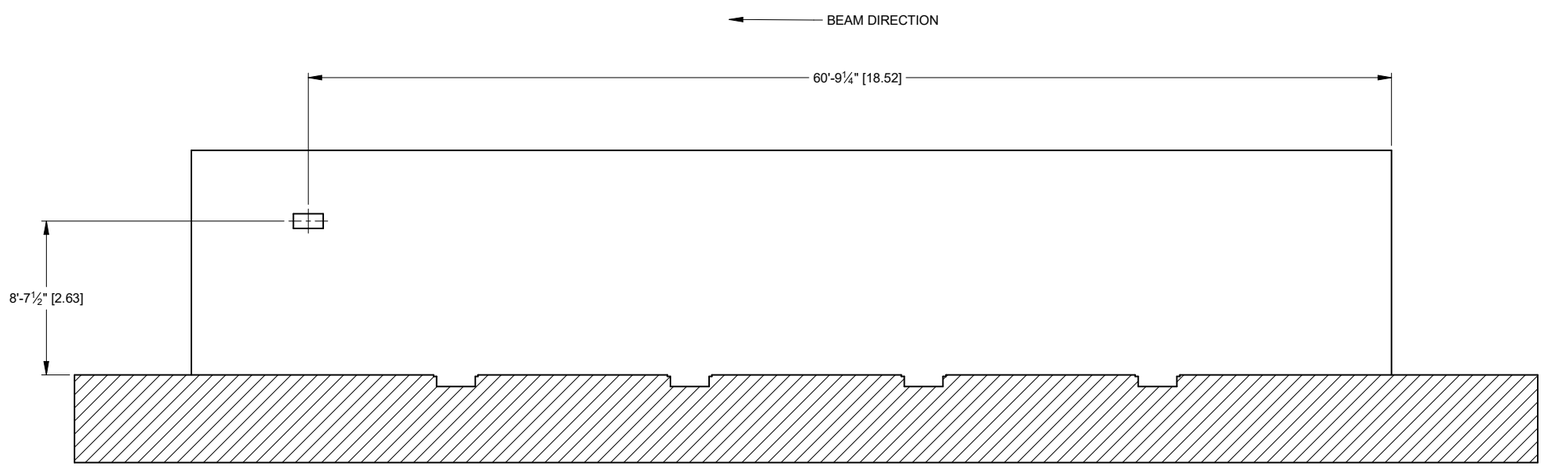

SECTION G-G (OUTBOARD SIDE)
SCALE 1 / 50

D (SHEET SIZE)	PD-HEX-HU-1610 (DRAWING/PART NUMBER)	B (REVISION)
ESH&Q RISK LEVEL A1	SHEET 3 OF 4	

C:\Mech-Eng\LTP\D\HEX\HU\PD-HEX-HU-1610.dw

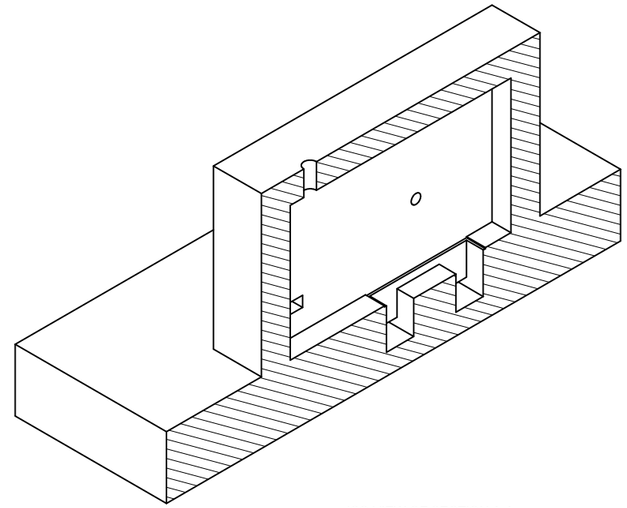

ISO VIEW OF SECTION A-A
SCALE 1 / 50

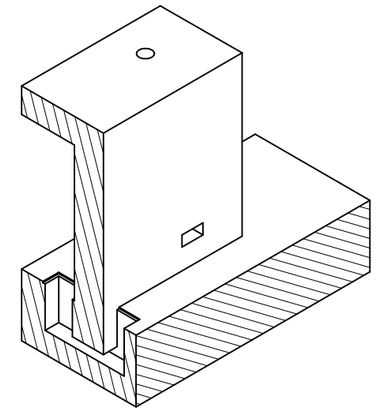

ISO VIEW OF SECTION B-B
SCALE 1 / 50

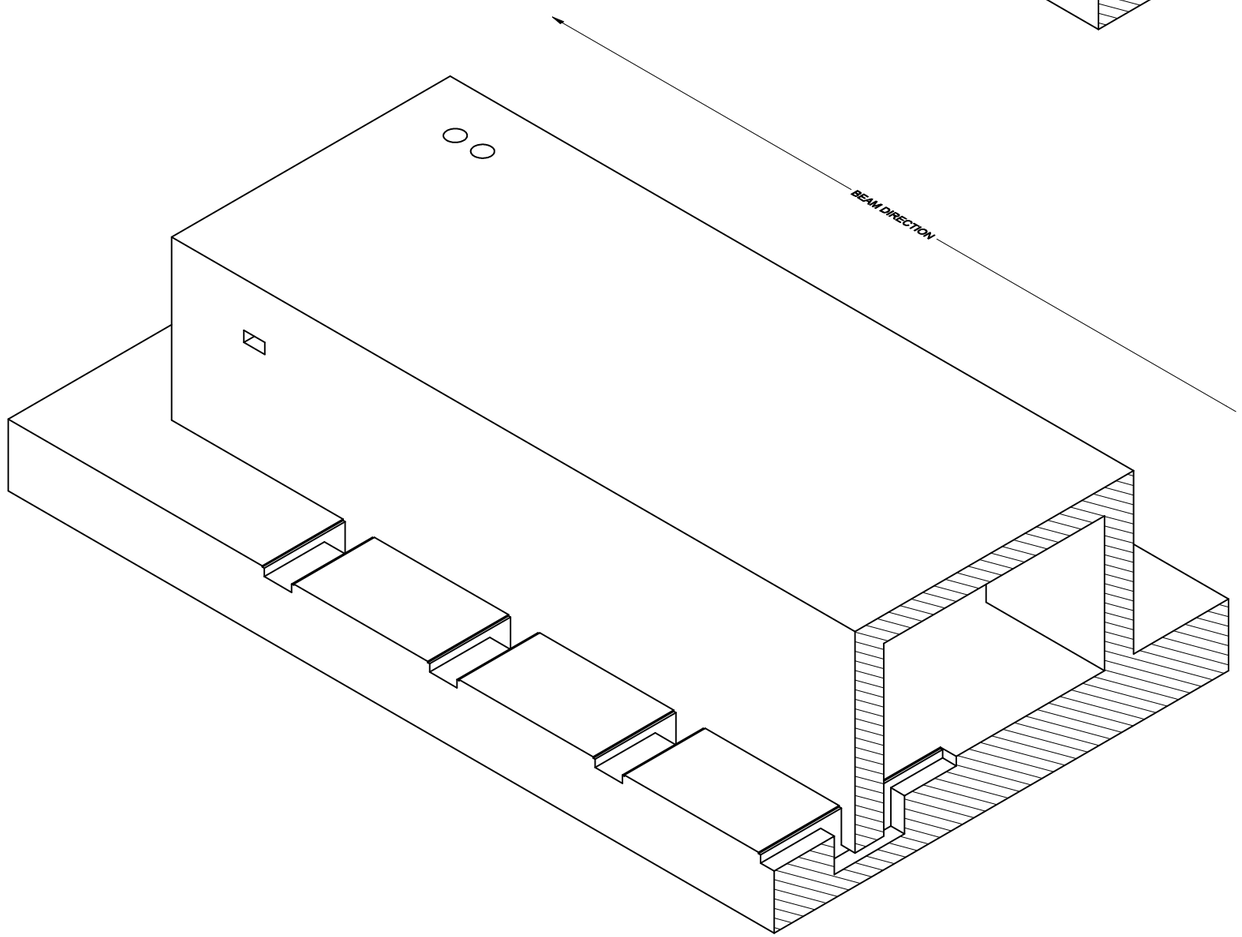

ISO VIEW OF SIDE TRENCH SECTION C-C
SCALE 1 / 50

D SHEET SIZE	PD-HEX-HU-1610 DRAWING/PART NUMBER	B REVISION
ESH&Q RISK LEVEL A1	SHEET 4 OF 4	

C:\Mech-Eng\LTPD\HEX\HU\PD-HEX-HU-1610.dw