REVISION HISTORY					
REV	DESCRIPTION	DATE	DESIGNER	CHECKED BY	ENGINEER
4	RELEASE PER ECO-005480	04/2018	A.DESANTIS	RG/ML	M.LUCAS
5	REVISION PER ECO-005697	11/2018	A.DESANTIS	R. GAMBELLA	M.LUCAS

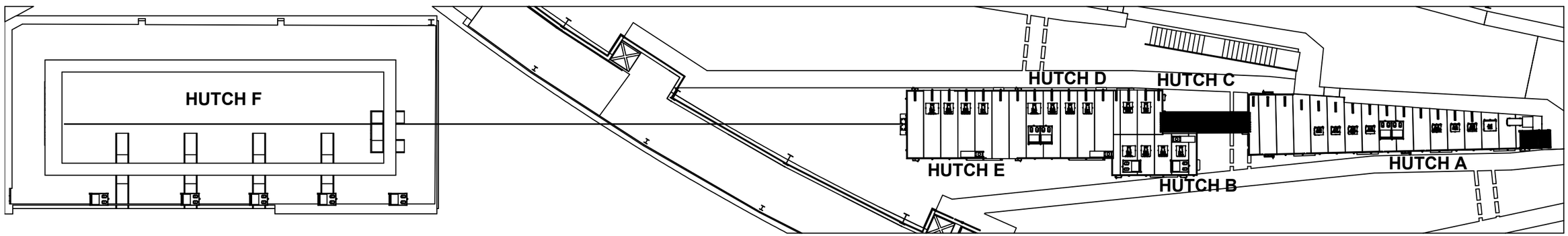

5

DI WATER SYSTEM						
SYSTEM	Hutch A	Hutch B	Hutch C	Hutch D	Hutch E	Hutch F
PPS	MASK #1	-	MASK #7	MASK #8	MASK #9	MASK #10
	MASK #2/WB STOP			WB STOP	WHITE BEAM SHUTTER	WB STOP
	MASK #3					
	MASK #4					
	MASK #5					
	MASK #6					
	WHITE BEAM SHUTTER #1	-				
	WHITE BEAM SHUTTER #2					
EPS	DIAMOND WINDOW (3)		FUTURE CIRCUIT	FUTURE CIRCUIT	FUTURE CIRCUIT	FUTURE CIRCUIT
	FILTERS				DIAGNOSTICS	DIAGNOSTICS
	SIDE BOUNCE MONO*					
	WHITE BEAM SLITS					
	IMAGING MONO + WBS					
	FOCUSING MONO* + WBS					

*FUTURE SCOPE
ASSUME 1.5" WATER PIPE
WATER CIRCUITS TO BE COMBINED WHERE POSSIBLE (IN SERIES)

HEX DI WATER SYSTEM

PROCUREMENT CONTROL DRAWING
RELEASE AT REV 5 AS DWFX

INFORMAL RELEASE
FOR QUOTES OR PROTOTYPE ONLY
NOT FOR PRODUCTION

UNLESS OTHERWISE SPECIFIED
ALL DIMENSIONS ARE IN INCHES
DIMENSIONS IN BRACKETS [xx.xx] (WHERE PRESENT) ARE MILLIMETERS AND ARE FOR REFERENCE ONLY
INTERPRET DRAWING AS PER ASME Y14.5-1994 OR Y32.2-1975

DIMENSIONAL TOLERANCES
X. ± 0.060
.X ± 0.030
.XX ± 0.015
.XXX ± 0.005

ANGULAR TOLERANCE ± .5°
FINISH 125
BREAK EDGES & SHARP CORNERS 0.005 MIN. TO 0.030 MAX

THIRD ANGLE PROJECTION
SCALE: SEE DWG VIEW

BROOKHAVEN NATIONAL LABORATORY
BROOKHAVEN NATIONAL LABORATORY
BROOKHAVEN SCIENCE ASSOCIATES
UPTON, NEW YORK 11973
Exploring Life's Mysteries, Protecting its Future
NSLS II NATIONAL SYNCHROTRON LIGHT SOURCE II

DRAWN BY	A.DESANTIS	4/11/2018
CHECKED BY	RG/ML	04/2018
VACUUM APPROVAL		
ENGINEER APPROVAL	M.LUCAS	04/2018
SUPERVISOR APPROVAL		
ESSH APPROVAL		
QA APPROVAL		

PHOTON DIVION
HEX BEAMLINE, UTILITIES
HEX BEAMLINE UTILITIES

D — SHEET SIZE
PD-HEX-UT-1000 — DRAWING/PART NUMBER
5 — REVISION

NEXT ASSY:
PROJECT:
WBS# 7.5.04
ESH&Q RISK LEVEL A3
SHEET 1 OF 8

C:\Mech-Eng\LTP\DWEX\UT\PD-HEX-UT-1000.dxw

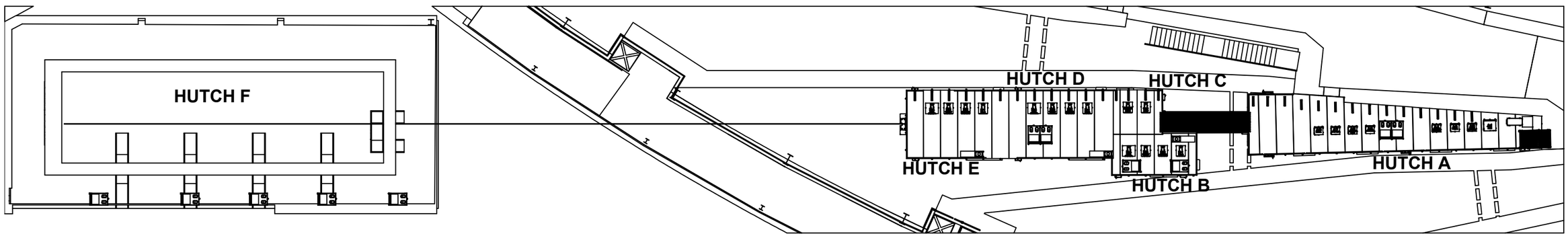

5

PROCESS CHILLED WATER SYSTEM						
Location	Hutch A	Hutch B	Hutch C	Hutch D	Hutch E	Hutch F
Hutch Roof	2 Racks	2 Racks (1*)	-	2 Racks (1*)	-	-
Inside	-	1 Circuit	-	1 Circuit	1 Circuit	2 Circuits
On Floor	-	-	-			5 Racks

* FUTURE SCOPE

HEX PROCESSED CHILLED WATER SYSTEM

D	PD-HEX-UT-1000	5
SHEET SIZE	DRAWING/PART NUMBER	REVISION
ESH&Q RISK LEVEL A3	SHEET 2 OF 8	

C:\Mech-Eng\LTP\DWG\HEX\UT\PD-HEX-UT-1000.dwg

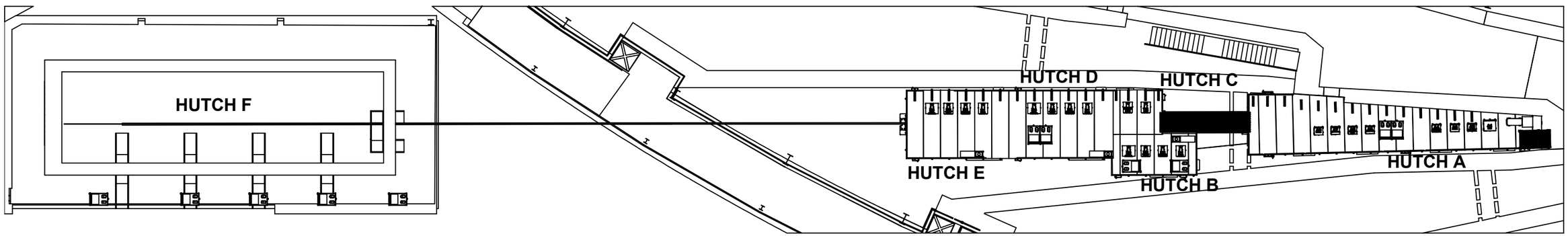

COMPRESSED AIR SYSTEM					
Hutch A	Hutch B	Hutch C	Hutch D	Hutch E	Hutch F
6 OUTLETS	3 OUTLETS	3 OUTLETS	3 OUTLETS	3 OUTLETS	6 OUTLET
2 MANIFOLDS	1 MANIFOLD	1 MANIFOLD	1 MANIFOLD	1 MANIFOLD	2 MANIFOLDS
HUTCH DOORS	HUTCH DOOR	HUTCH DOOR	HUTCH DOOR	HUTCH DOOR	HUTCH DOOR

GN2					
Hutch A	Hutch B	Hutch C	Hutch D	Hutch E	Hutch F
1 OUTLET	1 OUTLET	-	1 OUTLET	1 OUTLET	2 OUTLET

LN2					
Hutch A	Hutch B	Hutch C	Hutch D	Hutch E	Hutch F
1 ON ROOF	1 OUTLET	-	1 OUTLET	1 OUTLET	1 OUTLET

HEX COMPRESSED AIR SYSTEM

D SHEET SIZE	PD-HEX-UT-1000 DRAWING/PART NUMBER	5 REVISION
ESH&Q RISK LEVEL A3	SHEET 3 OF 8	

C:\Mech-Eng\LTP\DWG\HEX\UT\PD-HEX-UT-1000.dxw

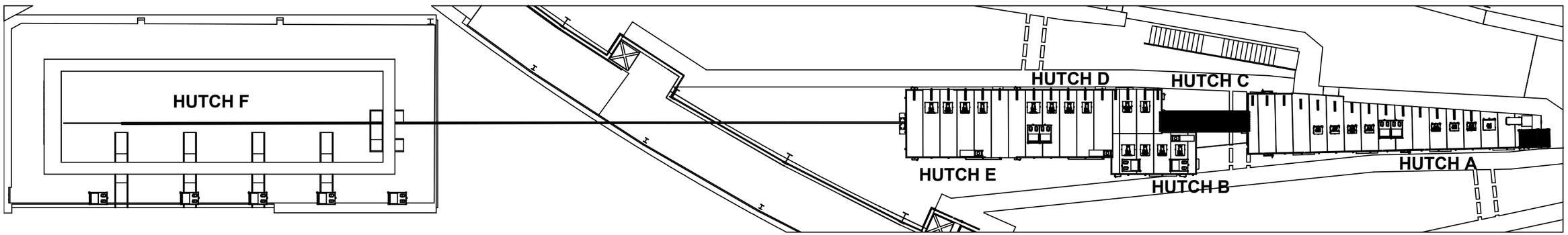

5

PPS SYSTEM						
ITEM	Hutch A	Hutch B	Hutch C	Hutch D	Hutch E	Hutch F
Search Buttons	2	2	1	2	2	2
Doors	2	1	1	1	1	1
HMI	Y	N	N	Y	N	Y
Shutter	3**	0	0	0	1(WC)	0
PPS Water Circuit	4	0	1	1	1	1
User Labyrinths	2	1	0	2	2	5

*No Vacuum Sensors in PPS
**Three in full scope, one in initial scope

HEX PPS SYSTEM

D SHEET SIZE	PD-HEX-UT-1000 DRAWING/PART NUMBER	5 REVISION
ESH&Q RISK LEVEL A3	SHEET 4 OF 8	

C:\Mech-Eng\LTP\D\HEX\UT\PD-HEX-UT-1000.dxw

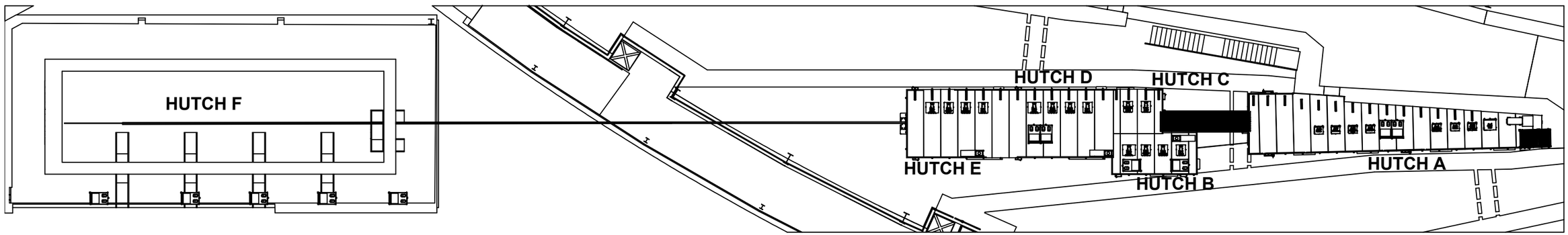

EPS SYSTEM						
ITEM	Hutch A	Hutch B	Hutch C	Hutch D	Hutch E	Hutch F
Thermocouples	40	5	10	10	10	20
Gate Valves	5	1	-	1	1	2
Water Leak Alarms	1	0	1	1	1	1
Flow Sensors	6	0	1	1	1	1

HEX EPS SYSTEM

D SHEET SIZE	PD-HEX-UT-1000 DRAWING/PART NUMBER	5 REVISION
ESH&Q RISK LEVEL A3	SHEET 5 OF 8	

C:\Mech-Eng\LTP\D\HEX\UT\PD-HEX-UT-1000.dw

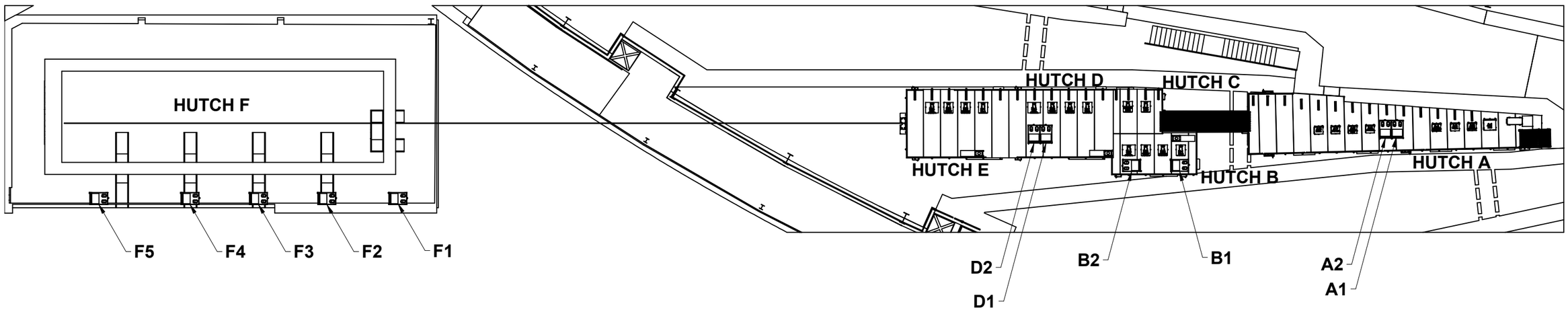

RACK LAYOUT	
A1	MOTION CONTROLS
A2	VACUUM, EPS, IOC
B1	MOTION CONTROLS, VACUUM
B2	EXPERIMENT
D1	MOTION CONTROLS, VACUUM
D2	EXPERIMENT
F1	MOTION CONTROLS, VACUUM
F2	EXPERIMENT
F3	
F4	
F5	

HEX RACK LAYOUT

D SHEET SIZE	PD-HEX-UT-1000 DRAWING/PART NUMBER	5 REVISION
ESH&Q RISK LEVEL A3	SHEET 6 OF 8	

C:\Mech-Eng\LTP\PD\HEX\UT\PD-HEX-UT-1000.idw

MAIN PANEL #3 IN SATELLITE BUILDING (MAY USE TWO PANELS FOR THIS - EG INSIDE AND OUTSIDE HUTCH - LOCATIONS TBD)		
VOLTAGE	FUNCTION AND HUTCH DESIGNATOR	CIRCUITS
115V	F FAN(S)	2
115V	F DOORS + CONVENIENCE OUTLET	1
115V		
115V	F LIGHTS - CIRCUIT 1	1
115V	F LIGHTS - CIRCUIT 2	1
115V	F-HUTCH AND USER AREA EMERGENCY LIGHTS	1
115V		
115V	RACKS F1, F2, F3, F4, F5	5
115V	OUTLETS ON WALL OUTSIDE F HUTCH (INBOARD SIDE)	2
115V	F HUTCH INTERNAL OUTLETS (4 CIRCUITS)	4
115V		
208V		
208V	OUTLETS IN F-HUTCH U/S & D/S	4
208V	RACKS F1, F2, F3, F4, F5	10
208V	3ph 5-WIRE IN HUTCH F - UPSTREAM	3
208V	3ph 5-WIRE IN HUTCH F - DOWNSTREAM	3
	TOTAL	37

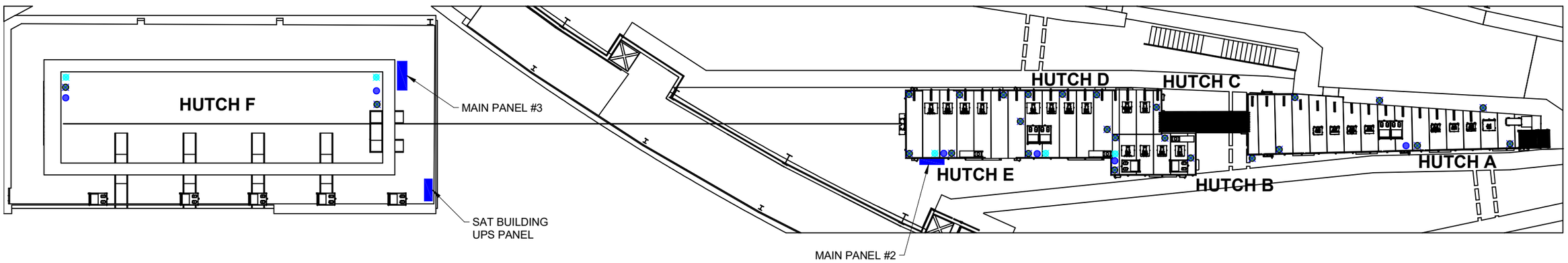

UPS PANEL FOR SATELLITE BUILDING. LOCATED IN U/S & O/B CORNER OF SB.		
VOLTAGE	FUNCTION AND HUTCH DESIGNATOR	CIRCUITS
115V	UPS FOR RACKS F1, F2, F3, F4, F5	6
115V	F ODH	

MAIN PANEL #2 ON E-HUTCH WALL. SERVES D, E HUTCHES.		
VOLTAGE	FUNCTION AND HUTCH DESIGNATOR	CIRCUITS
115V	D FAN AND E FAN	2
115V		
115V	D & E DOORS + CONVENIENCE OUTLET	1
115V	D LIGHTS	1
115V	E LIGHTS	1
115V	A, B, C, D & E EMERGENCY LIGHTS	1
115V	D, E OUTLETS ON HUTCH ROOF	1
115V	RACKS D1, D2	2
115V	USER AREA DOWNSTREAM OF E-HUTCH	2
115V	D HUTCH INTERNAL OUTLETS	2
115V	E HUTCH INTERNAL OUTLETS	2
208V	OUTLETS IN D, E HUTCHES	4
208V	FEED TO UPS	2
208V	RACKS D1 (MOTION CONTROL ONLY)	2
208V	3PH 5-WIRE IN HUTCH D	3
208V	3PH 5-WIRE IN HUTCH E	3
	TOTAL	29

SYMBOL KEY

- 3ph 110V OUTLET
- 110V QUAD OUTLET
- 208V OUTLET

HEX HUTCH INTERIOR
ELECTRICAL OUTLET LAYOUT

D	PD-HEX-UT-1000	5
SHEET SIZE	DRAWING/PART NUMBER	REVISION
ESH&Q RISK LEVEL A3	SHEET 7 OF 8	

C:\Mech-Eng\LTPPD\HEX\UT\PD-HEX-UT-1000.dw

MAIN PANEL #1 ON MEZZ RAIL ADJACENT TO HEX FOE. SERVES A, C HUTCHES, PLUS B (MATURE SCOPE)		
RED TEXT DENOTES MATURE SCOPE, ASSOCIATED WITH B-HUTCH THAT WILL BE CONSTRUCTED LATER		
VOLTAGE	**FUNCTION AND HUTCH DESIGNATOR**	**CIRCUITS**
115V	A FAN AND B FAN	2
115V	A DOORS + CONVENIENCE OUTLET	1
115V	B & C DOORS + CONVENIENCE OUTLET	1
115V	A LIGHTS	1
115V	B & C LIGHTS	1
115V		
115V	A, B OUTLETS ON HUTCH ROOF + MEZZANINE	1
115V	Racks A1, A2, B1, B2	4
115V	USER AREAS ADJACENT TO A&B HUTCHES	4
115V	A HUTCH INTERNAL OUTLETS	2
115V	B& C HUTCHES INTERNAL OUTLETS	2
208V	CRYOCOLLER OUTLET ON MEZZANINE	2
208V	OUTLET IN B HUTCH	2
208V	RACKS A1, B1, (MOTION CONTROL ONLY)	4
208V	3ph 5-WIRE IN HUTCH A	3
208V	3ph 5-WIRE IN HUTCH B	3
	TOTAL	**33**

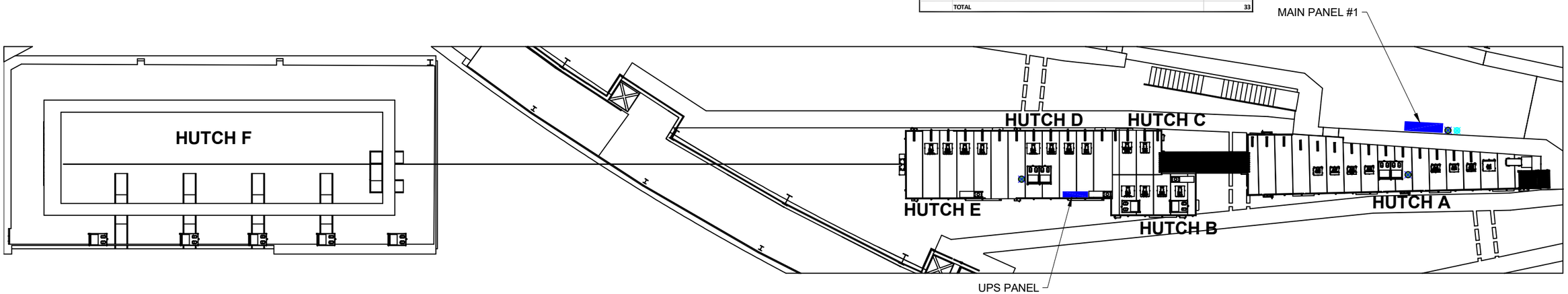

UPS PANEL FOR EXPERIMENTAL FLOOR, ON D-HUTCH ROOF		
VOLTAGE	**FUNCTION AND HUTCH DESIGNATOR**	**CIRCUITS**
115V	UPS FOR RACKS A1, A2, B1, B2, D1, D2	6
115V	A, B ODH	

HEX HUTCH EXTERIOR ROOF ELECTRICAL OUTLET LAYOUT

SYMBOL KEY

- 3ph 110V OUTLET
- 110V QUAD OUTLET
- 208V OUTLET

D	PD-HEX-UT-1000	5
SHEET SIZE	DRAWING/PART NUMBER	REVISION
ESH&Q RISK LEVEL A3	SHEET 8 OF 8	

C:\Mech-Eng\LT\PD\HEX\UT\PD-HEX-UT-1000.dw