Design and Specification of HEX Optics

HEX FDR Meeting 4/1-2/2018

Zhong Zhong

Outline

- Beamline Optical Design
  - Layout and Optical Scheme
  - Imaging Monochromator Design and Specifications
  - Micro-focusing Optics Design and Specifications
  - Heat load considerations
- Summary notes

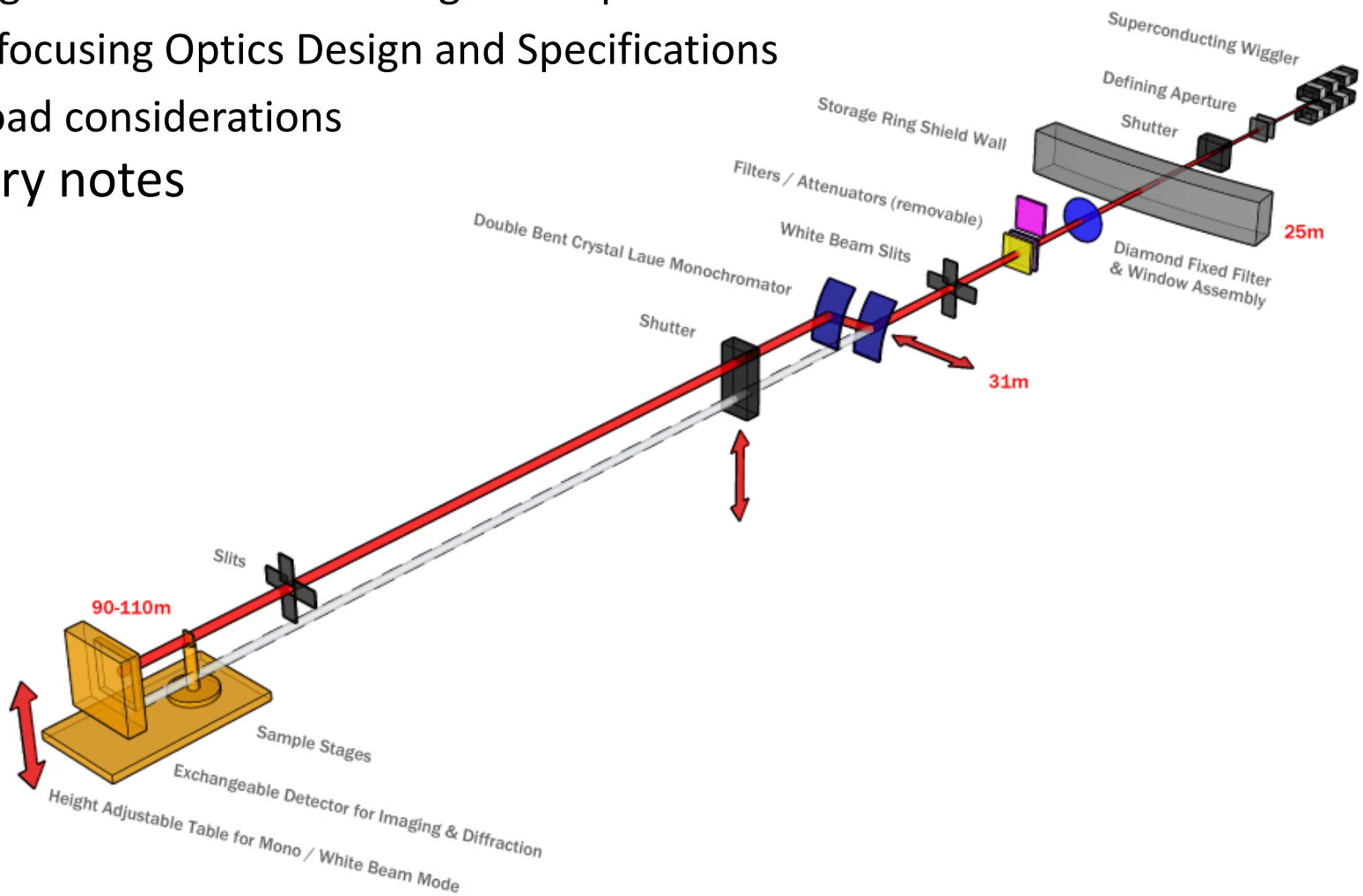

HEX Beamline Layout

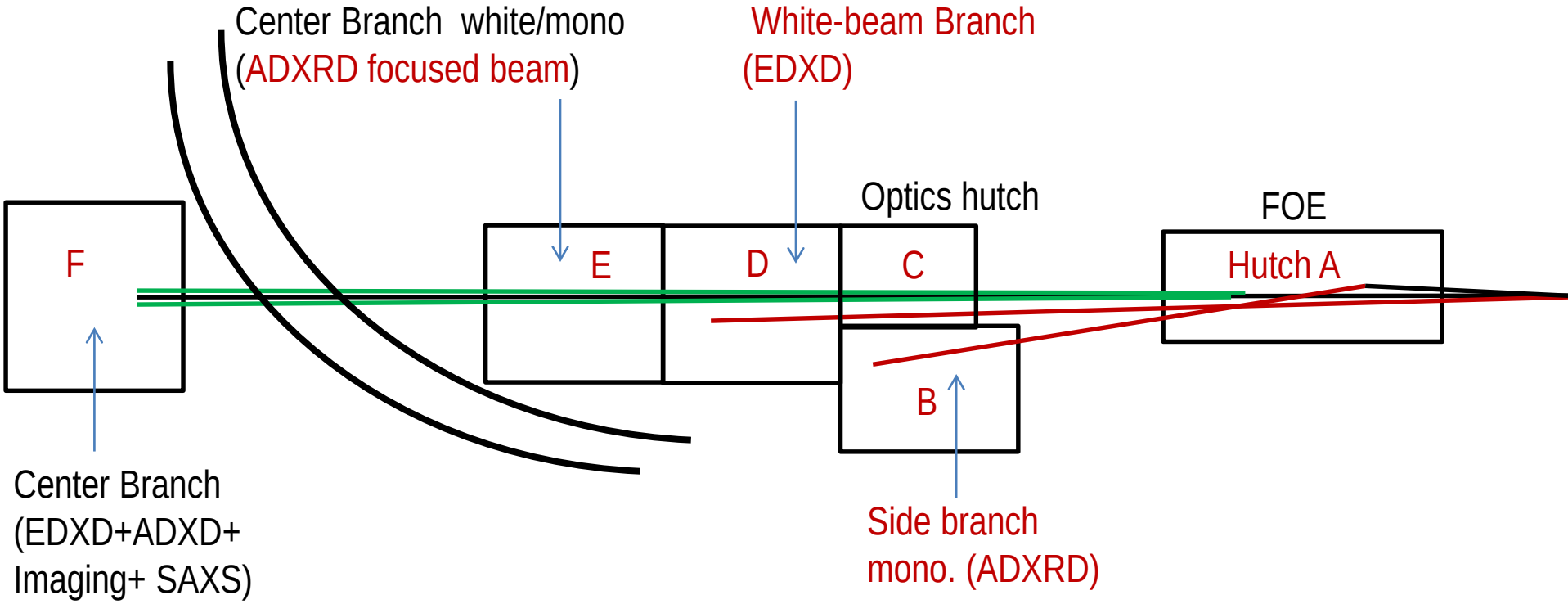

Center branch optics and endstation F is in the scope

Optics and endstations for white beam (D) and side (B) branches are not in current scope

HEX Optical Layout

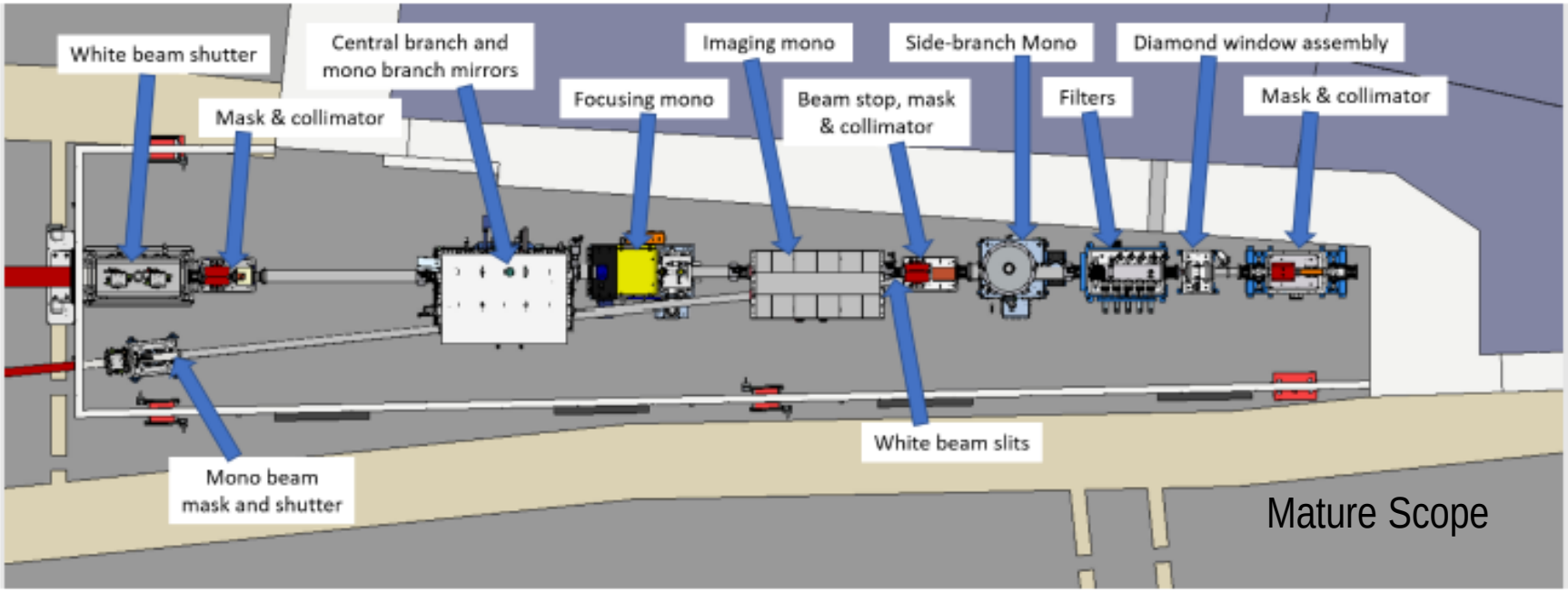

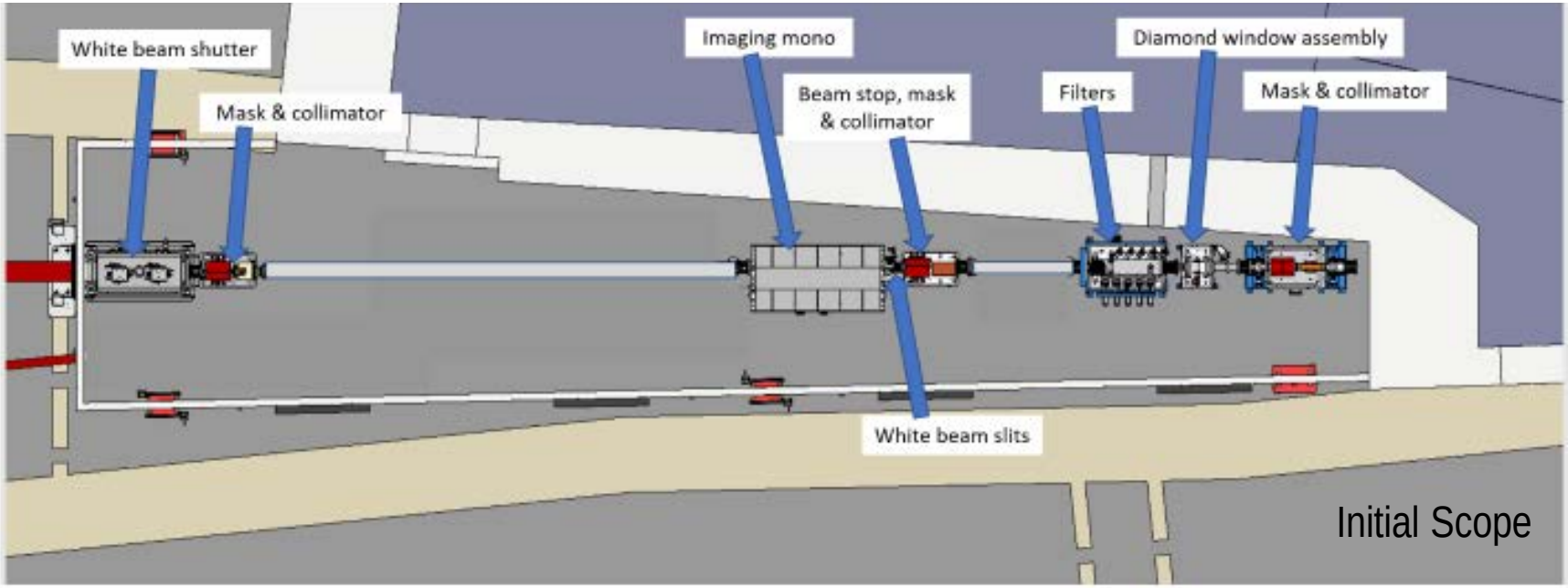

Imaging Monochromator

- Provides high-energy x-rays at a flux of 10^{11} ph/s/mm^2 at sample
- Removable from the white beam. It will allow EDXRD (high spatial resolution, depth resolution, low *q* resolution) and imaging on the same sample, greatly enhancing the HEX scientific programs.
- When the monochromatic beam size is reduced by slits, or micro-focused with KB mirror, it can be used for ADXRD.

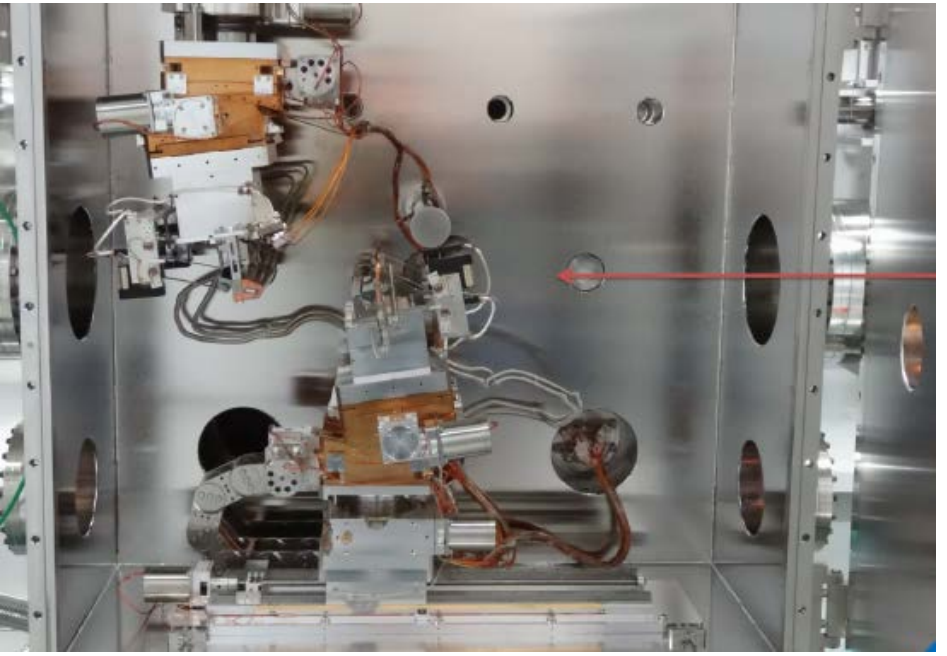

BMIT Monochromator

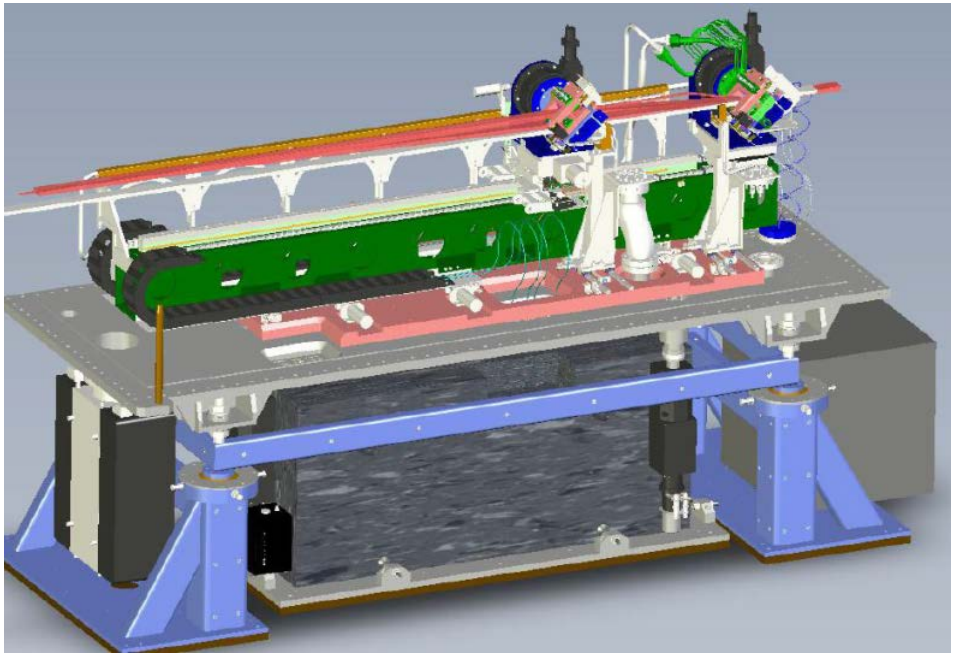

JEEP Monochromator

Design Ideas and Parameters

- HEX center branch is white-beam compatible. Thus a small offset of 25 mm is chosen to minimize distance between the two crystals – compact design and higher stability

- Monochromator first crystal and beam stop must be removable/EPS interlocked to allow white-beam operation.

- Adjustable x-ray energy 30-150 keV

  - Energy change without readjusting bending

  - Energy resolution is not important for imaging. However, the monochromator should offer a high-resolution mode for diffraction ~ 10^{-4} dE/E

- Specification: 35.3 degrees chi, 1.8 mm (1st crystal) & 2.2 mm (second crystal) thickness, 10-50 m bending radius, 25 mm gap, +- 36 deg. angle range

100 xtal, choice of 3 reflections 111, 022 & 311

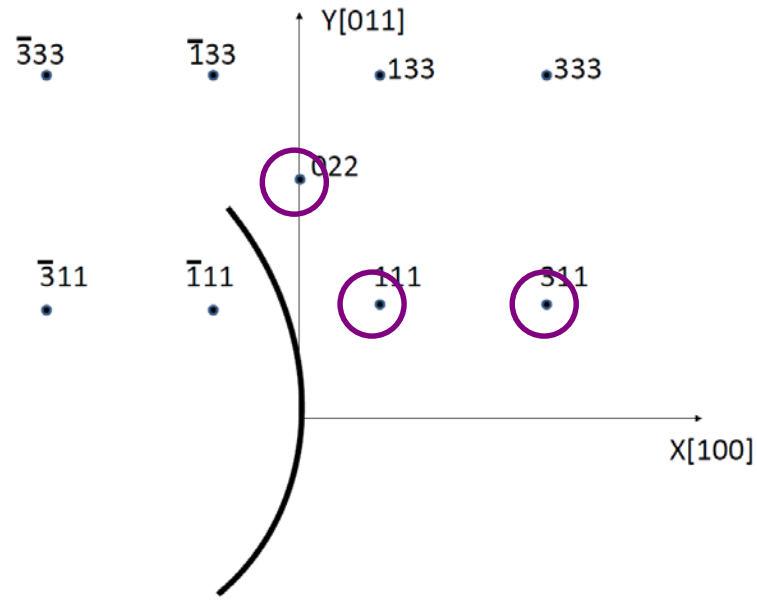

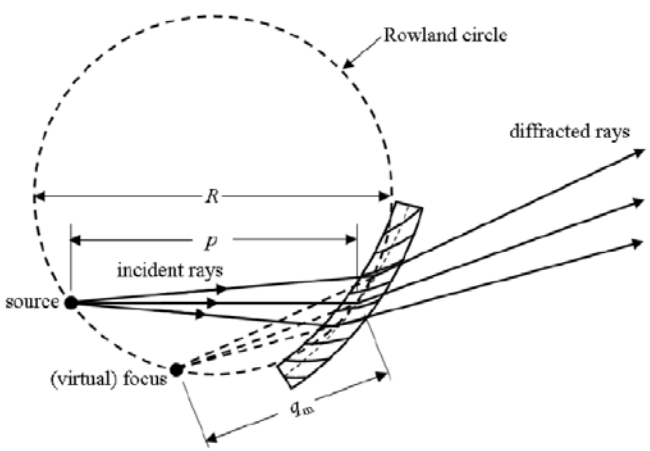

- Symmetrical crystal design, minimizes confusion
- 111 has large (35.3 degrees) asymmetry angle, high flux -> for imaging and diffraction
- 022 is symmetrical reflection, high resolution, low flux, has second harmonics -> for high resolution diffraction
- 311 is has high resolution and moderate flux, no second harmonics -> for diffraction
- 022 and 311 are about 30 degrees from nominal 111 position.

Crystal Design

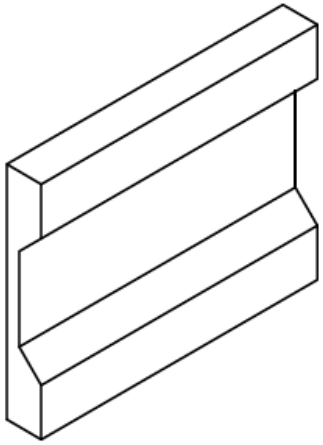

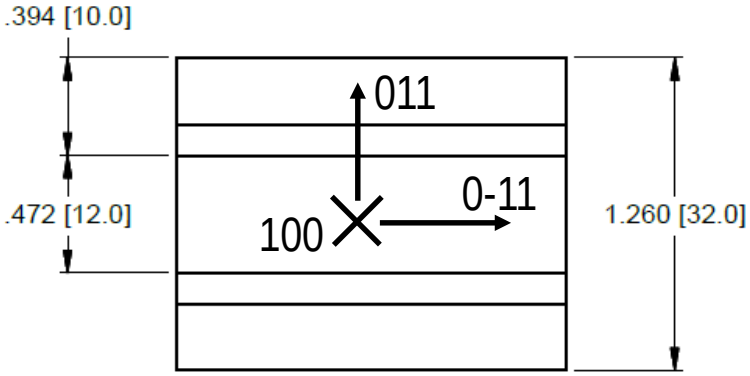

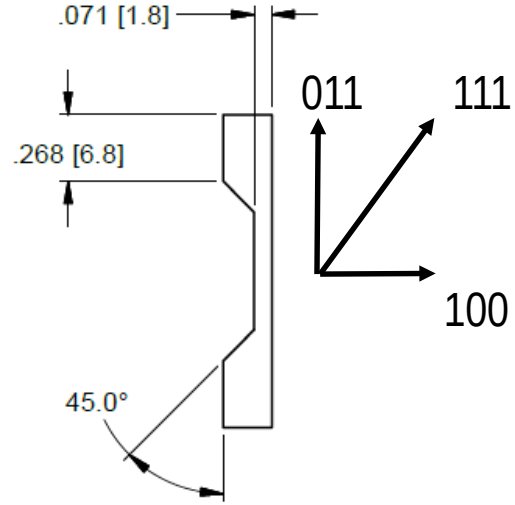

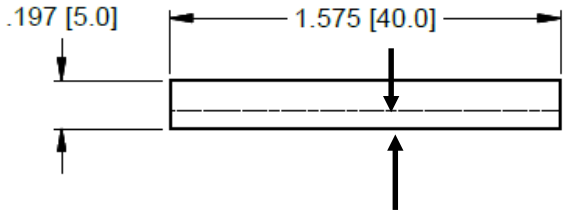

INFORMAL RELEASE
FOR QUOTES OR PROTOTYPE ONLY
NOT FOR PRODUCTION

1.8 mm (first crystal) – 2.2 mm(second crystal) thickness

- Floatzone Si
- Crystallographic designations (111, 100, 011, and 0-11) are reflection directions, not lattice planes
- The front face is polished to <1urads rms, <3A rms roughness and strain free
- Recessed face is lapped and etched

Imaging Monochromator Concept

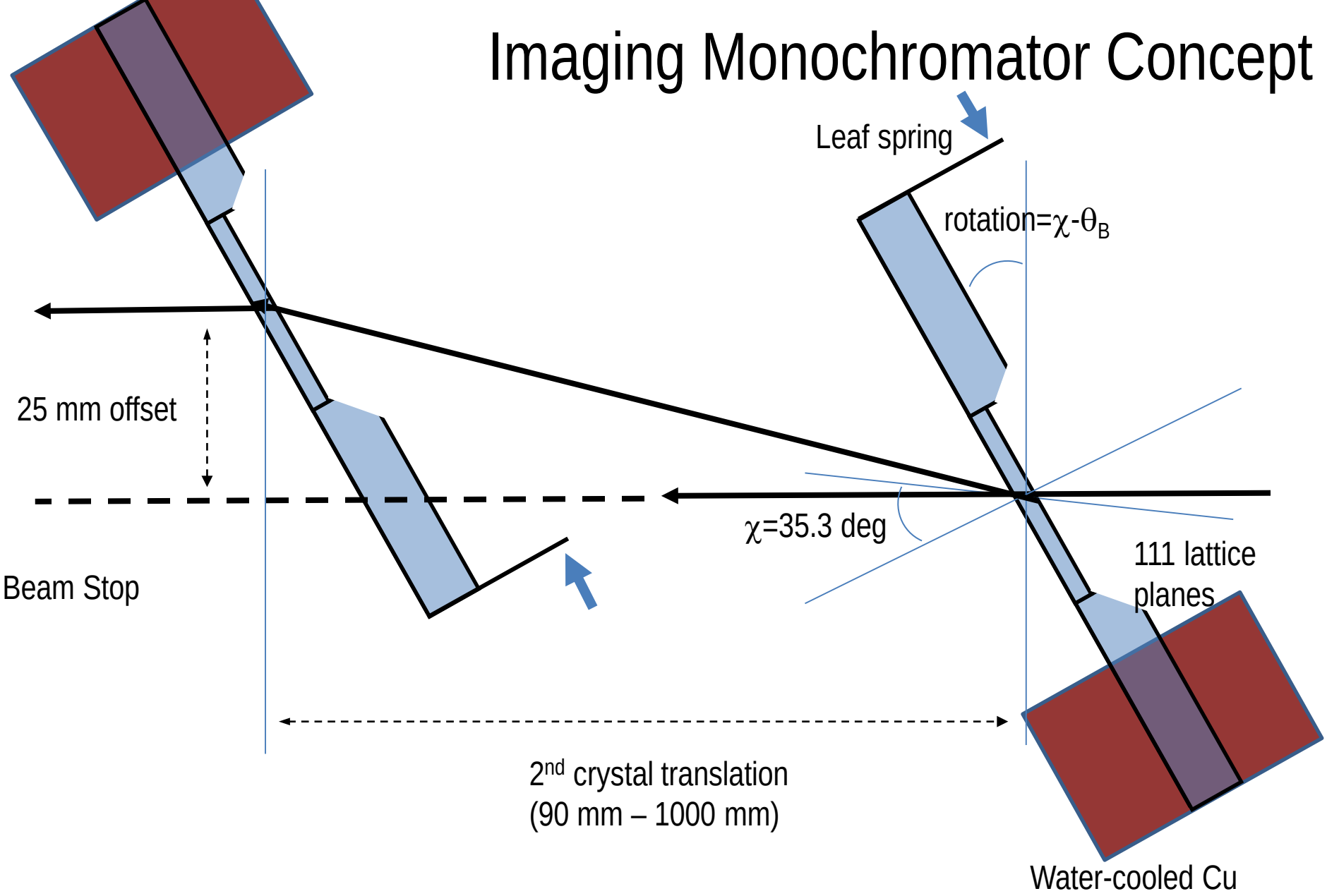

Incident beam size (31 mm H x 6.2 mm V)
Max. Absorbed Power is 270 W

Specification for Imaging Monochromator

Component	Specification	Notes
Mask	A water-cooled Copper mask should move +5 mm (up) to -40 mm with the first crystal, to protect the first crystal when it is translated in and out of the white beam. The white beam on the mask can be normal-incidence.	
First Crystal	12 mm (V) by 40 mm (H), 1.8 mm thick +- 36 deg. rotation in plane, -6.2 to 63.4 deg. surface angle, 0.001 deg. resolution 2 leaf spring bender. Bending radius (towards source) 10 m – infinity +5 mm (up) to -40 mm to move the first crystal out of the beam, , lateral motion can be considered as alternative	Water-cooling required
Second crystal	12 mm (V) by 40 mm (H), 2.2 mm thick 2 leaf spring bender. Bending radius (towards source) 10 m – infinity +- 36 deg. rotation in plane, -6.2 to 63.4 deg. surface angle 0.0001 deg. resolution +- 2 deg. tilt, 0.001 deg. resolution Distance to first crystal: 90 mm – 1 m z translation along beam 25 mm Y offset from first crystal, bender should not be in the white-beam.	Water-cooling not required
Compton shield	Water-cooled copper shielding around first crystal, ~3 mm thickness	
Beam stop	Water cooled copper block, coated with phosphor. At 1.2 m (z) from first crystal +5 mm (up) to -40 mm to move the beam stop out of beam	
Vacuum vessel and support	0.6 m width x 1.5 m length 2 Quartz view ports of 6 inch diameter	
Diagnostic flag	Near the exit port of vacuum vessel, 50 mm x 50 mm area to capture both transmitted and diffracted beams from 2nd crystal, 100 mm vertical motion	

Monochromator Design

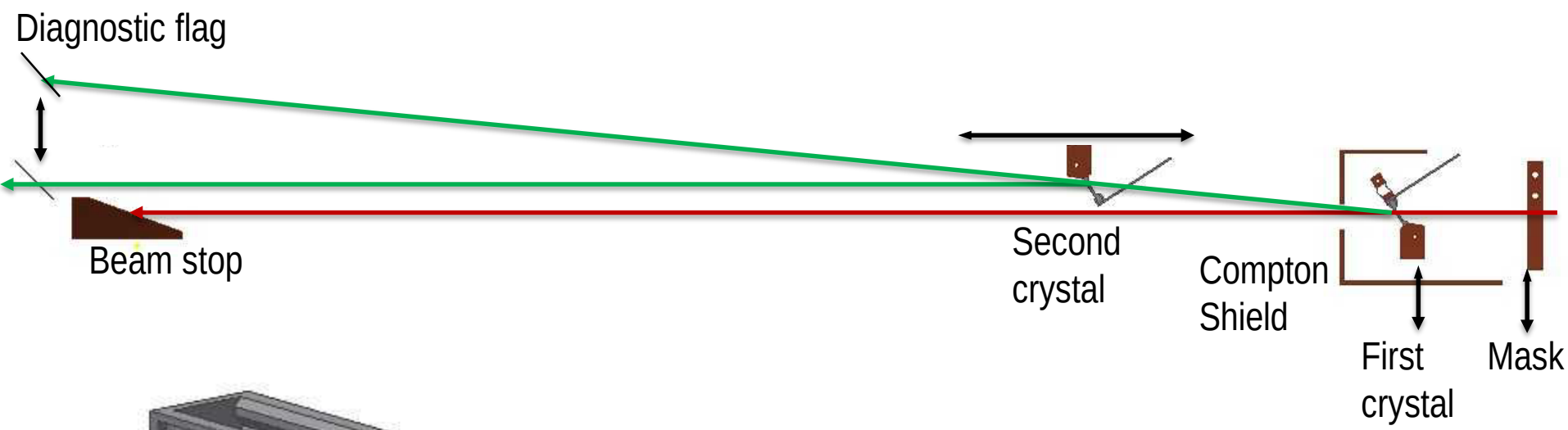

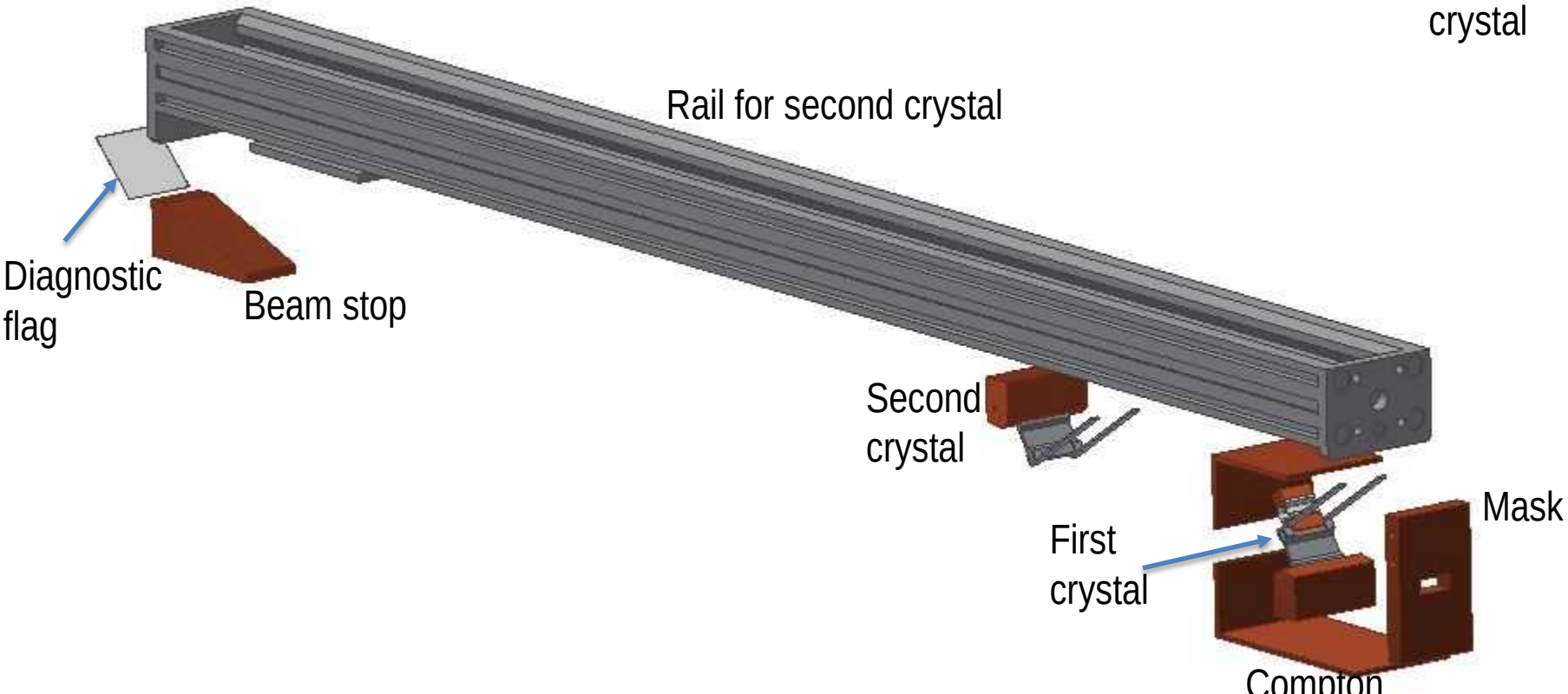

Micro-focusing optics

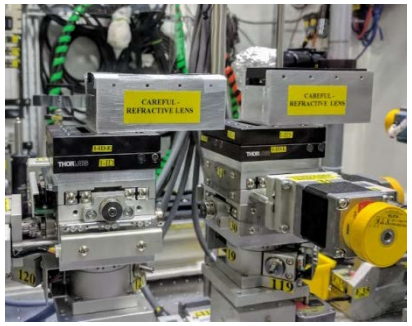

The requirements for micro-focusing:

- Spot size of less than 10 microns
- Option for line focusing is desirable
- Focal distance of about 2 m. The source distance is 100 m
- Ease of alignment/operation preferred

	Aperture	Line-focus	Energy tunability	White-beam compatible	In-line
K-B mirror	0.5 mm x 0.5 mm*	Yes	Easy	Yes	No
Bent Saw-tooth	1 mm x 1 mm	Yes	Relatively easy	No	Yes
Kinoform	0.3 mm x 0.1 mm	No	Difficult	No	Yes
CRL	~0.2 mm	No	Relatively easy	No	Yes

* Assuming 0.5 m long mirror at 1 mrad incidence angle

- Consider the K-B mirror as the first option due to its commercial availability, good energy-tunability, Line-focus capability, and large aperture
- Bent Saw-tooth optics as second option due to positive experience at APS-1ID, line-focus capability and large aperture.

Effect of source length on micro-focusing

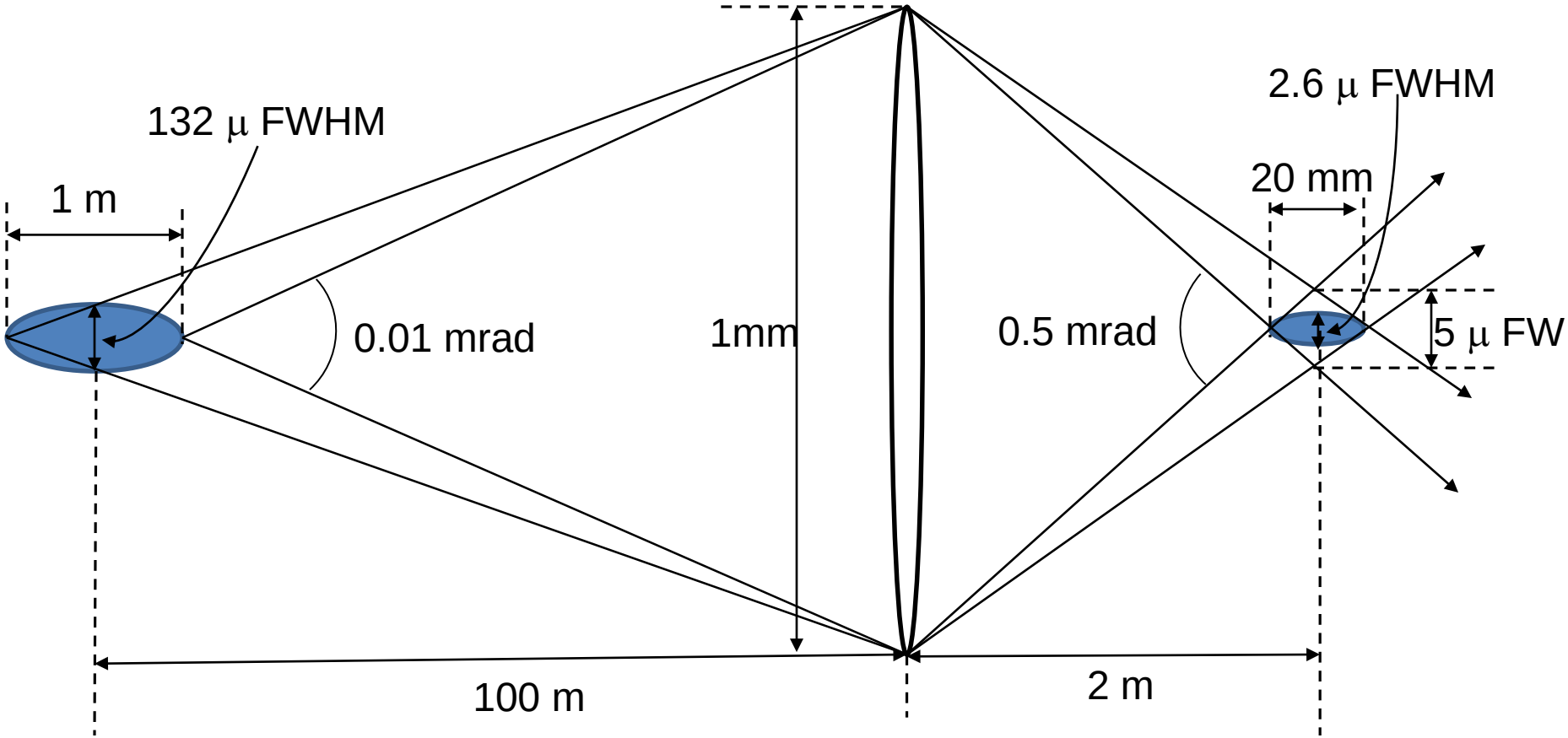

- The 1 m length of the wiggler at aperture of 0.01 mrad contributes to FWHM of 2.5 μ.
- Convolution of this with the 50X de-magnified source of 2.6 μ (H) x 0.14 μ (V) FWHM results in focal spot of 3.6 μ (H) x 2.5 μ (V) FWHM.
- Specify the figure errors of the focusing optics to contribute to <2μ in focal spot size.
- Slope-error <1 micro-radians at working distance of 2 m.

Specification for Micro-focusing Optics

Component	Specification	Notes
Micro-focusing optics	K-B mirrors (0.5 m length for each mirror) 30-~100 keV, 2m focal length, 1 micro-radians slope error Each mirror individually removable from the beam vacuum compatible	Desirable to have horizontal line focus

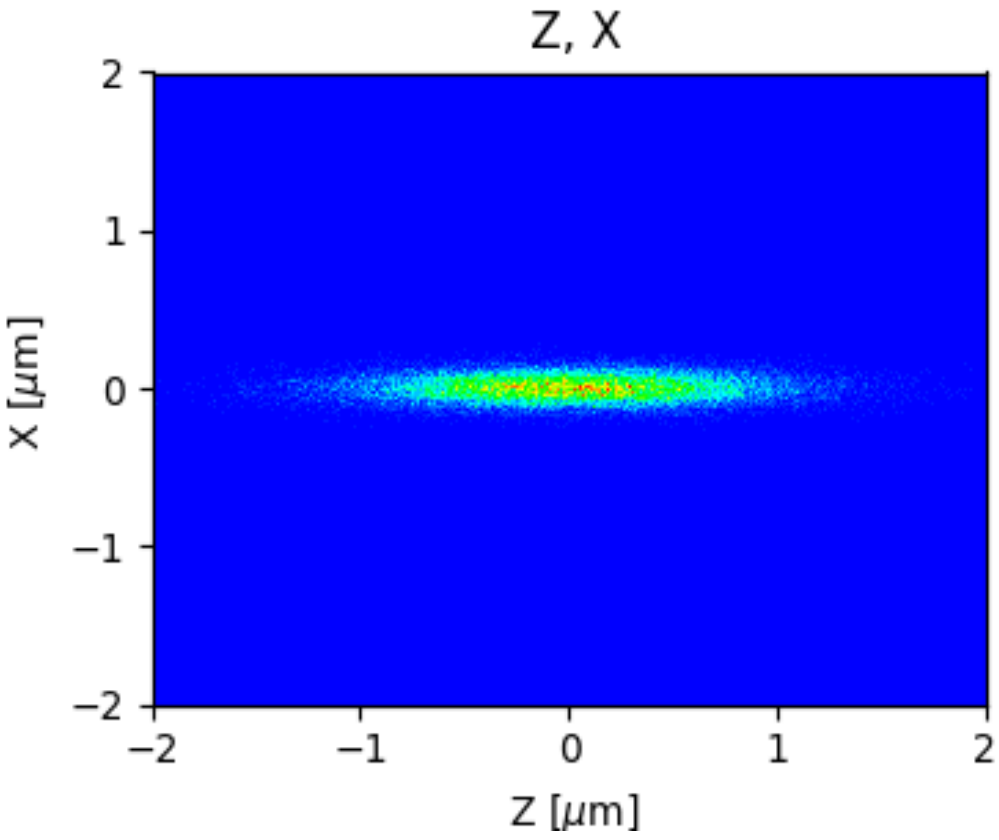

- Ray tracing ideal elliptical cylinder mirrors.
- The simulation yields a FWHM of 1.2 (H) x0.16 (V) focal size.

Heat load: manageable

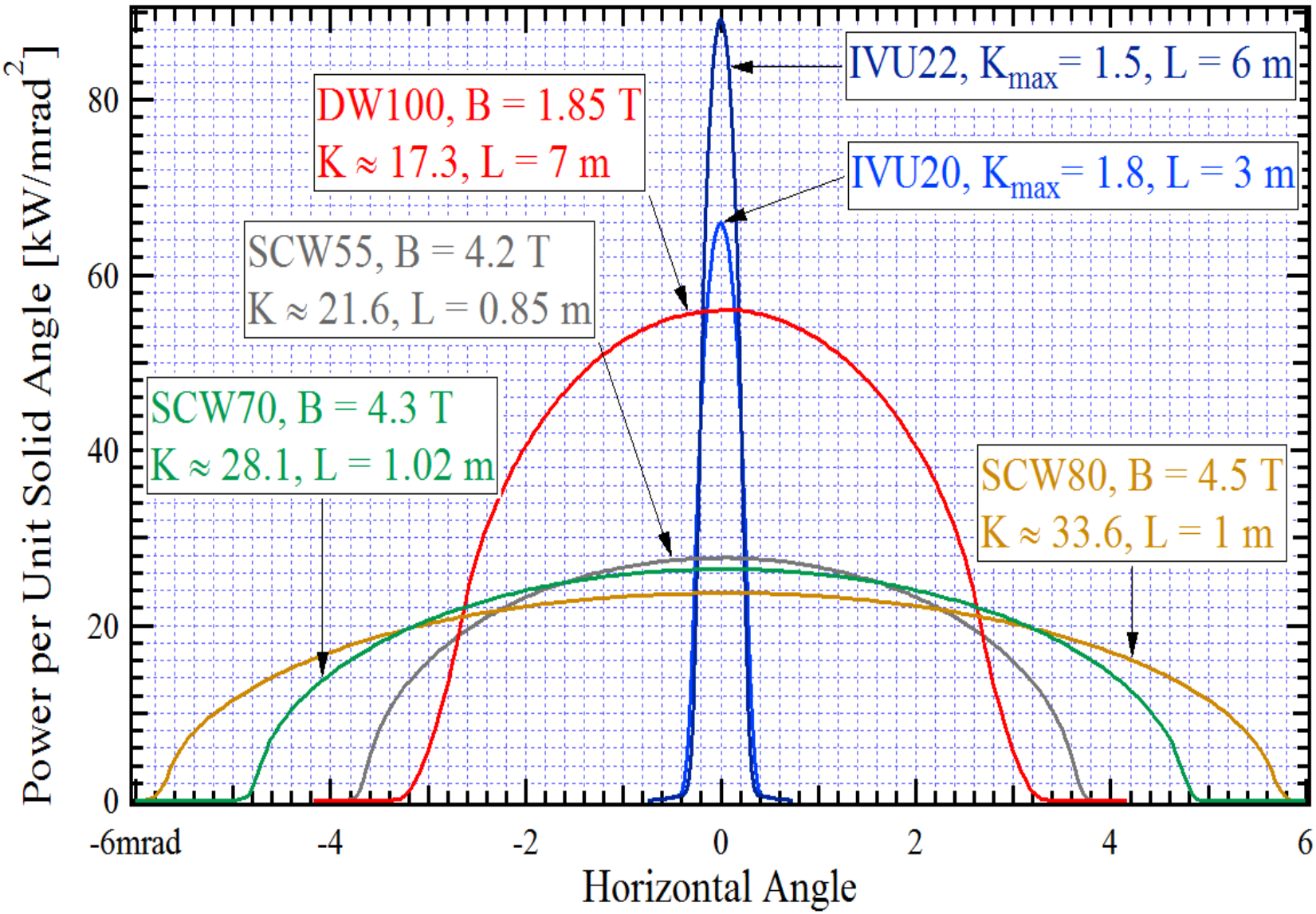

Filtering Scheme

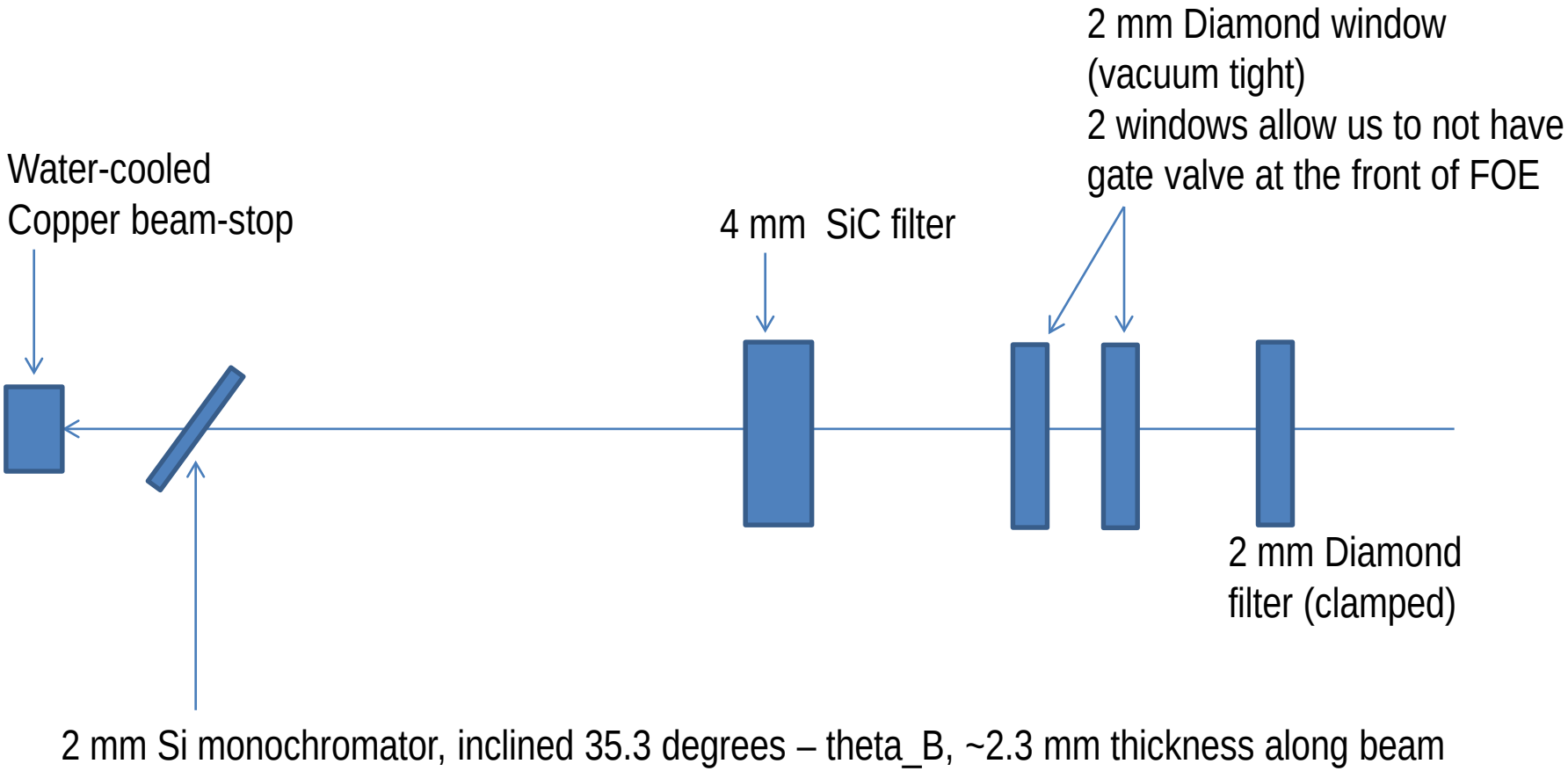

Heat load

	Material	Thickness Along Beam (mm)	Absorbed Power Density (kW/mrad^2)	Maximum Absorbed Power (W)	Maximum Temp. (deg. C)
Diamond filter 1 *	Diamond	2	6.37	1270	300
Diamond window 1	Diamond	2	3.14	628	
Diamond window 2	Diamond	2	2.38	476	
SiC filter 1 *	SiC	4	6.22	1244	600
Monochromator *	Si	2.3	1.36	272	30-130 (typical operation)
Beam stop	Cu	n/a	5.70	1040	

Informal review held Oct. last year

2 mm Diamond Filter FEA results

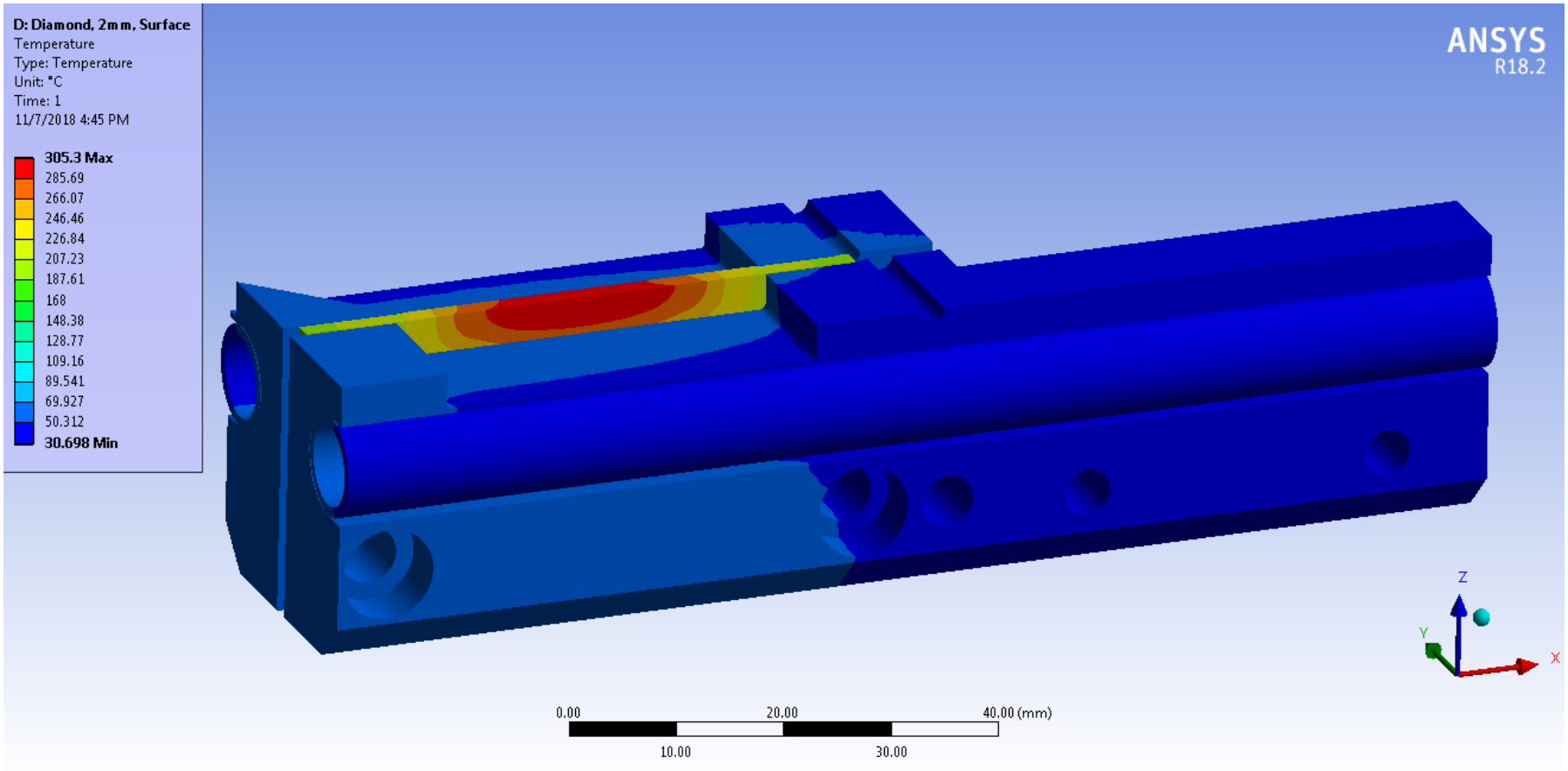

Design Concept of SiC filters

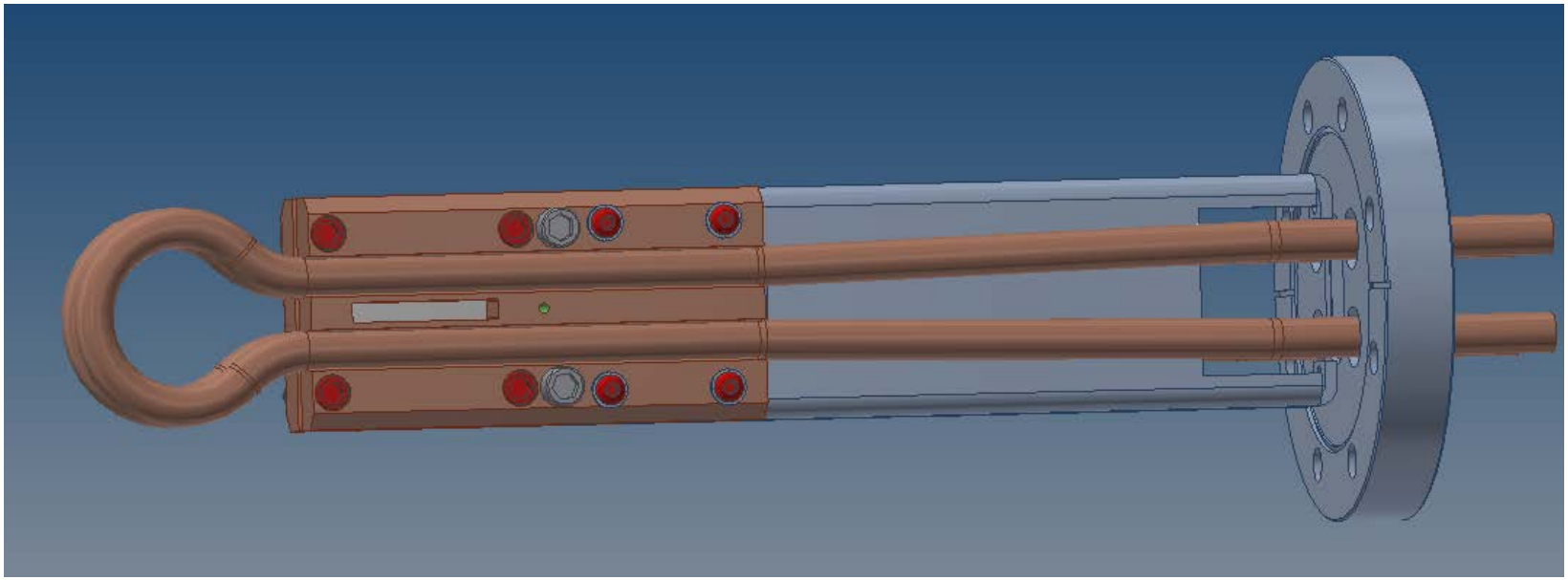

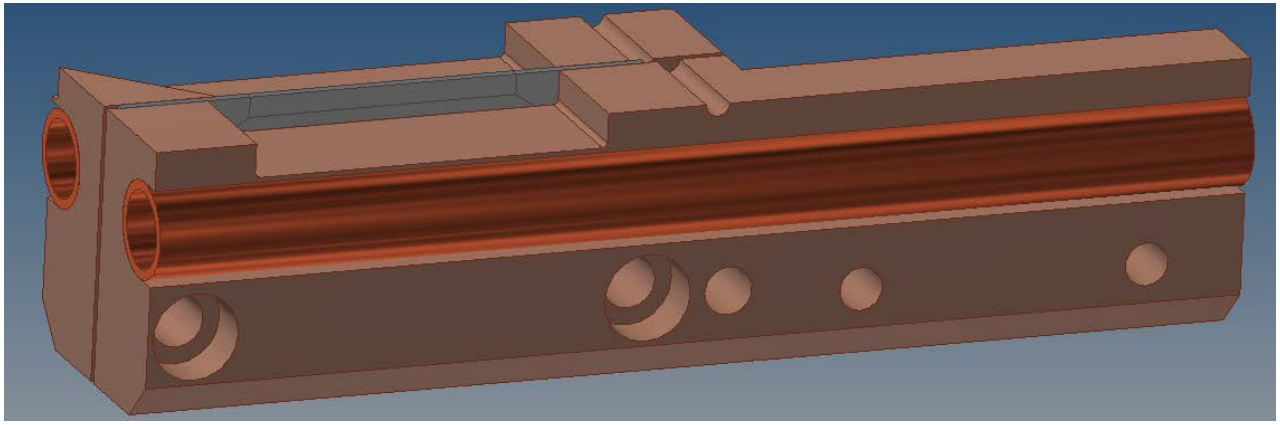

Design courtesy of FMB-Oxford/XPD

4mm SiC FEA results

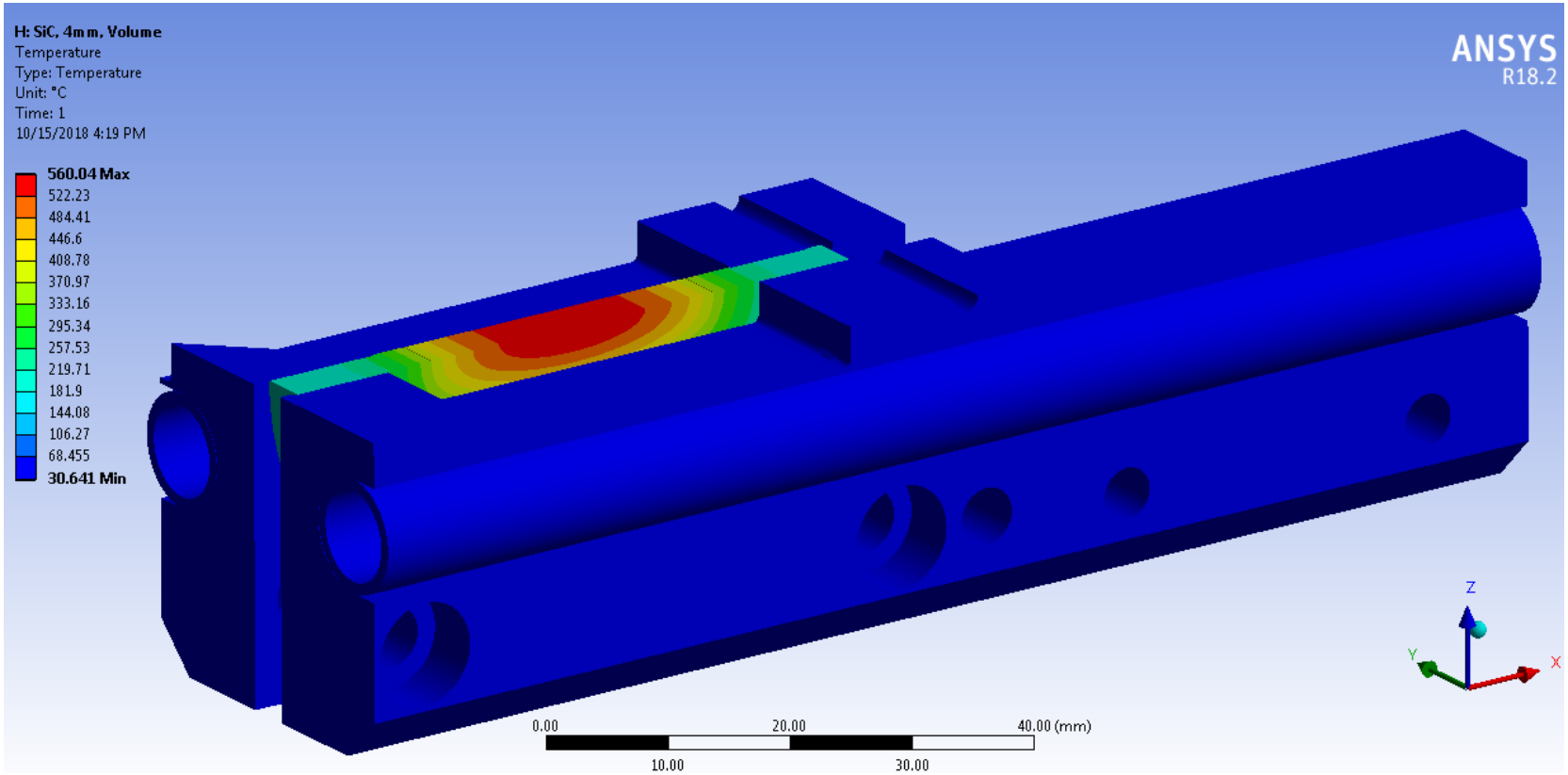

- For 4 mm SiC, 1244 W,
  - T=640 deg. C assuming surface heating,
  - T=560 deg. C assuming uniform volumetric heating
- Truth is in between: 600 deg.C (target temperature below 800 deg. C)

Heat load on Si monochromator

Mode	Absorbed Power Density (kW/mrad^2)	Filter	Beam Area at 100 m (mm x mm)	Maximum Absorbed Power (W)	Maximum Temp. (deg. C)
Diffraction (1 x 1 mm)	1.36	None	1 x 1	0.136	30
Imaging small Beam	1.36	None	10 x 10	13.6	68
Imaging Large beam	0.24	15 mm SiC	20x100	48	129
Worst-Case	1.36	None	20 x 100	272	1227

Heat load On Si monochromator

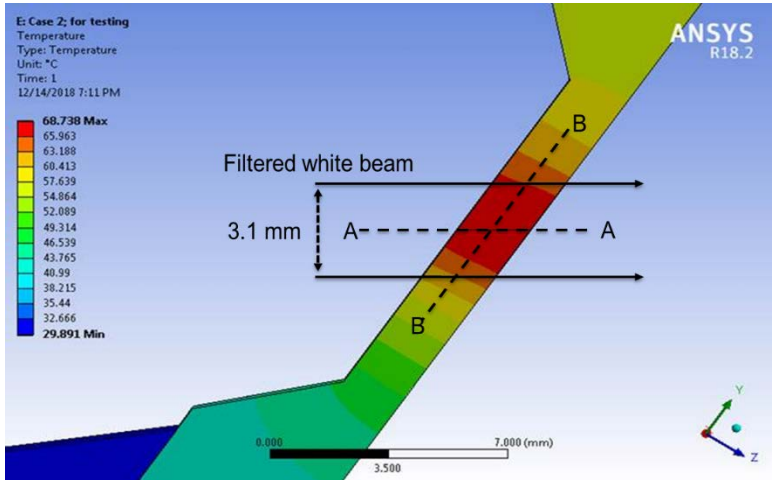

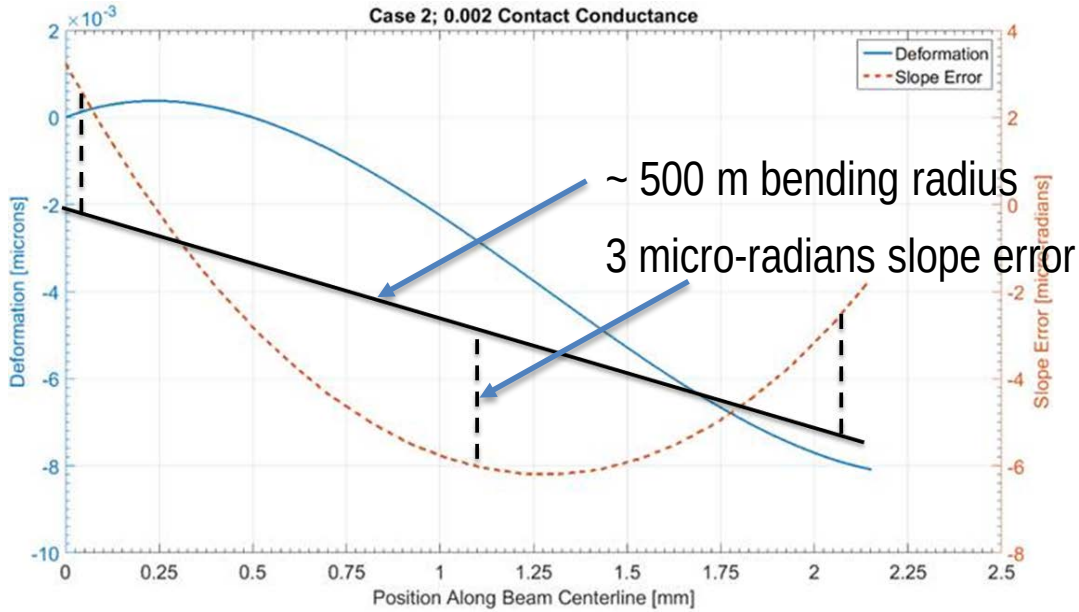

- Case 2 (Imaging with small beam) results shown. Case 3 (Imaging with large beam) results are similar.
- The residual slope error of 3 micro-radians is insignificant compared to the operating rocking curve width (> 100 micro-radians)
- The linear slope of represents a cylindrical bending radius of 525 meters -> insignificant compared to the crystal's designed bending radius of 10-30 m

Secondary Cooling

Without 0.2 mm thick silver foil cooling

Without secondary cooling

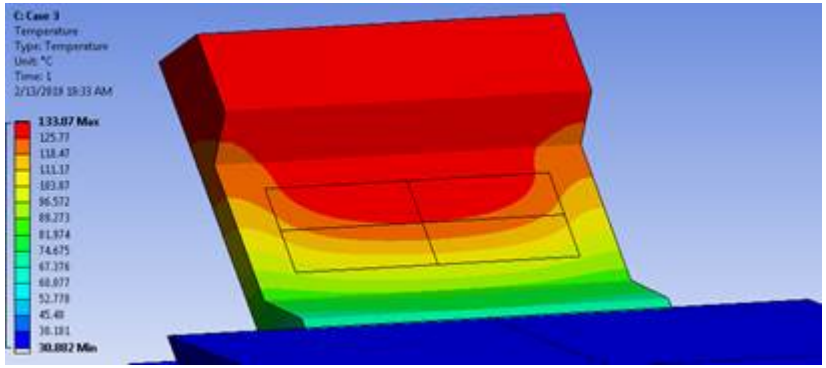

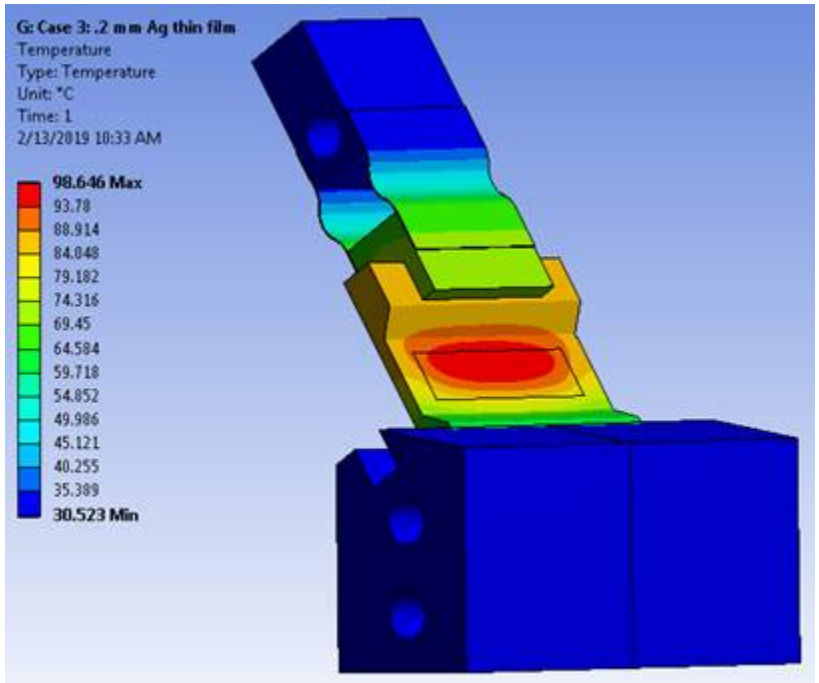

Cost/Schedule

Activity ID	Activity Name	Original Duration	Activity % Complete	Start	Finish	Budgeted Labor Units	Budgeted Nonlabor Units	Budgeted Total Cost
HEX Partner Beamline Rate Update		874		02-Jul-18 A	30-Dec-21	9765	4923657	$6,607,223
HEX Beamline		874		02-Jul-18 A	30-Dec-21	9765	4923657	$6,607,223
HEX Beamline Construction		874		02-Jul-18 A	30-Dec-21	9765	4923657	$6,607,223
HEX Photon Delivery System Procurement and Fabrication		555		02-Jul-18 A	17-Sep-20	0	3312007	$3,610,612
HEX12000	Photon Delivery System Delay Due to Funding Profile - 6M	52	100%	02-Jul-18 A	13-Sep-18 A	0	0	$0
HEX12040	Prepare Procurement Documentation	123	50%	14-Sep-18 A	15-Mar-19	0	0	$0
HEX12050	Accept Req at PPM	1	0%	18-Mar-19	18-Mar-19	0	0	$0
HEX12060	Prepare and submit RFP	10	0%	19-Mar-19	01-Apr-19	0	0	$0
HEX12070	Receive Proposals	20	0%	02-Apr-19	29-Apr-19	0	0	$0
HEX12080	Evaluate Proposals	20	0%	30-Apr-19	28-May-19	0	0	$0
HEX12090	Negotiate with Offerors	10	0%	29-May-19	11-Jun-19	0	0	$0
HEX12010	HEX - Review Scope and Budget Prior to Mono and Non Optic	5	0%	12-Jun-19	18-Jun-19	0	0	$0
HEX12100	Prepare &Approve Contract Package	17	0%	12-Jun-19	05-Jul-19	0	0	$0
HEX12110	Contract Award	1	0%	08-Jul-19	08-Jul-19	0	0	$0
HEX12020	HEX - PDR, Status and FAT visits to Vendors	301	0%	09-Jul-19	17-Sep-20	0	30000	$42,005
HEX12130	PDS Procurement and Fabrication	301	0%	09-Jul-19	17-Sep-20	0	3080907	$3,343,593
HEX12030	Procure Vacuum Pump and Gauge Controllers and Cables (12	60	0%	24-Jun-20	17-Sep-20	0	201100	$225,013
HEX Photon Delivery System Installation and Test		687		03-Apr-19	30-Dec-21	9285	2500	$1,146,190
HEX12340	HEX - Engineering and Installation Oversight	647	0%	03-Apr-19	29-Oct-21	3865	0	$521,132
HEX12350	HEX - Beamline Technician Effort	500	0%	02-Jan-20	30-Dec-21	2988	0	$308,449
HEX12360	Special White Beam Shutters Installation and Testing	10	0%	18-Sep-20	01-Oct-20	60	0	$7,394
HEX12410	Non-optics components Installation and Testing	131	0%	18-Sep-20	31-Mar-21	0	0	$0
HEX12420	Laue mono Installation and Testing	131	0%	18-Sep-20	31-Mar-21	0	0	$0
HEX12370	HEX - Photon Delivery System Installation and Test Labor	131	0%	18-Sep-20	31-Mar-21	1584	0	$203,260
HEX12380	Additional Rigger Hours	131	0%	18-Sep-20	31-Mar-21	748	0	$97,360
HEX12390	HEX - EEI Labor for Electrical Inspection	131	0%	18-Sep-20	31-Mar-21	40	0	$5,668
HEX12400	HEX - PPE Costs (Safety shoes, Glasses etc.)	5	0%	02-Oct-20	08-Oct-20	0	2500	$2,927
HEX12430	HEX - All Beamline components testing complete	0	0%		31-Mar-21	0	0	$0
HEX End Station Procurement and Fabrication		251		22-Jan-20	21-Jan-21	0	1609150	$1,800,498
HEX12440	Order End Station Components	1	0%	22-Jan-20	22-Jan-20	0	0	$0
HEX12450	Procure Beam conditioning table, Imaging and EDXD detector	250	0%	23-Jan-20	21-Jan-21	0	307000	$343,506
HEX12445	Procure KB-Mirror	250	0%	23-Jan-20	21-Jan-21	0	400000	$447,565
HEX12470	Procure Lead scatter shield (wall)	250	0%	23-Jan-20	21-Jan-21	0	12600	$14,098
HEX12500	Procure Sample table and stages. EDXD 2-theta arm and two s	250	0%	23-Jan-20	21-Jan-21	0	273321	$305,822
HEX12510	Procure Small misc parts for E/S (optics hardware, sample holc	250	0%	23-Jan-20	21-Jan-21	0	25000	$27,973
HEX12520	Procure Imaging Detectors (X-Ray Converter, Lens attachment,	250	0%	23-Jan-20	21-Jan-21	0	310000	$346,863
HEX12530	Procure ADXD Flat Panel detector, Frame Grabber	250	0%	23-Jan-20	21-Jan-21	0	112007	$125,326
HEX12590	Procure EDXD Ge single element detector (eg Canberra)	250	0%	23-Jan-20	21-Jan-21	0	36000	$40,281
HEX12610	Procure EDXD Ge multi element detector (Siddons design)	250	0%	23-Jan-20	21-Jan-21	0	100000	$111,891
HEX12620	Procure Beam Stop	250	0%	23-Jan-20	21-Jan-21	0	10000	$11,189
HEX17910	Procure MCA for EDXD Detector	250	0%	23-Jan-20	21-Jan-21	0	23222	$25,983
HEX End Station Installation and Test		125		22-Jan-21	20-Jul-21	480	0	$49,923
HEX12630	G Endstation & Detector Installation and Testing Placeholder	120	0%	22-Jan-21	13-Jul-21	480	0	$49,923
HEX12640	HEX - All End Station Installation & Testing Complete	5	0%	14-Jul-21	20-Jul-21	0	0	$0

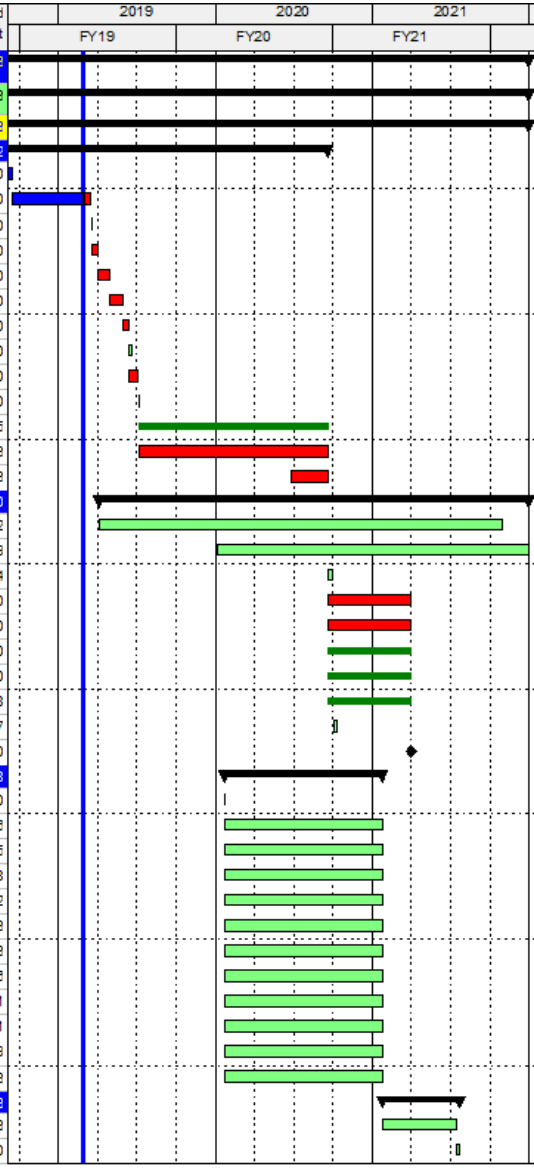

Summary

- **Optics:** HEX optics are simple and elegant. Optical design, specification and simulations are complete.
- **Technical feasibility:** Many technical challenges overcome. BNL expertise with high-energy x-ray optics.
- **Heat load** is large, but manageable.
- We are well-positioned, and excited to proceed to procurement.

Thanks To

- **NSLS-II** Andrew Broadbent, Mike Lucas, Eric Dooryhee, David Sprouster, Milinda Abeykoon, Ken Evans-Lutterodt, Sanjit Ghose, Wah-Keat Lee, Hengzi Wang, Oleg Tchoubar, Weiming Guo, Steve Hulbert, Pete Siddons, Lonny Berman, Sushil Sharma, Hui Zhong
- **User Community**
  - Esther Takeuchi, Feng Wang, Can Erdonmez
  - Mark Croft, Thomas Tskakalakos, Koray Akdogan
  - John Parise, Don Weidner, Lars Elm, Jiuhua Chen, Xinguo Hong, Avraham Dilmanian
  - Dan Steingart, Josh Gallaway
  - Yan Gao, Juliana Cernatescu, Alex Ignatov
  - Nick Simos, Lynne Ecker
- **Advisers** Ke Yang, Cai Quan, Michael Drakopoulos, John Okasinski, Jon Almer, Shastri Sarvjit, Xianbo Shi, Dean Chapman,Tomasz Wysokinski, Peter Ko, Daniel Hausermann, William Thomlinson
- **Management** Qun Shen, Ron Pindak, Paul Zschack, Erik Johnson, Jim Misewich, and John Hill
- **NSLS-II CAMs** Greg Fries, Chris Stebbins, Timur Shaftan, Steve Hulbert, Toshi Tanabe, Charles Hetzel, Richard Farnsworth, Zhijian Yin, Ed Haas, John Gosman, George Ganetis, Chris Amundsen, Bernard Kosciuk, Raj Gutta, Mo Benmerrouche, Lori Stiegler, Joe Zipper