HEX-Superconducting Wiggler and Straight Section

Toshi Tanabe
ID Group Leader

HEX-FDR April 1st, 2019

U.S. DEPARTMENT OF ENERGY | Office of Science
BROOKHAVEN NATIONAL LABORATORY

Outline

- Final specifications –RSI ver. 10.
- Reference Design
- Spectra
- SCW Procurement Status
- Straight Section Details
- Magnetic Measurement Plan
- Summary

HEX-SCW Current Specs for Users (RSI ver.10)

Beamline	HEX and MRE
Type	SCW
Device envelope length	~1.8 m
Magnetic Length	1.2m nominal (29 main and 4 partial poles)
Canted	No
Period: nominal	70 mm
Nominal (minimum) gap of vacuum bore tube	10 mm TBC
Peak field nominal	4.3 T
Keff: nominal	28.1
Energy Range:	8 keV –200 keV
Power total: nominal	55.7 kW
Max.power per unit solid angle: nominal	28.4 kW/mr^2
Straight	Low beta
Device center	May be offset in the straight towards the downstream end.
Power density distribution angle *1 (mrad H) : nominal (maximum)	9.87 (10.15)
Power density distribution angle *1 (mrad V) : nominal (maximum)	0.88 (1.47)
Gap scanning and other requirements	Current adjustment 0 – 100%

Note 1: The fan angles of the radiation quoted here are as seen at 16m from the source, and take into account the effects of source length; the worst case fan size is taken. The two values quoted are for the points where the power density falls to values that are 1% and 0.1% of the central value. Designs of the fixed mask entrance shall take into account these fringe power loads.

Spectra

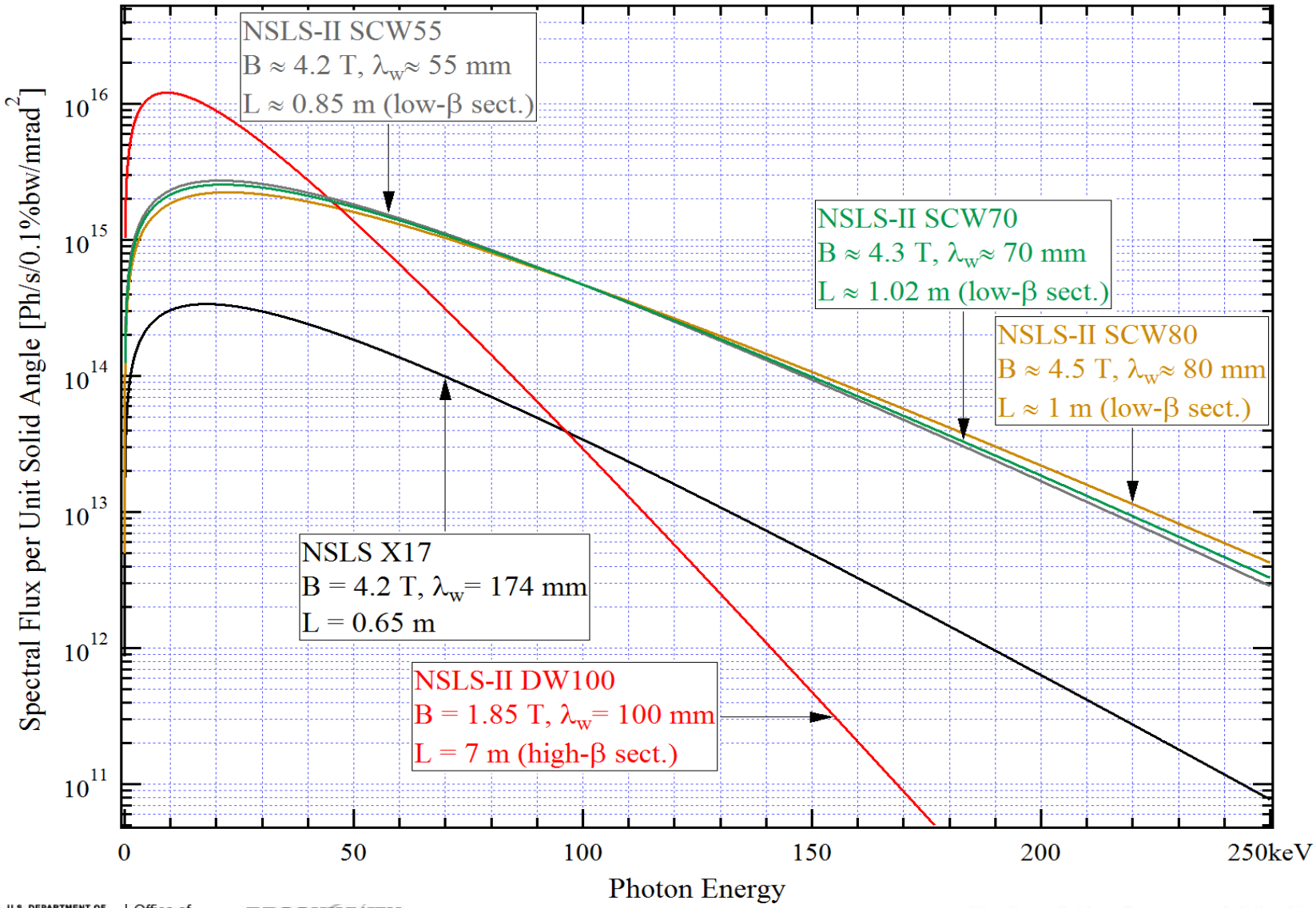
NSLS-II SCW55
B ≈ 4.2 T, λw≈ 55 mm
L ≈ 0.85 m (low-β sect.)
NSLS-II SCW70
B ≈ 4.3 T, λw≈ 70 mm
L ≈ 1.02 m (low-β sect.)
NSLS-II SCW80
B ≈ 4.5 T, λw≈ 80 mm
L ≈ 1 m (low-β sect.)
NSLS X17
B = 4.2 T, λw= 174 mm
L = 0.65 m
NSLS-II DW100
B = 1.85 T, λw= 100 mm
L = 7 m (high-β sect.)
Spectral Flux per Unit Solid Angle [Ph/s/0.1%bw/mrad2]
10^16
10^15
10^14
10^13
10^12
10^11
0
50
100
150
200
250keV
Photon Energy

HEX-SCW Reference Design (10 pole Model)

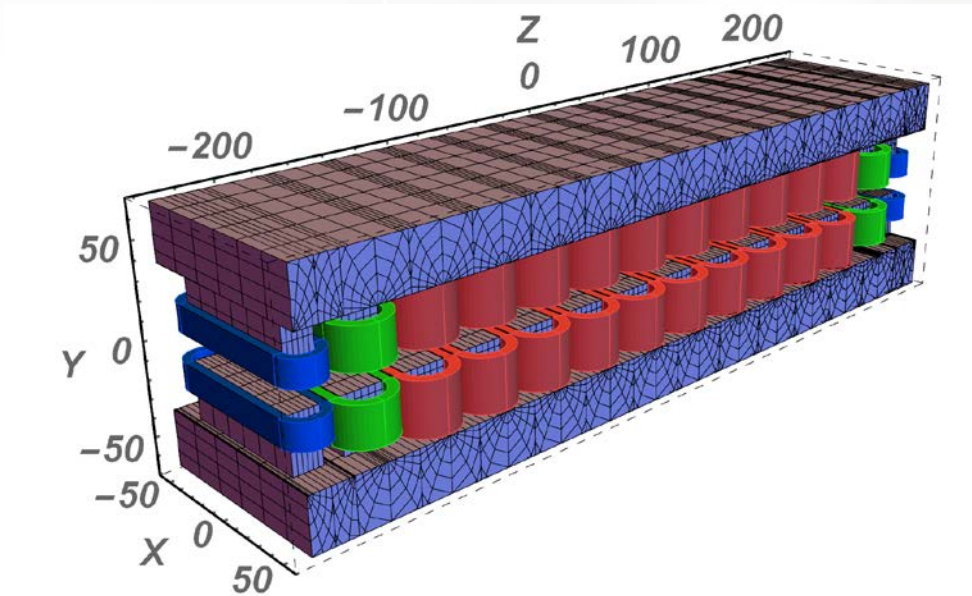

Magnetic Length	1.2m nominal (29 main and 4 partial poles)
Period: nominal	70 mm
Yoke Gap	15.2 mm
Peak field: nominal	4.3 T
Pole width	80mm
Main (red) Coil Height	29.5mm
Main Coil Thickness	6.3mm
Main Yoke Thickness	22.4mm
End Yoke Thickness	14.336mm
Green Coil Height	22.125mm
Blue Coil Height	14.16mm
Yoke Material	1006 Steel
Nominal Engineering Current Density@4.3T	900A/mm^2

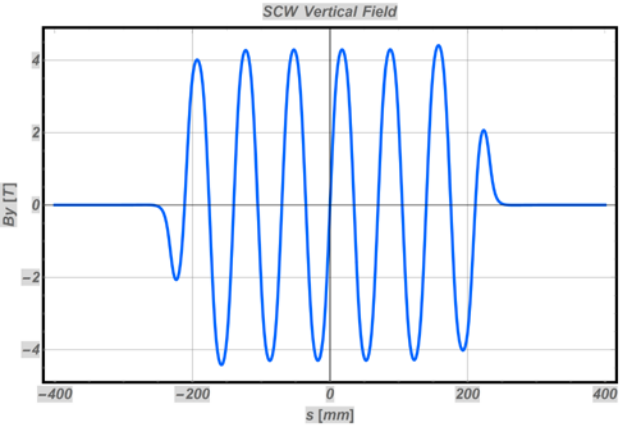

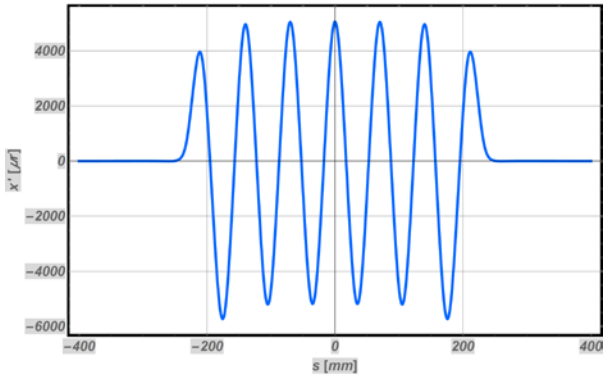

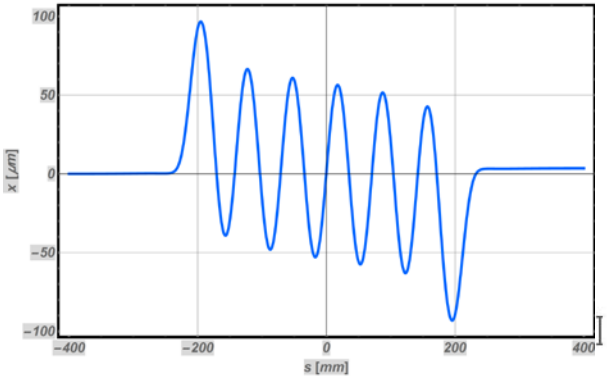

Cryostat for SC magnet with indirect cooling

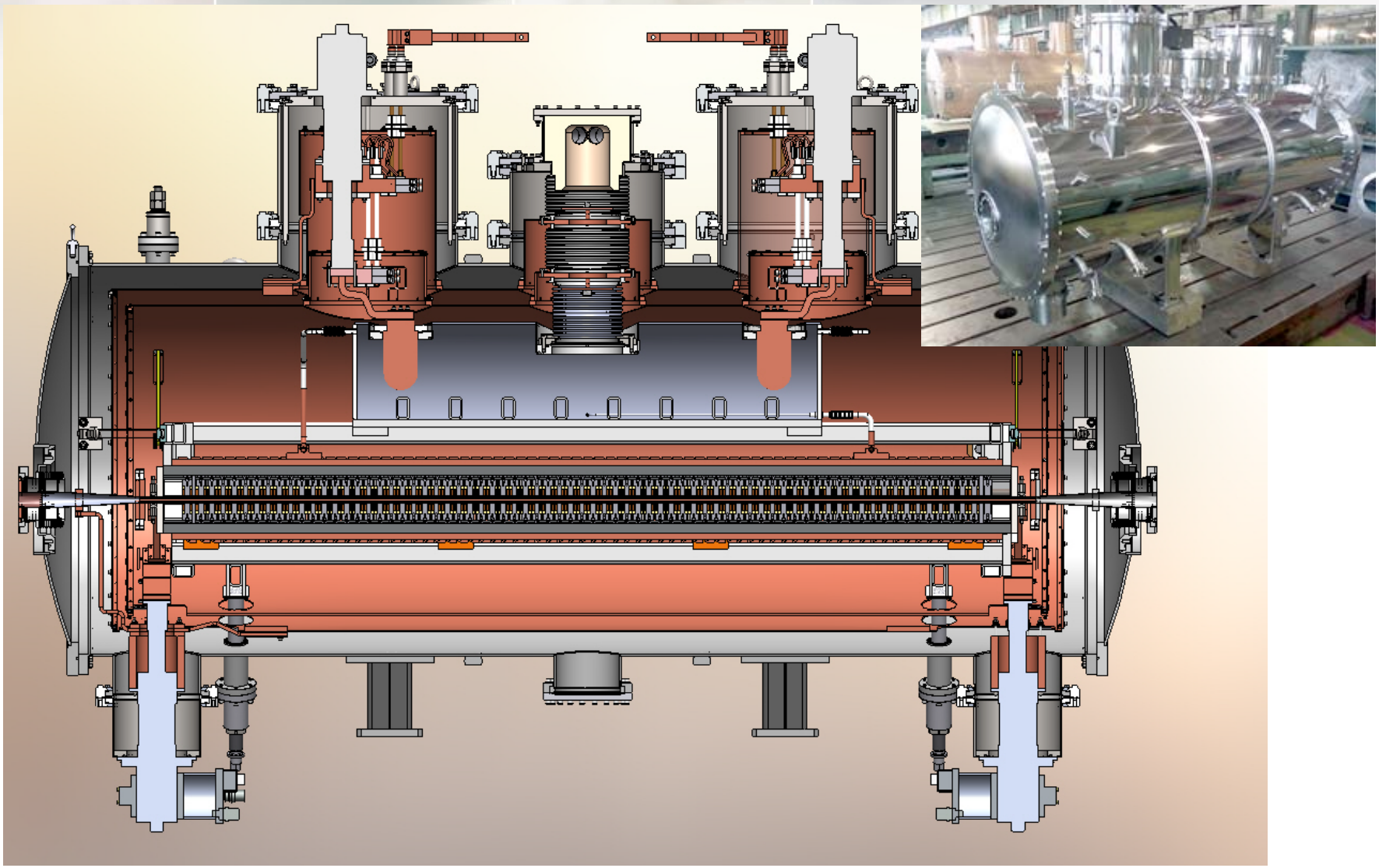

Budker Coils

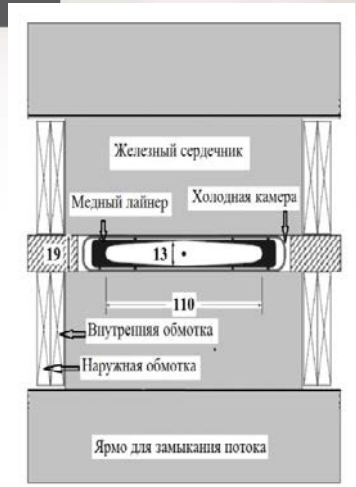

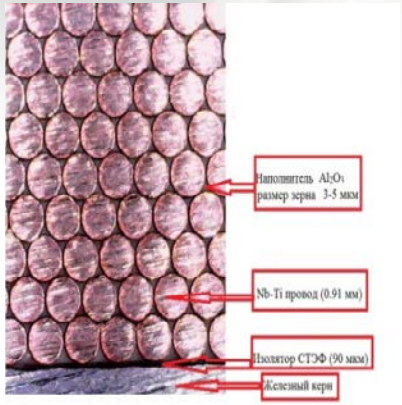

Wiggler coils

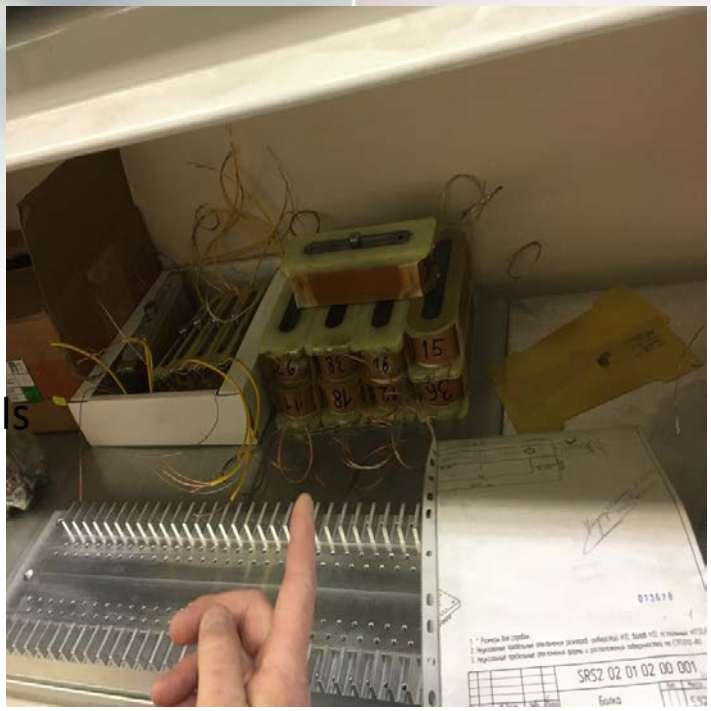

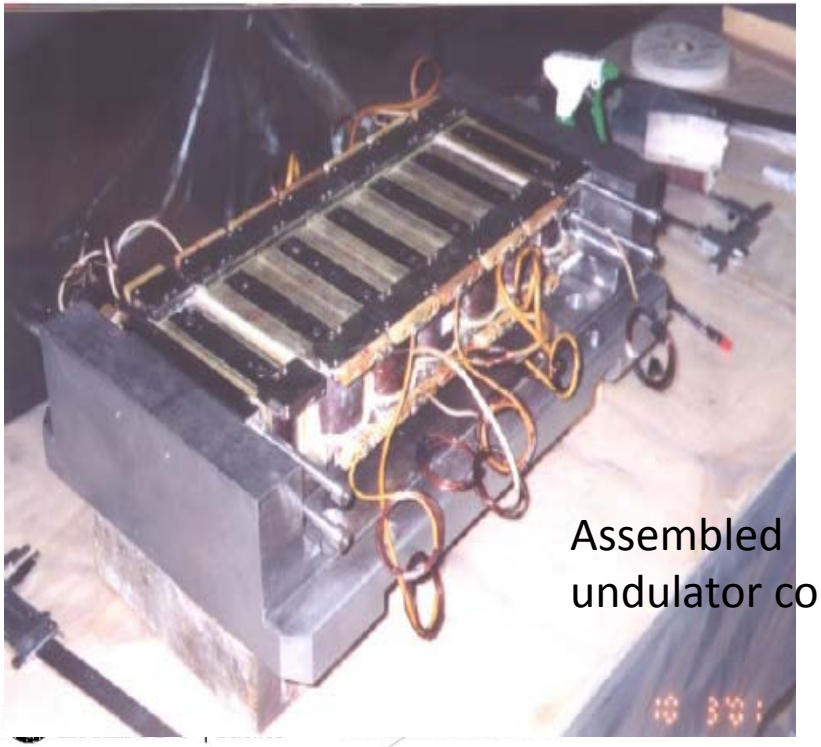

Assembled undulator coils

Beam chamber + liner

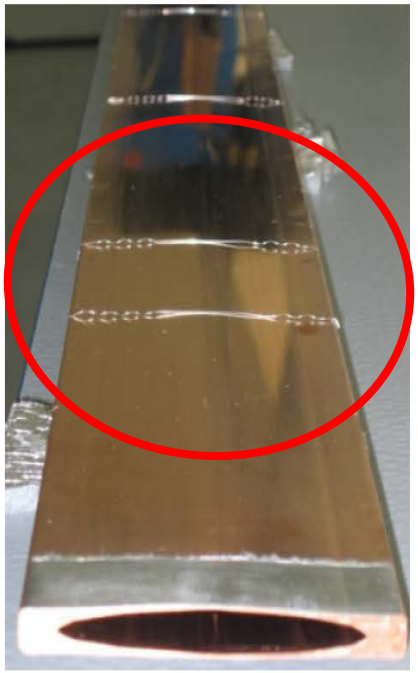

Рисунок 287. Спираль из нержавеющей проволоки.

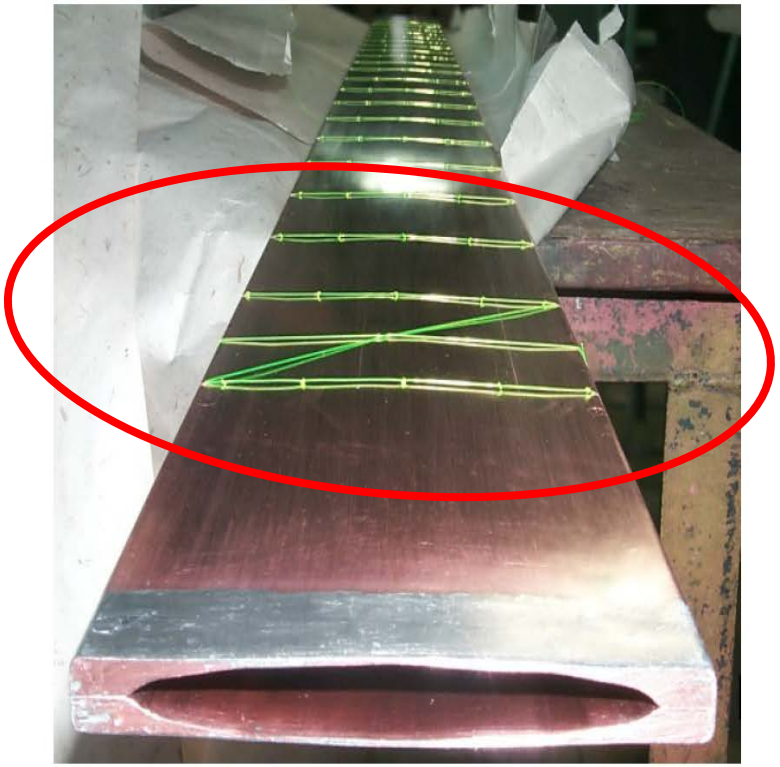

Рисунок 288. Нейлоновая леска с узлами.

SCW Procurement Status

- The RFP has been sent to the suggested sources and posted on Fed Biz Ops on February 15th, 2019.
- Four interested vendors who we believe will bid.
- The deadline is now April 26th due to a bid extension request.

- Straight Section Details (by Charles Hetzel)

Straight Section

- Device will be shifted downstream by 1m. Approved by accelerator physics group.
- BPMs installed on adjacent chambers
- Valves will be installed on both ends of the device to allow baking of surrounding components

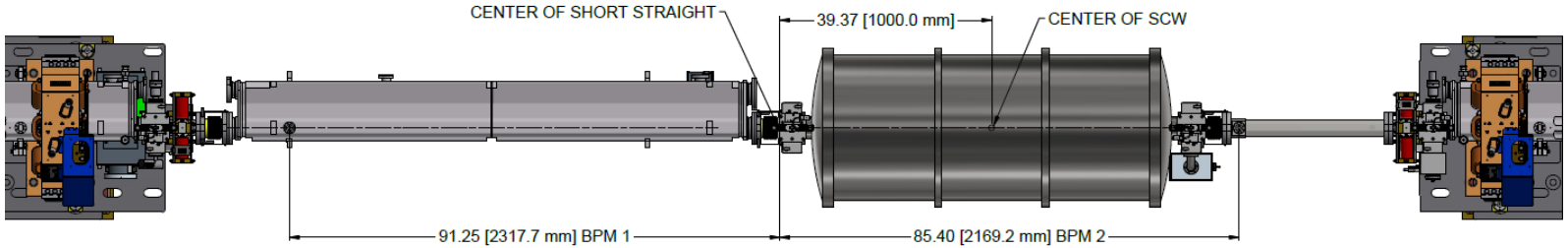

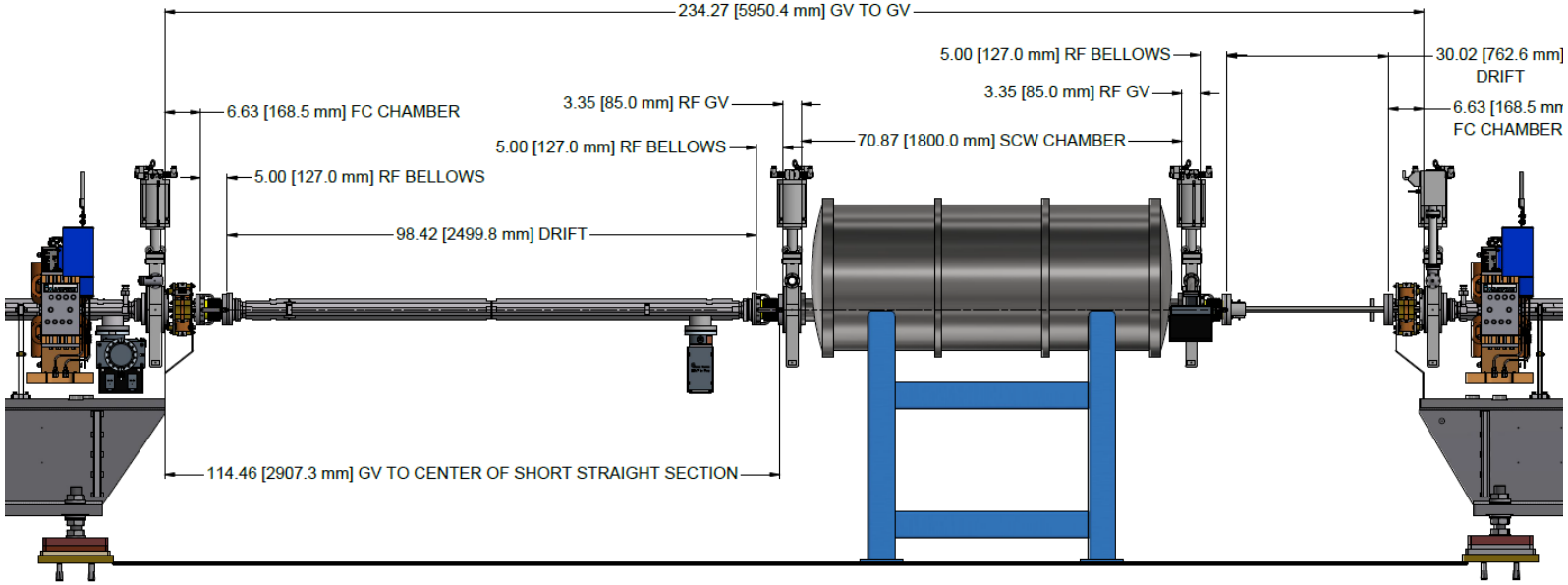

G2-G3 Interconnect

- Modifying G2 chamber would require the splitting of accelerator magnets
- 1m device shift allows x-ray fan to safely exit G2
- Remove stick absorber from G2 (same as DW)
- Add flange absorber (same as DW)

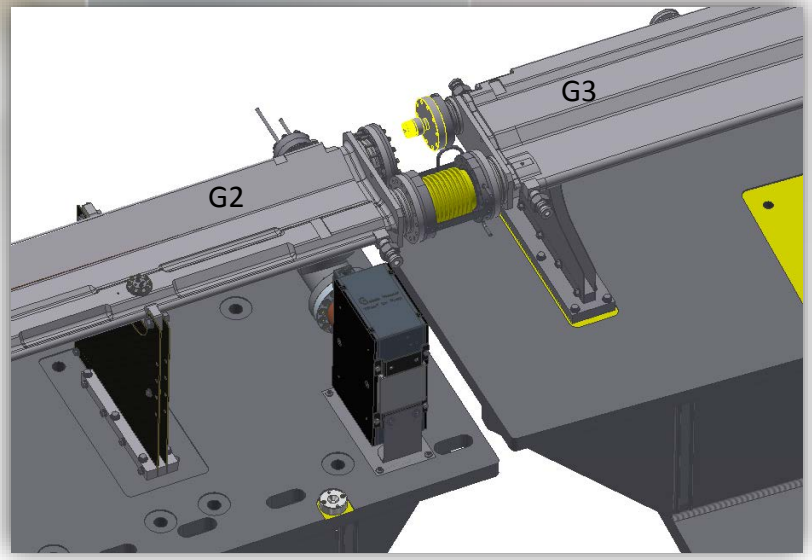

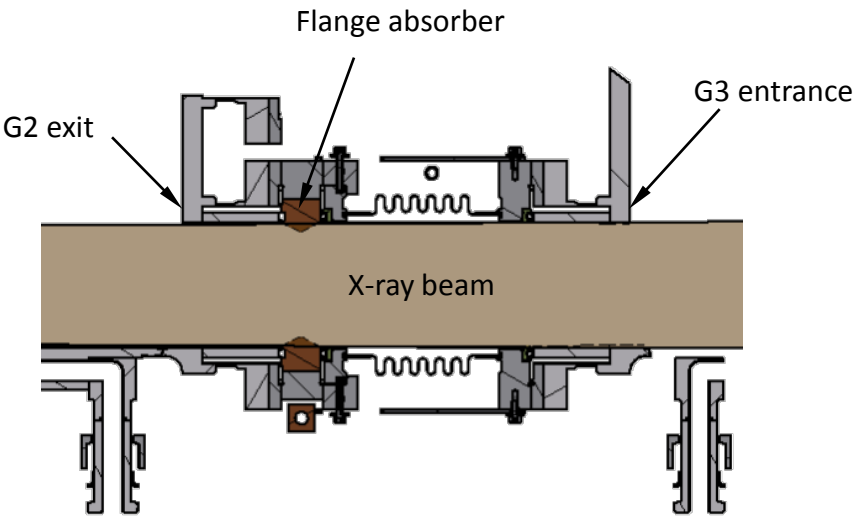

Device at center of SS

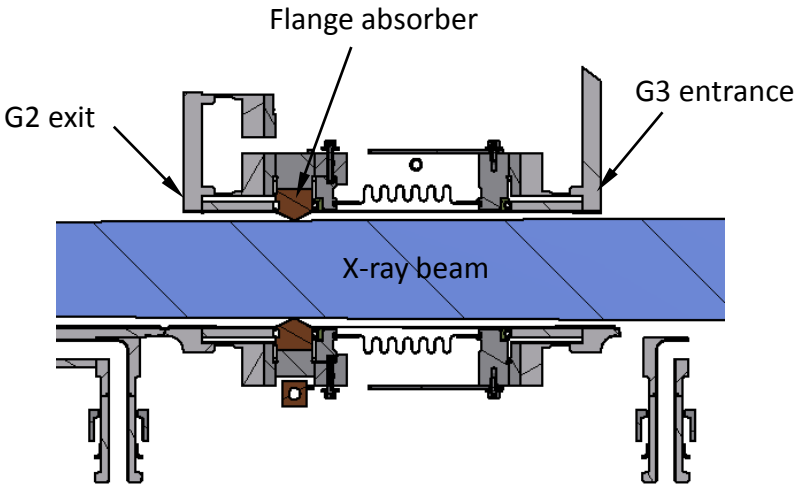

Device shifted DS 1m

Crotch Absorber (CABS)

- CABS aperture increased from 75mm to 90mm
  - Current aperture shadows the current exit flange
  - New aperture can be cut into the existing design
  - Cooling tubes will not need to be modified

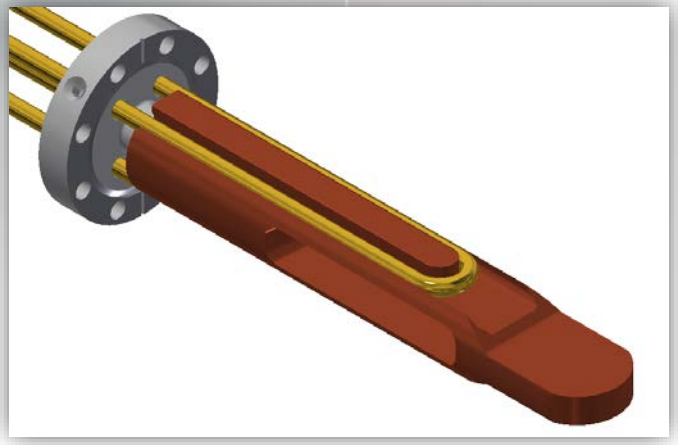

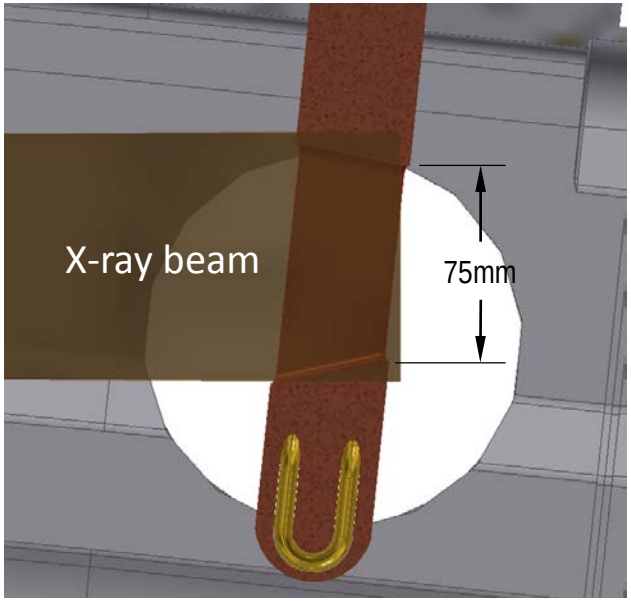

Standard aperture (75mm)

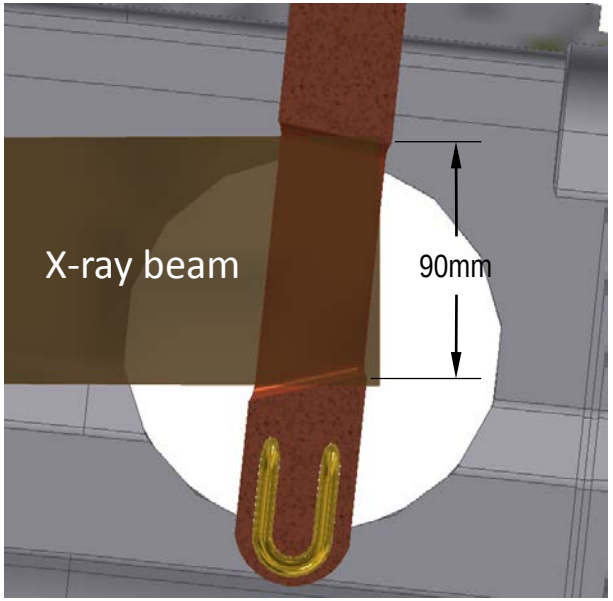

New aperture (90mm)

G3 Exit Flange

- Increase opening in existing adapter plate
- Larger ConFlat flange required
- Modifications required to dipole standard chamber
  - Cut off existing exit flange
  - Machine wider opening
  - Add weld prep for new flange
  - Weld new flange (elliptical neck)
  - Clean for UHV
  - Install NEG strips

Proof of concept exit flange fabricated at BNL

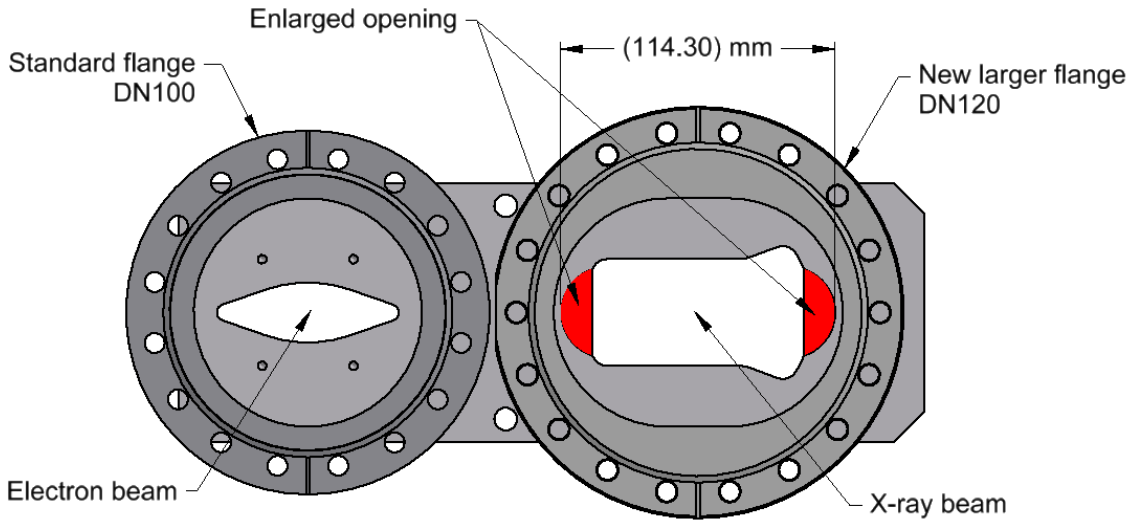

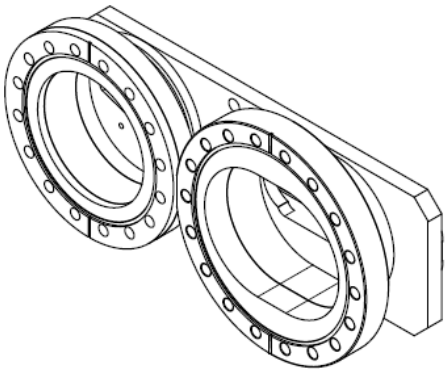

Undulator Absorber (UABS)

- Bellows between dipole chamber and UABS
  - Decouples CABS and UABS for independent positioning
- Long shallow tapers to reduce peak power density
- Additional ports for NEG cartridges due to high PSD gas loading
- Rectangular flange and pipe required for wide user fan (4.35mrad)

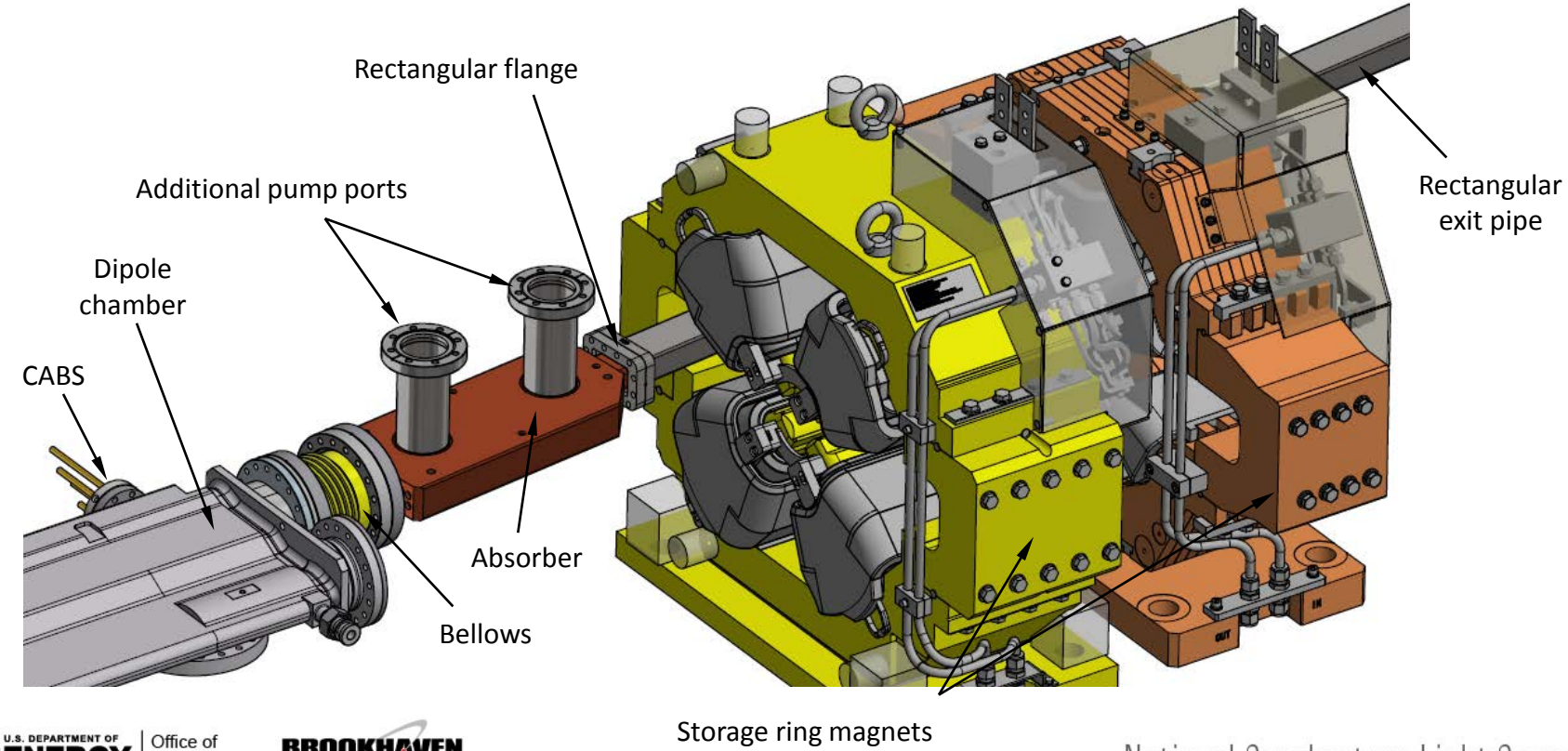

Ray Trace

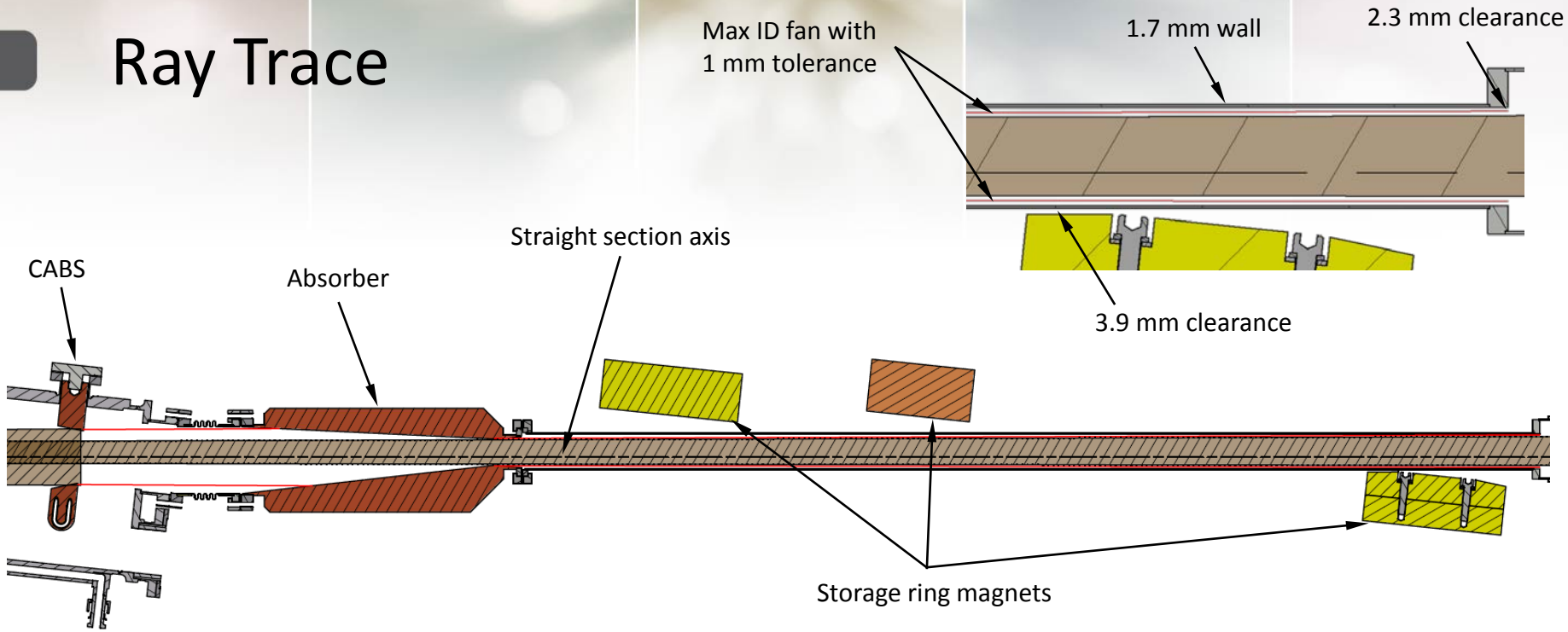
Max ID fan with
1 mm tolerance
1.7 mm wall
2.3 mm clearance
3.9 mm clearance
CABS
Absorber
Straight section axis
Storage ring magnets

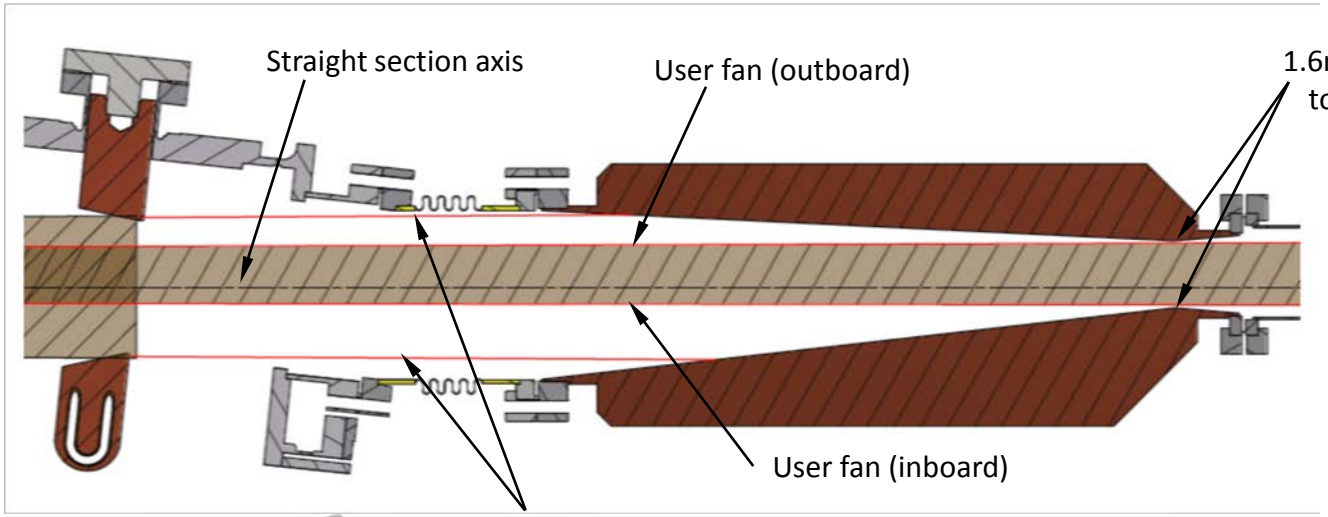
Straight section axis
User fan (outboard)
1.6mm clearance
to user beam
User fan (inboard)
Max ID fan with 1.5mm tolerance

- Magnetic Measurement System

Budker Example (1)

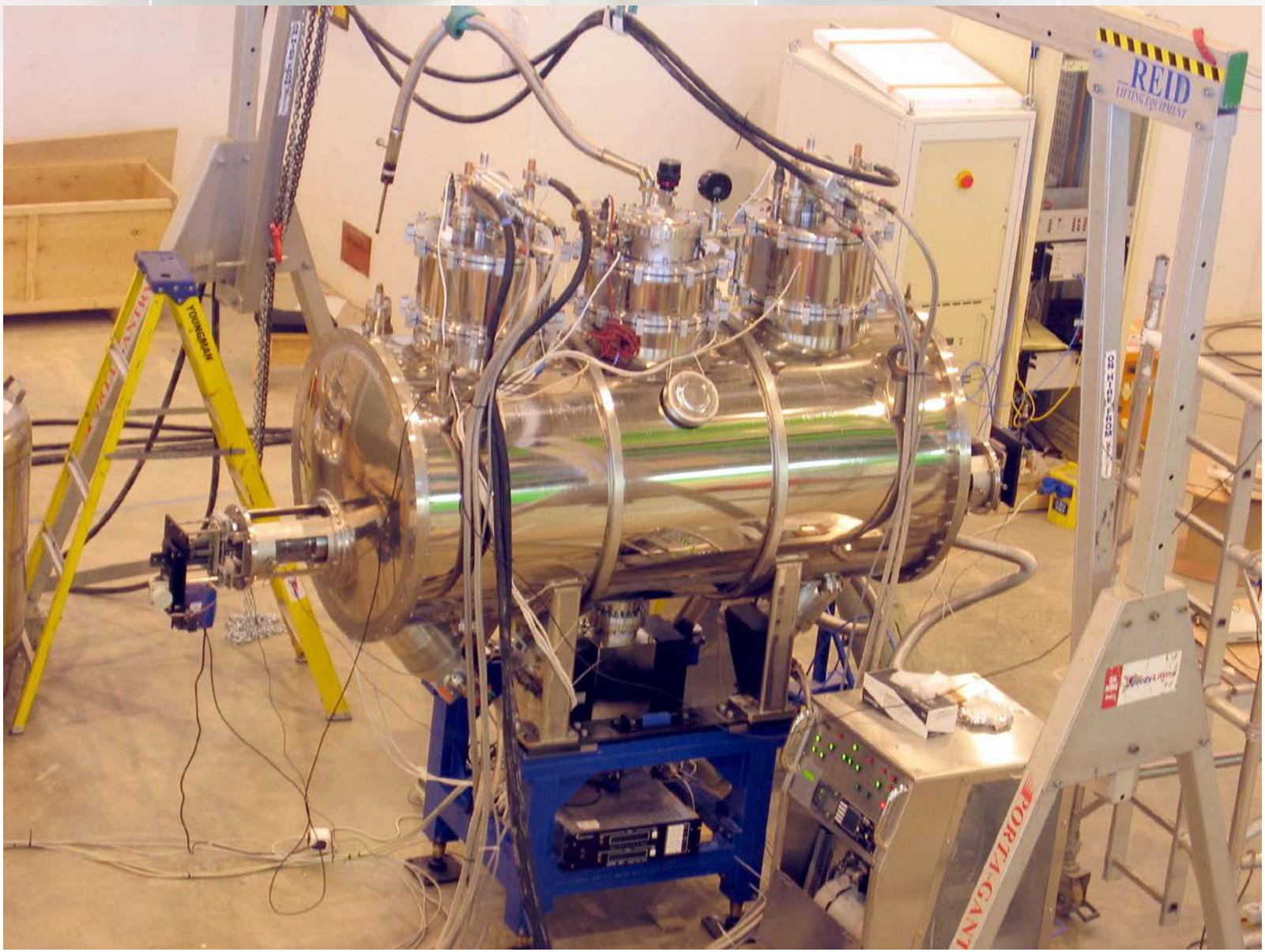

Budker Example (2)

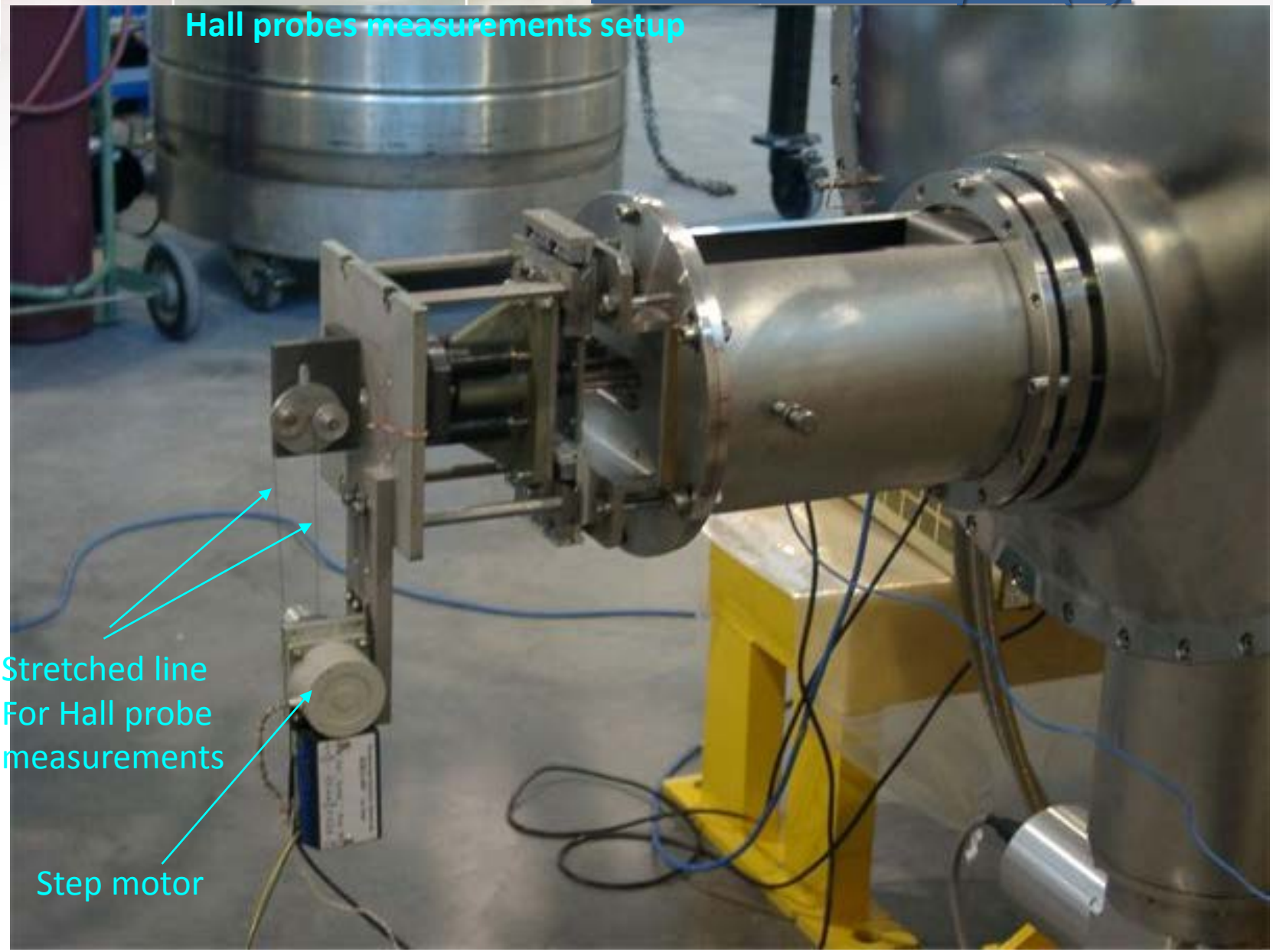

Measurement system @APS

SCU measurement system is based on 'warm guiding tube in a cold bore' - concept developed at Budker Institute.

SCU magnetic field is measured with Hall probes, as well as with the stretched rectangular, delta and 'figure-8' coils.

Magnetic Measurement System at ANKA

Magnet Training:

- Quench detection
- Quench analysis

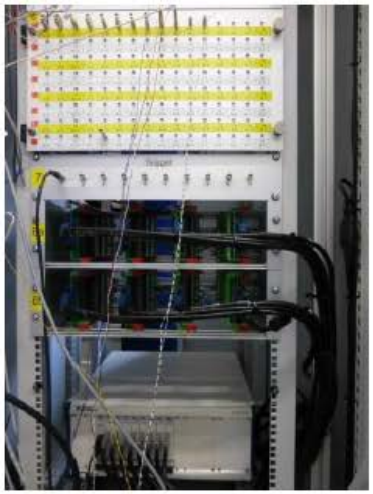

Local field measurement:

- Hall probes

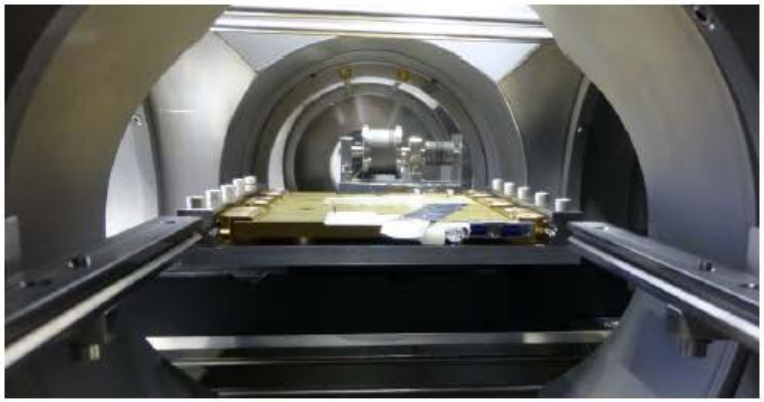

Integral field measurement:

- Stretched wire

- Schedule and Cost

National Synchrotron Light Source II

Activity ID	Activity Name	Original Duration	Activity % Complete	Start	Finish	Budgeted Labor Units	Budgeted Nonlabor Units	Budgeted Total Cost
HEX Partner Beamline Rate Update		947		02-Oct-17 A	16-Jul-21	12528	1876596	$3,623,462
HEX Beamline		947		02-Oct-17 A	16-Jul-21	12528	1876596	$3,623,462
HEX Accelerator Infrastructure		947		02-Oct-17 A	16-Jul-21	12528	1876596	$3,623,462
HEX Source		947		02-Oct-17 A	16-Jul-21	12528	1876596	$3,623,462
HEX15399	Source actuals thru Jan-19	16	100%	02-Oct-17 A	24-Oct-17 A	0	81596	$81,596
HEX15400	HEX SCW - Preliminary designwork and analysis (actuals)	101	100%	01-Nov-17 A	30-Mar-18 A	0	0	$0
HEX17360	HEX SCW - Spec and SOW Development	151	100%	02-Apr-18 A	02-Nov-18 A	0	0	$0
HEX17400	Prepare for Make vs. Buy Decision	21	100%	02-Jul-18 A	31-Jul-18 A	0	0	$0
HEX15650	Obtain cost estimate from SMD (George)	10	100%	02-Jul-18 A	16-Jul-18 A	0	0	$0
HEX17330	Budgetary Cost Estimate From Other Companies (Andy)	10	100%	02-Jul-18 A	16-Jul-18 A	0	0	$0
HEX15430	HEX SCW - Review of Make vs Buy Considerations	15	100%	02-Jul-18 A	23-Jul-18 A	0	0	$0
HEX15660	Make/Buy Decision Report writing and Finalize	21	100%	02-Jul-18 A	31-Jul-18 A	0	0	$0
HEX15640	Budgetary Cost Estimate From Elettra (Timur)	63	100%	02-Jul-18 A	28-Sep-18 A	0	0	$0
HEX15450	HEX SCW - Procurement Documentation	111	100%	24-Jul-18 A	03-Jan-19 A	0	0	$0
HEX15670	Report to Oversight board for approval	1	100%	14-Aug-18 A	14-Aug-18 A	0	0	$0
HEX15680	PPM Accepts and Pins Req	1	100%	03-Dec-18 A	03-Dec-18 A	0	0	$0
HEX17420	Prepare & Submit RFP Remaining Work	19	100%	01-Feb-19 A	28-Feb-19 A	28	0	$3,573
HEX17370	HEX SCW - Modeling and Beam Tracking Remaining Work	85	10%	01-Feb-19 A	03-Jun-19	110	0	$12,890
HEX15700	Receive Proposal	57	0%	01-Mar-19	20-May-19	0	0	$0
HEX17380	HEX SCW - Detailed Lattice Studies & SRP Analysis	72	0%	01-Apr-19*	11-Jul-19	280	0	$33,513
HEX17430	Evaluate Proposals	10	0%	21-May-19	04-Jun-19	120	0	$15,269
HEX15720	Negotiate with Offerors	10	0%	05-Jun-19	18-Jun-19	0	0	$0
HEX15730	Prepare &Approve Contract package	25	0%	19-Jun-19	24-Jul-19	0	0	$0
HEX17390	Magnetic Measurement Development	120	0%	12-Jul-19	06-Jan-20	720	0	$86,764
HEX17440	Contract Award Milestone	0	0%		24-Jul-19	0	0	$0
HEX17450	Control System Development & Procurement	80	0%	25-Jul-19	18-Nov-19	400	0	$50,590
HEX17460	Cryo Infrastructure Development & Procurement	80	0%	25-Jul-19	18-Nov-19	440	0	$53,222
HEX17470	Power Supply Development & Procurement	120	0%	25-Jul-19	17-Jan-20	720	0	$86,573
HEX17480	Quench Detection Development & Procurement	120	0%	25-Jul-19	17-Jan-20	400	0	$47,990
HEX17490	BNL Technical Labor to Support Procurement	400	0%	25-Jul-19	03-Mar-21	1680	0	$213,825
HEX17415	SCW Procurement	400	0%	25-Jul-19	03-Mar-21	0	1500000	$1,678,369
HEX17610	Travel to Vendors	400	0%	25-Jul-19	03-Mar-21	0	60000	$67,135
HEX17620	Consultant	400	0%	25-Jul-19	03-Mar-21	0	35000	$39,162
HEX17590	Controls Procurement	120	0%	19-Nov-19	12-May-20	0	25000	$27,973
HEX17580	Power Supply Procurement	120	0%	21-Jan-20	09-Jul-20	0	75000	$83,918
HEX17600	Quench Detection Procurement	120	0%	21-Jan-20	09-Jul-20	0	50000	$55,946
HEX17630	Control System Assembly & Testing	40	0%	13-May-20	09-Jul-20	420	0	$52,239
HEX17640	Power Supply Assembly & Testing	60	0%	10-Jul-20	02-Oct-20	480	0	$55,364
HEX17650	Quench Detection Assembly & Testing	60	0%	10-Jul-20	02-Oct-20	320	0	$37,341
HEX17500	Inspection, Testing, & Magnetic Measurement	120	0%	04-Sep-20	03-Mar-21	1744	0	$221,386
HEX17510	Bulk Shielding Mods & Supplemental Shielding	60	0%	04-Dec-20	03-Mar-21	428	0	$53,316
HEX17660	Installation Infrastructure	60	0%	04-Dec-20	03-Mar-21	0	50000	$55,946
HEX17670	SCW Arrives at BNL Milestone	0	0%		03-Mar-21	0	0	$0
HEX17520	SCW Installation Prep & Cable Pulling	40	0%	04-Mar-21	28-Apr-21	1000	0	$122,006
HEX17530	Cryo installation	20	0%	29-Apr-21	26-May-21	660	0	$76,887
HEX17540	SCW Installation	20	0%	29-Apr-21	26-May-21	1438	0	$167,598
HEX15620	HEX SCW - Installation Complete	0	0%		26-May-21	0	0	$0
HEX17550	Integrated Testing and Complete Documentation	20	0%	27-May-21	24-Jun-21	720	0	$90,924
HEX17560	IRR Prep	15	0%	25-Jun-21	16-Jul-21	420	0	$52,146

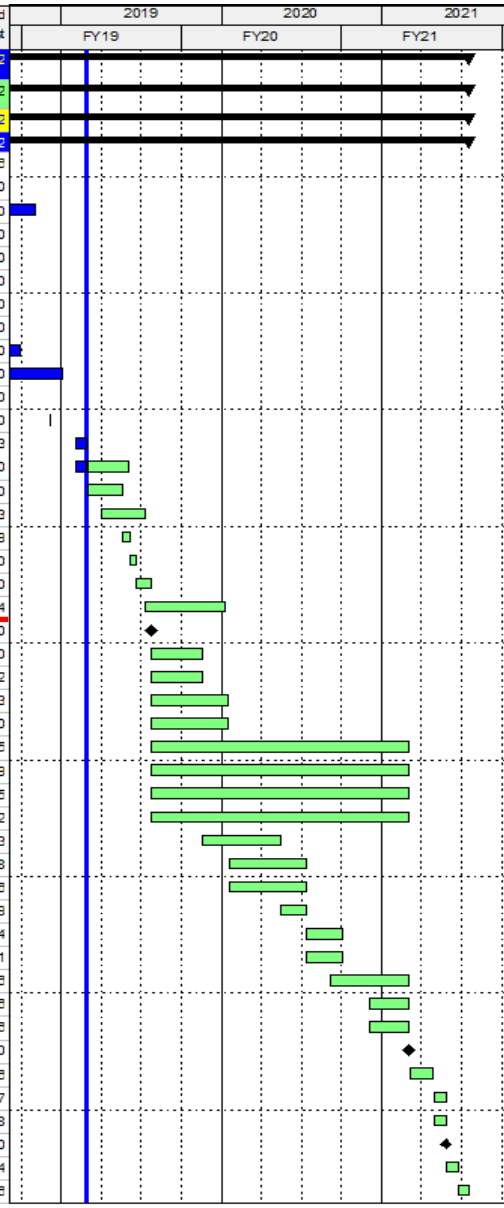

Activity ID	Activity Name	Original Duration	Activity % Complete	Start	Finish	Budgeted Labor Units	Budgeted Nonlabor Units	Budgeted Total Cost
HEX Partner Beamline Rate Update		584		03-Apr-19	30-Jul-21	4130	185000	$701,187
HEX Beamline		584		03-Apr-19	30-Jul-21	4130	185000	$701,187
HEX Accelerator Infrastructure		584		03-Apr-19	30-Jul-21	4130	185000	$701,187
HEX Straight		584		03-Apr-19	30-Jul-21	4130	185000	$701,187
HEX15800	HEX ID Straight - ID Lattice Simulations & Control System Upg	60	0%	03-Apr-19	26-Jun-19	670	0	$85,186
HEX15810	HEX ID Straight - Vacuum Chamber Design	60	0%	01-May-19	25-Jul-19	560	0	$68,146
HEX15820	HEX ID Straight - RF BPM Design & Procurement	120	0%	01-May-19	21-Oct-19	450	0	$54,518
HEX15830	HEX ID Straight - Vacuum Chamber Procurement & Testing	200	0%	26-Jul-19	13-May-20	530	0	$63,794
HEX15840	HEX ID Straight - Procurement Receipt of RF BPMs, Supports,	20	0%	22-Oct-19	19-Nov-19	0	85000	$95,108
HEX15850	HEX ID Straight - Procurement Receipt of Vacuum Chambers &	20	0%	14-May-20	11-Jun-20	0	100000	$111,891
HEX15860	HEX ID Straight - Vacuum Chamber Installation & Bake	30	0%	27-May-21	09-Jul-21	1220	0	$140,110
HEX15870	HEX ID Straight - RF BPM Testing & Install	40	0%	27-May-21	23-Jul-21	700	0	$82,435
HEX15880	HEX ID Straight - Installation & Testing Complete	0	0%		23-Jul-21	0	0	$0
HEX15890	HEX ID Straight - IRR Prep	5	0%	26-Jul-21	30-Jul-21	0	0	$0

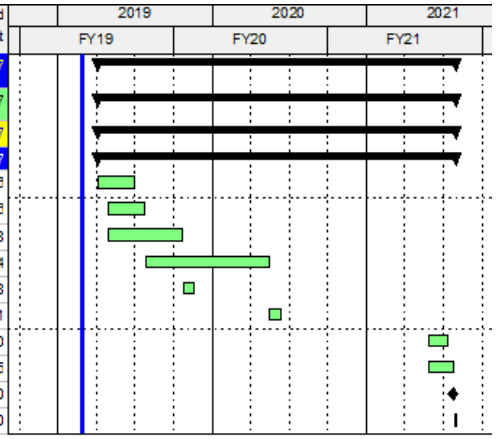

WBS	WBS Name	Resource Type	Budgeted Cost
7.05.05.02	**HEX Source**	Labor	$1,533,421
		Nonlabor	$2,090,045
Grand Total			**$3,623,466**

WBS	WBS Name	Resource Type	Budgeted Cost
7.05.05.03	**HEX Straight**	Labor	$494,190
		Nonlabor	$206,999
Grand Total			**$701,189**

Summary

- Spec and SOW for the HEX-SCW have been finalized and a RFP was issued in February 2019. The dead line for the submission of proposal is April 26th.
- Components for the straight section have been designed and some have been fabricated.
- Interested vendors have no experience of SCW production nor measurement.
- Maximum attention should be paid to maintenance cost of the device as other institutes spend considerable amount to maintain their SCWs.