# Final Design Review - HEX Front End

Sushil Sharma
and
Chris Amundsen, M. Breitfeller, Frank DePaola, John Tuozzolo

# Acknowledgment

A. Broadbent, O. Chubar, G. Fries, R. Gambella,

F. Lincoln, M. Lucas, S. O'Hara, Z. Zhong

# Outline

- Changes after a previous “Final Design Review” in September 2018.
- Introduction – RSI and FE layout
- HHL (High-Heat-Load) components
  - Mask, Slits and Photon Shutter
- Other Components
  - Safety Shutters
  - Lead Collimators
- Summary & Conclusions

# Changes from the Previous FDR

- Ray tracings were modified to be consistent with our procedures and tolerances.
- A slit stage design was selected following verification of its load carrying capacity.
- On the flange downstream of the fixed mask the surface angle for beam intercept was changed from $1.875^{o}$ to $2.5^{o}$ .

# Introduction - HEX RSI

Table from NSLS-II-27ID-RSI-001

| | |
|---|---|
| Beamline | HEX |
| Type | SCW |
| Device envelope length | ~1.8 m |
| Magnetic Length | 1.2m nominal<br>(29 main and 4 partial poles) |
| Canted | No |
| Period: nominal | 70 mm |
| Nominal (minimum) gap of vacuum bore tube * | 10 mm TBC |
| Peak field nominal | 4.3 T |
| Keff: nominal | 28.1*1 |
| Energy Range: | 8 keV –200 keV |
| Power total: nominal | 55.7 kW*1 |
| Max.power per unit solid angle: nominal | 28.4 kW/mr$^2$ *1 |
| Straight | Low beta |
| Device center*2 | May be offset in the straight to the downstream end. |
| Fan angle *3 (mrad H) : nominal (maximum) | 9.87 (10.15) |
| Fan angle *3 (mrad V) : nominal (maximum) | 0.88 (1.47) |
| Magnetic field variation range | Current adjustment 0 – 100% |

Beams: Fans and Separations

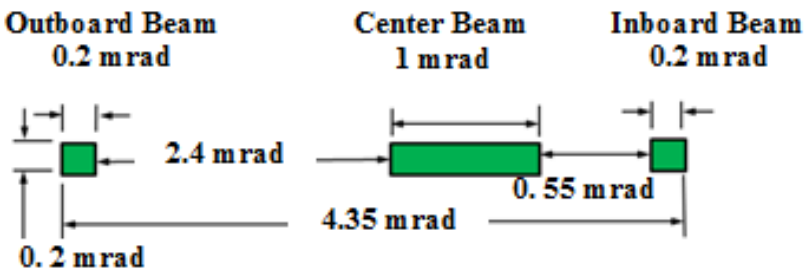


Source Specifications

# HEX SCW Power Distribution

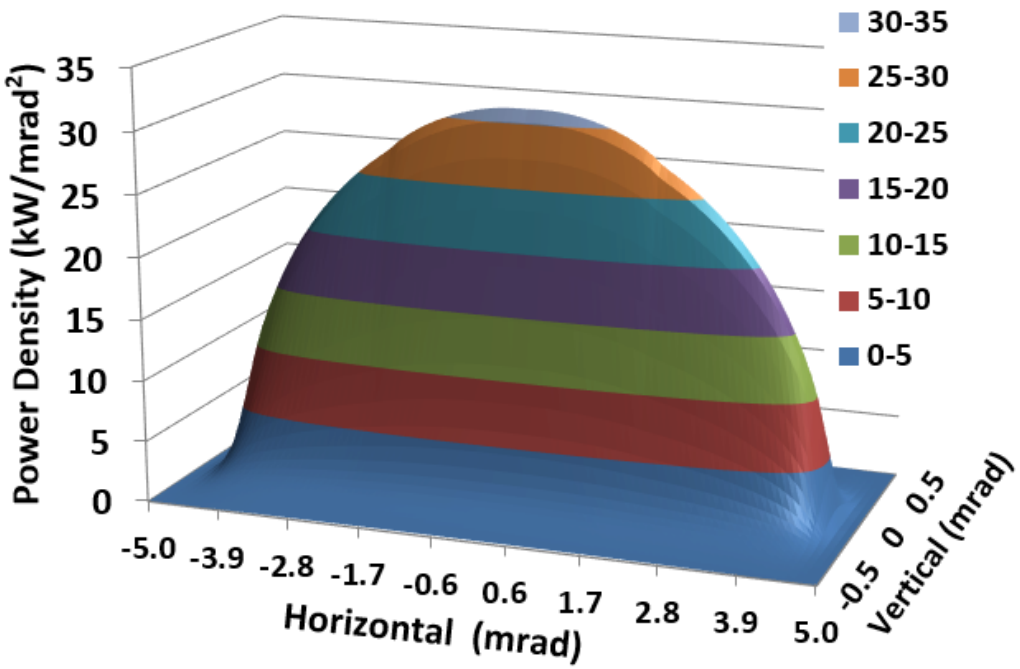


- Max. Power Density: 28.4 kW/mr²
- Total Power: 55.7 kW

*Courtesy: O. Chubar*

# HEX Front End Components

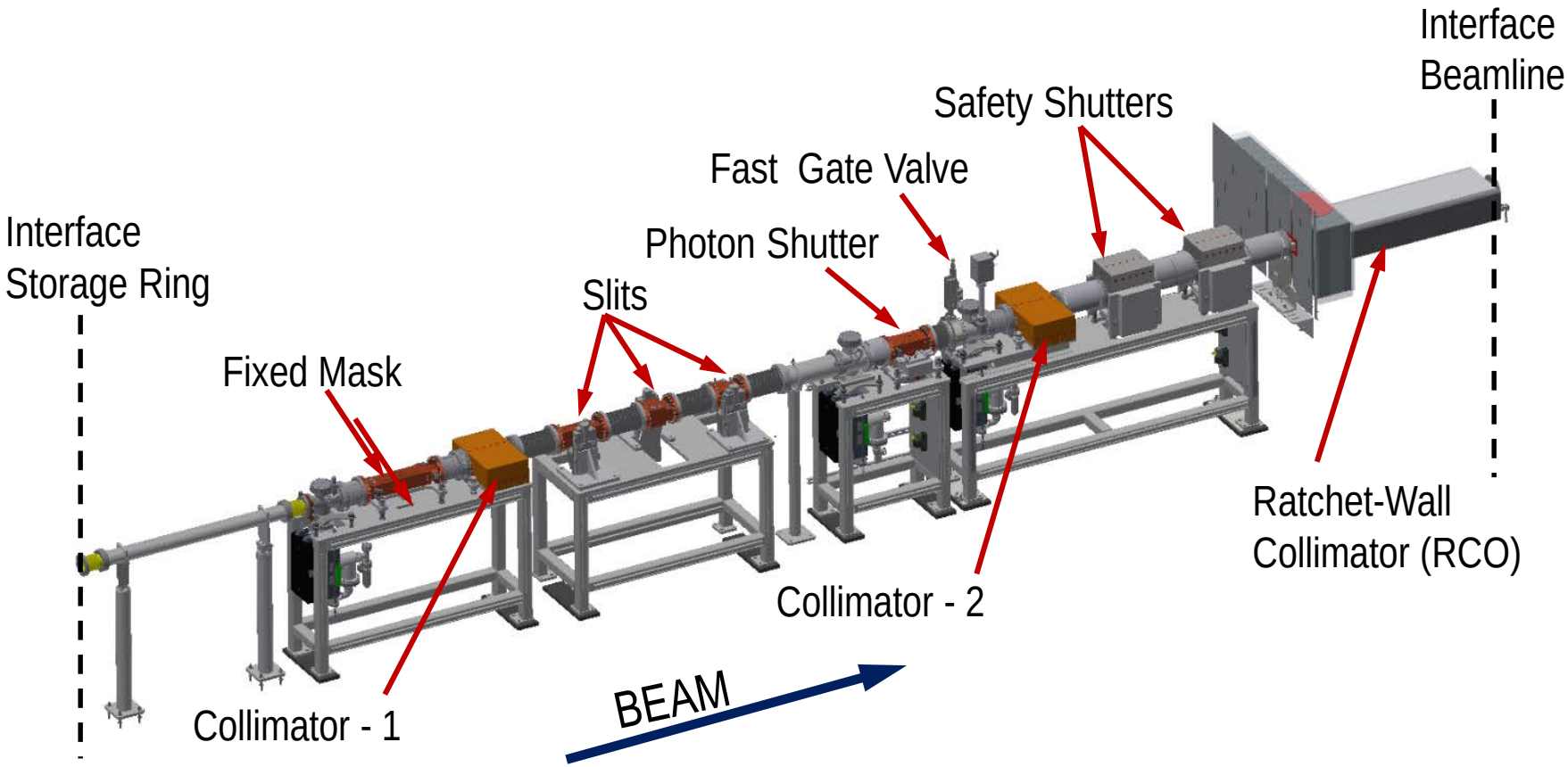

# HEX Fixed Mask

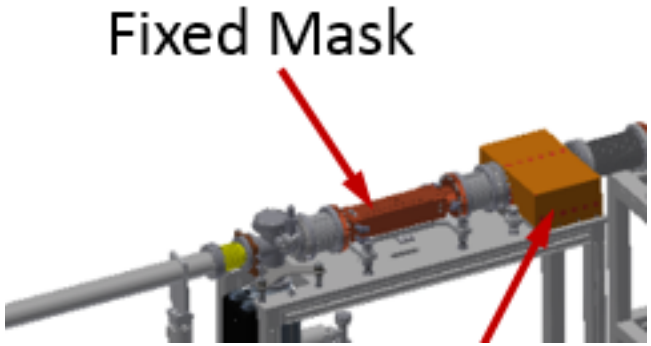


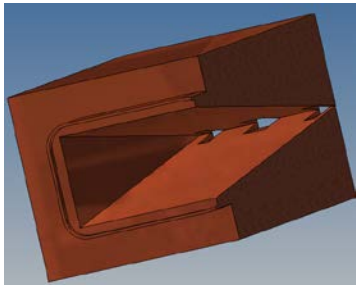

HEX Mask Model

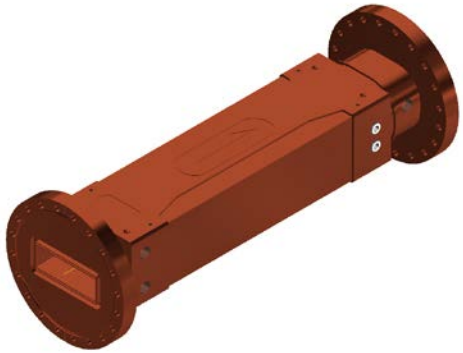

- The fixed mask splits the main X-ray beam into three users' beams.
- The new design concept (beam is intercepted only by top and bottom water-cooled surfaces) allows 3 closely-spaced apertures.
- X-rays escaping through the wire gap is intercepted by a downstream water-cooled flange.
- A mask of this design is installed in the SST front end.

# HEX Fixed Mask – FE Thermal Analysis (1)

Nominal Beam Interception – Apertures are not modeled to simplify modeling and obtain conservative results.

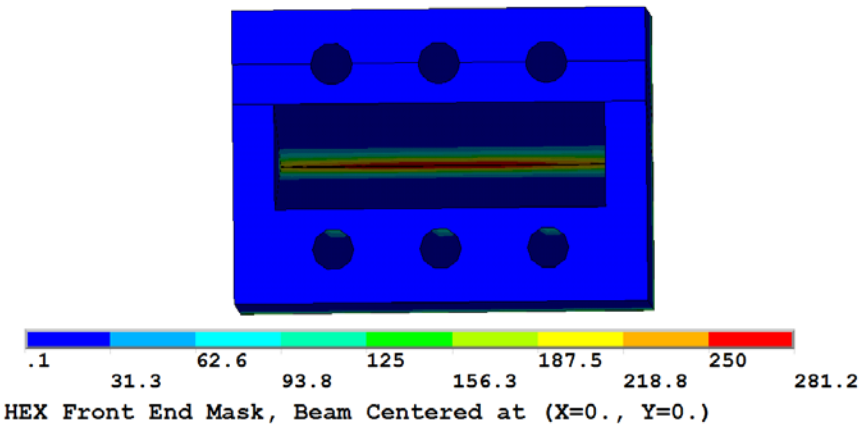


Upstream View

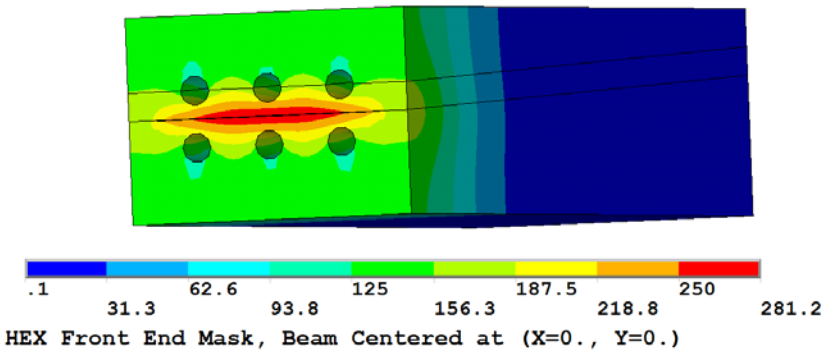


Downstream View

- The maximum temperature rise is 281 °C.
- Acceptable temperature rise 300 °C for a fatigue life of at least 30,000 cycles. This applies to HEX slits and photon shutter also.

# HEX Slits

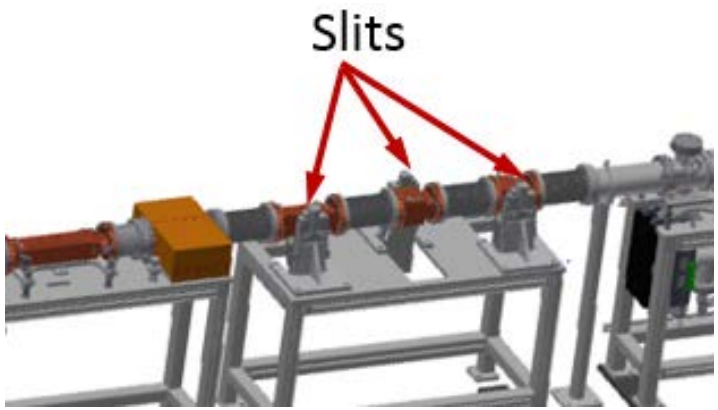


- Each slit intercepts only one of the three beams allowing other beams to pass through.
- The slits move only vertically.
- The slit body is made from CuCrZr and is welded to 8-inch CuCrZr flanges.
- Cooling channels and apertures are optimized via inclined surfaces.

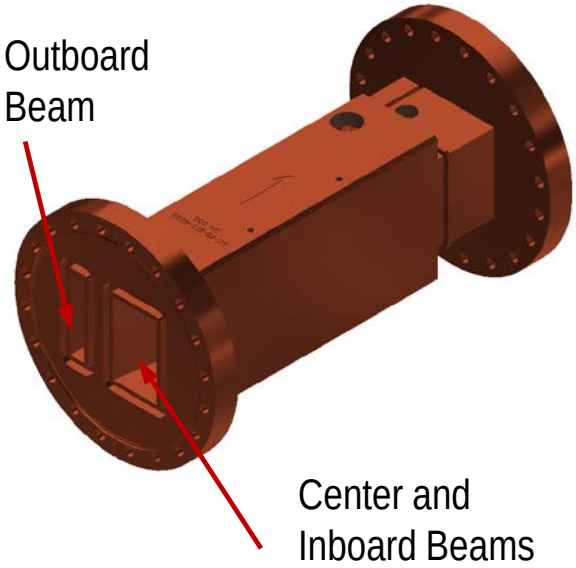


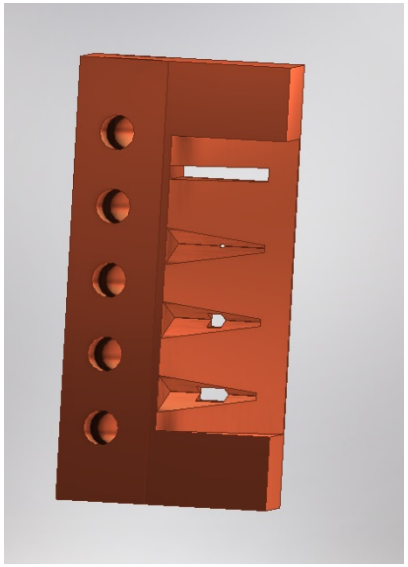

Center Beam Apertures

# HEX Slit – FE Thermal Analysis

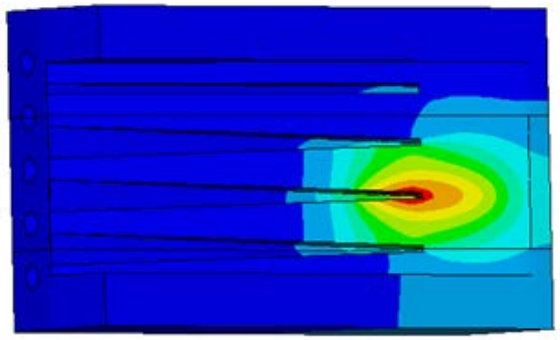

99.5 ºC

1. Nominal Interception – Beam passing through a slit

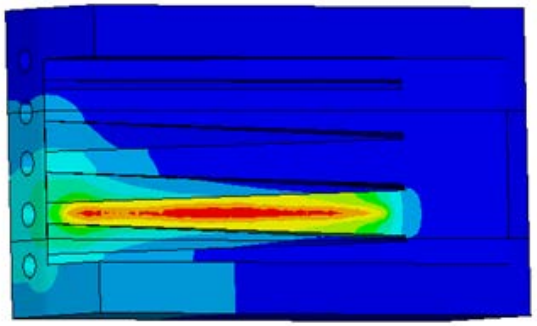

250.6 ºC

2. Slit as a beam stop

- The maximum temperature rise when the slit is used as a beam stop is 250.6 ºC.

# Slit Stage

VERTICALLY MOUNTED, 25mm DIA BALL SCREW, BRAKE, LINEAR ENCODER, RADIATION PREP

## Resultant Loads on Stage calculated

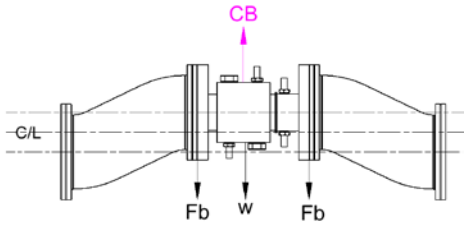


| | lbf |
|---|---|
| Total Max. Vertical Load (L) | 219.2 |
| 406XR Carriage weight | 5.0 |
| Bracket weight | 20.0 |
| Slit body weight | 80.0 |
| Counter Balance of Slit body weight | -80.0 |
| Bellows 1 force (deflected 60mm) | 97.1 |
| Bellows 2 force (deflected 60mm) | 97.1 |

L = 219.2 lbf = 974.3 N

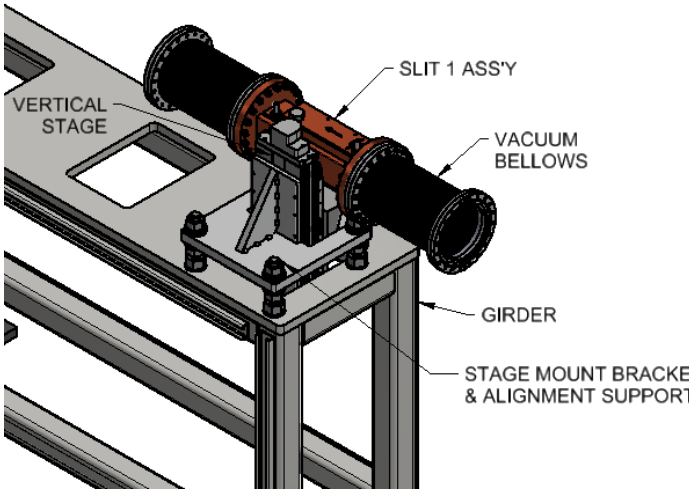


## Front View

Stage is offset cradling load – ideal to minimize vibration

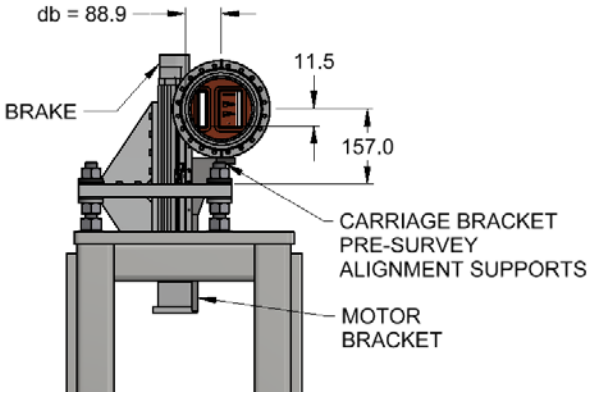


**Vertical Translation**

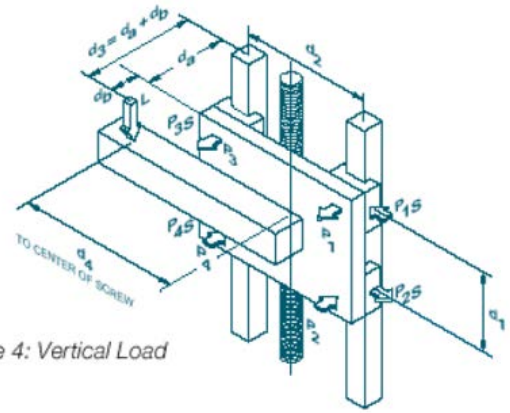


*Figure 4: Vertical Load*

# HEX Photon Shutter

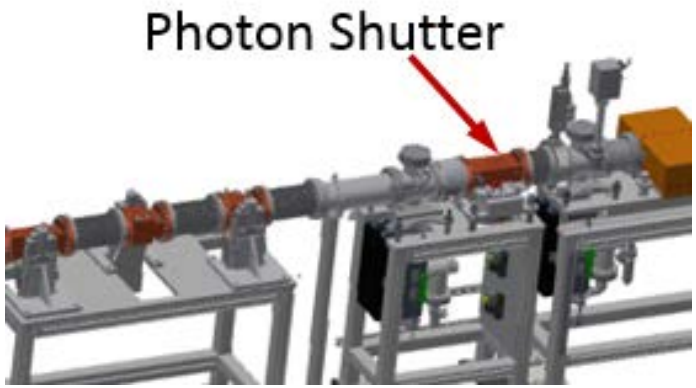


The photon shutter is used to completely stop the X-ray beams allowing access inside beamline hutches.

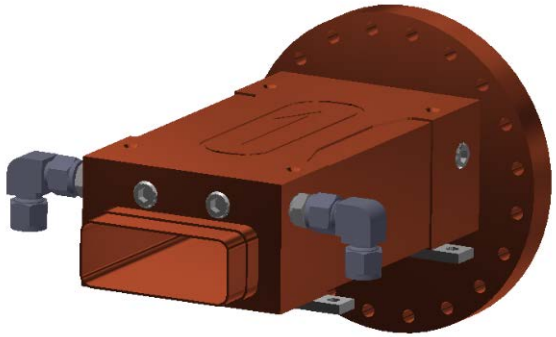

Photon Shutter (3 Beams)

Nominal Source Distance = 19.2 m

Nominal Intercepted Power = 7.72 kW

Aperture = 101.6 mm x 38.1 mm

Angle of the top surface = 2.5º

Channel Diameter = 12.7 mm

Length = 254 mm

# HEX Photon Shutter – FE Model

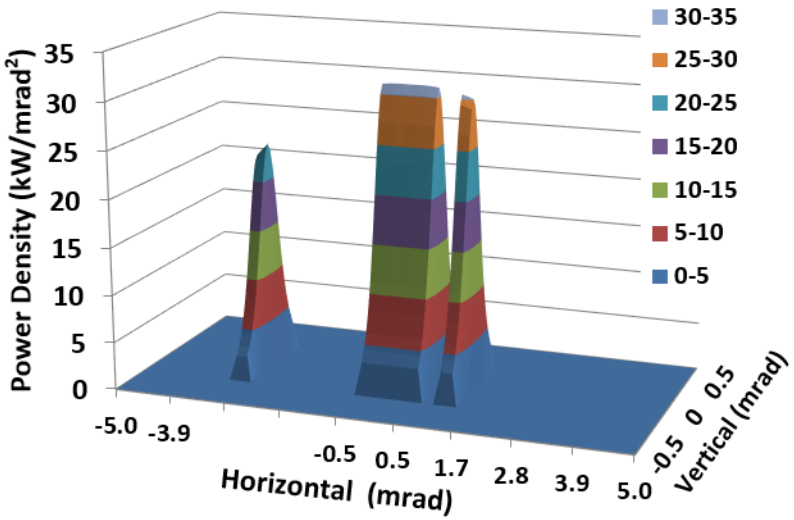


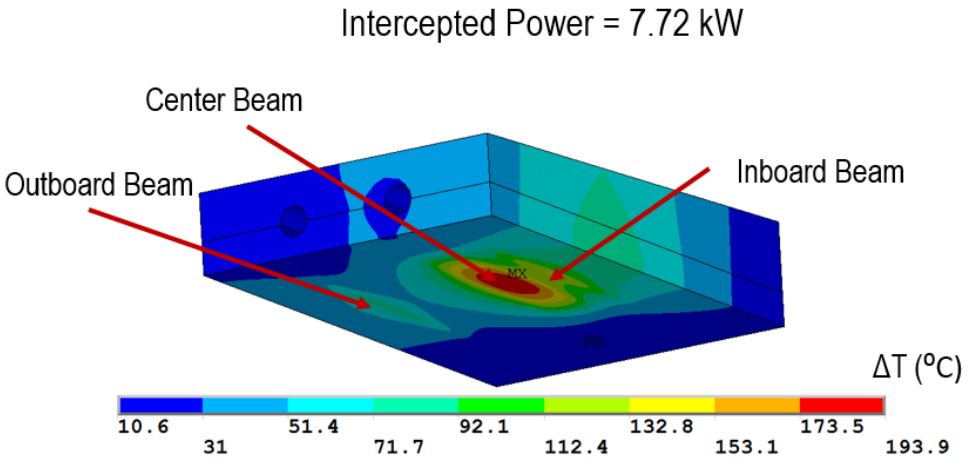


A maximum temperature rise of 194°C is calculated

# HEX Lead Collimators 1 and 2

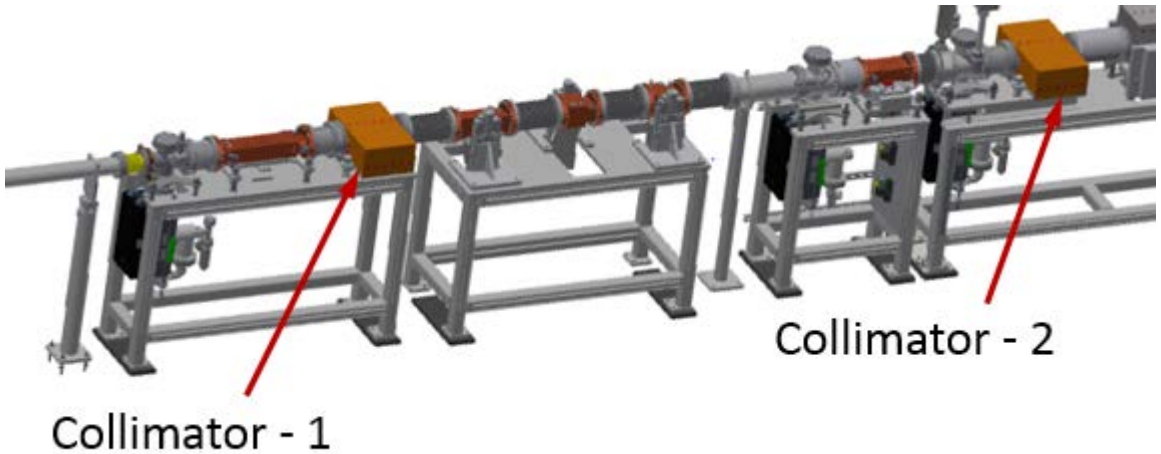


Lead collimators are used to trim the fan of high energy Bremsstrahlung radiation fan.

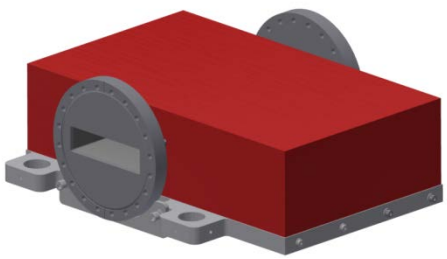

Lead Cover Off

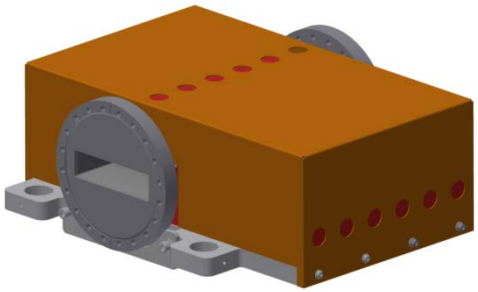

With Lead Cover

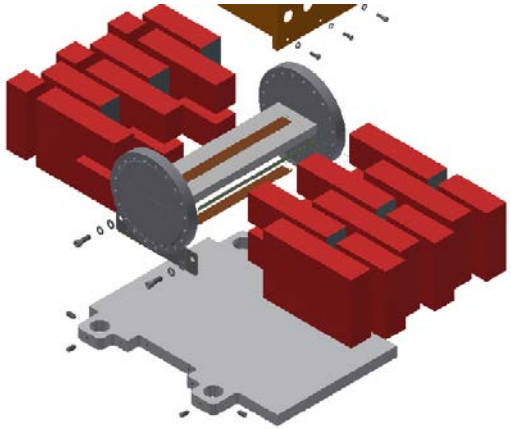

Lead Stacking Details

# HEX Safety Shutters

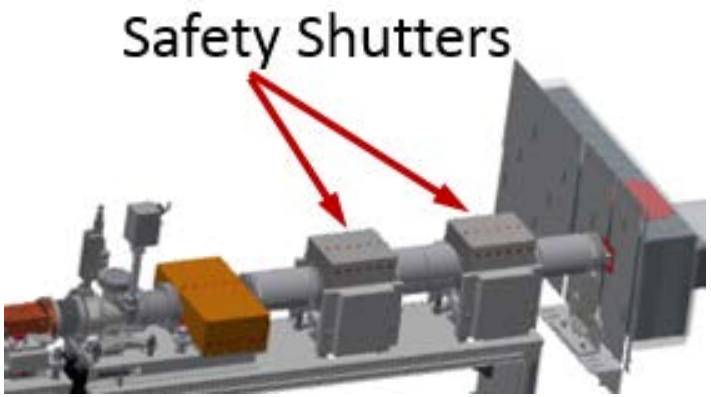


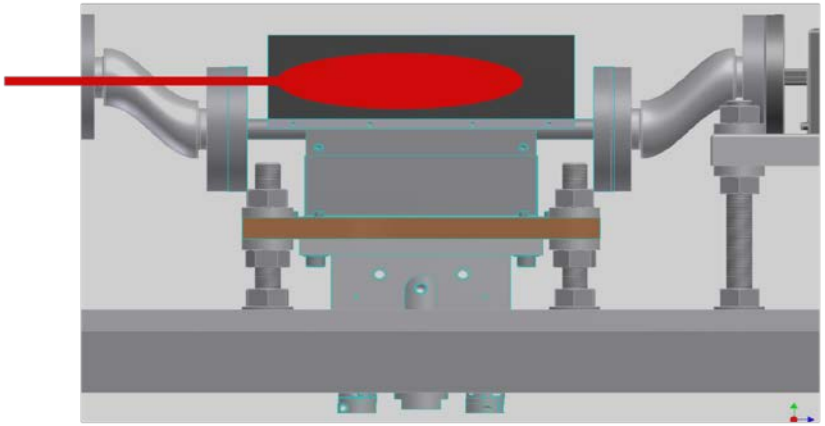

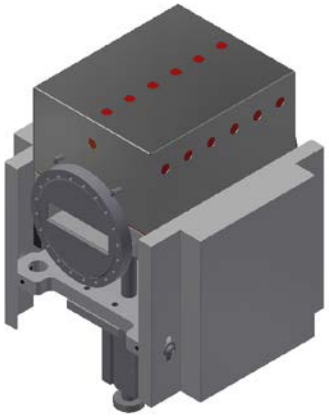

Safety Shutter Assembly

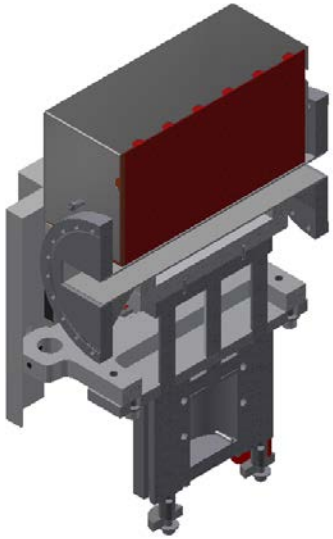

Section View

The safety shutters are actuated by air thrusters that lower the lead blocks into the beam path. This stops high energy Bremsstrahlung radiation from entering the beamline hutch

# RCO

## Ratchet Wall Collimator – Design, Assembly and Installation

- The RCO Shielding materials restrict primary and secondary Bremsstrahlung radiation exiting the ratchet wall penetration.
- The RCO aperture size is based on PPS fan size.
- The Burn Thru Mask upstream of RCO provides full passive protection to the RCO lead.

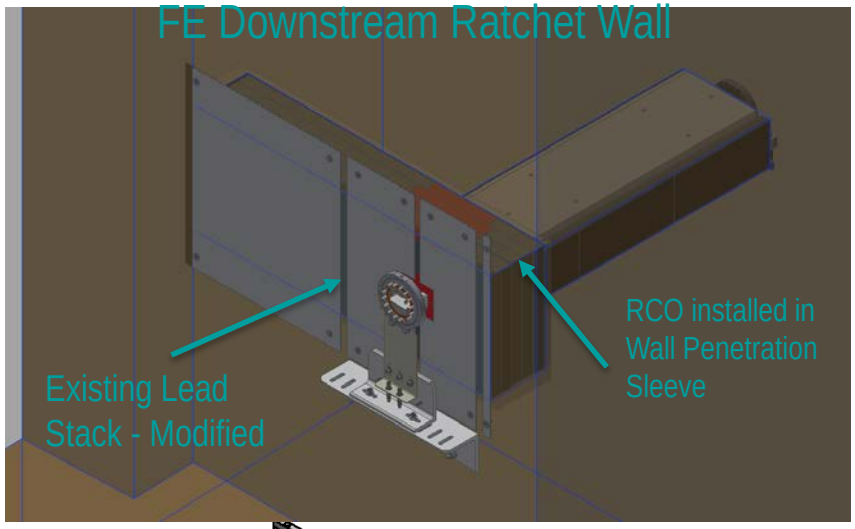


Large 8” CF Flanges & RCO Tube

- Flats machined on CF, to clear wall sleeve

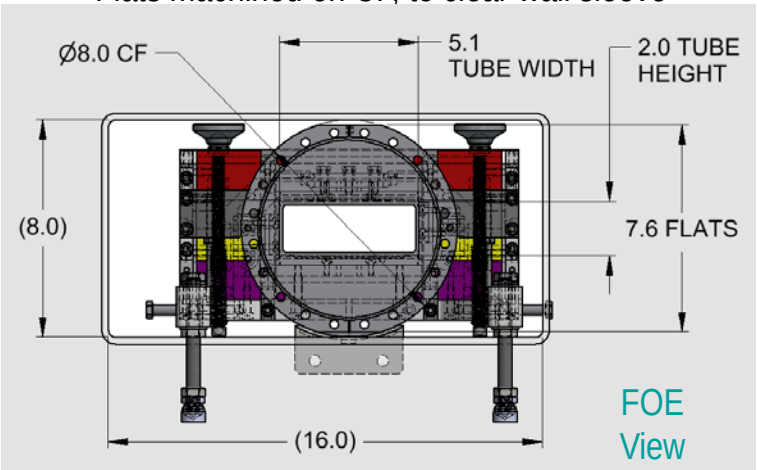


Lead and Concrete on Chassis

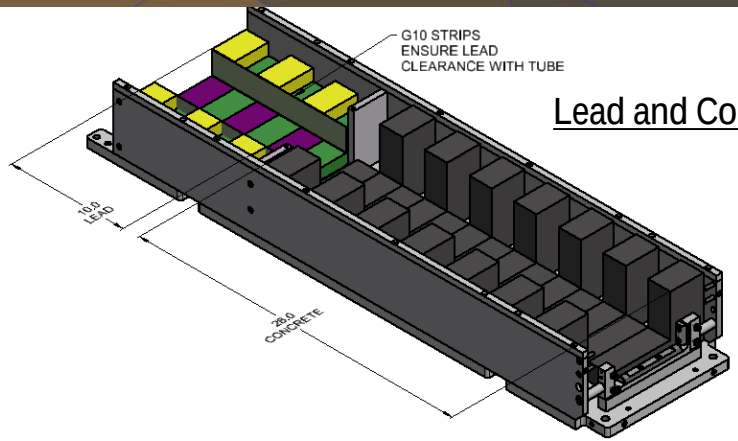


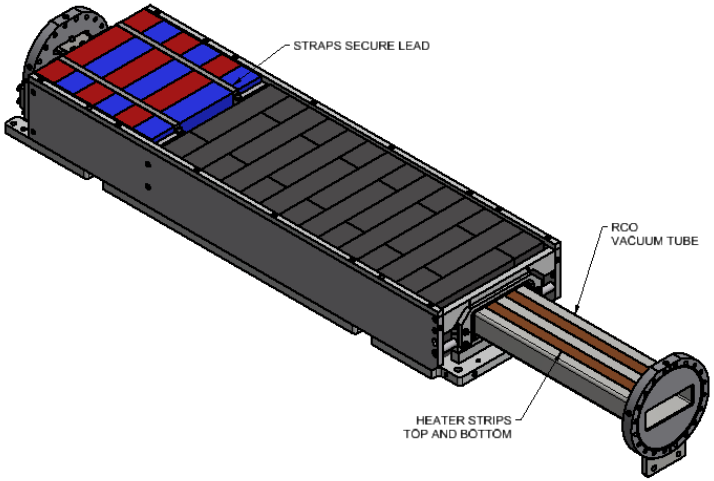


- Material is overlapped, to eliminate line of sight
- G10 strip insulates Vacuum Tube, lead pushed tight to G10.
- Vacuum Tube installed and pre-surveyed to chassis

# RCO

## Ratchet Wall Collimator – Design, Assembly and Installation

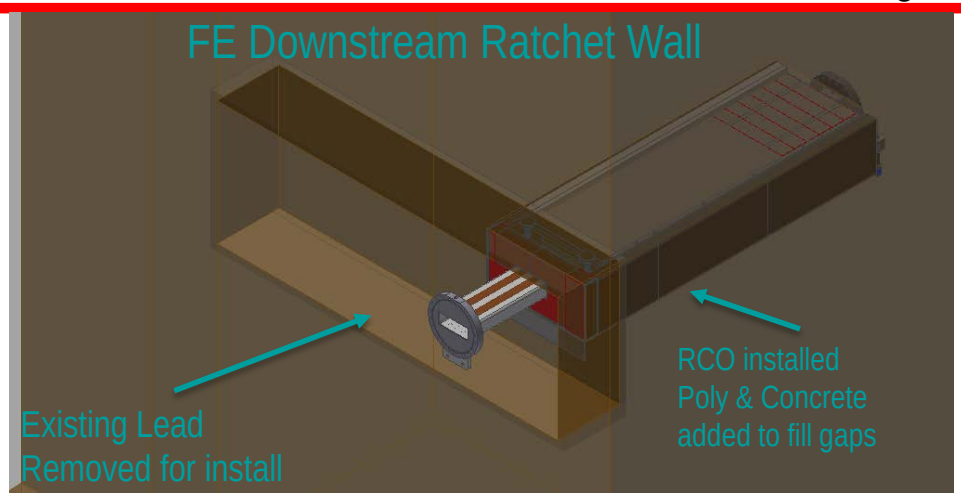


- Poly sheet is installed under RCO chassis.
- RCO is transported on cart.
- RCO Ass'y pushed into Wall Sleeve, with cart leadscrew.
- The RCO is surveyed and fastened in position.
- Poly & Concrete material is installed on sides & above – eliminates open gaps in penetration.
- 2" thick lead is installed - upstream

**Torcon Lead Modification and Re-installation**

Overlap design around large 5.1"W x 2.0"H tube

All seams covered – No line of sight

Ratchet Port

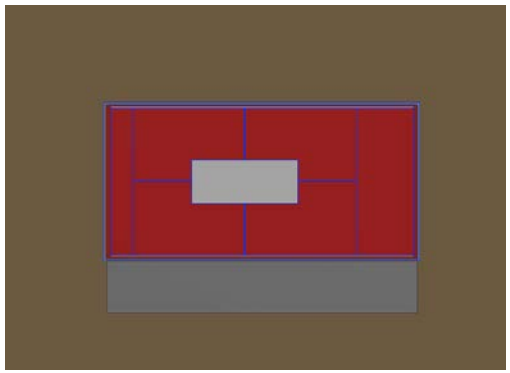

Layer 1 & Layer 4

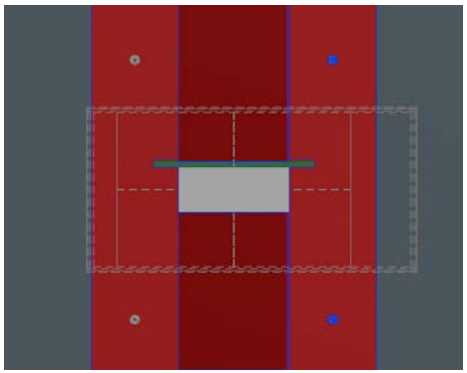

Layer 2 & Layer 5

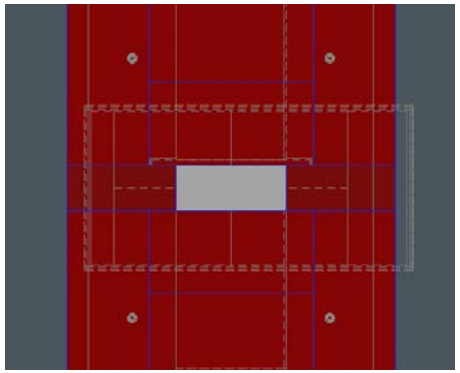

Layer 3

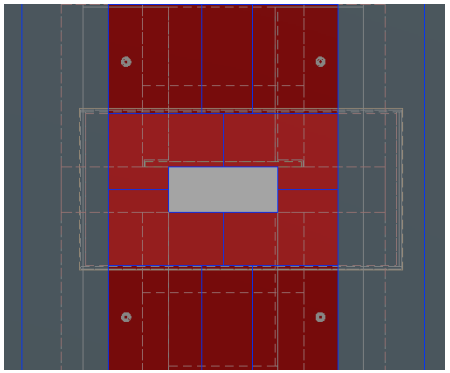

# Schedule and Cost

| Activity ID | Activity Name | Original Duration | Activity % Complete | Start | Finish | Budgeted Labor Units | Budgeted Nonlabor Units | Budgeted Total Cost |
|---|---|---|---|---|---|---|---|---|
| **HEX Partner Beamline Rate Update** | | 764 | | 01-Nov-17 A | 20-Nov-20 | 9191 | 1368333 | $2,560,146 |
| **HEX Beamline** | | 764 | | 01-Nov-17 A | 20-Nov-20 | 9191 | 1368333 | $2,560,146 |
| **HEX Accelerator Infrastructure** | | 764 | | 01-Nov-17 A | 20-Nov-20 | 9191 | 1368333 | $2,560,146 |
| **HEX Front End** | | 764 | | 01-Nov-17 A | 20-Nov-20 | 9191 | 1368333 | $2,560,146 |
| HEX15010 | HEX FE - Layout & Basic Component Design | 249 | 100% | 01-Nov-17 A | 30-Oct-18 A | 0 | 0 | $0 |
| HEX15259 | HEX FE - Actuals thru Jan-19 | 310 | 100% | 01-Nov-17 A | 31-Jan-19 A | 0 | 353333 | $353,333 |
| HEX15020 | HEX FE - Ray Tracing & Radiation Analysis | 245 | 99% | 02-Apr-18 A | 25-Mar-19 | 0 | 0 | $0 |
| HEX15030 | HEX FE - Detail Components & Final Design | 235 | 96% | 16-Apr-18 A | 25-Mar-19 | 54 | 0 | $6,281 |
| HEX15040 | HEX FE - Slit and stage design, prototyping and test | 268 | 60% | 07-May-18 A | 31-May-19 | 360 | 0 | $41,515 |
| HEX15050 | HEX FE - Dipole chamber & vacuum design | 174 | 30% | 19-Sep-18 A | 31-May-19 | 280 | 0 | $34,167 |
| HEX15260 | HEX FE - Formal Design Review (Models) | 1 | 100% | 25-Sep-18 A | 25-Sep-18 A | 0 | 0 | $0 |
| HEX15090 | HEX FE - Procurement of Basic Components | 134 | 7% | 29-Oct-18 A | 13-May-19 | 429 | 0 | $54,200 |
| HEX15110 | HEX FE - Receipt of Front End Components | 100 | 3% | 02-Jan-19 A | 23-May-19 | 0 | 665000 | $744,077 |
| HEX15150 | HEX FE - Build Component Subassemblies | 80 | 0% | 29-Mar-19 | 22-Jul-19 | 960 | 0 | $103,308 |
| HEX15130 | HEX FE - Build Ratchet Wall Collimator | 40 | 0% | 24-May-19 | 22-Jul-19 | 380 | 0 | $42,207 |
| HEX15060 | HEX FE - Formal Design Review (Final) | 2 | 0% | 03-Jun-19 | 04-Jun-19 | 0 | 0 | $0 |
| HEX15280 | Procurmenet and Receipt of Dipole Chamber (TBC) | 5 | 0% | 03-Jun-19 | 07-Jun-19 | 0 | 0 | $0 |
| HEX15070 | HEX FE - Electrical & Controls Design | 60 | 0% | 03-Jun-19 | 26-Aug-19 | 340 | 0 | $41,941 |
| HEX15080 | Front End Delay Due to Funding Profile | 20 | 0% | 05-Jun-19 | 02-Jul-19 | 0 | 0 | $0 |
| HEX15100 | HEX FE - Procurement of Beamline Specific Components | 80 | 0% | 03-Jul-19 | 25-Oct-19 | 860 | 0 | $106,976 |
| HEX15170 | HEX FE - Build Stand Assemblies | 60 | 0% | 23-Jul-19 | 16-Oct-19 | 1100 | 0 | $125,325 |
| HEX15120 | HEX FE - Receipt of Slit Assemblies | 80 | 0% | 01-Aug-19 | 25-Nov-19 | 0 | 350000 | $391,619 |
| HEX15140 | HEX FE - Installation Prep & Cabling Pulling | 120 | 0% | 27-Aug-19 | 21-Feb-20 | 792 | 0 | $92,339 |
| HEX15160 | HEX FE - Replacement of dipole chamber | 20 | 0% | 09-Dec-19 | 07-Jan-20 | 444 | 0 | $48,673 |
| HEX15270 | Shutdown winter 19 | 25 | 0% | 09-Dec-19* | 14-Jan-20 | 0 | 0 | $0 |
| HEX15180 | HEX FE - Stand Assembly Installation | 60 | 0% | 24-Feb-20 | 15-May-20 | 532 | 0 | $63,376 |
| HEX17320 | Shutdown Spring 20 | 25 | 0% | 04-May-20* | 08-Jun-20 | 0 | 0 | $0 |
| HEX15190 | HEX FE - Connections, Terminations & Electronics Installation | 40 | 0% | 18-May-20 | 14-Jul-20 | 940 | 0 | $108,339 |
| HEX15200 | HEX FE - RWC & Safety Shutter Installation and Tie - In to SR | 10 | 0% | 15-Jul-20 | 28-Jul-20 | 530 | 0 | $60,266 |
| HEX15210 | HEX FE - Bakeout & Final Survey | 10 | 0% | 29-Jul-20 | 11-Aug-20 | 310 | 0 | $34,327 |
| HEX15220 | HEX FE - Survey of Safety Critical Components | 5 | 0% | 12-Aug-20 | 18-Aug-20 | 0 | 0 | $0 |
| HEX15230 | HEX FE - Integrated Testing and Complete Documentation | 60 | 0% | 19-Aug-20 | 13-Nov-20 | 880 | 0 | $107,877 |
| HEX15240 | HEX FE - Integrated Testing Complete | 0 | 0% | | 13-Nov-20 | 0 | 0 | $0 |
| HEX15250 | HEX FE - IRR Prep | 5 | 0% | 16-Nov-20 | 20-Nov-20 | 0 | 0 | $0 |

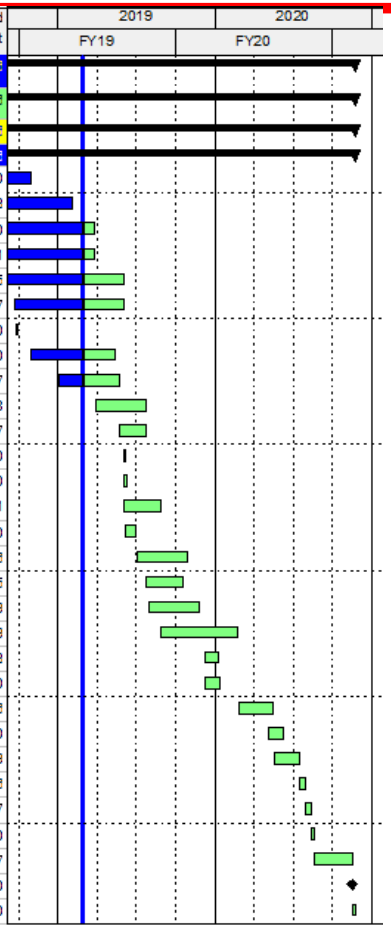


| WBS | WBS Name | Resource Type | Budgeted Units | Budgeted Cost |
|---|---|---|---|---|
| **7.05.05.01** | **HEX Front End** | Labor | 9,191 | $1,071,102 |
| | | Nonlabor | 1,368,333 | $1,489,029 |
| **Grand Total** | | | **1,377,524** | **$2,560,131** |

# Summary & Conclusions

- HEX FE detailed designs are complete. Design review held on 25th Sept 2018, completing the NYSERDA contract Milestone #4.
- FE analyses confirm thermal designs of the HHL components.
- The designs meet all RSI specifications and fatigue life requirements.
- Except for the slits the models are based on proven designs.
- A prototype slit assembly is under fabrication for testing.