NSLS II7-ID SST Beam Line Personal Protection System Certification Validation Check List
G. Ganetis 1/31/19

**Beam Line** __7-ID_SST_____

The following check list represents the documents and tasks that summarize the review the evaluator has done for a NSLS II Beam Line Personal Protection System:

| **Document or Task** | **Documents Reviewed** | **Checked** | **Comments** |
|---|---|---|---|
| Beam Line Logic Diagram | LT-EL-BL-EI-PPS-1070-96_REV-B.pdf | | |
| Front End Logic Diagram | LT-EL-BL-EI-PPS-0101-92_REV-G.pdf | | No Change |
| Beam Line Logic Diagram reviewed by PS Radiation Safety Committee ( Sub Committee) | logic_7id_28id_2018_final.pdf | | No Change |
| Electrical Schematics<br>Auxiliary Enclosure<br>First Optical Enclosure<br>Water Flow Trip Amplifiers<br>Front End –Network/ System<br><br>Front End-SR 7 I/O Box | <br>LT-EL-BL-EI-PPS-1070-90_REV-B.pdf<br>LT-EL-BL-EI-PPS-1070-91_REV-B.pdf<br>LT-EL-BL-EI-PPS-1070-92_REV-A.pdf<br>LT-EL-BL-EI-PPS-0101-90 _REV-B.pdf<br>LT-EL-BL-EI-PPS-0101-91_REV-B.pdf<br>LT-EL-SR-EI-PPS-0207-90 _REV-E.pdf | | <br>-<br>-<br>-<br>(A Chain) No Change<br>(B Chain) No Change<br>- No Change |
| Certification Test Procedure<br>.<br>ID 7 PPS Rad Interlock Cert Check List | Beamline Radiological Interlock Test NSLSII-NSLSII-ESH-PRC-001.pdf<br>NSLS-II Beamline 7-ID Radiological Interlock Test 1.17.2019 (Full).pdf | | Procedure -No Change<br>Check List |
| Beam Line Tour & Secure Demonstration | Not Used for IRRs | | |
| Mechanical Inspection reports for Beam line Hutch Doors | Door Report 7_ID.pdf | | No Change |
| Design Description for Beam Lines and Front End PPS | PS-C-XFD-SPC-PPS-001 | | (Copies available upon request) |
| Maintenance Procedures | PS-C-XFD-PRC-023 | | (Copies available upon request) |
| Network Isolation Test Procedure | PS-C-XFD-PRC-022 | | (Copies available upon request) |

| | | | |
|---|---|---|---|
| PPS Equipment Layout Drawing | LT-EL-BL-EI-HCH-1070-REV-B.pdf | | |
| ECNs required after Certification using Small Change Procedure before IRR | | | |
| NSLS-II Simple PPS PLC Programming Changes | | | |
| Configuration Control<br>7-ID Chain A PPS Front End P5 Program Stored<br>7-ID Chain B PPS Front End P5 Program Stored<br>7-ID Chain A PPS Beamline Program Stored<br>7-ID Chain B PPS Beamline Program Stored | <br>LT-EL-BL-EI-PPS-0101-72_REV-G.pdf<br><br>LT-EL-BL-EI-PPS-0101-82_REV-G.pdf<br><br>LT-EL-BL-EI-PPS-1070-70_REV-D.pdf<br><br>LT-EL-BL-EI-PPS-1070-71_REV-C.pdf | | -<br>No Change<br>-<br>No Change<br>-<br>-<br>-<br>-<br>- |

Notes
No Change = There have been no changes to this document from the time the beamline had its IRR. Copies of this document is available upon request.

| REV | DESCRIPTION | DATE | BY | CHECKED | APP |
|---|---|---|---|---|---|
| A | INITIAL RELEASE | 01/24/2018 | SEJ | JM | SB |
| B | REVISED PER ECN LT-ECN-019-2054 | 11/06/2018 | SEJ | JM | SB |

# 7-ID FOE SEARCH LOGIC

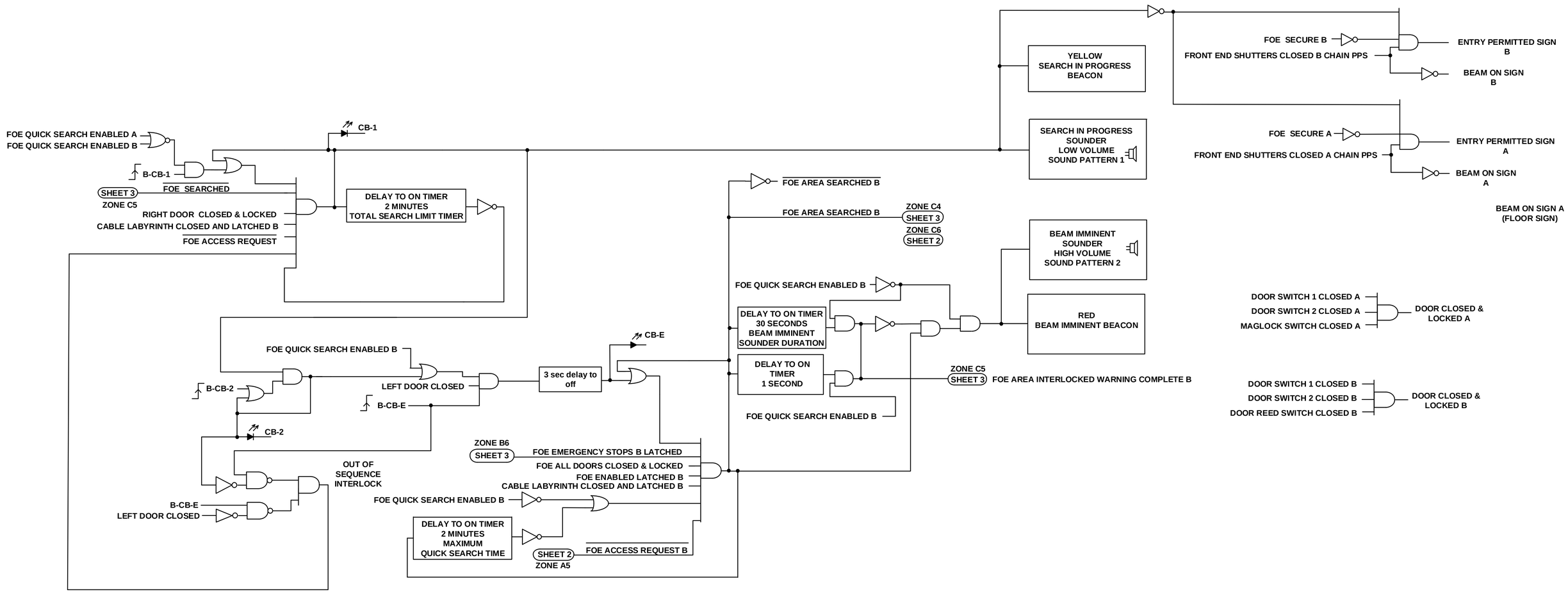


LT-EL-BL-EI-PPS-1070-96

| | |
|---|---|
| JOB NUMBER | USED ON DWG. NO. |

BROOKHAVEN NATIONAL LABORATORY

BROOKHAVEN NATIONAL LABORATORY
BROOKHAVEN SCIENCE ASSOCIATES
UPTON, NEW YORK 11973
*Exploring Life's Mysteries, Protecting its Future*

NSLS II NATIONAL SYNCHROTRON LIGHT SOURCE II

UNLESS OTHERWISE SPECIFIED
INTEGER TOLERANCES ± .06
DECIMAL TOLERANCES
.X ± .030
.XX ± .015
.XXX ± .010
ANGULAR TOLERANCE ± 0.5°
UNSPECIFIED RADII .02 MAX
125 FINISH — BREAK SHARP CORNERS AND EDGES MAX .03 MIN .005

UNLESS OTHERWISE SPECIFIED DIMENSIONS ARE IN INCHES DIMENSIONS IN [ ] ARE MILLIMETERS EQUIV. FOR REF. ONLY

INTERPRET DRAWING AS PER ANSI Y14.5 OR Y32.2

ESH&Q RISK LEVEL A-1

OUTSTANDING ECN'S

| | | DATE |
|---|---|---|
| DRWN BY | S. JARZABKOWSKI | 1/24/2018 |
| CHK BY | J.MALLEY | 1/26/2018 |
| ENG APP | S. BUDA | 1/25/2018 |
| SUPV APP | G. GANETIS | 1/26/2018 |
| QA APP | E.CHESWICK | 1/25/2018 |
| ESH APP | R. LEE | 1/25/2018 |

WIRING DIAGRAM,
7-ID PPS FOE SEARCH LOGIC

DRAWING DIRECTORY: LT-EL-BL-EI
DRAWING NUMBER: LT-EL-BL-EI-PPS-1070-96
REV: B

COMPUTER REPRODUCABLE

SCALE: N/A

SHEET 1 OF 19

| REV | DESCRIPTION | DATE | BY | CHECKED | APP |
|---|---|---|---|---|---|
| | SEE SHEET 1 | | | | |

# 7-ID FOE A CHAIN LOGIC

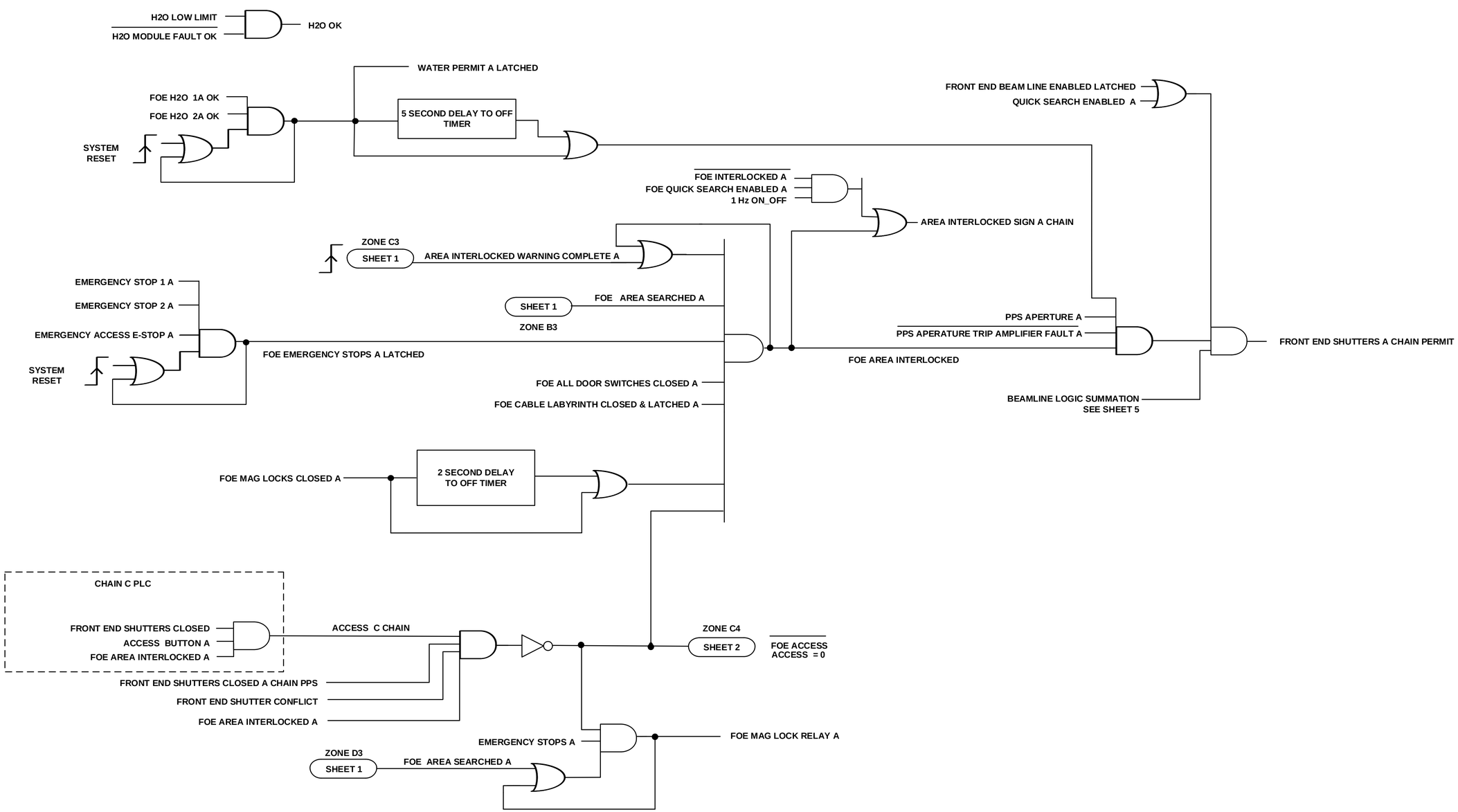


A

| LT-EL-BL-EI (DRAWING DIRECTORY) | LT-EL-BL-EI-PPS-1070-96 (DRAWING NUMBER) | B (REV) |
|---|---|---|
| COMPUTER REPRODUCABLE | SCALE: N/A | SHEET 2 OF 19 |

LT-EL-BL-EI-PPS-1070-96

| REV | DESCRIPTION | DATE | BY | CHECKED | APP |
|---|---|---|---|---|---|
| | SEE SHEET 1 | | | | |

# 7-ID FOE B CHAIN LOGIC

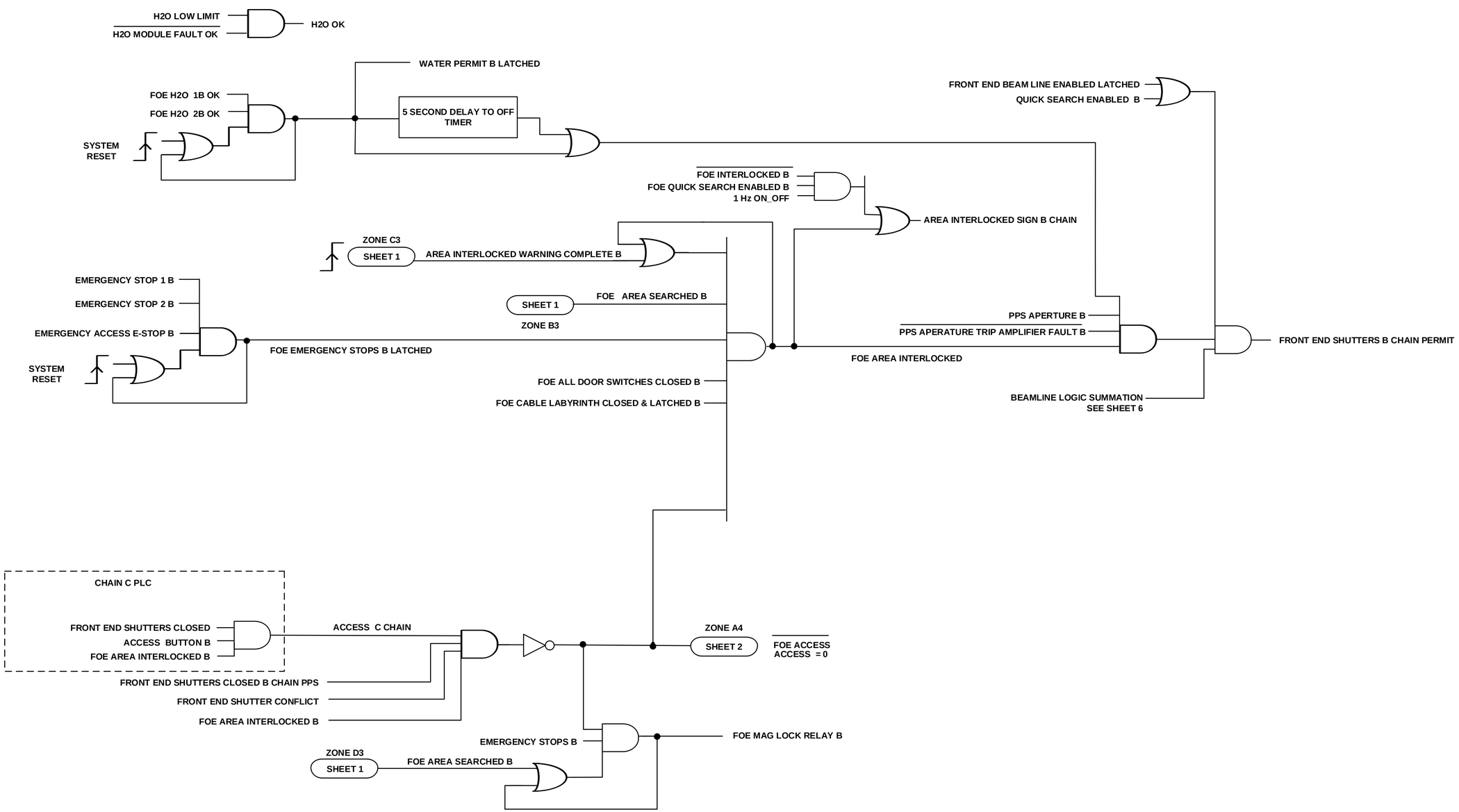


**B**

| LT-EL-BL-EI (DRAWING DIRECTORY) | LT-EL-BL-EI-PPS-1070-96 (DRAWING NUMBER) | B (REV) |
|---|---|---|
| COMPUTER REPRODUCABLE | SCALE: N/A | SHEET 3 OF 19 |

LT-EL-BL-EI-PPS-1070-96

| REV | DESCRIPTION | DATE | BY | CHECKED | APP |
|---|---|---|---|---|---|
| | SEE SHEET 1 | | | | |

# 7-ID FOE BEAMLINE PPS COMPONENT LAYOUT

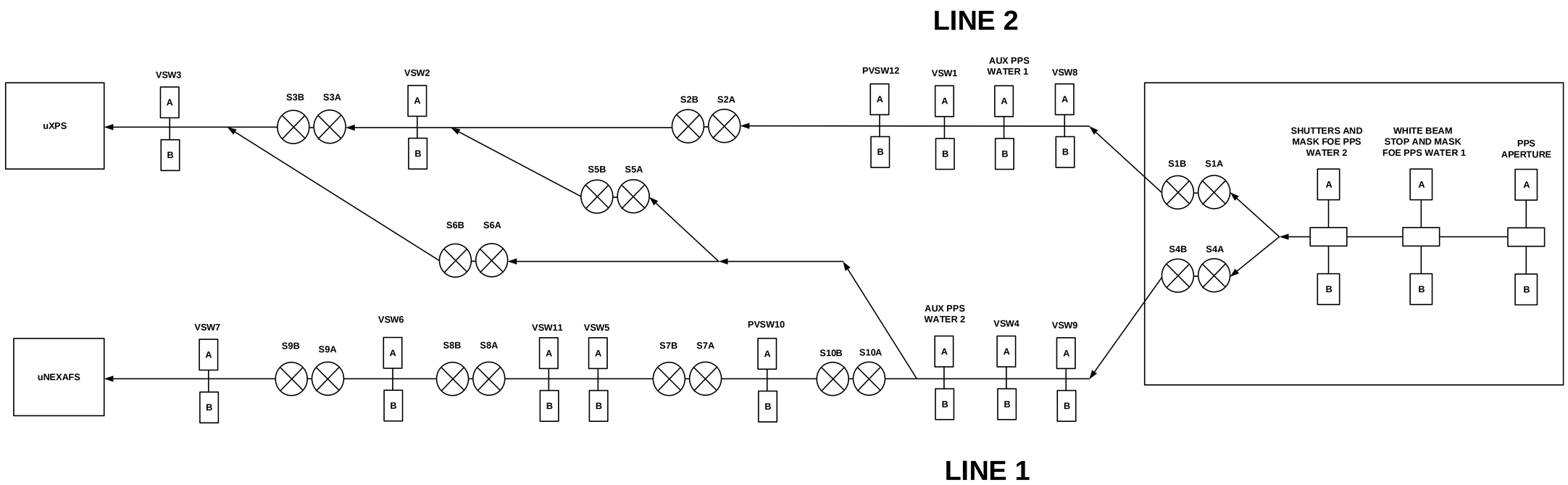


| LT-EL-BL-EI (DRAWING DIRECTORY) | LT-EL-BL-EI-PPS-1070-96 (DRAWING NUMBER) | B (REV) |
|---|---|---|
| COMPUTER REPRODUCABLE | SCALE: N/A | SHEET 4 OF 19 |

LT-EL-BL-EI-PPS-1070-96

| REV | DESCRIPTION | DATE | BY | CHECKED | APP |
|---|---|---|---|---|---|
| | SEE SHEET 1 | | | | |

# 7-ID FOE A CHAIN LOGIC
# (FRONT END SHUTTER PERMIT)

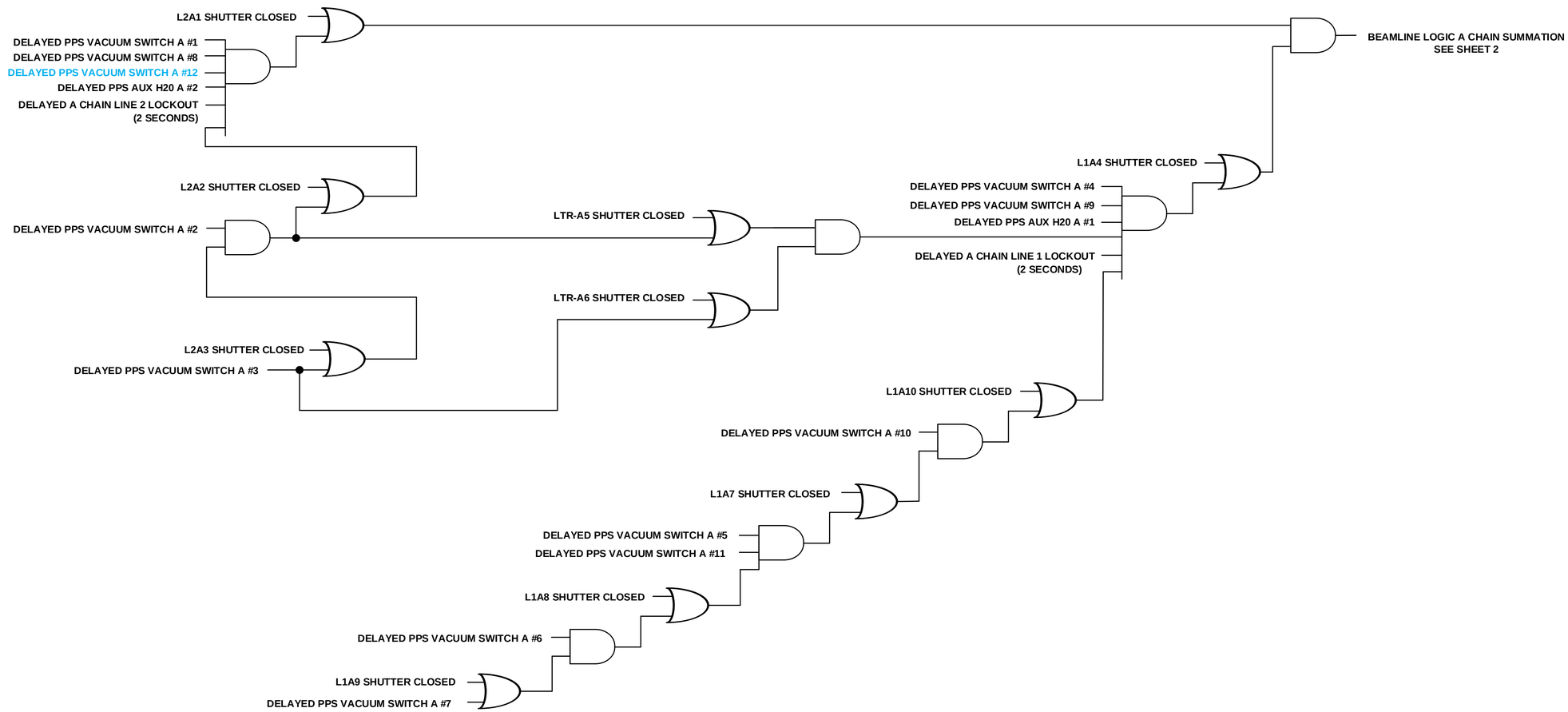


FUTURE COMPONENTS

A

| LT-EL-BL-EI (DRAWING DIRECTORY) | LT-EL-BL-EI-PPS-1070-96 (DRAWING NUMBER) | B (REV) |
|---|---|---|
| COMPUTER REPRODUCABLE | SCALE: N/A | SHEET 5 OF 19 |

LT-EL-BL-EI-PPS-1070-96

| REV | DESCRIPTION | DATE | BY | CHECKED | APP |
|---|---|---|---|---|---|
| | SEE SHEET 1 | | | | |

# 7-ID FOE B CHAIN LOGIC
# (FRONT END SHUTTER PERMIT)

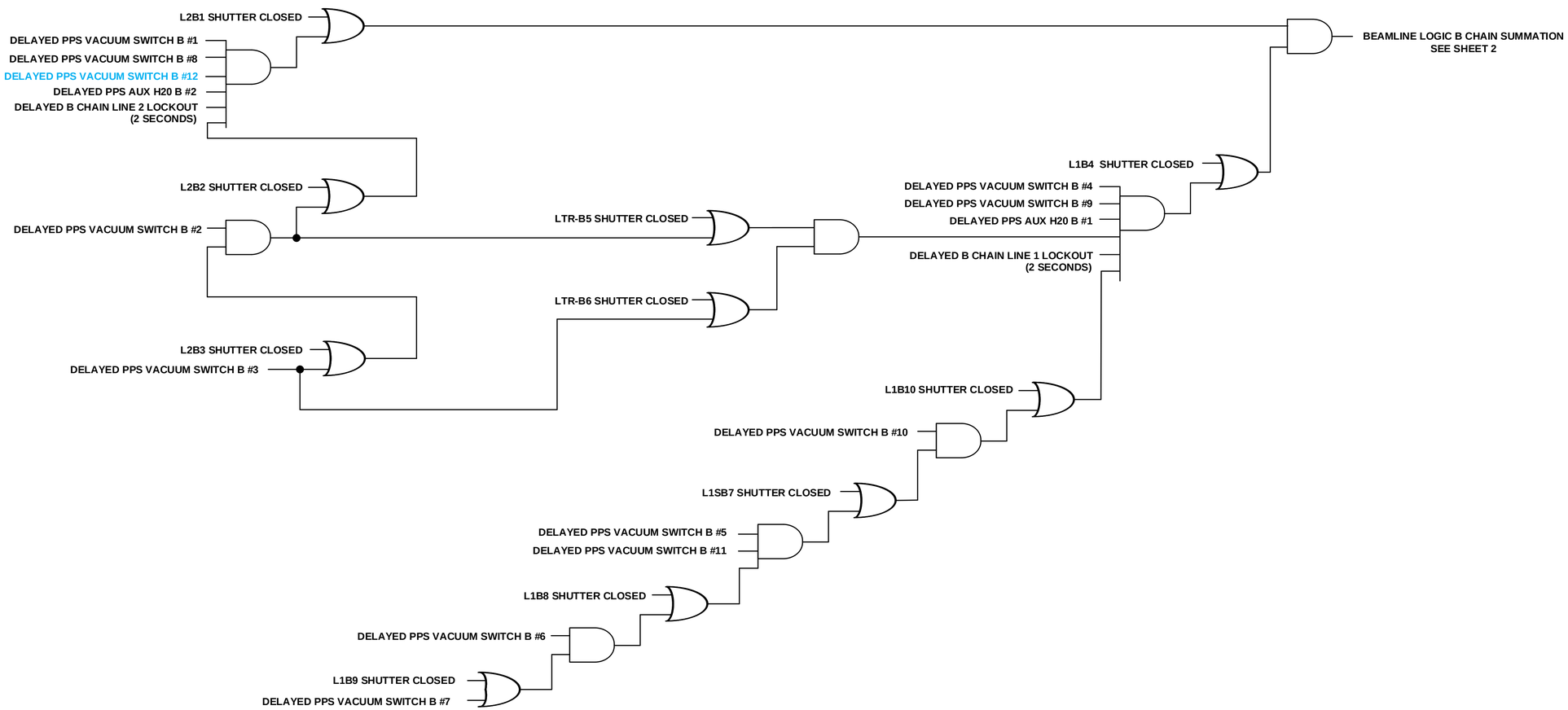


FUTURE COMPONENTS

**B**

| LT-EL-BL-EI (DRAWING DIRECTORY) | LT-EL-BL-EI-PPS-1070-96 (DRAWING NUMBER) | B (REV) |
|---|---|---|
| COMPUTER REPRODUCABLE | SCALE: N/A | SHEET 6 OF 19 |

LT-EL-BL-EI-PPS-1070-96

| REV | DESCRIPTION | DATE | BY | CHECKED | APP |
|---|---|---|---|---|---|
| | SEE SHEET 1 | | | | |

# 7-ID A CHAIN LOGIC
## Photon Shutter Permits

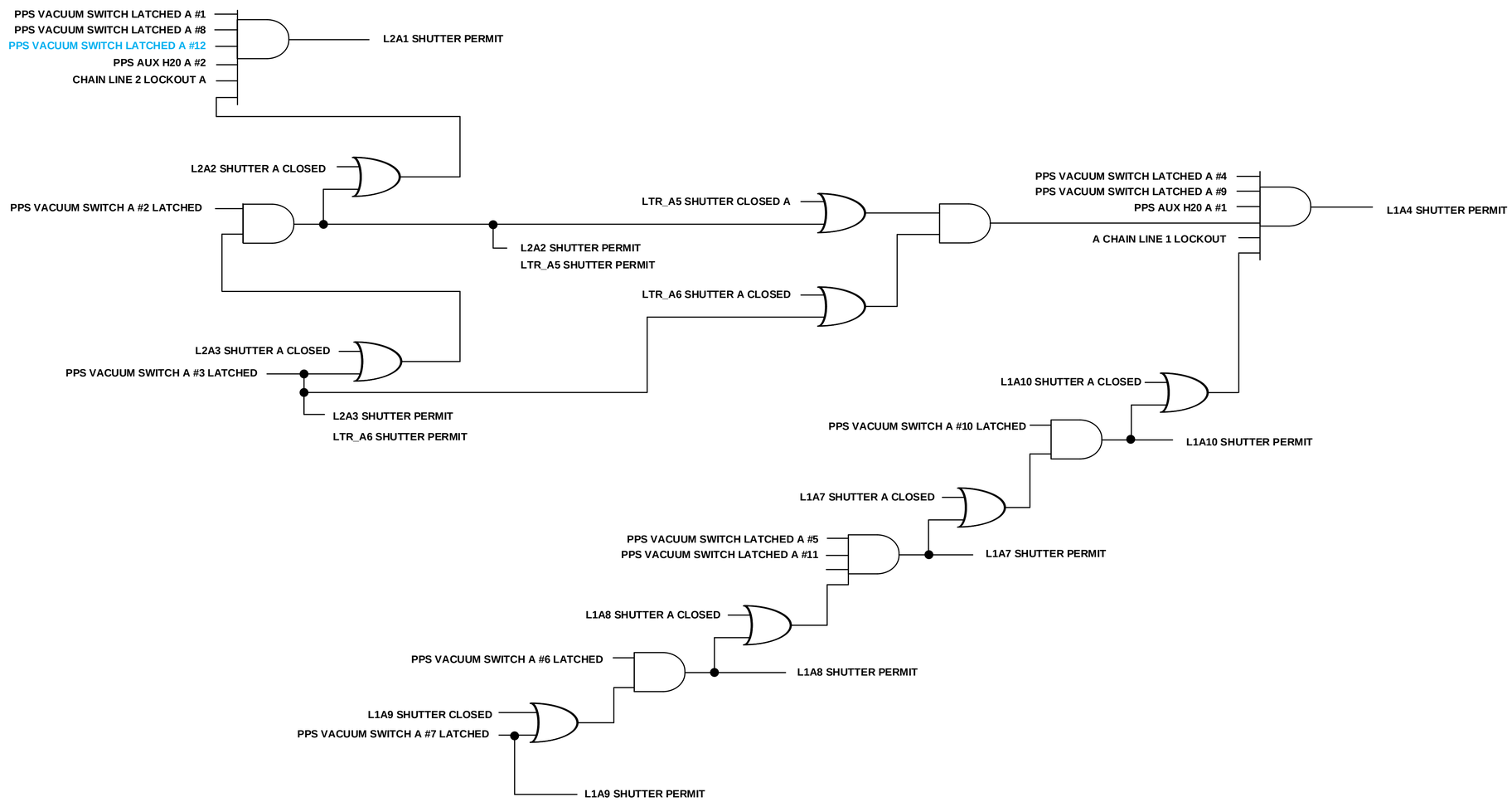


FUTURE COMPONENTS

A

| LT-EL-BL-EI (DRAWING DIRECTORY) | LT-EL-BL-EI-PPS-1070-96 (DRAWING NUMBER) | B (REV) |
|---|---|---|
| COMPUTER REPRODUCABLE | SCALE: N/A | SHEET 7 OF 19 |

LT-EL-BL-EI-PPS-1070-96

| REV | DESCRIPTION | DATE | BY | CHECKED | APP |
|---|---|---|---|---|---|
| | SEE SHEET 1 | | | | |

# 7-ID B CHAIN LOGIC
## Photon Shutter Permits

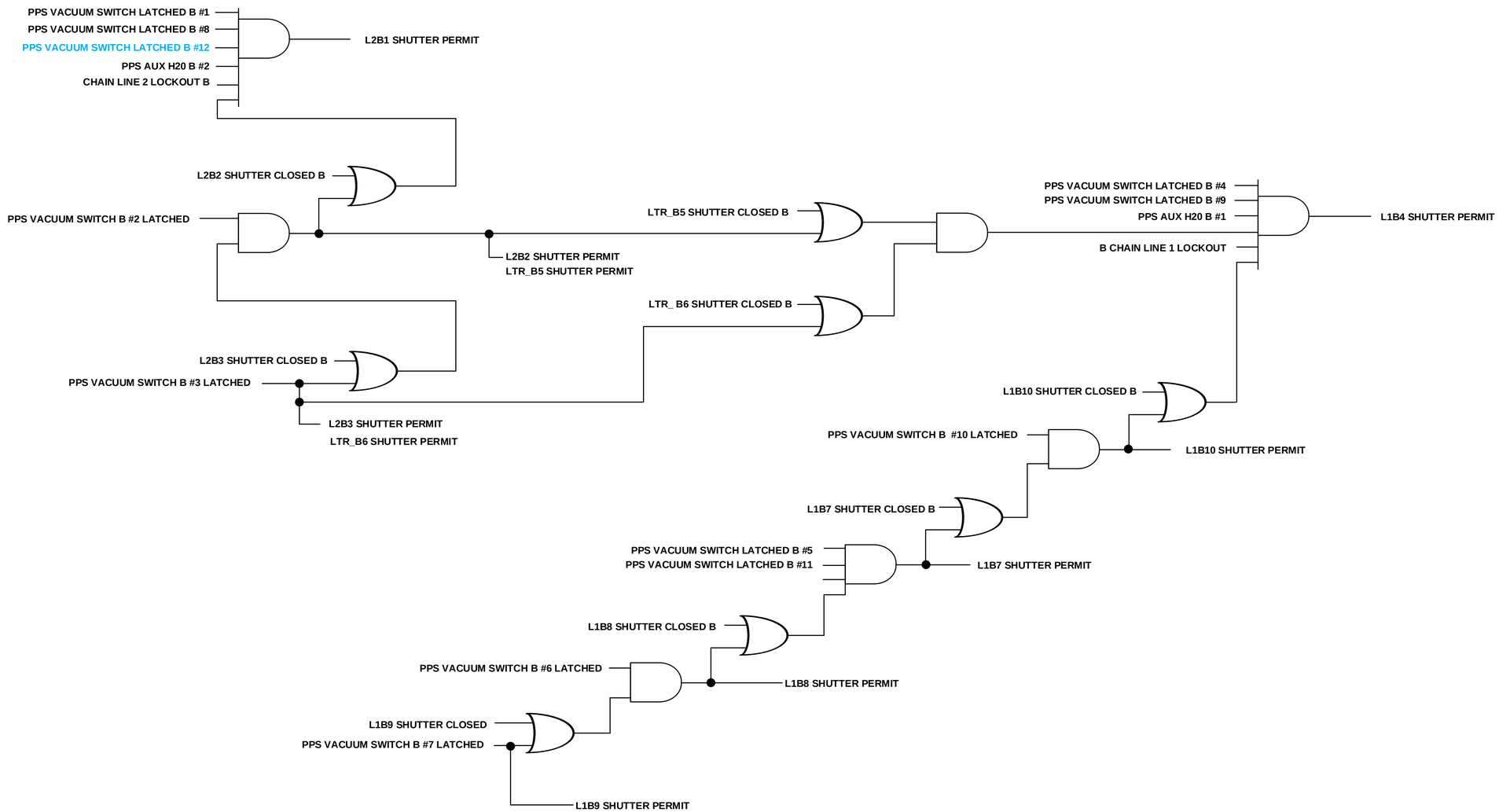


FUTURE COMPONENTS

**B**

| LT-EL-BL-EI (DRAWING DIRECTORY) | LT-EL-BL-EI-PPS-1070-96 (DRAWING NUMBER) | B (REV) |
|---|---|---|
| COMPUTER REPRODUCABLE | SCALE: N/A | SHEET 8 OF 19 |

LT-EL-BL-EI-PPS-1070-96

| REV | DESCRIPTION | DATE | BY | CHECKED | APP |
|---|---|---|---|---|---|
| | SEE SHEET 1 | | | | |

# 7-ID FOE

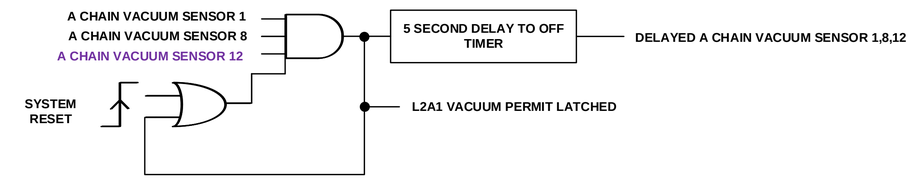


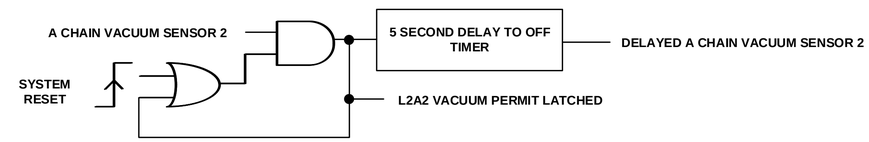


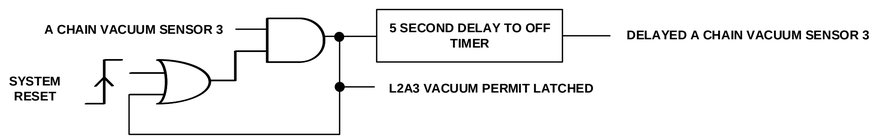


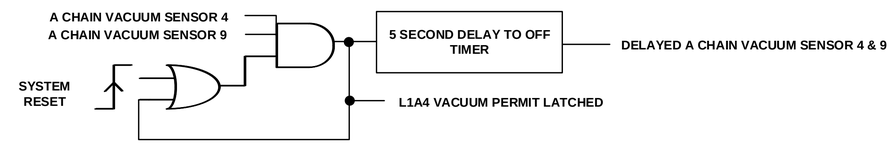


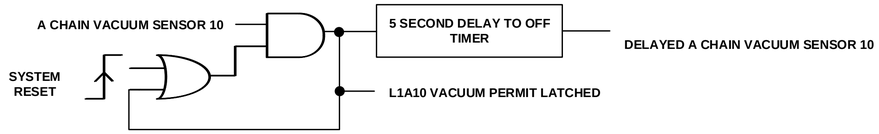


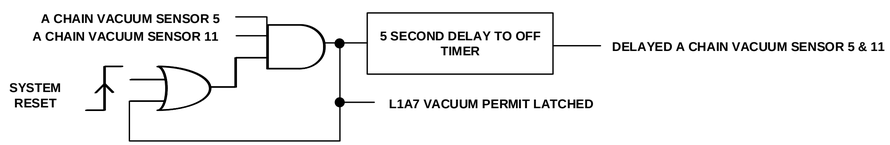


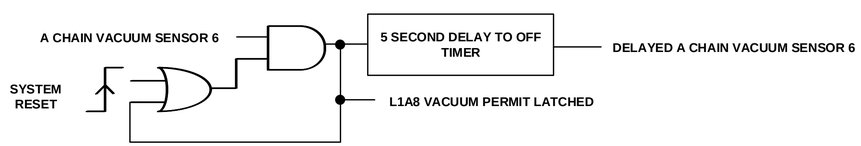


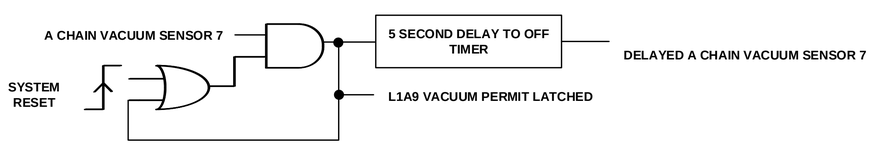


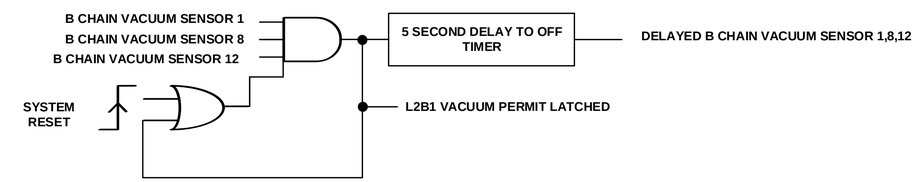


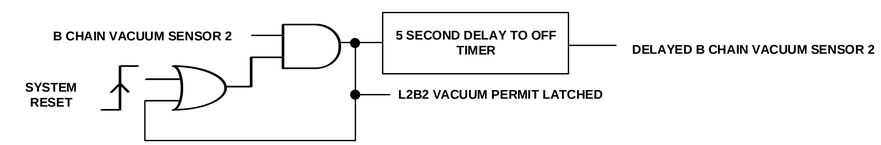


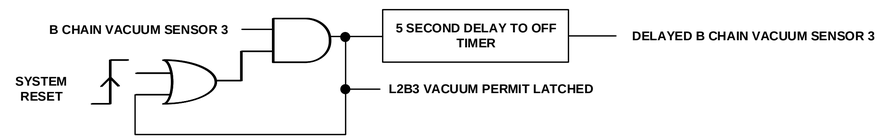


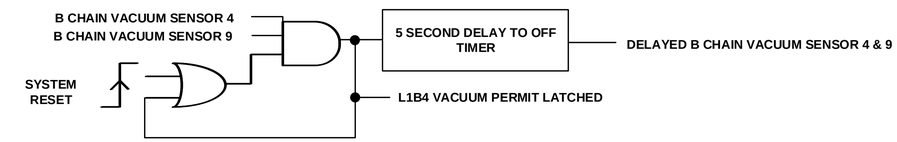


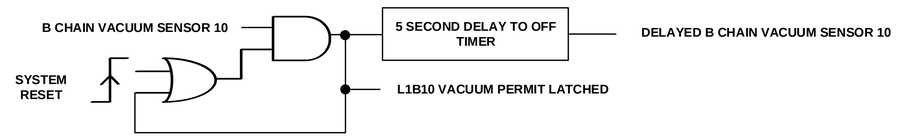


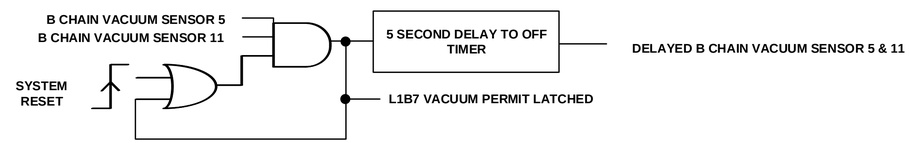


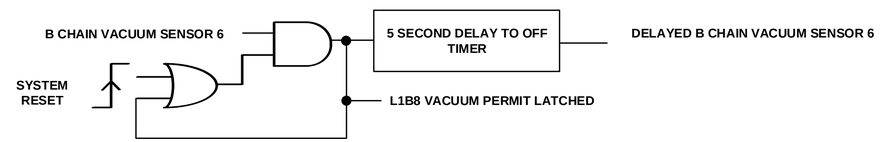


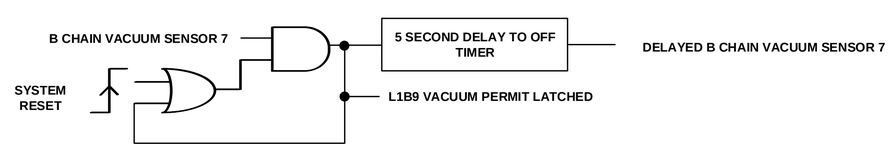


LT-EL-BL-EI-PPS-1070-96

| LT-EL-BL-EI (DRAWING DIRECTORY) | LT-EL-BL-EI-PPS-1070-96 (DRAWING NUMBER) | B (REV) |
|---|---|---|
| COMPUTER REPRODUCABLE | SCALE: N/A | SHEET 9 OF 19 |

| REV | DESCRIPTION | DATE | BY | CHECKED | APP |
|---|---|---|---|---|---|
| | SEE SHEET 1 | | | | |

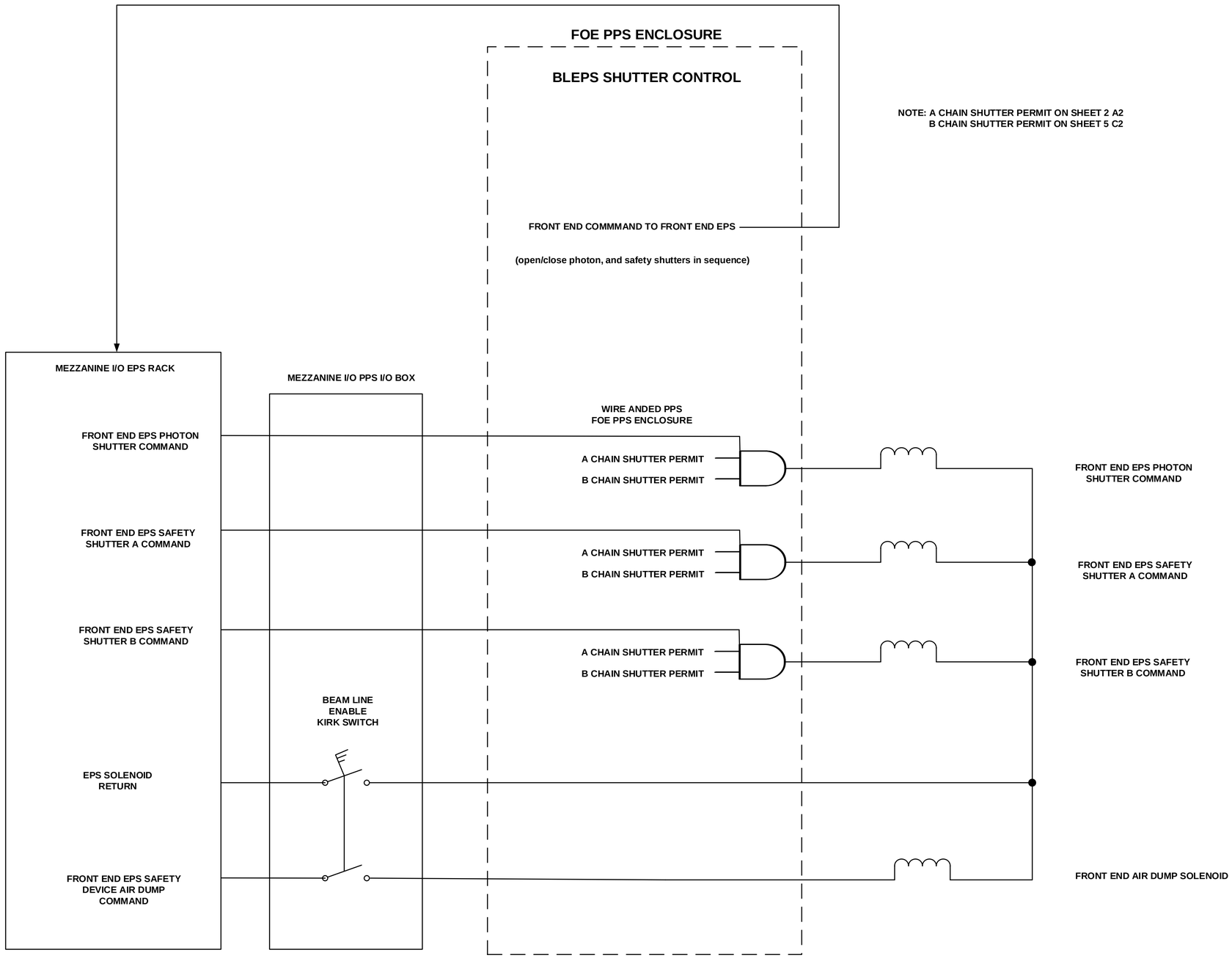


A

| LT-EL-BL-EI | LT-EL-BL-EI-PPS-1070-96 | B |
|---|---|---|
| DRAWING DIRECTORY | DRAWING NUMBER | REV |

COMPUTER REPRODUCABLE | SCALE: N/A | SHEET 10 OF 19

LT-EL-BL-EI-PPS-1070-96

| REV | DESCRIPTION | DATE | BY | CHECKED | APP |
|---|---|---|---|---|---|
| | SEE SHEET 1 | | | | |

# C CHAIN SHUTTER CONTROL
# FRONT END SHUTTERS

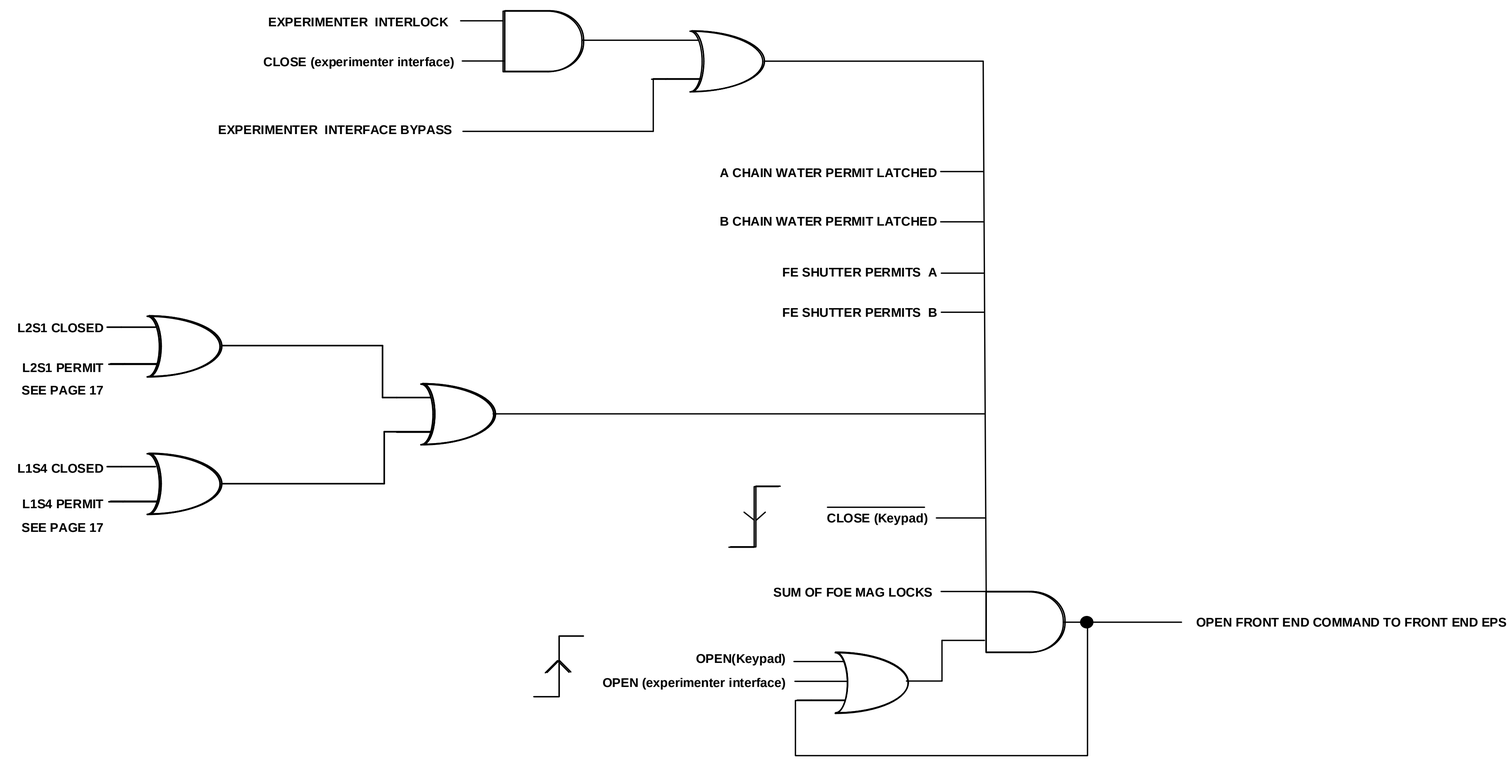


LT-EL-BL-EI-PPS-1070-96

| LT-EL-BL-EI (DRAWING DIRECTORY) | LT-EL-BL-EI-PPS-1070-96 (DRAWING NUMBER) | B (REV) |
|---|---|---|
| COMPUTER REPRODUCABLE | SCALE: N/A | SHEET 11 OF 19 |

| REV | DESCRIPTION | DATE | BY | CHECKED | APP |
|---|---|---|---|---|---|
| | SEE SHEET 1 | | | | |

# C CHAIN SHUTTER CONTROL

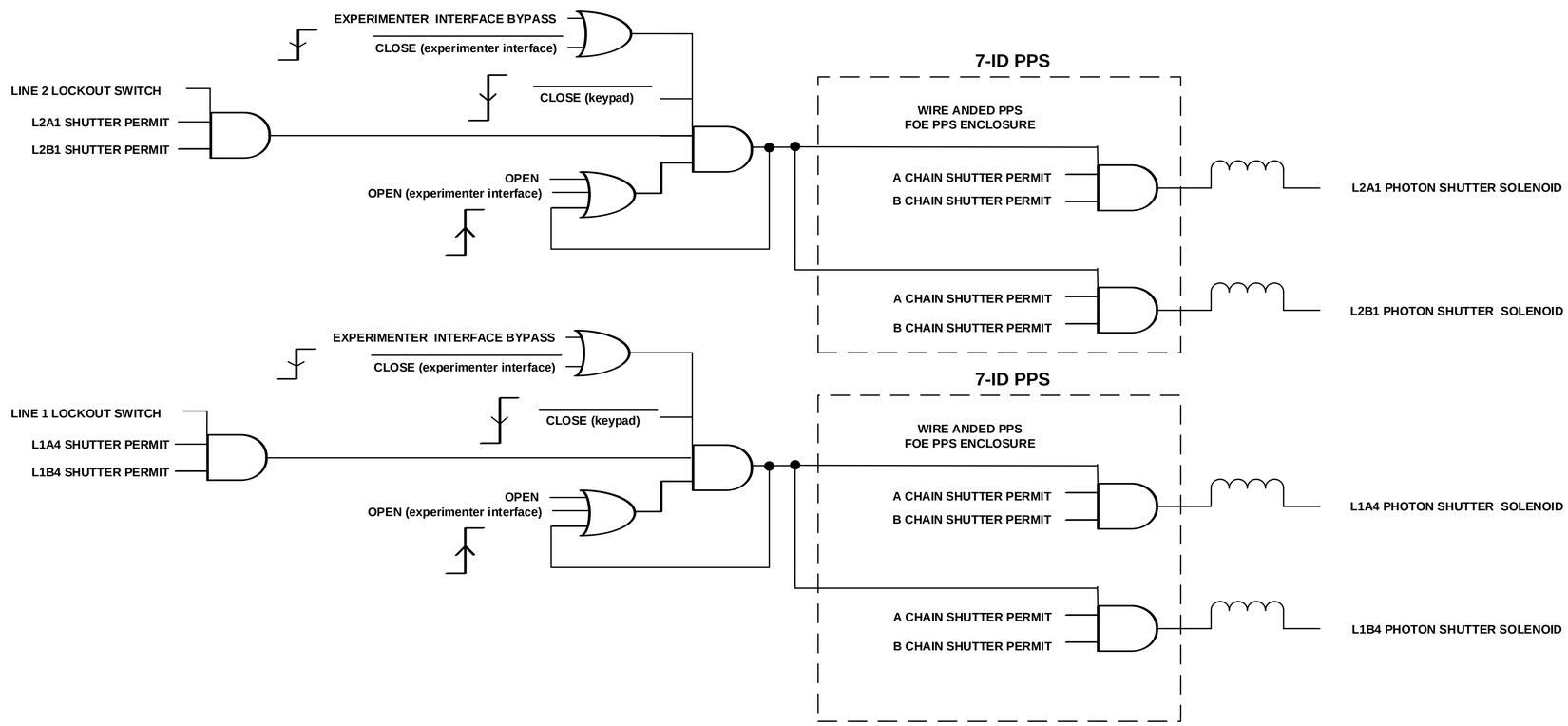


**EPS**

| LT-EL-BL-EI (DRAWING DIRECTORY) | LT-EL-BL-EI-PPS-1070-96 (DRAWING NUMBER) | B (REV) |
|---|---|---|
| COMPUTER REPRODUCABLE | SCALE: N/A | SHEET 12 OF 19 |

LT-EL-BL-EI-PPS-1070-96

| REV | DESCRIPTION | DATE | BY | CHECKED | APP |
|---|---|---|---|---|---|
| | SEE SHEET 1 | | | | |

# C CHAIN SHUTTER CONTROL

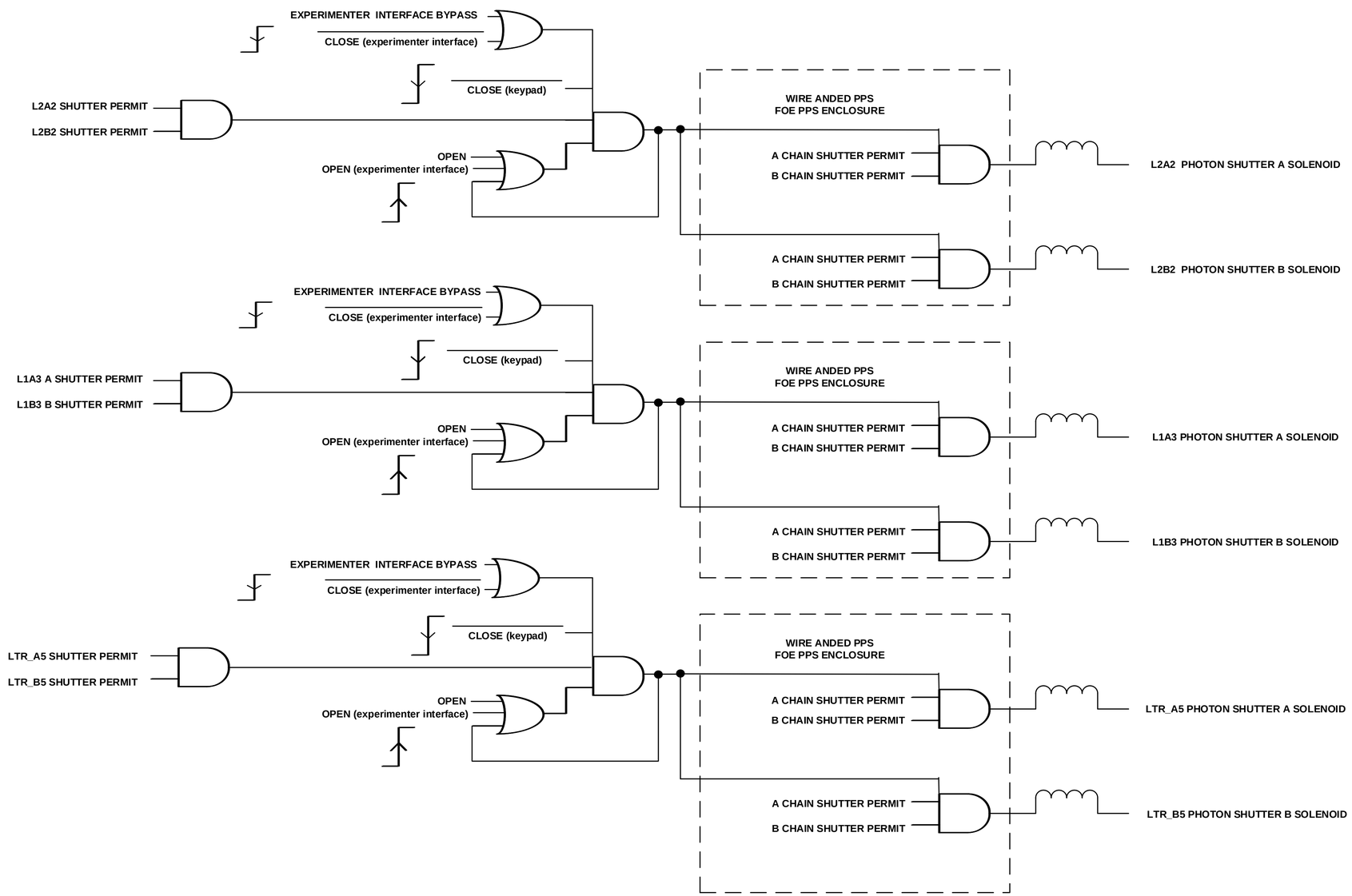


**EPS**

| LT-EL-BL-EI (DRAWING DIRECTORY) | LT-EL-BL-EI-PPS-1070-96 (DRAWING NUMBER) | B (REV) |
|---|---|---|
| COMPUTER REPRODUCABLE | SCALE: N/A | SHEET 13 OF 19 |

LT-EL-BL-EI-PPS-1070-96

| REV | DESCRIPTION | DATE | BY | CHECKED | APP |
|---|---|---|---|---|---|
| | SEE SHEET 1 | | | | |

# C CHAIN SHUTTER CONTROL

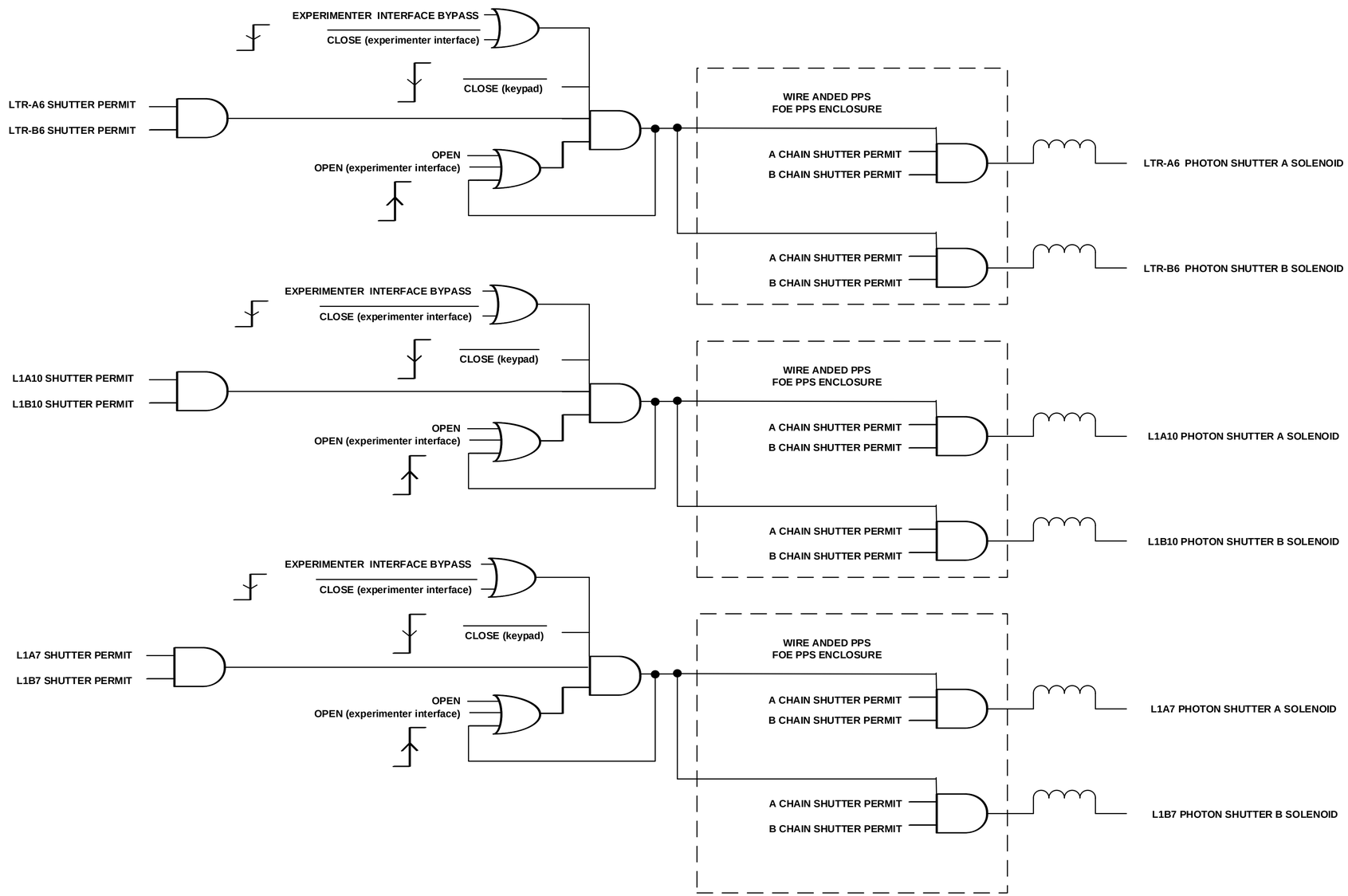


**EPS**

| LT-EL-BL-EI (DRAWING DIRECTORY) | LT-EL-BL-EI-PPS-1070-96 (DRAWING NUMBER) | B (REV) |
|---|---|---|
| COMPUTER REPRODUCABLE | SCALE: N/A | SHEET 14 OF 19 |

LT-EL-BL-EI-PPS-1070-96

| REV | DESCRIPTION | DATE | BY | CHECKED | APP |
|---|---|---|---|---|---|
| | SEE SHEET 1 | | | | |

# C CHAIN SHUTTER CONTROL

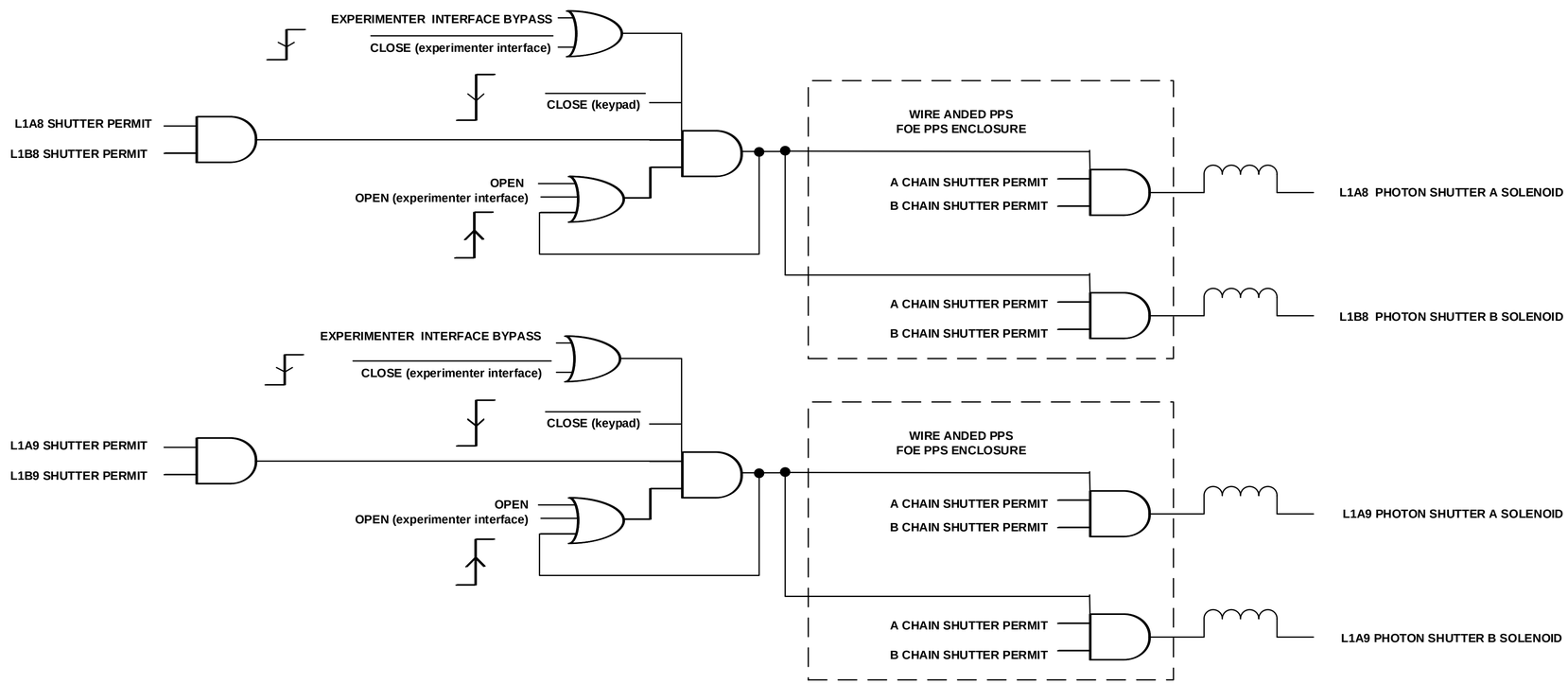


**EPS**

| LT-EL-BL-EI (DRAWING DIRECTORY) | LT-EL-BL-EI-PPS-1070-96 (DRAWING NUMBER) | B (REV) |
|---|---|---|
| COMPUTER REPRODUCABLE | SCALE: N/A | SHEET 15 OF 19 |

LT-EL-BL-EI-PPS-1070-96

| REV | DESCRIPTION | DATE | BY | CHECKED | APP |
|---|---|---|---|---|---|
| | SEE SHEET 1 | | | | |

# C CHAIN DOOR CONTROL FOE

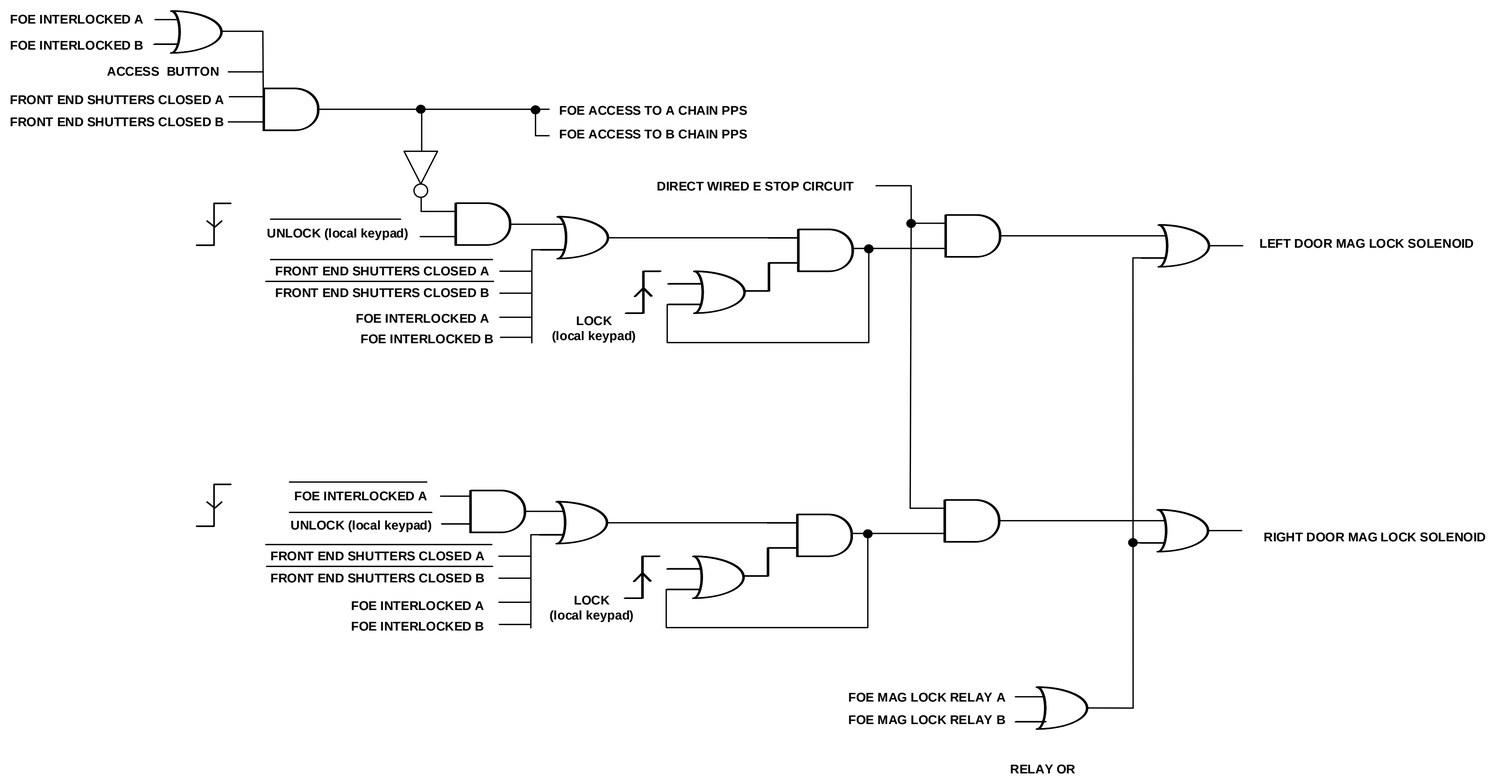


**EPS**

| | | |
|---|---|---|
| LT-EL-BL-EI (DRAWING DIRECTORY) | LT-EL-BL-EI-PPS-1070-96 (DRAWING NUMBER) | B (REV) |
| COMPUTER REPRODUCABLE | SCALE: N/A | SHEET 16 OF 19 |

LT-EL-BL-EI-PPS-1070-96

| REV | DESCRIPTION | DATE | BY | CHECKED | APP |
|---|---|---|---|---|---|
| | SEE SHEET 1 | | | | |

# 7-ID C CHAIN LOGIC
## Shutter Permits

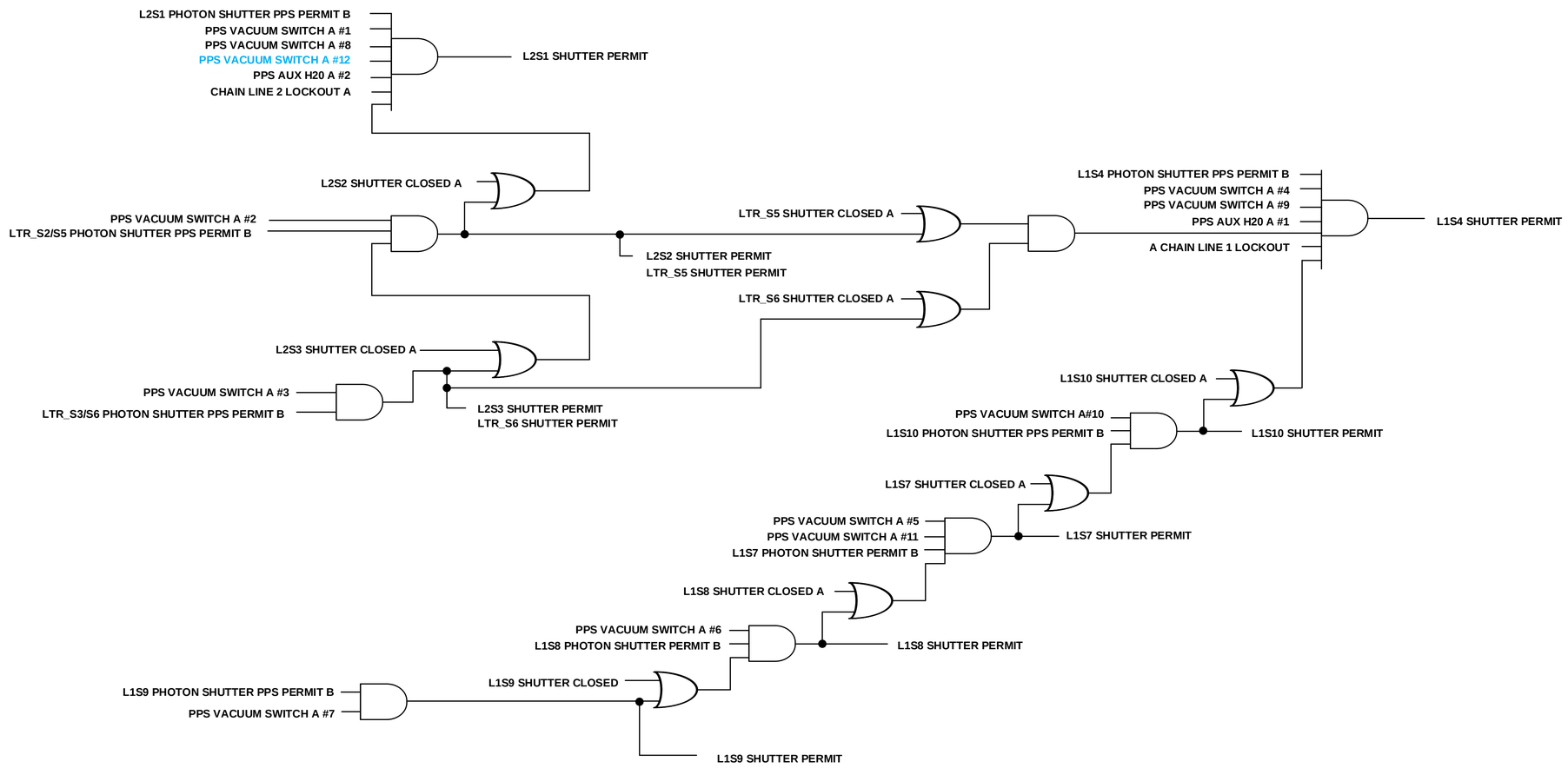


FUTURE COMPONENTS

LT-EL-BL-EI-PPS-1070-96

| LT-EL-BL-EI (DRAWING DIRECTORY) | LT-EL-BL-EI-PPS-1070-96 (DRAWING NUMBER) | B (REV) |
|---|---|---|
| COMPUTER REPRODUCABLE | SCALE: N/A | SHEET 17 OF 19 |

| REV | DESCRIPTION | DATE | BY | CHECKED | APP |
|---|---|---|---|---|---|
| | SEE SHEET 1 | | | | |

# FAULTS AND ALARMS A CHAIN

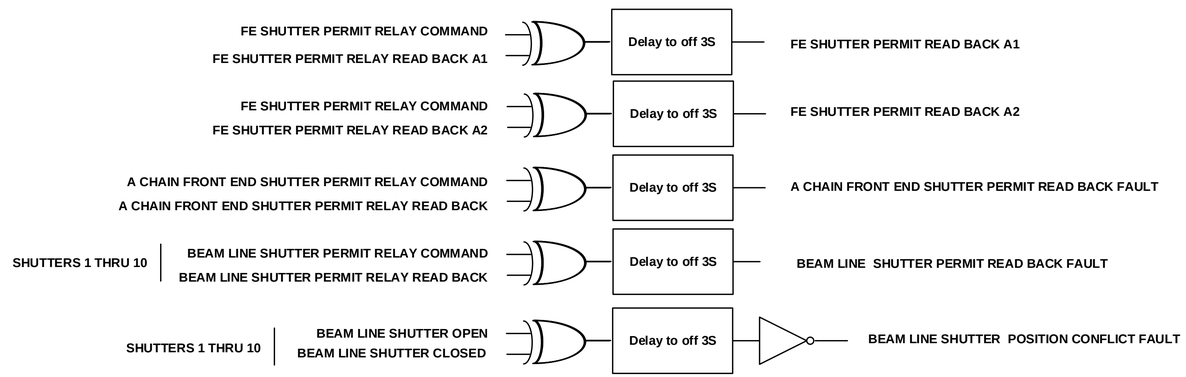


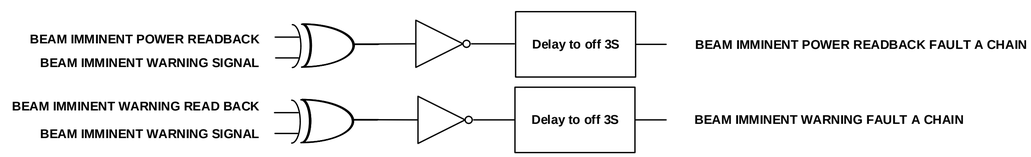


A CHAIN PROXIMITY SENSOR FAULT = DIRECT FROM SENSOR MODULE

A CHAIN HARDWARE FAULT = GENERATED FROM SYSTEM FAULT DATA

A CHAIN BEAM LINE FAULTA ARE SENT TO THE CONTROL ROOM ONLY WHEN BEAMLINE IS ENABLED AT FRONT END

LT-EL-BL-EI-PPS-1070-96

| LT-EL-BL-EI (DRAWING DIRECTORY) | LT-EL-BL-EI-PPS-1070-96 (DRAWING NUMBER) | B (REV) |
|---|---|---|
| COMPUTER REPRODUCABLE | SCALE: N/A | SHEET 18 OF 19 |

| REV | DESCRIPTION | DATE | BY | CHECKED | APP |
|---|---|---|---|---|---|
| | SEE SHEET 1 | | | | |

# FAULTS AND ALARMS B CHAIN

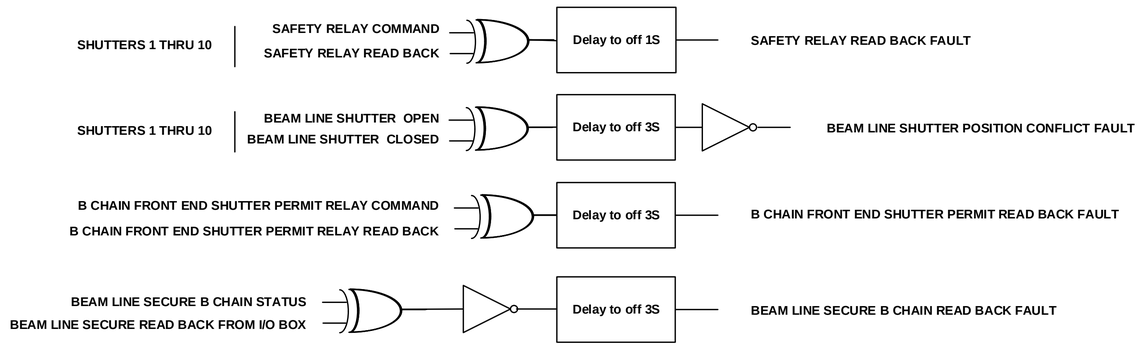


B CHAIN SAFETY SWITCH FAULTS ARE GENERATED BY FUNCTION BLOCKS, DOORS, CABLE LABYRINTHS

B CHAIN PROXIMITY SENSOR FAULT = DIRECT FROM SENSOR MODULE

B CHAIN HARDWARE FAULT = GENERATED FROM SYSTEM FAULT DATA

B CHAIN BEAM LINE FAULTA ARE SENT TO THE CONTROL ROOM ONLY WHEN BEAMLINE IS ENABLED AT FRONT END

LT-EL-BL-EI-PPS-1070-96

| LT-EL-BL-EI (DRAWING DIRECTORY) | LT-EL-BL-EI-PPS-1070-96 (DRAWING NUMBER) | B (REV) |
|---|---|---|
| COMPUTER REPRODUCABLE | SCALE: N/A | SHEET 19 OF 19 |

| REV | DESCRIPTION | DATE | BY | CHECKED | APP |
|---|---|---|---|---|---|
| A | INITIAL RELEASE | 1/22/2018 | SEJ | JM | SB |
| B | REVISED PER ECN LT-ECN-019-2053 | 11/06/2018 | SEJ | JM | SB |

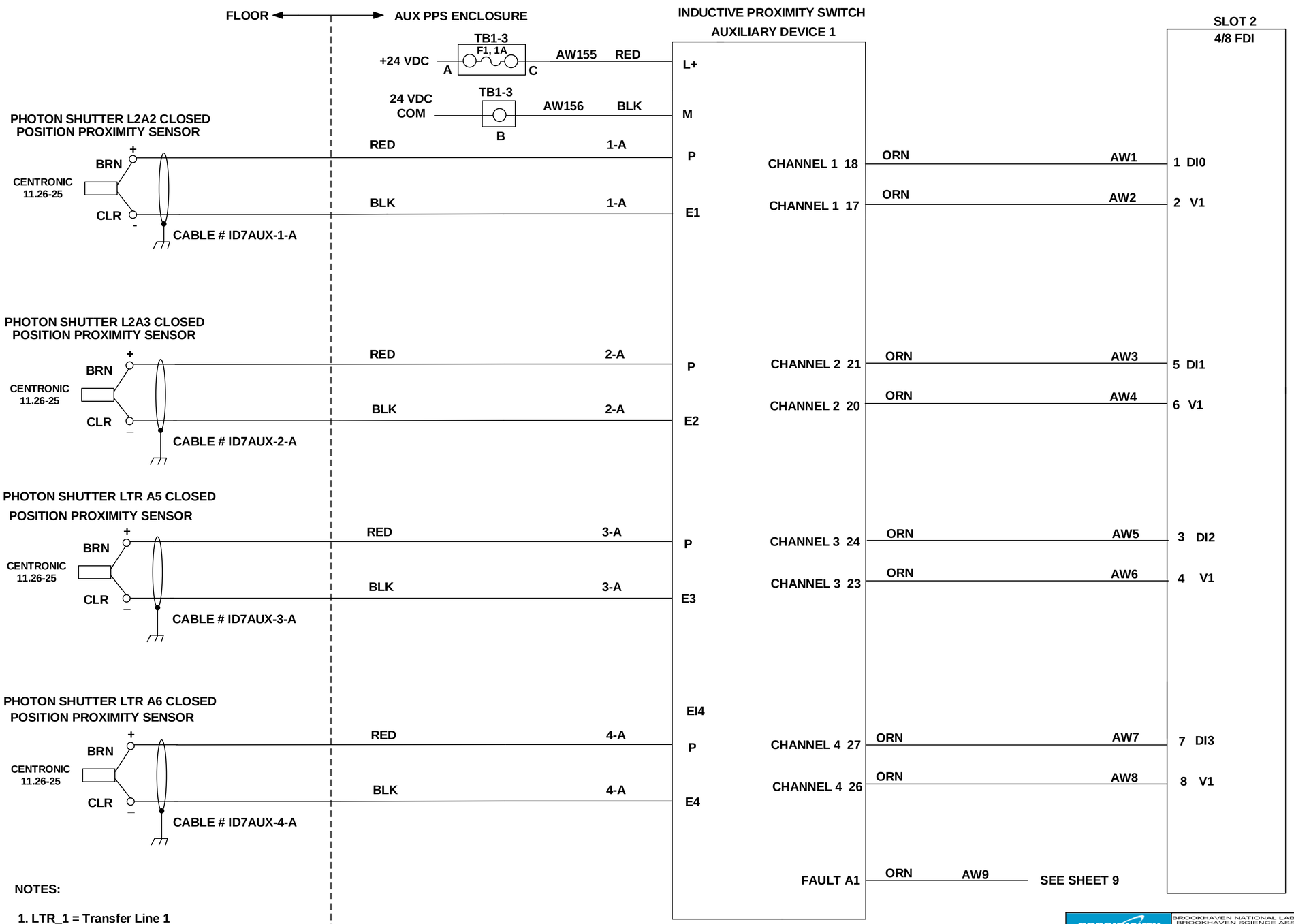


**NOTES:**

1. LTR_1 = Transfer Line 1
2. LTR_2 = Transfer Line 2

A

LT-EL-BL-EI-PPS-1070-90

BROOKHAVEN NATIONAL LABORATORY

BROOKHAVEN NATIONAL LABORATORY
BROOKHAVEN SCIENCE ASSOCIATES
UPTON, NEW YORK 11973

*Exploring Life's Mysteries, Protecting Its Future*

NSLSII NATIONAL SYNCHROTRON LIGHT SOURCE II

UNLESS OTHERWISE SPECIFIED
INTEGER TOLERANCES ± .06
DECIMAL TOLERANCES
.X ± .030
.XX ± .015
.XXX ± .010
ANGULAR TOLERANCE ± 0.5°
UNSPECIFIED RADII .02 MAX
125 FINISH
BREAK SHARP CORNERS AND EDGES
MAX .03 MIN .005

UNLESS OTHERWISE SPECIFIED DIMENSIONS ARE IN INCHES
DIMENSIONS IN [*, **] ARE MILLIMETERS EQUIV. FOR REF. ONLY

INTERPRET DRAWING AS PER ANSI Y14.5 OR Y32.2

ESH&Q RISK LEVEL A-1

| | | DATE | OUTSTANDING ECN'S |
|---|---|---|---|
| DRWN BY | S. JARZABKOWSKI | 1/24/2018 | |
| CHK BY | J. MALLEY | 1/26/2018 | |
| ENG APP | S. BUDA | 1/24/2018 | |
| SUPV APP | G. GANETIS | 1/26/2018 | |
| QA APP | E. CHESWICK | 1/26/2018 | |
| ESH APP | R. LEE | 1/26/2018 | |

JOB NUMBER | USED ON DWG. NO.

# WIRING DIAGRAM, 7-ID-AUX (SST-AUX) A CHAIN AND B CHAIN

LT-EL-BL-EI — DRAWING DIRECTORY
LT-EL-BL-EI-PPS-1070-90 — DRAWING NUMBER
B — REV

COMPUTER REPRODUCIBLE | SCALE: N/A | SHEET 1 OF 34

| REV | DESCRIPTION | DATE | BY | CHECKED | APP |
|---|---|---|---|---|---|
| | SEE SHEET 1 | | | | |

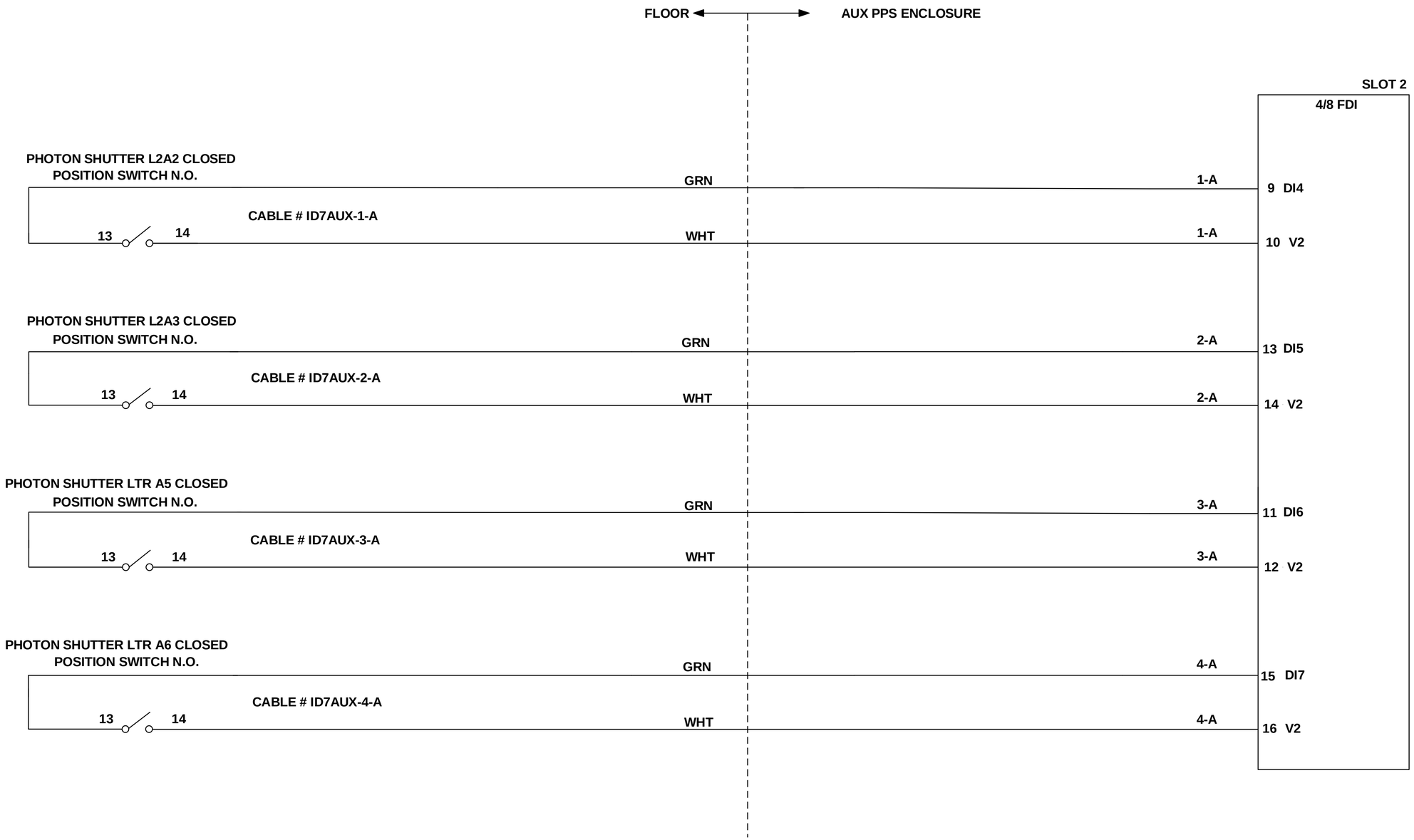


**NOTES:**

1. LTR_1 = Transfer Line 1
2. LTR_2 = Transfer Line 2

**A**

| | | |
|---|---|---|
| LT-EL-BL-EI (DRAWING DIRECTORY) | LT-EL-BL-EI-PPS-1070-90 (DRAWING NUMBER) | B (REV) |
| COMPUTER REPRODUCIBLE | SCALE: N/A | SHEET 2 OF 34 |

LT-EL-BL-EI-PPS-1070-90

| REV | DESCRIPTION | DATE | BY | CHECKED | APP |
|---|---|---|---|---|---|
| | SEE SHEET 1 | | | | |

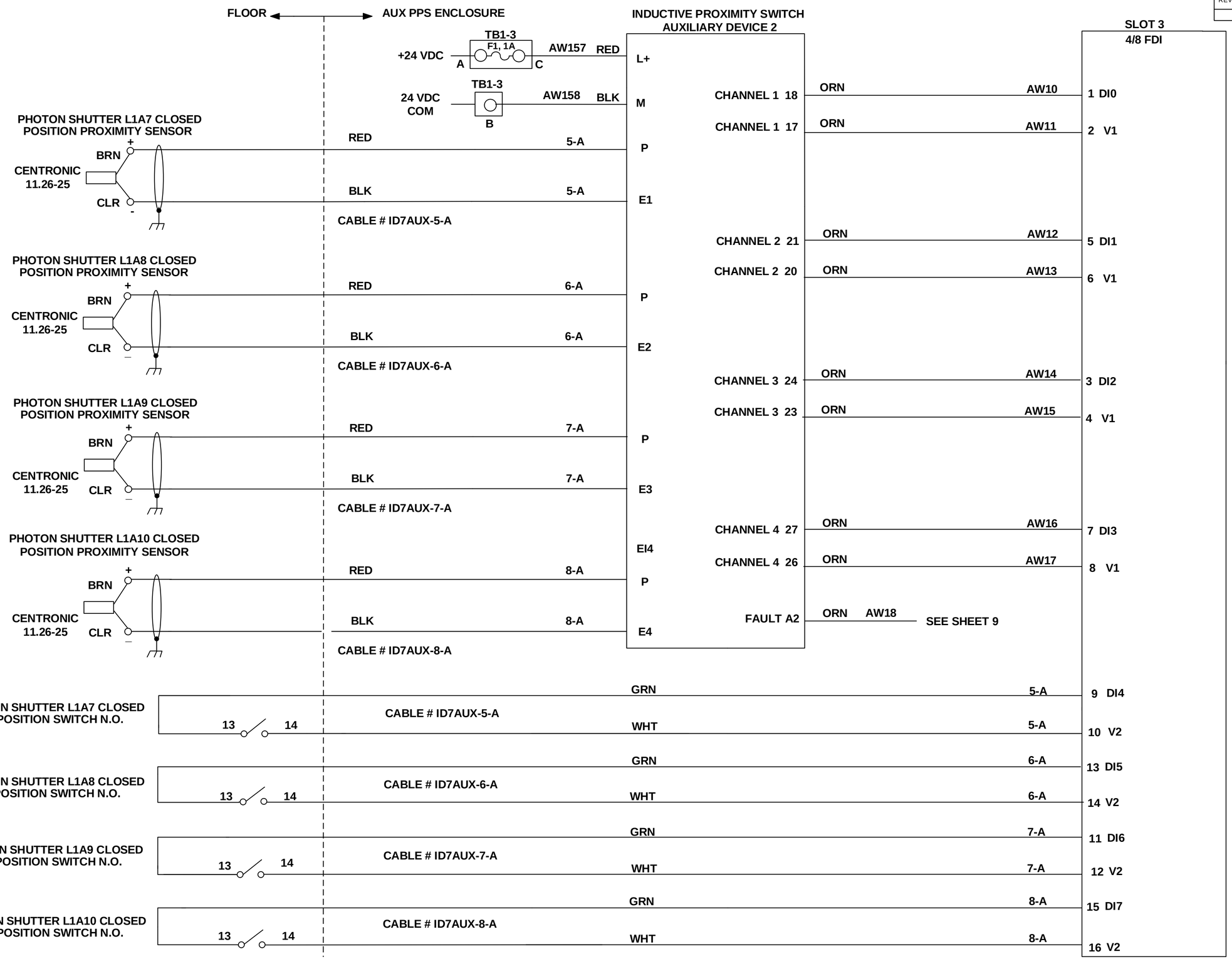


A

| LT-EL-BL-EI | LT-EL-BL-EI-PPS-1070-90 | B |
|---|---|---|
| DRAWING DIRECTORY | DRAWING NUMBER | REV |

COMPUTER REPRODUCIBLE | SCALE: N/A | SHEET 3 OF 34

LT-EL-BL-EI-PPS-1070-90

| REV | DESCRIPTION | DATE | BY | CHECKED | APP |
|---|---|---|---|---|---|
| | SEE SHEET 1 | | | | |

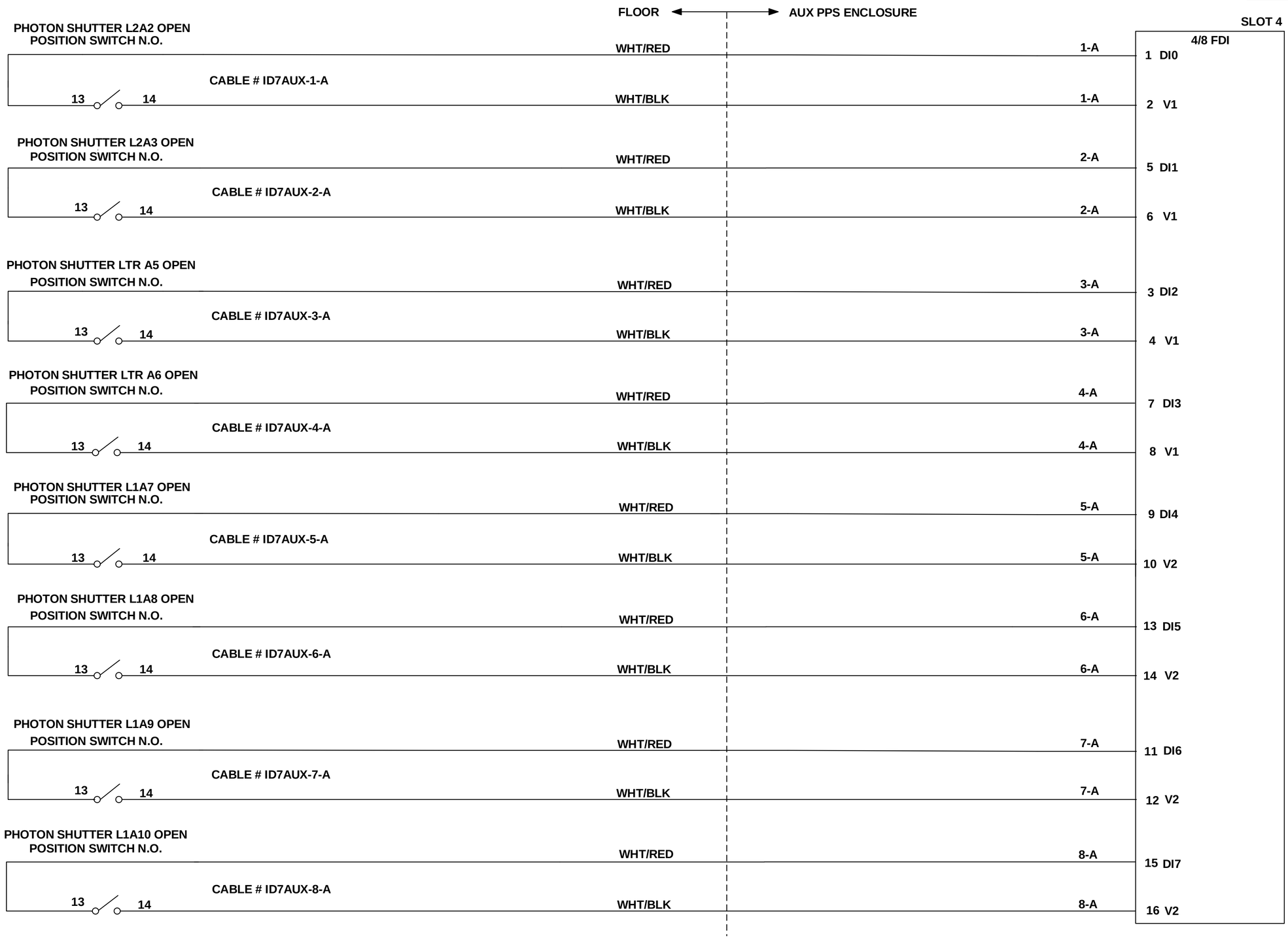


NOTES:

1. LTR_1 = Transfer Line 1
2. LTR_2 = Transfer Line 2

A

LT-EL-BL-EI-PPS-1070-90

| LT-EL-BL-EI (DRAWING DIRECTORY) | LT-EL-BL-EI-PPS-1070-90 (DRAWING NUMBER) | B (REV) |
|---|---|---|
| COMPUTER REPRODUCIBLE | SCALE: N/A | SHEET 4 OF 34 |

| REV | DESCRIPTION | DATE | BY | CHECKED | APP |
|---|---|---|---|---|---|
| | SEE SHEET 1 | | | | |

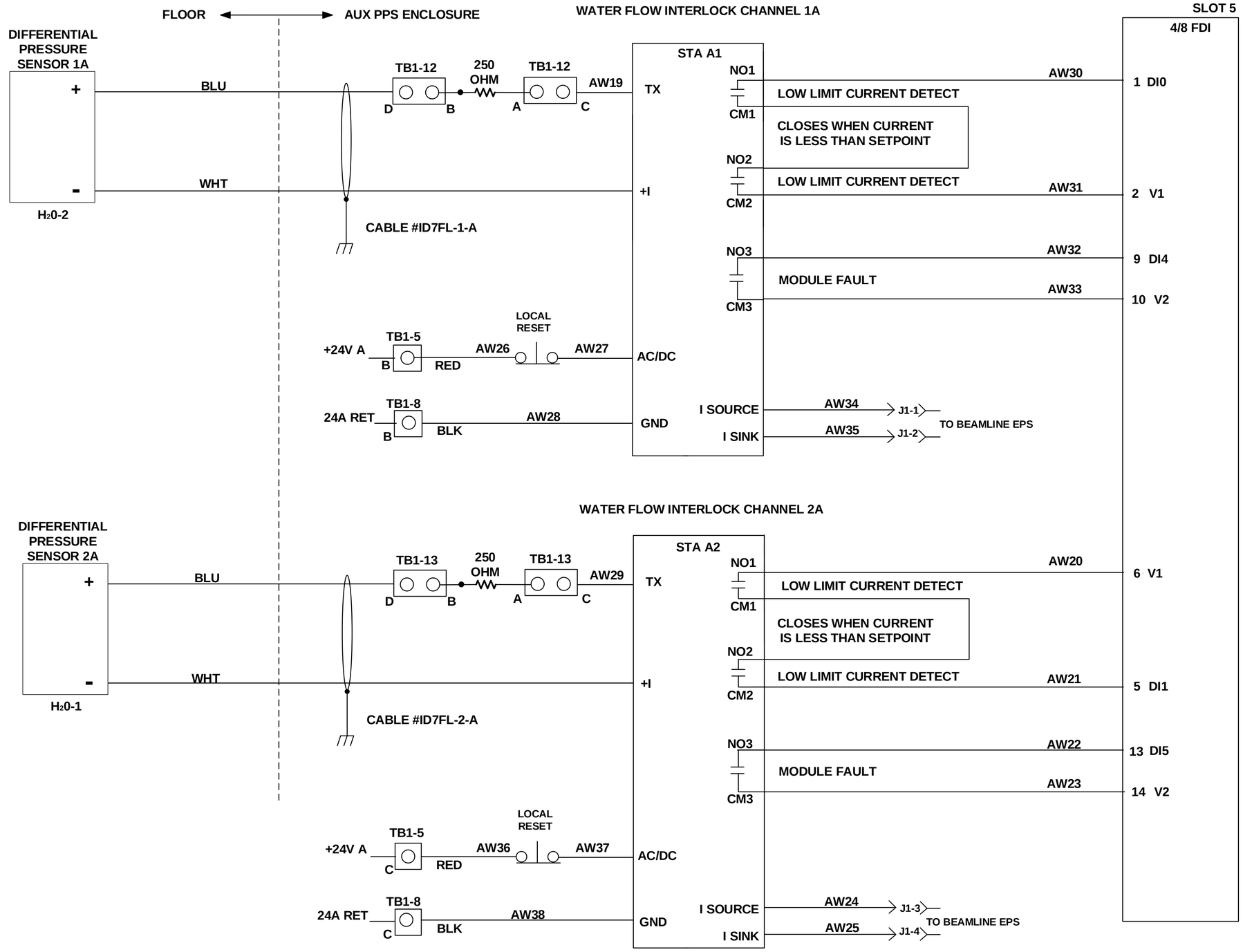


| STA DEVICE PARAMETER CONFIGURATION | | |
|---|---|---|
| DEVICE NAME / LOCATION: | STA_AUX A1 ID7 | |
| MODEL : | STA/HLPRG/3PRG/24DC/-AO[DIN] | |
| INPUT | | |
| Measurement Type: | Current | |
| Input Range: | Zero: 4.0 mA, Full: 20 mA | |
| Filter Settings: | 60 Hz | |
| Broken wire: | Enable | |
| TRIMMING | Disable | |
| SCALING | Zero: 0.0, Full: 2.61 GPM | |
| DISPLAY | | |
| Display Source: | Process Variable (PV) | |
| Precision: | Auto | |
| ALARMS | ALARM 1 | ALARM 2 |
| Mode: | Low Trip | Hi Trip |
| Latching: | Off | Off |
| Trip point: | 0.5 GPM | 0.0 GPM |
| Dead Band: | 0.0 GPM | 0.0 GPM |
| Delay: | 0 s | 0 s |
| ANALOG OUTPUT | | |
| Mode: | Current | |
| Fail mode: | Fail Low | |
| AO Range: | Zero: 4.0, Full: 20.0 mA | |
| Damping: | Disable (0.0 s) | |

| STA DEVICE PARAMETER CONFIGURATION | | |
|---|---|---|
| DEVICE NAME / LOCATION: | STA_AUX A2 ID7 | |
| MODEL : | STA/HLPRG/3PRG/24DC/-AO[DIN] | |
| INPUT | | |
| Measurement Type: | Current | |
| Input Range: | Zero: 4.0 mA, Full: 20 mA | |
| Filter Settings: | 60 Hz | |
| Broken wire: | Enable | |
| TRIMMING | Disable | |
| SCALING | Zero: 0.0, Full: 1.5 GPM | |
| DISPLAY | | |
| Display Source: | Process Variable (PV) | |
| Precision: | Auto | |
| ALARMS | ALARM 1 | ALARM 2 |
| Mode: | Low Trip | Hi Trip |
| Latching: | Off | Off |
| Trip point: | 0.6 GPM | 0.0 GPM |
| Dead Band: | 0.0 GPM | 0.0 GPM |
| Delay: | 0 s | 0 s |
| ANALOG OUTPUT | | |
| Mode: | Current | |
| Fail mode: | Fail Low | |
| AO Range: | Zero: 4.0, Full: 20.0 mA | |
| Damping: | Disable (0.0 s) | |

A

LT-EL-BL-EI-PPS-1070-91

| LT-EL-BL-EI (DRAWING DIRECTORY) | LT-EL-BL-EI-PPS-1070-91 (DRAWING NUMBER) | B (REV) |
|---|---|---|
| COMPUTER REPRODUCABLE | SCALE: N/A | SHEET 5 OF 34 |

| REV | DESCRIPTION | DATE | BY | CHECKED | APP |
|---|---|---|---|---|---|
| | SEE SHEET 1 | | | | |

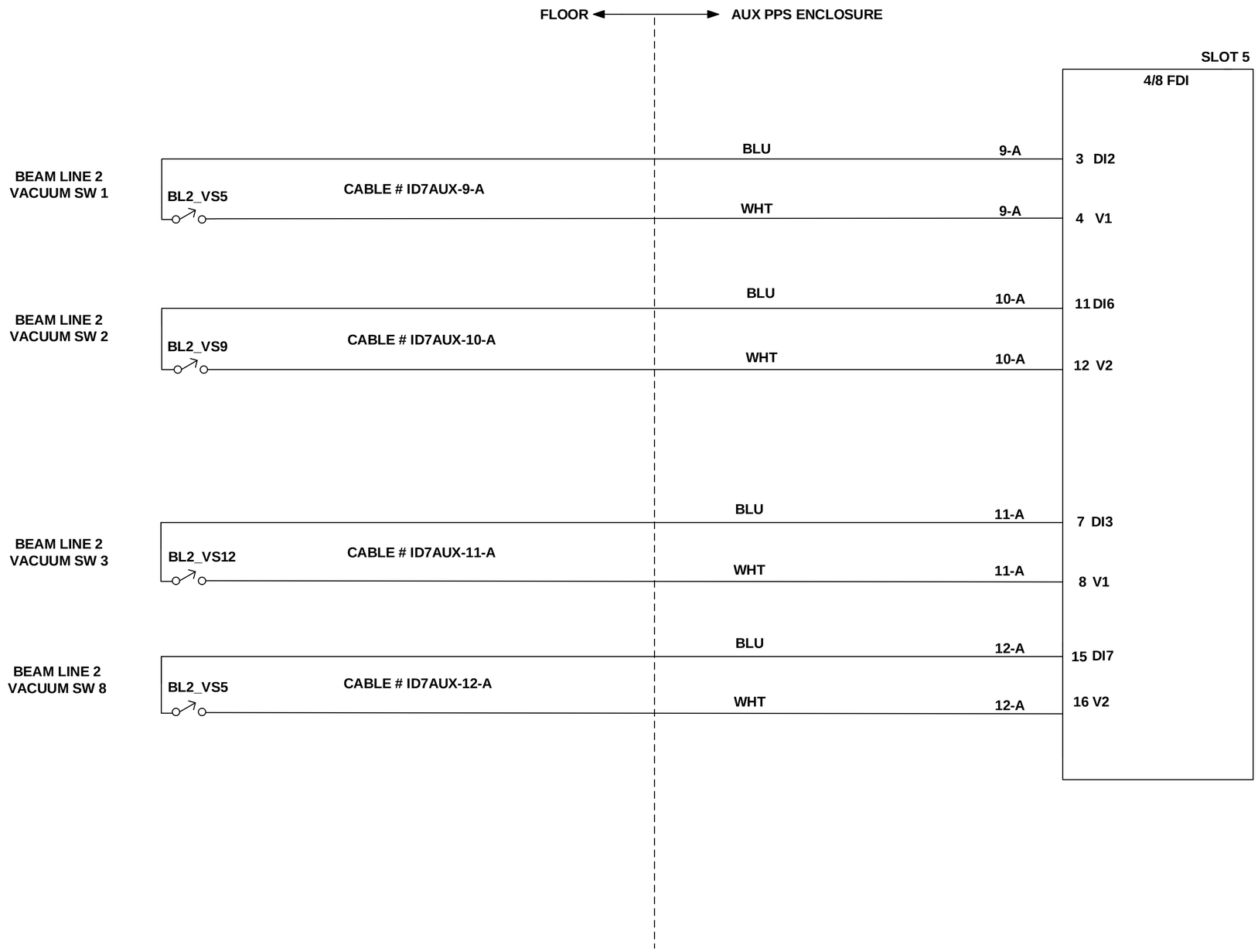


**NOTES:**

**1. VACUUM SWITCHES ARE CLOSED WHEN BEAMLINE IS SAFE.**

**A**

| LT-EL-BL-EI (DRAWING DIRECTORY) | LT-EL-BL-EI-PPS-1070-91 (DRAWING NUMBER) | B (REV) |
|---|---|---|
| COMPUTER REPRODUCIBLE | SCALE: N/A | SHEET 6 OF 34 |

LT-EL-BL-EI-PPS-1070-91

| REV | DESCRIPTION | DATE | BY | CHECKED | APP |
|---|---|---|---|---|---|
| | SEE SHEET 1 | | | | |

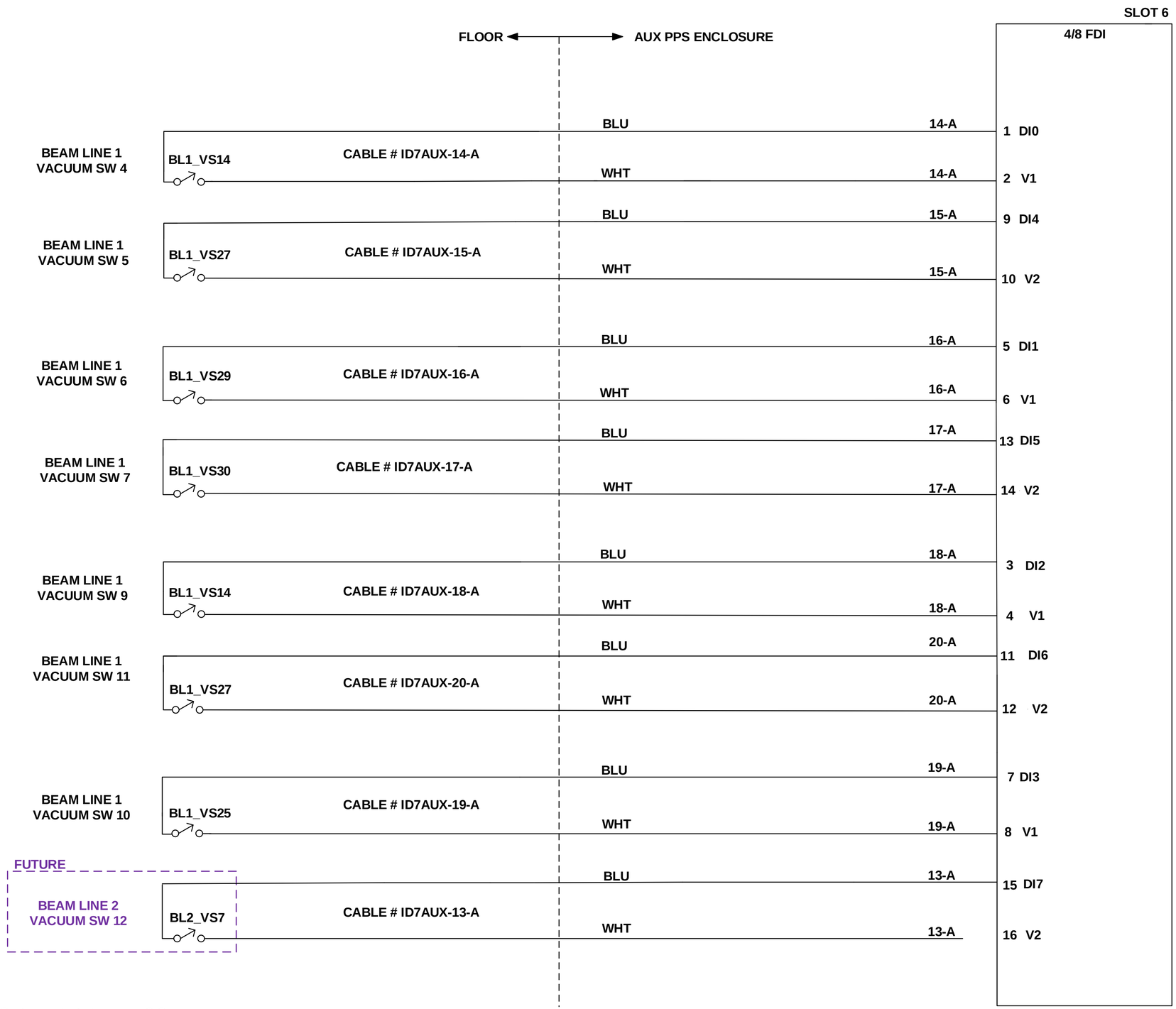


**NOTES:**

1. VACUUM SWITCHES ARE CLOSED WHEN BEAMLINE IS SAFE.

A

LT-EL-BL-EI-PPS-1070-90

| LT-EL-BL-EI (DRAWING DIRECTORY) | LT-EL-BL-EI-PPS-1070-90 (DRAWING NUMBER) | B |
|---|---|---|
| COMPUTER REPRODUCIBLE | SCALE: N/A | SHEET 7 OF 34 |

| REV | DESCRIPTION | DATE | BY | CHECKED | APP |
|---|---|---|---|---|---|
| | SEE SHEET 1 | | | | |

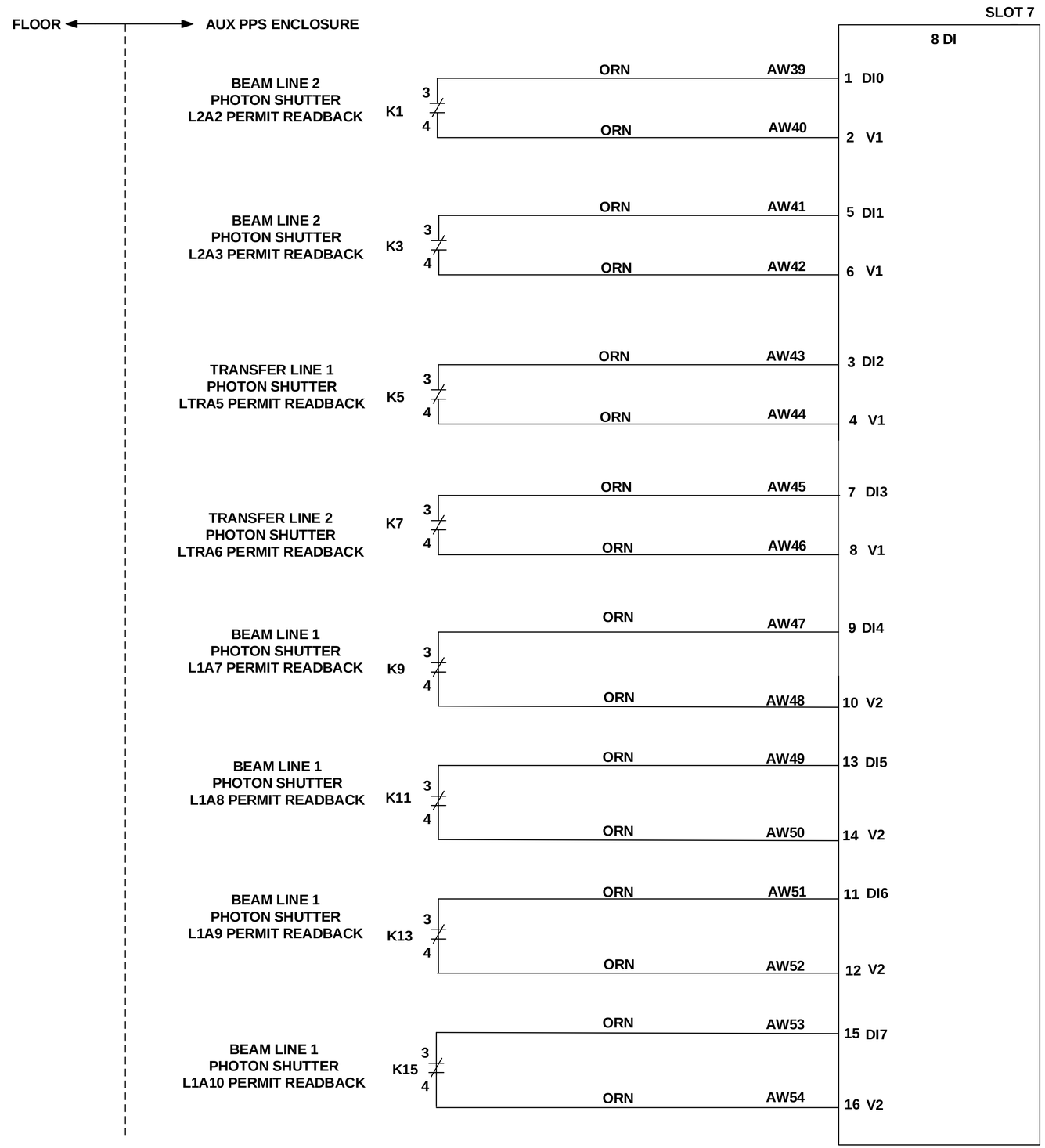


A

| LT-EL-BL-EI | LT-EL-BL-EI-PPS-1070-90 | B |
|---|---|---|
| DRAWING DIRECTORY | DRAWING NUMBER | REV |

COMPUTER REPRODUCIBLE | SCALE: N/A | SHEET 8 OF 34

LT-EL-BL-EI-PPS-1070-90

| REV | DESCRIPTION | DATE | BY | CHECKED | APP |
|---|---|---|---|---|---|
| | SEE SHEET 1 | | | | |

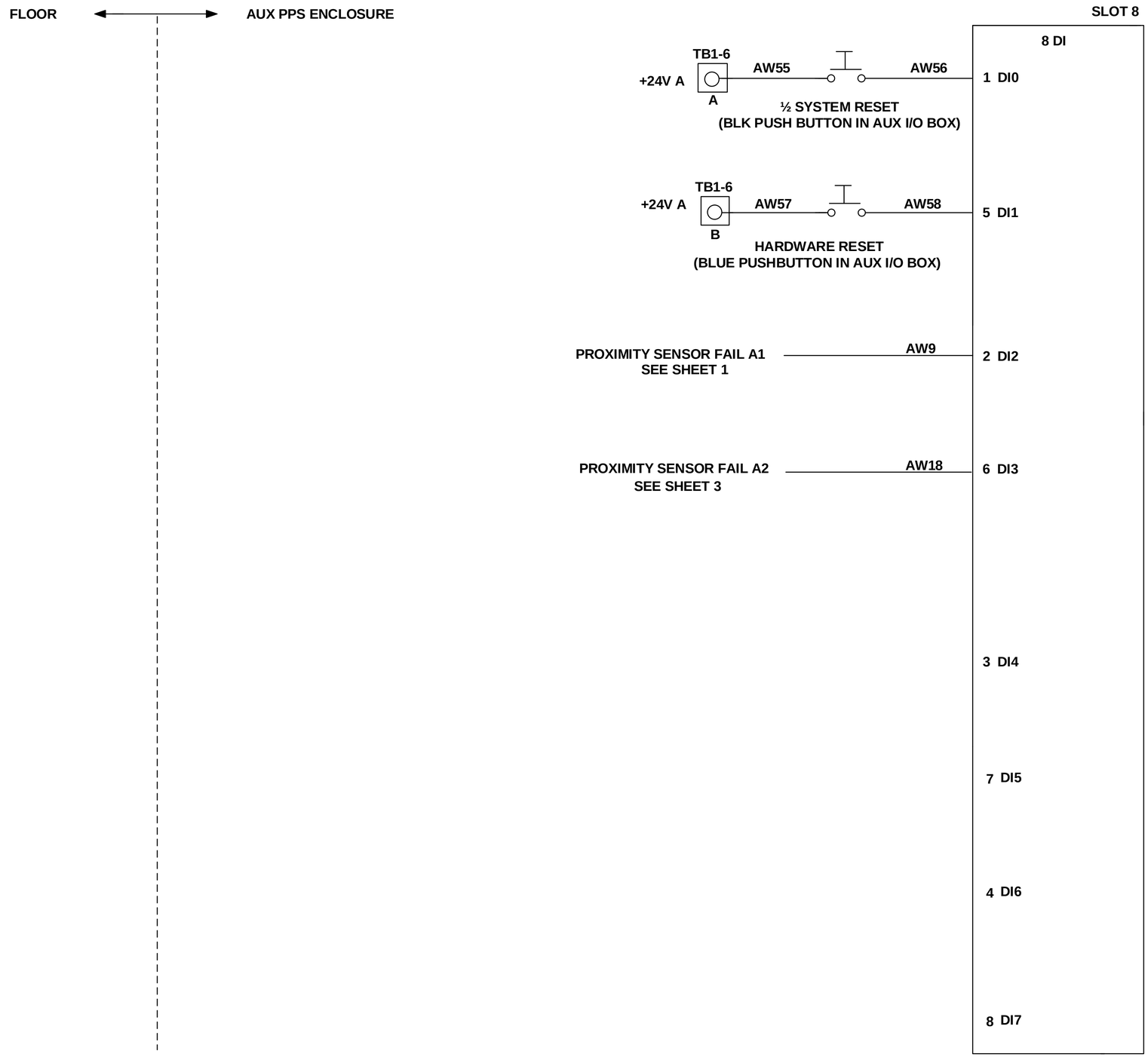


**A**

| LT-EL-BL-EI | LT-EL-BL-EI-PPS-1070-91 | B |
|---|---|---|
| DRAWING DIRECTORY | DRAWING NUMBER | REV |

COMPUTER REPRODUCIBLE | SCALE: N/A | SHEET 9 OF 34

LT-EL-BL-EI-PPS-1070-91

| REV | DESCRIPTION | DATE | BY | CHECKED | APP |
|---|---|---|---|---|---|
| | SEE SHEET 1 | | | | |

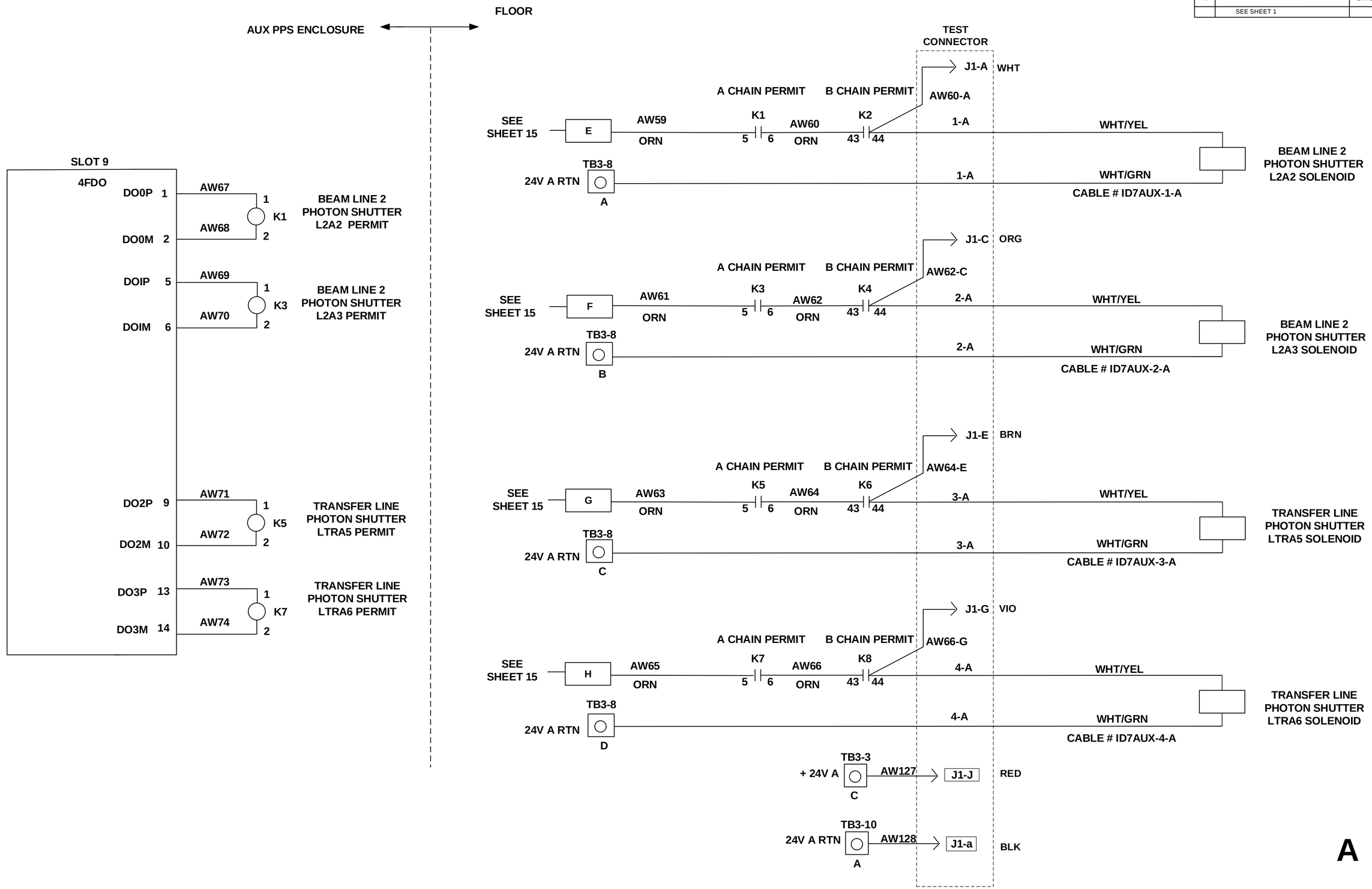


A

LT-EL-BL-EI-PPS-1070-90

| LT-EL-BL-EI (DRAWING DIRECTORY) | LT-EL-BL-EI-PPS-1070-90 (DRAWING NUMBER) | B (REV) |
|---|---|---|
| COMPUTER REPRODUCIBLE | SCALE: N/A | SHEET 10 OF 34 |

| REV | DESCRIPTION | DATE | BY | CHECKED | APP |
|---|---|---|---|---|---|
| | SEE SHEET 1 | | | | |

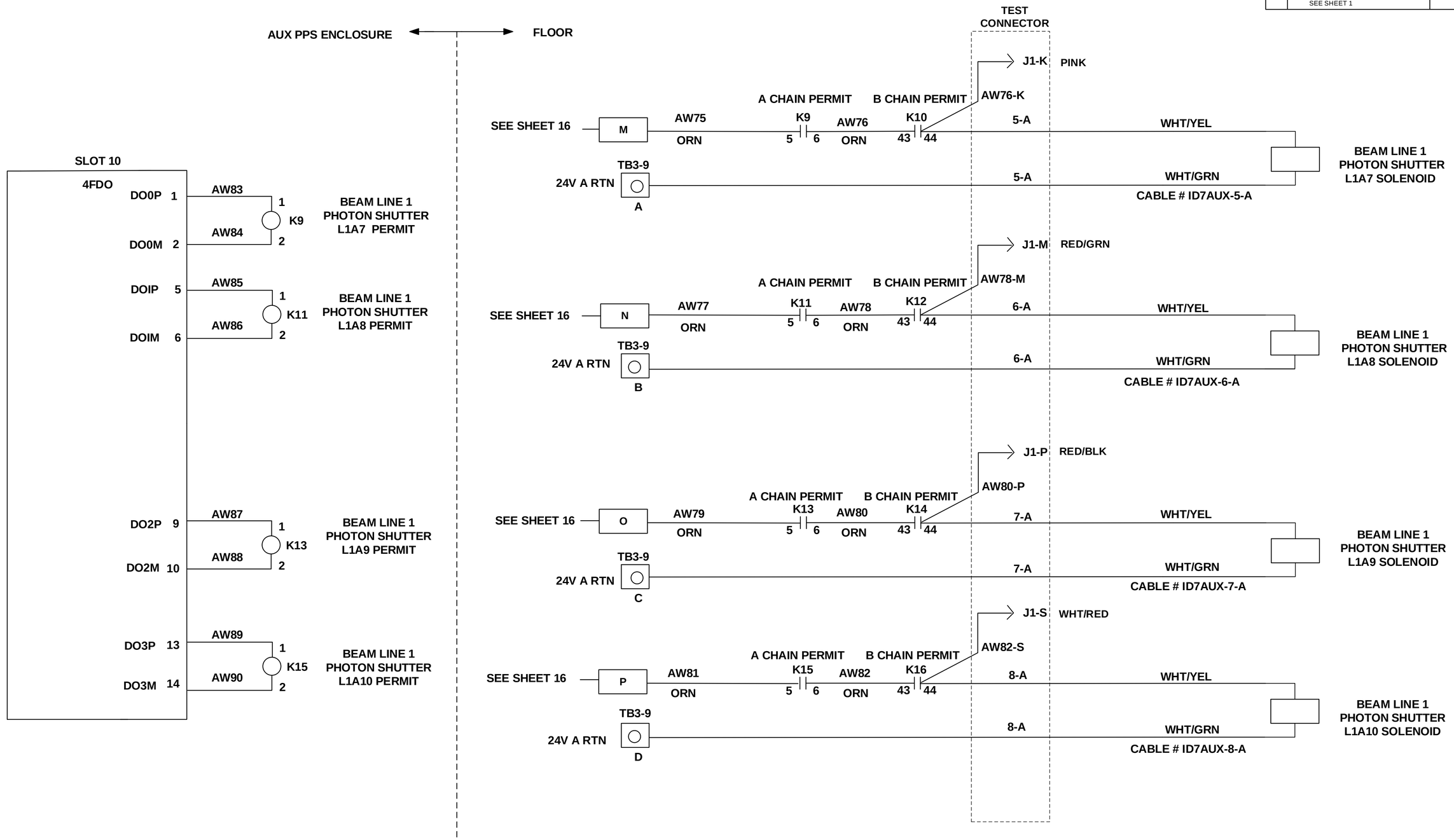


A

| LT-EL-BL-EI | LT-EL-BL-EI-PPS-1070-90 | B |
|---|---|---|
| DRAWING DIRECTORY | DRAWING NUMBER | REV |

COMPUTER REPRODUCIBLE | SCALE: N/A | SHEET 11 OF 34

LT-EL-BL-EI-PPS-1070-90

| REV | DESCRIPTION | DATE | BY | CHECKED | APP |
|---|---|---|---|---|---|
| | SEE SHEET 1 | | | | |

# BEAMLINE EPS

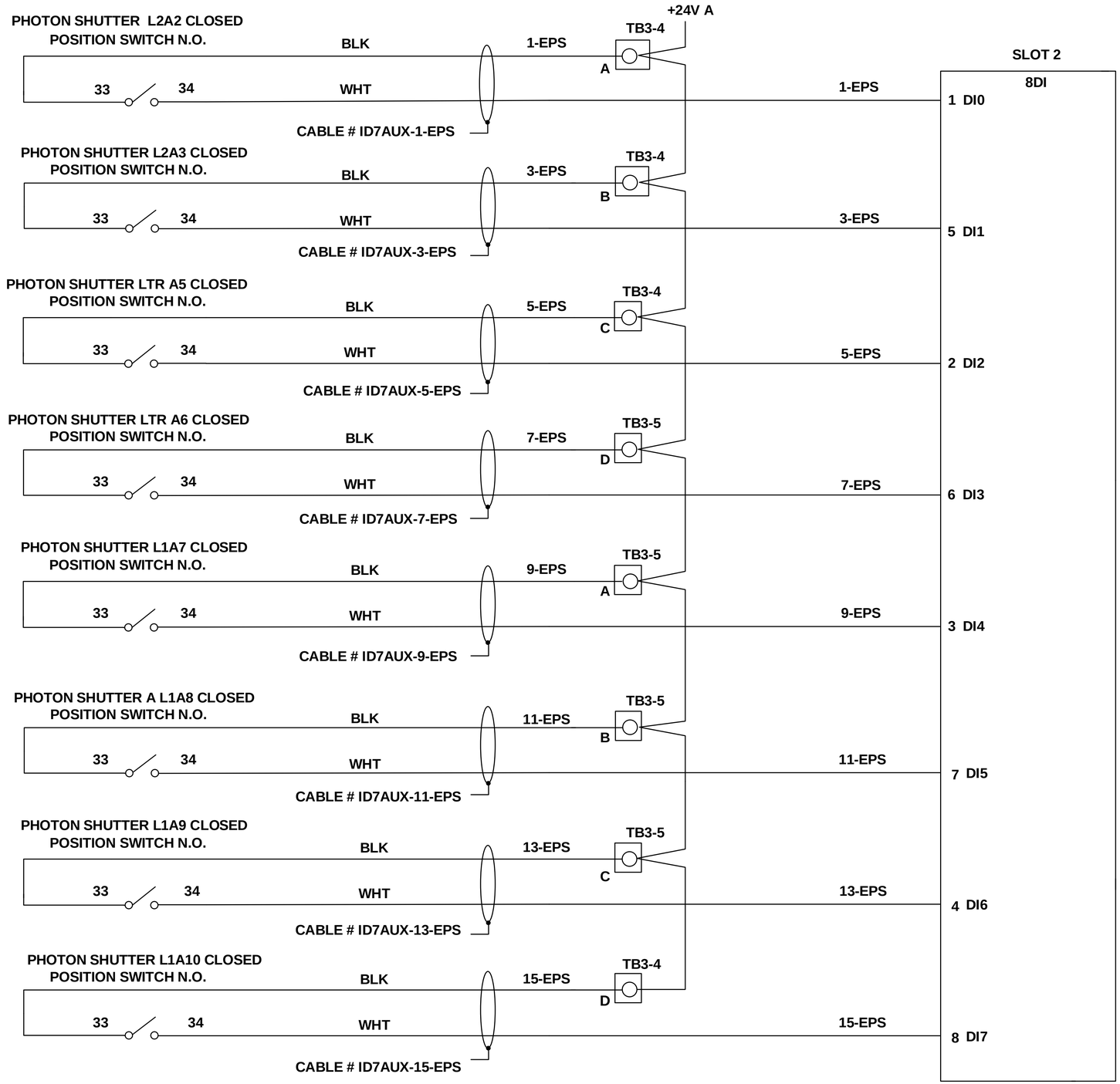


# EPS

LT-EL-BL-EI-PPS-1070-90

| LT-EL-BL-EI (DRAWING DIRECTORY) | LT-EL-BL-EI-PPS-1070-90 (DRAWING NUMBER) | B (REV) |
|---|---|---|
| COMPUTER REPRODUCIBLE | SCALE: N/A | SHEET 12 OF 34 |

| REV | DESCRIPTION | DATE | BY | CHECKED | APP |
|---|---|---|---|---|---|
| | SEE SHEET 1 | | | | |

# BEAMLINE EPS

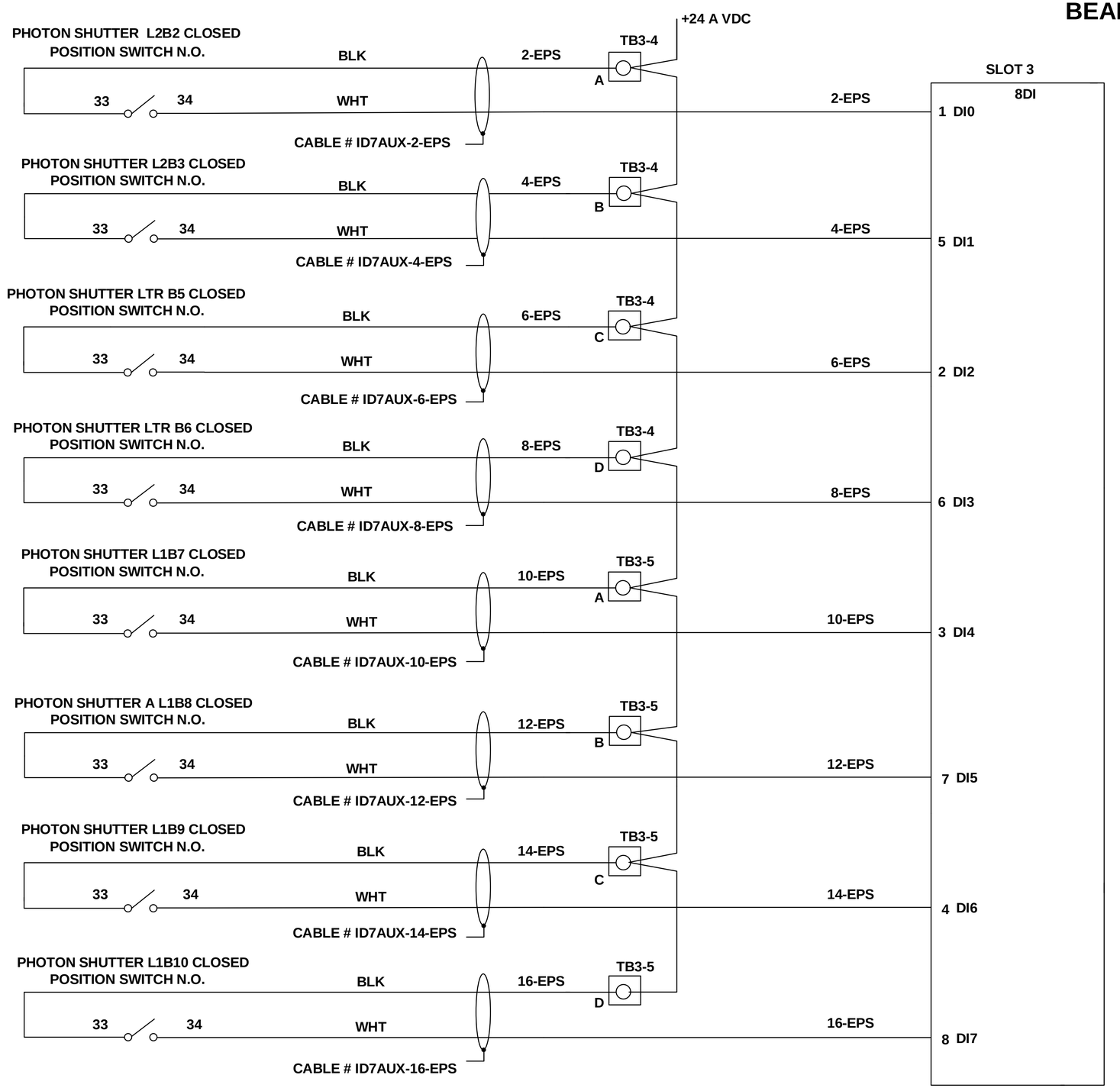


# EPS

LT-EL-BL-EI-PPS-1070-90

| | | |
|---|---|---|
| LT-EL-BL-EI (DRAWING DIRECTORY) | LT-EL-BL-EI-PPS-1070-90 (DRAWING NUMBER) | B (REV) |
| COMPUTER REPRODUCIBLE | SCALE: N/A | SHEET 13 OF 34 |

| REV | DESCRIPTION | DATE | BY | CHECKED | APP |
|---|---|---|---|---|---|
| | SEE SHEET 1 | | | | |

# BEAMLINE EPS

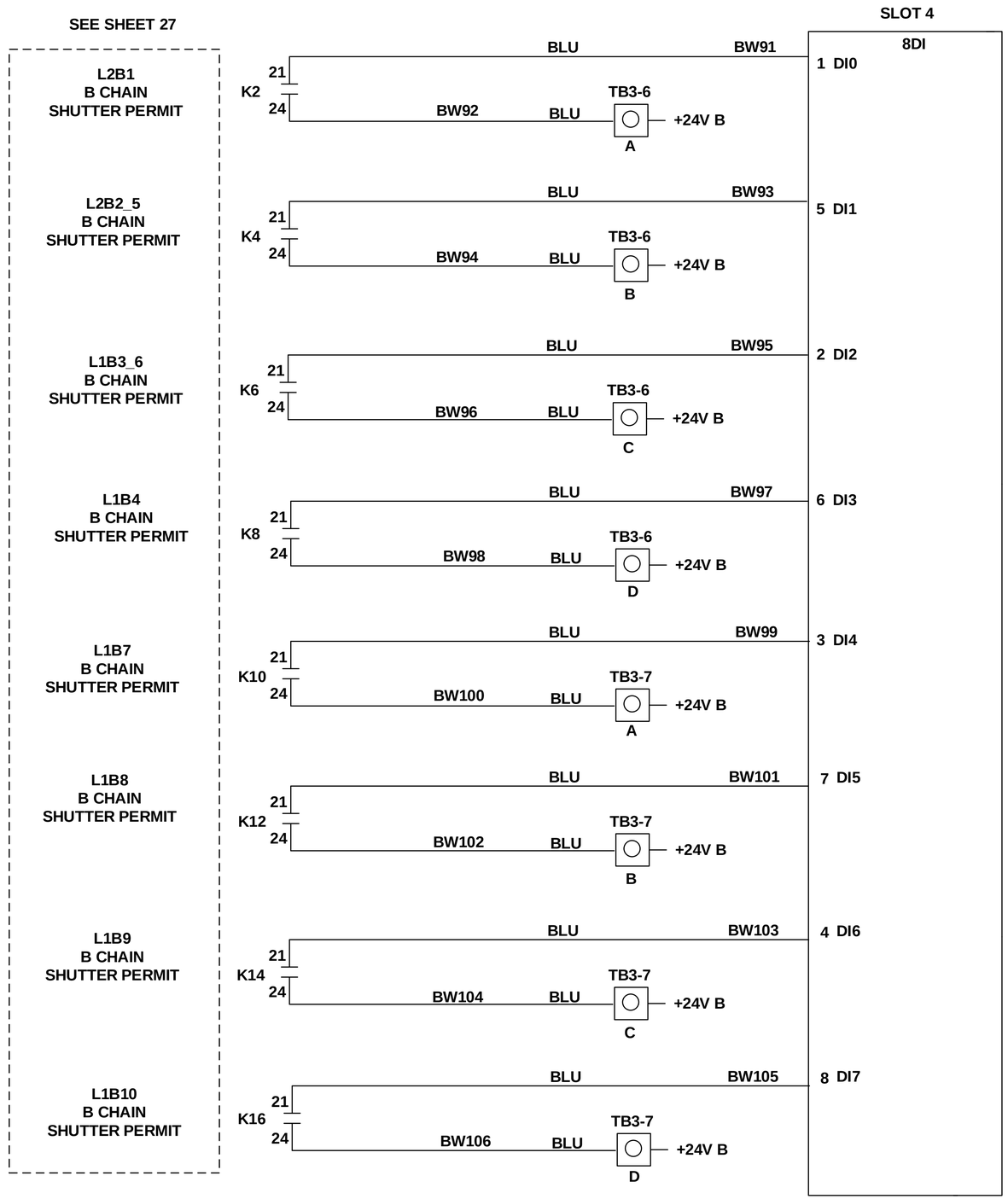


NOTES:

1.A CHAIN VACUUM PERMITS WILL BE SENT VIA DATA TRANSFER BETWEEN PPS AND C CHAIN.

2. B CHAIN AUX WATER PRMIT IS SENT FROM FOE, SEE LT-EL-BL-EI-PPS-1070-91, PAGE 19 & 31.

# EPS

LT-EL-BL-EI-PPS-1070-90

| LT-EL-BL-EI (DRAWING DIRECTORY) | LT-EL-BL-EI-PPS-1070-90 (DRAWING NUMBER) | B (REV) |
|---|---|---|
| COMPUTER REPRODUCIBLE | SCALE: N/A | SHEET 14 OF 34 |

| REV | DESCRIPTION | DATE | BY | CHECKED | APP |
|---|---|---|---|---|---|
| | SEE SHEET 1 | | | | |

# BEAMLINE EPS

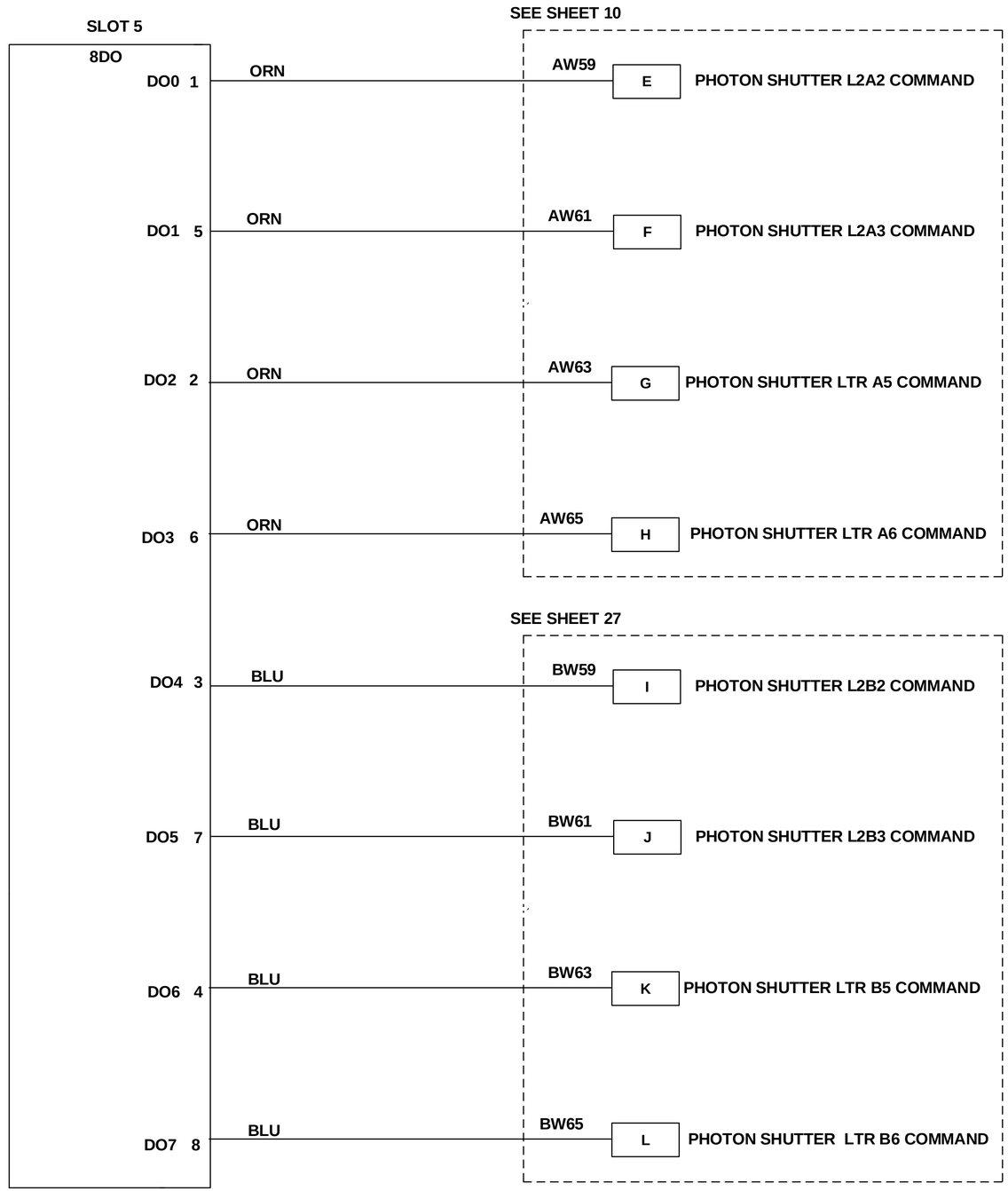


**NOTES:**

1. LTR_1 = Transfer Line 1
2. LTR_2 = Transfer Line 2

# EPS
# A

LT-EL-BL-EI-PPS-1070-90

| DRAWING DIRECTORY | DRAWING NUMBER | REV |
|---|---|---|
| LT-EL-BL-EI | LT-EL-BL-EI-PPS-1070-90 | B |

COMPUTER REPRODUCIBLE | SCALE: N/A | SHEET 15 OF 34

| REV | DESCRIPTION | DATE | BY | CHECKED | APP |
|---|---|---|---|---|---|
| | SEE SHEET 1 | | | | |

# BEAMLINE EPS

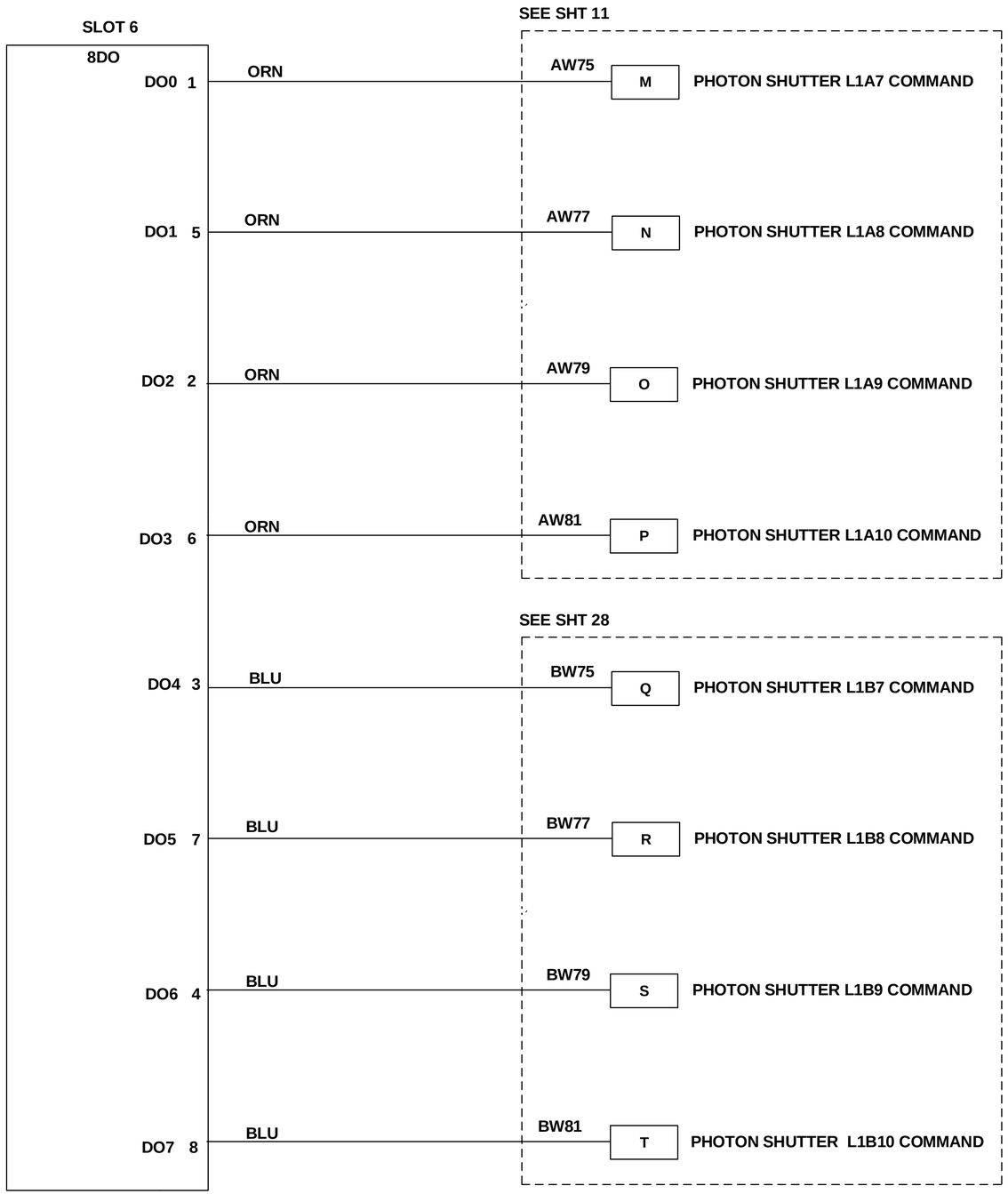


**EPS**
**A**

LT-EL-BL-EI-PPS-1070-90

| | | |
|---|---|---|
| LT-EL-BL-EI (DRAWING DIRECTORY) | LT-EL-BL-EI-PPS-1070-90 (DRAWING NUMBER) | B (REV) |
| COMPUTER REPRODUCIBLE | SCALE: N/A | SHEET 16 OF 34 |

| REV | DESCRIPTION | DATE | BY | CHECKED | APP |
|---|---|---|---|---|---|
| | SEE SHEET 1 | | | | |

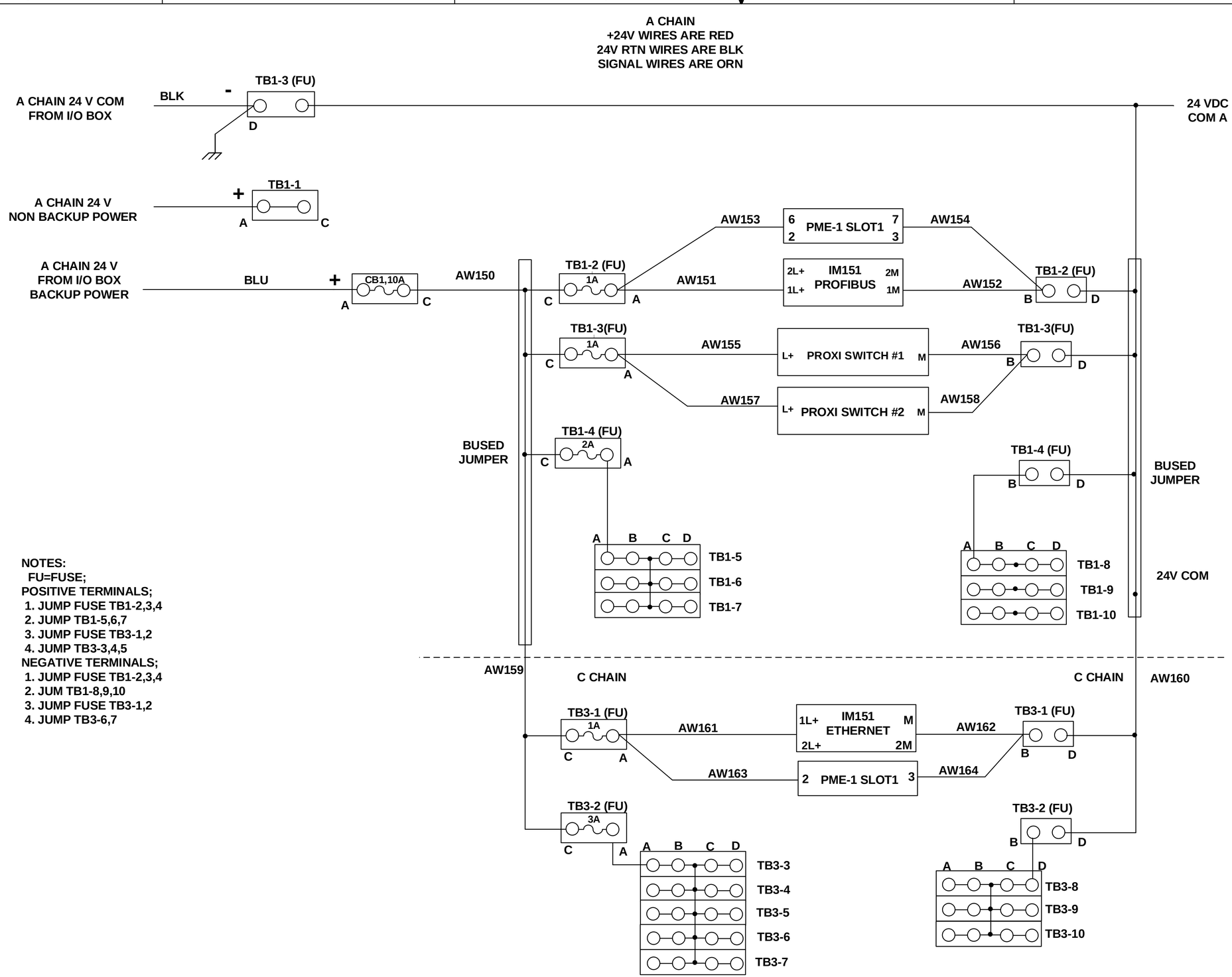


NOTES:
FU=FUSE;
POSITIVE TERMINALS;
1. JUMP FUSE TB1-2,3,4
2. JUMP TB1-5,6,7
3. JUMP FUSE TB3-1,2
4. JUMP TB3-3,4,5
NEGATIVE TERMINALS;
1. JUMP FUSE TB1-2,3,4
2. JUM TB1-8,9,10
3. JUMP FUSE TB3-1,2
4. JUMP TB3-6,7

# POWER DISTRIBUTION A

LT-EL-BL-EI-PPS-1070-91

| | | |
|---|---|---|
| LT-EL-BL-EI (DRAWING DIRECTORY) | LT-EL-BL-EI-PPS-1070-91 (DRAWING NUMBER) | B (REV) |
| COMPUTER REPRODUCIBLE | SCALE: N/A | SHEET 17 OF 34 |

| REV | DESCRIPTION | DATE | BY | CHECKED | APP |
|---|---|---|---|---|---|
| | SEE SHEET 1 | | | | |

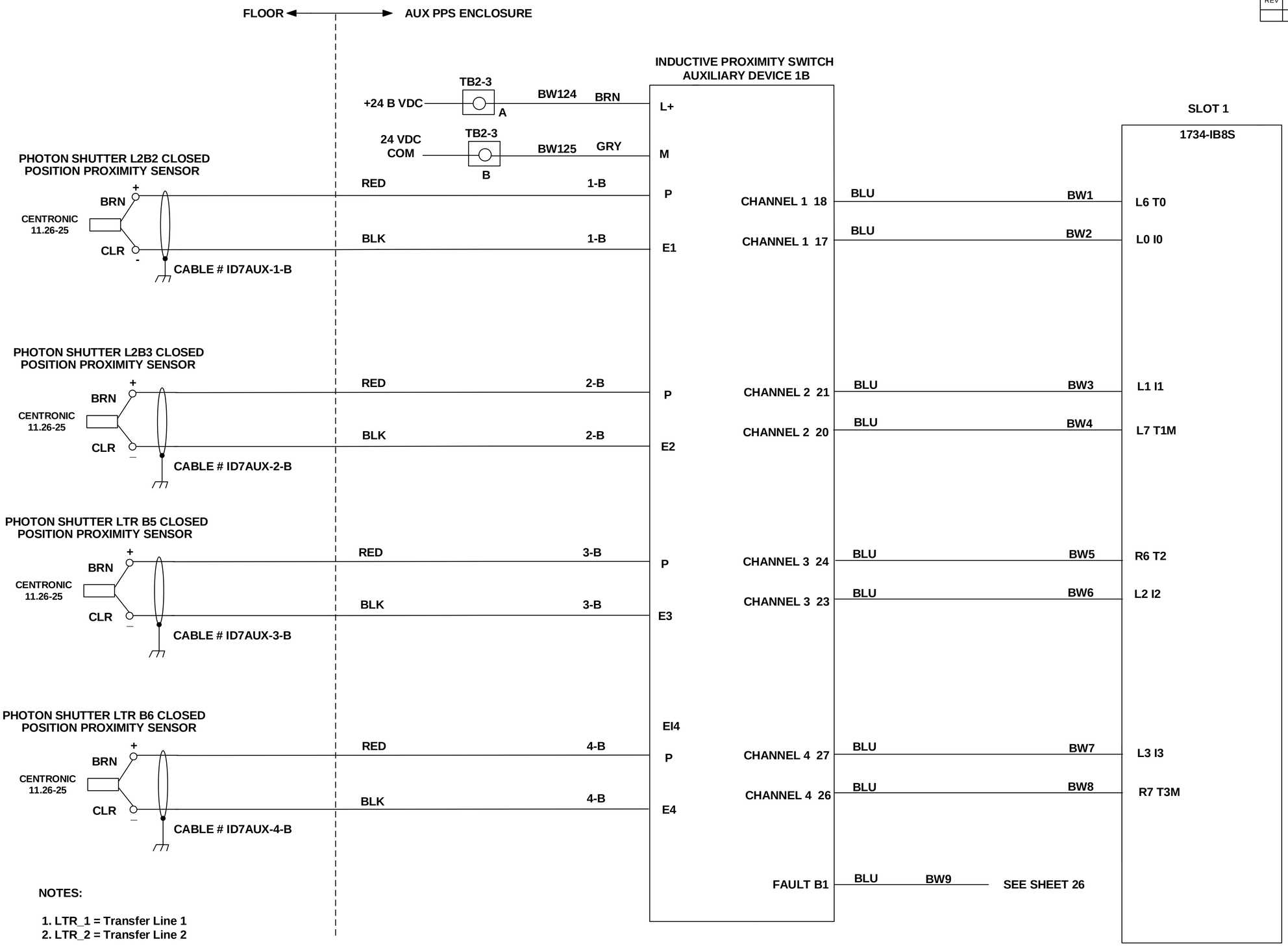


NOTES:

1. LTR_1 = Transfer Line 1
2. LTR_2 = Transfer Line 2

B

| | | |
|---|---|---|
| LT-EL-BL-EI (DRAWING DIRECTORY) | LT-EL-BL-EI-PPS-1070-90 (DRAWING NUMBER) | B (REV) |
| COMPUTER REPRODUCIBLE | SCALE: N/A | SHEET 18 OF 34 |

LT-EL-BL-EI-PPS-1070-90

| REV | DESCRIPTION | DATE | BY | CHECKED | APP |
|---|---|---|---|---|---|
| A | INITIAL RELEASE | 11/22/2016 | SEJ | JM | SB |

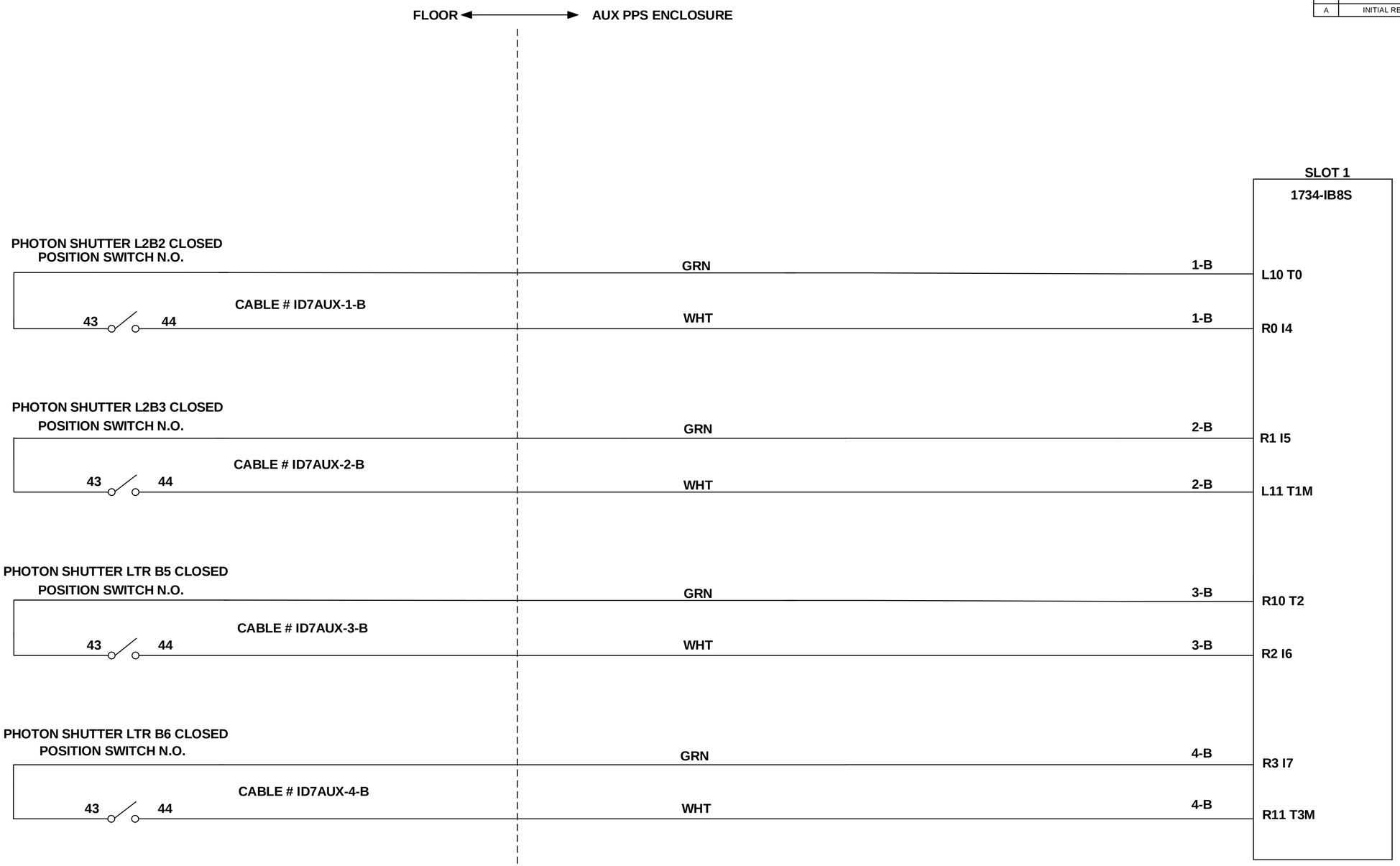


**NOTES:**

1. LTR_1 = Transfer Line 1
2. LTR_2 = Transfer Line 2

**B**

| LT-EL-BL-EI | LT-EL-BL-EI-PPS-1070-90 | B |
|---|---|---|
| DRAWING DIRECTORY | DRAWING NUMBER | REV |

COMPUTER REPRODUCIBLE | SCALE: N/A | SHEET 19 OF 34

LT-EL-BL-EI-PPS-1070-90

| REV | DESCRIPTION | DATE | BY | CHECKED | APP |
|---|---|---|---|---|---|
| | SEE SHEET 1 | | | | |

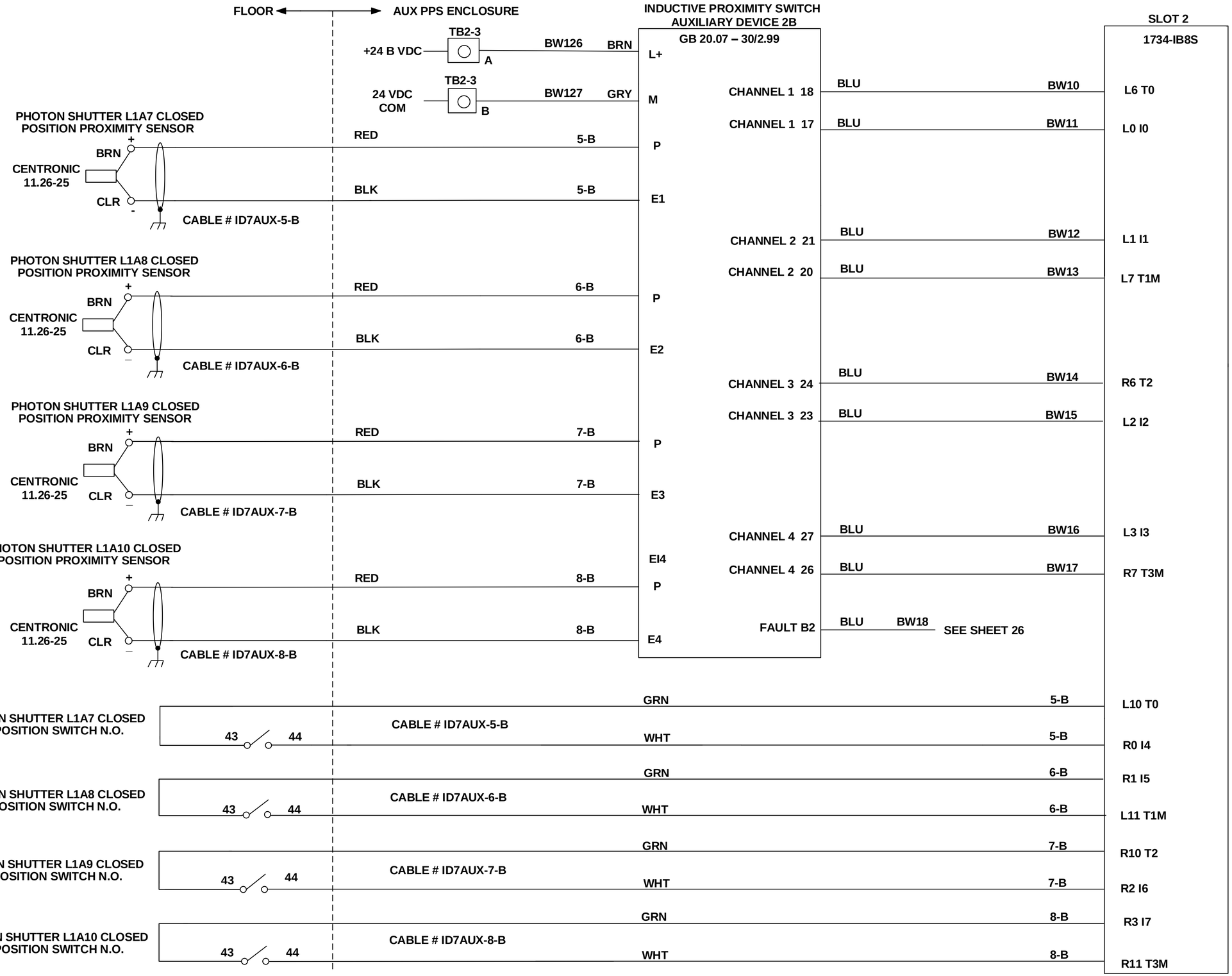


**B**

| LT-EL-BL-EI | LT-EL-BL-EI-PPS-1070-90 | B |
|---|---|---|
| DRAWING DIRECTORY | DRAWING NUMBER | REV |

COMPUTER REPRODUCIBLE | SCALE: N/A | SHEET 20 OF 34

LT-EL-BL-EI-PPS-1070-90

| REV | DESCRIPTION | DATE | BY | CHECKED | APP |
|---|---|---|---|---|---|
| | SEE SHEET 1 | | | | |

FLOOR ◄──► AUX PPS ENCLOSURE

SLOT 3

1734-IB8S

PHOTON SHUTTER L2B2 OPEN POSITION SWITCH N.O.

43 / 44 — CABLE # ID7AUX-1-B

WHT/RED 1-B — L6 T0

WHT/BLK 1-B — L0 T0

PHOTON SHUTTER L2B3 OPEN POSITION SWITCH N.O.

43 / 44 — CABLE # ID7AUX-2-B

WHT/RED 2-B — L1 I1

WHT/BLK 2-B — L7 T1M

PHOTON SHUTTER LTR B5 OPEN POSITION SWITCH N.O.

43 / 44 — CABLE # ID7AUX-3-B

WHT/RED 3-B — R6 T2

WHT/BLK 3-B — L2 I2

PHOTON SHUTTER LTR B6 OPEN POSITION SWITCH N.O.

43 / 44 — CABLE # ID7AUX-4-B

WHT/RED 4-B — L3 I3

WHT/BLK 4-B — R7 T3M

PHOTON SHUTTER L1B7 OPEN POSITION SWITCH N.O.

43 / 44 — CABLE # ID7AUX-5-B

WHT/RED 5-B — L10 T0

WHT/BLK 5-B — R0 I4

PHOTON SHUTTER L1B8 OPEN POSITION SWITCH N.O.

43 / 44 — CABLE # ID7AUX-6-B

WHT/RED 6-B — R1 I5

WHT/BLK 6-B — L11 T1M

PHOTON SHUTTER L1B9 OPEN POSITION SWITCH N.O.

43 / 44 — CABLE # ID7AUX-7-B

WHT/RED 7-B — R10 T2

WHT/BLK 7-B — R2 I6

PHOTON SHUTTER L1B10 OPEN POSITION SWITCH N.O.

43 / 44 — CABLE # ID7AUX-8-B

WHT/RED 8-B — R3 I7

WHT/BLK 8-B — R11 T3M

NOTES:

1. LTR_1 = Transfer Line 1
2. LTR_2 = Transfer Line 2

**B**

LT-EL-BL-EI-PPS-1070-90

| DRAWING DIRECTORY | DRAWING NUMBER | REV |
|---|---|---|
| LT-EL-BL-EI | LT-EL-BL-EI-PPS-1070-90 | B |

COMPUTER REPRODUCIBLE | SCALE: N/A | SHEET 21 OF 34

| REV | DESCRIPTION | DATE | BY | CHECKED | APP |
|---|---|---|---|---|---|
| | SEE SHEET 1 | | | | |

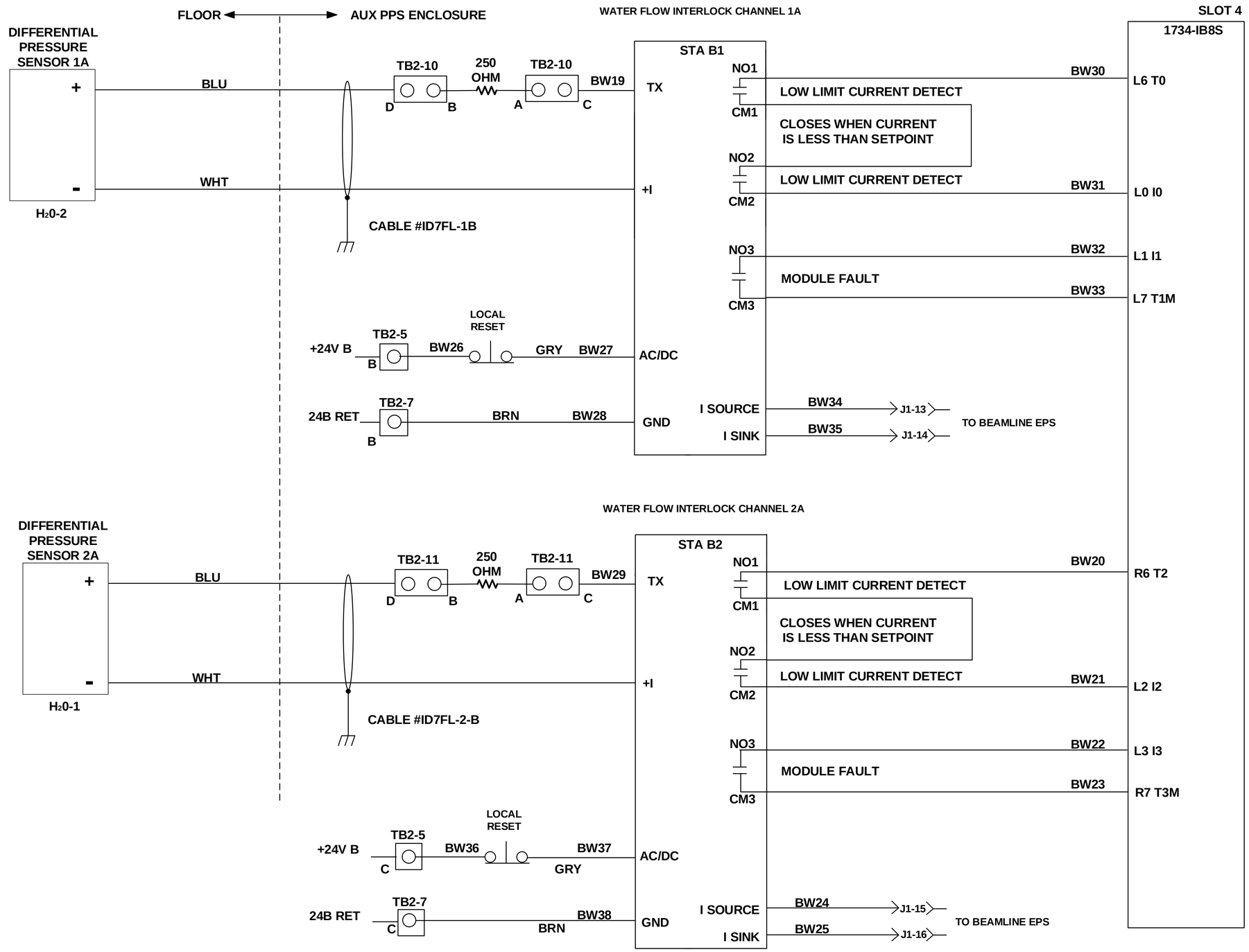


| STA DEVICE PARAMETER CONFIGURATION | | |
|---|---|---|
| DEVICE NAME / LOCATION: | STA_AUX B1 ID7 | |
| MODEL : | STA/HLPRG/3PRG/24DC/-AO[DIN] | |
| INPUT | | |
| Measurement Type: | Current | |
| Input Range: | Zero: 4.0 mA, Full: 20 mA | |
| Filter Settings: | 60 Hz | |
| Broken wire: | Enable | |
| TRIMMING | Disable | |
| SCALING | Zero: 0.0, Full: 2.61 GPM | |
| DISPLAY | | |
| Display Source: | Process Variable (PV) | |
| Precision: | Auto | |
| ALARMS | ALARM 1 | ALARM 2 |
| Mode: | Low Trip | Hi Trip |
| Latching: | Off | Off |
| Trip point: | 0.5 GPM | 0.0 GPM |
| Dead Band: | 0.0 GPM | 0.0 GPM |
| Delay: | 0 s | 0 s |
| ANALOG OUTPUT | | |
| Mode: | Current | |
| Fail mode: | Fail Low | |
| AO Range: | Zero: 4.0, Full: 20.0 mA | |
| Damping: | Disable (0.0 s) | |

| STA DEVICE PARAMETER CONFIGURATION | | |
|---|---|---|
| DEVICE NAME / LOCATION: | STA_AUX B2 ID7 | |
| MODEL : | STA/HLPRG/3PRG/24DC/-AO[DIN] | |
| INPUT | | |
| Measurement Type: | Current | |
| Input Range: | Zero: 4.0 mA, Full: 20 mA | |
| Filter Settings: | 60 Hz | |
| Broken wire: | Enable | |
| TRIMMING | Disable | |
| SCALING | Zero: 0.0, Full: 1.5 GPM | |
| DISPLAY | | |
| Display Source: | Process Variable (PV) | |
| Precision: | Auto | |
| ALARMS | ALARM 1 | ALARM 2 |
| Mode: | Low Trip | Hi Trip |
| Latching: | Off | Off |
| Trip point: | 0.6 GPM | 0.0 GPM |
| Dead Band: | 0.0 GPM | 0.0 GPM |
| Delay: | 0 s | 0 s |
| ANALOG OUTPUT | | |
| Mode: | Current | |
| Fail mode: | Fail Low | |
| AO Range: | Zero: 4.0, Full: 20.0 mA | |
| Damping: | Disable (0.0 s) | |

**B**

LT-EL-BL-EI-PPS-1120-91

| LT-EL-BL-EI (DRAWING DIRECTORY) | LT-EL-BL-EI-PPS-1120-91 (DRAWING NUMBER) | B (REV) |
|---|---|---|
| COMPUTER REPRODUCABLE | SCALE: N/A | SHEET 22 OF 34 |

| REV | DESCRIPTION | DATE | BY | CHECKED | APP |
|---|---|---|---|---|---|
| | SEE SHEET 1 | | | | |

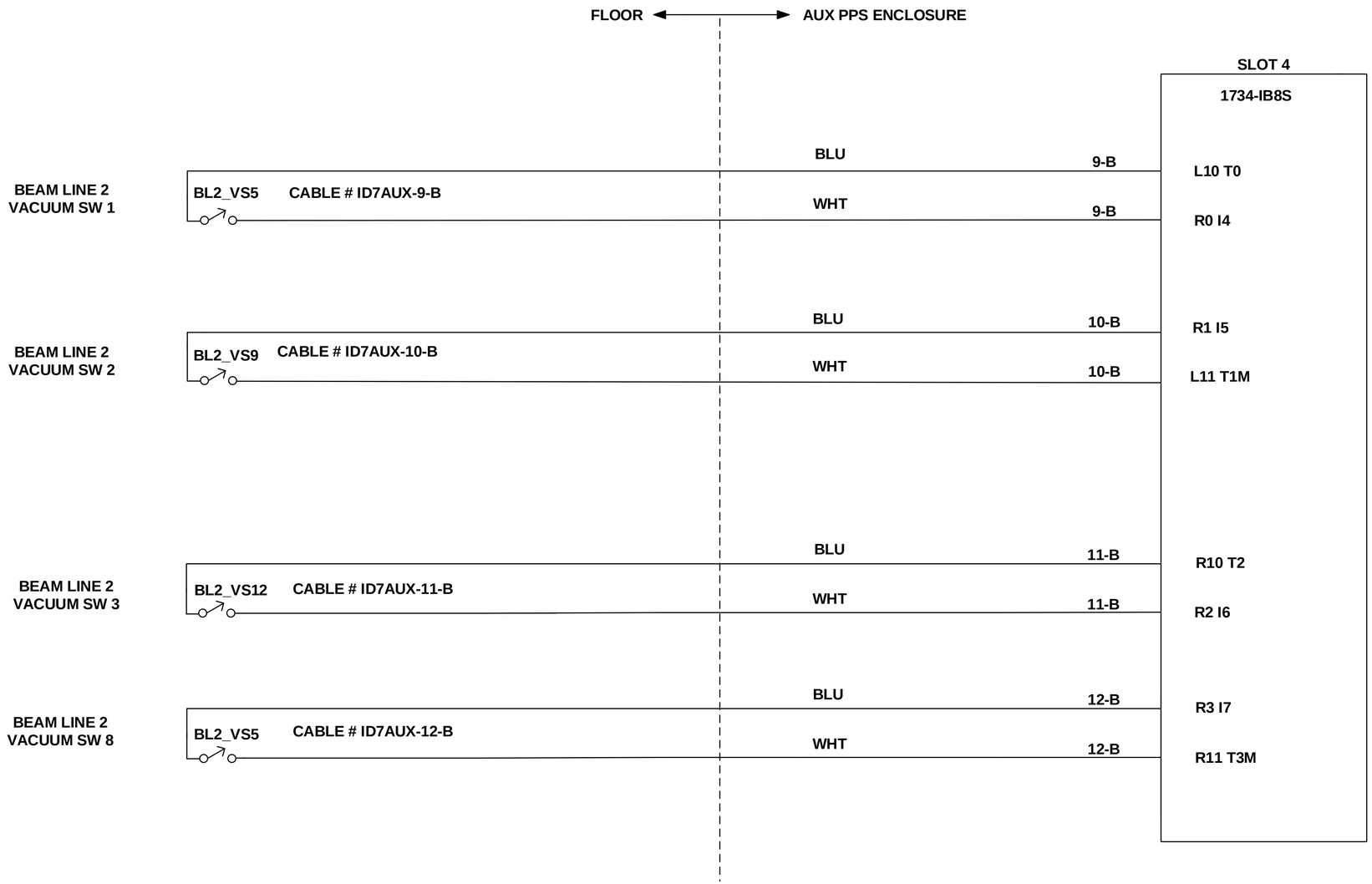


**NOTES:**

1. VACUUM SWITCHES ARE CLOSED WHEN BEAMLINE IS SAFE.

LT-EL-BL-EI-PPS-1070-91

**B**

| LT-EL-BL-EI (DRAWING DIRECTORY) | LT-EL-BL-EI-PPS-1070-90 (DRAWING NUMBER) | B (REV) |
|---|---|---|
| COMPUTER REPRODUCIBLE | SCALE: N/A | SHEET 23 OF 34 |

| REV | DESCRIPTION | DATE | BY | CHECKED | APP |
|---|---|---|---|---|---|
| | SEE SHEET 1 | | | | |

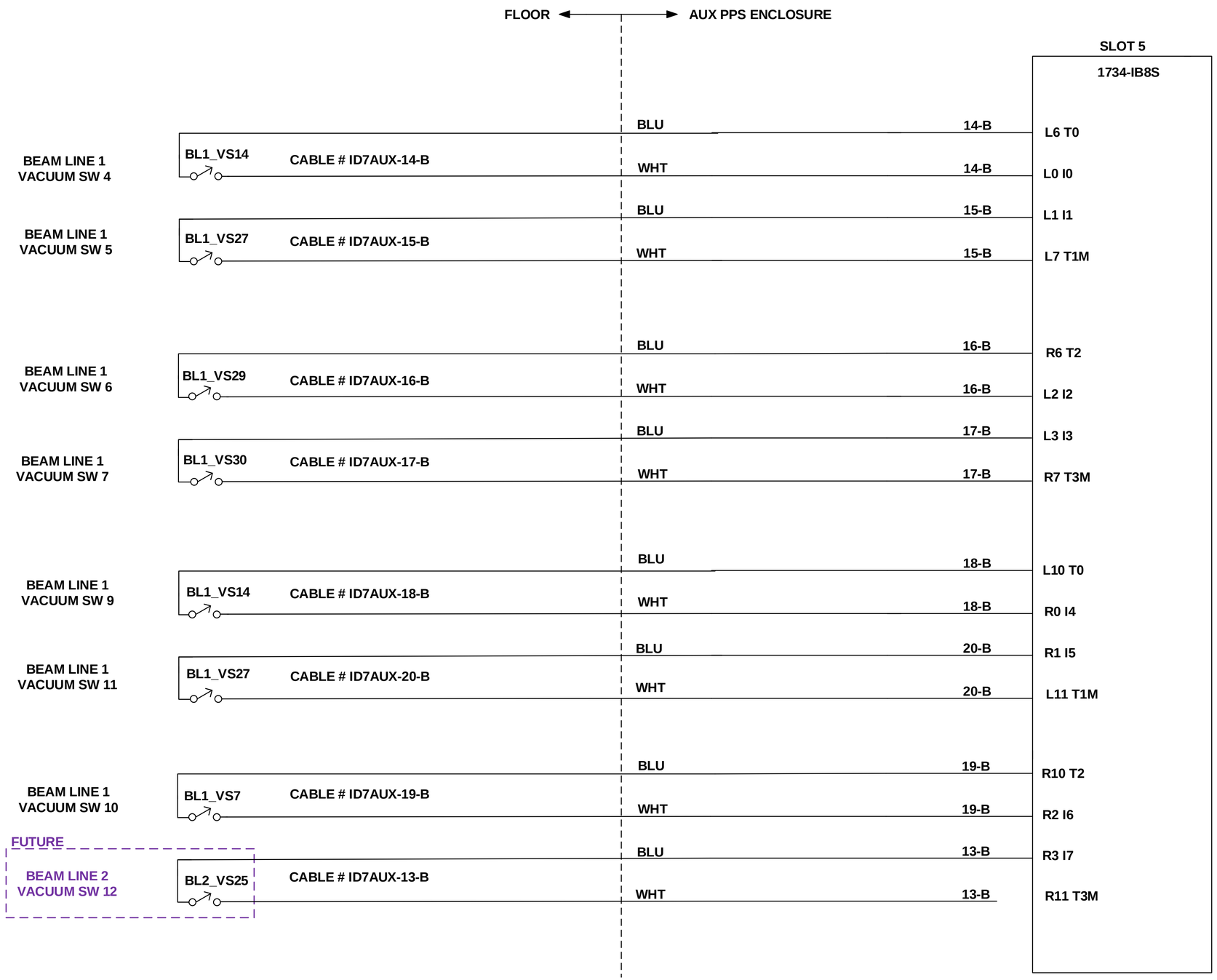


NOTES:
1. VACUUM SWITCHES ARE CLOSED WHEN BEAMLINE IS SAFE.

B

LT-EL-BL-EI-PPS-1070-90

| LT-EL-BL-EI (DRAWING DIRECTORY) | LT-EL-BL-EI-PPS-1070-90 (DRAWING NUMBER) | B (REV) |
|---|---|---|
| COMPUTER REPRODUCIBLE | SCALE: N/A | SHEET 24 OF 34 |

| REV | DESCRIPTION | DATE | BY | CHECKED | APP |
|---|---|---|---|---|---|
| | SEE SHEET 1 | | | | |

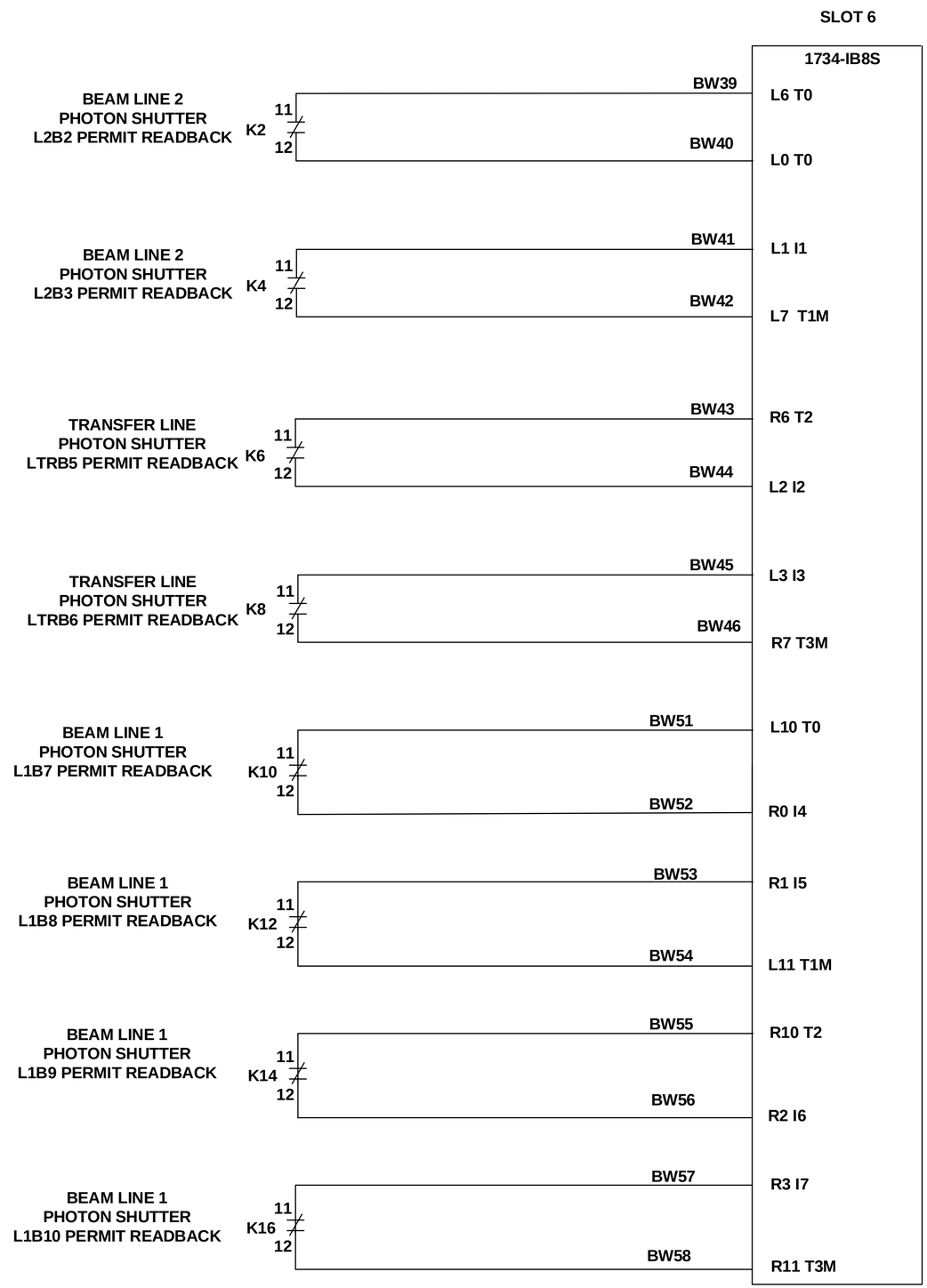


**B**

LT-EL-BL-EI-PPS-1070-90

| | | |
|---|---|---|
| LT-EL-BL-EI (DRAWING DIRECTORY) | LT-EL-BL-EI-PPS-1070-90 (DRAWING NUMBER) | B (REV) |
| COMPUTER REPRODUCIBLE | SCALE: N/A | SHEET 25 OF 34 |

| REV | DESCRIPTION | DATE | BY | CHECKED | APP |
|---|---|---|---|---|---|
| | SEE SHEET 1 | | | | |

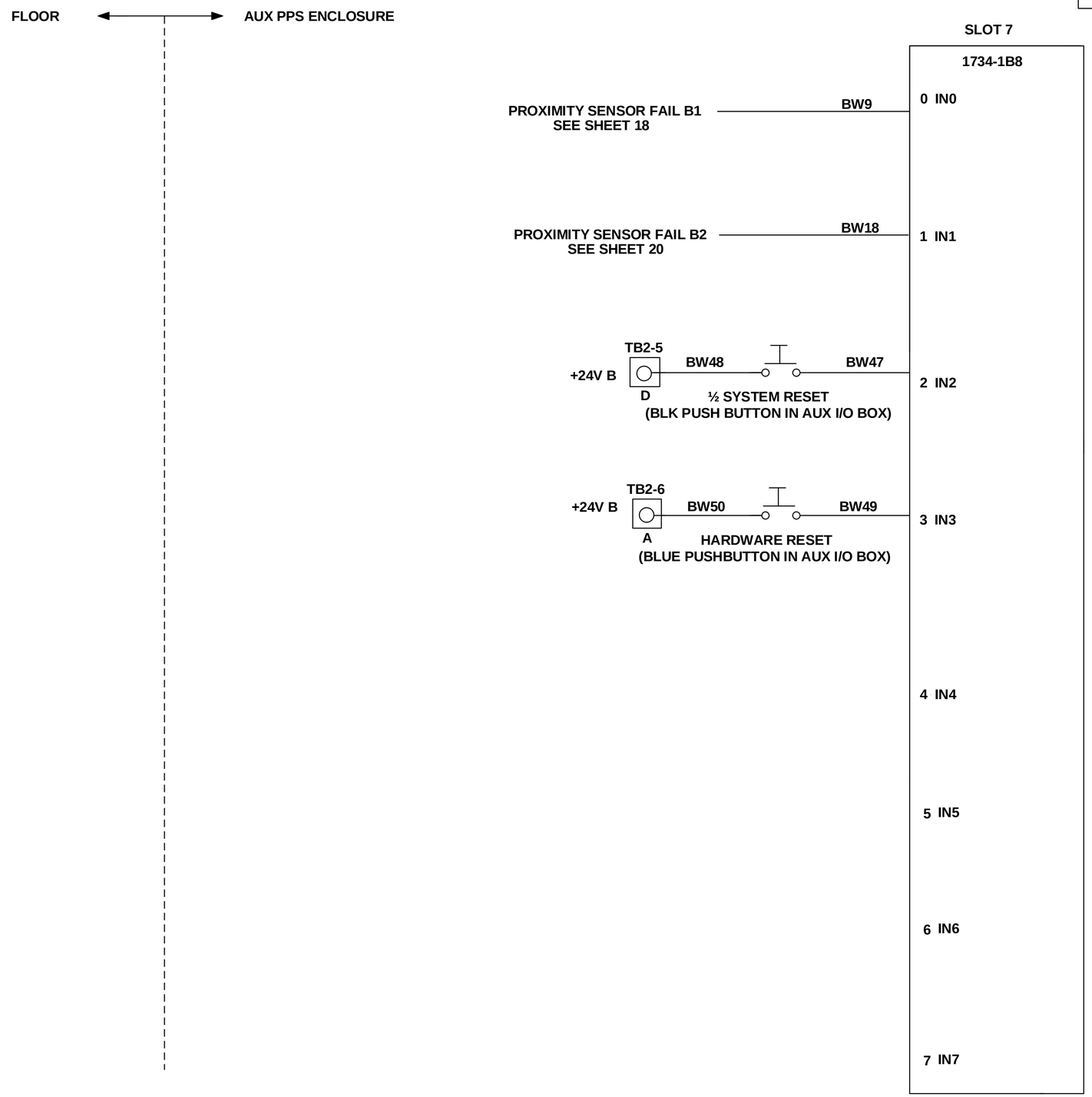


B

| | | |
|---|---|---|
| LT-EL-BL-EI<br>DRAWING DIRECTORY | LT-EL-BL-EI-PPS-1070-91<br>DRAWING NUMBER | B<br>REV |
| COMPUTER REPRODUCIBLE | SCALE: N/A | SHEET 26 OF 35 |

LT-EL-BL-EI-PPS-1070-91

| REV | DESCRIPTION | DATE | BY | CHECKED | APP |
|---|---|---|---|---|---|
| | SEE SHEET 1 | | | | |

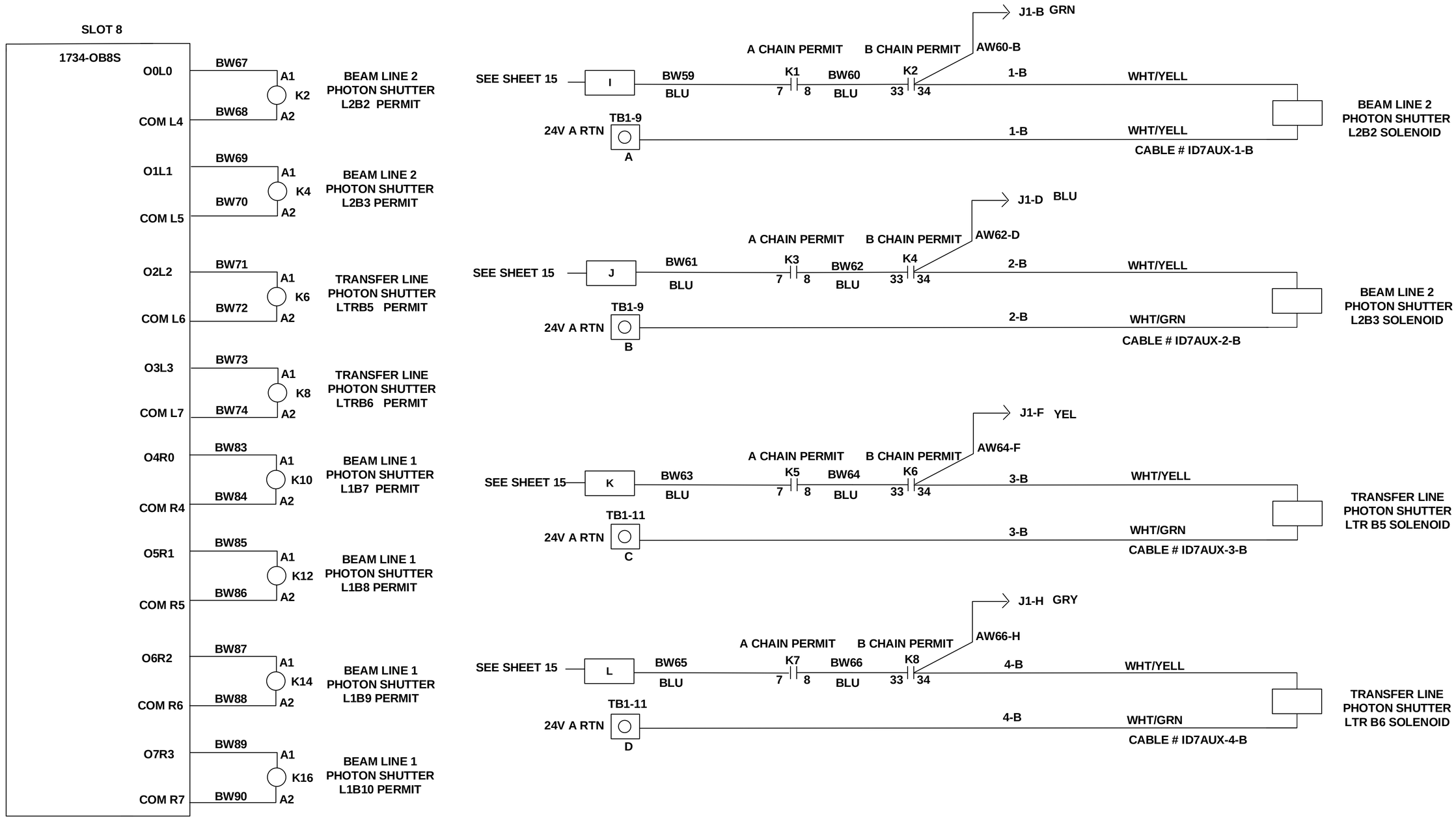


**B**

| LT-EL-BL-EI | LT-EL-BL-EI-PPS-1070-90 | B |
|---|---|---|
| DRAWING DIRECTORY | DRAWING NUMBER | REV |

COMPUTER REPRODUCIBLE | SCALE: N/A | SHEET 27 OF 34

LT-EL-BL-EI-PPS-1070-90

| REV | DESCRIPTION | DATE | BY | CHECKED | APP |
|---|---|---|---|---|---|
| | SEE SHEET 1 | | | | |

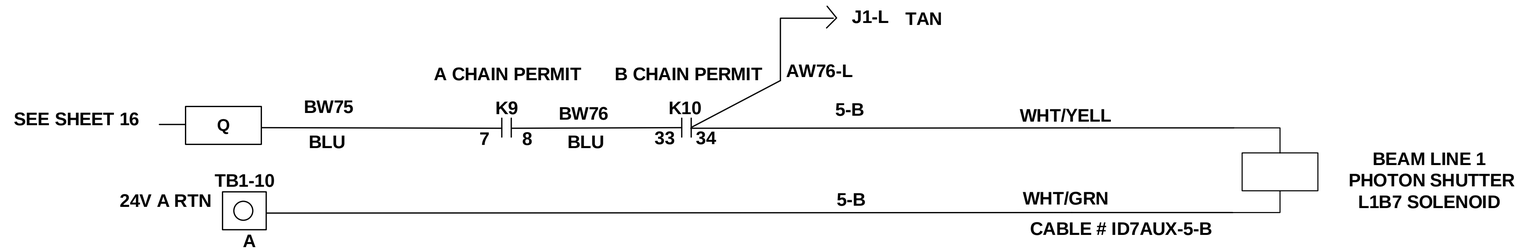


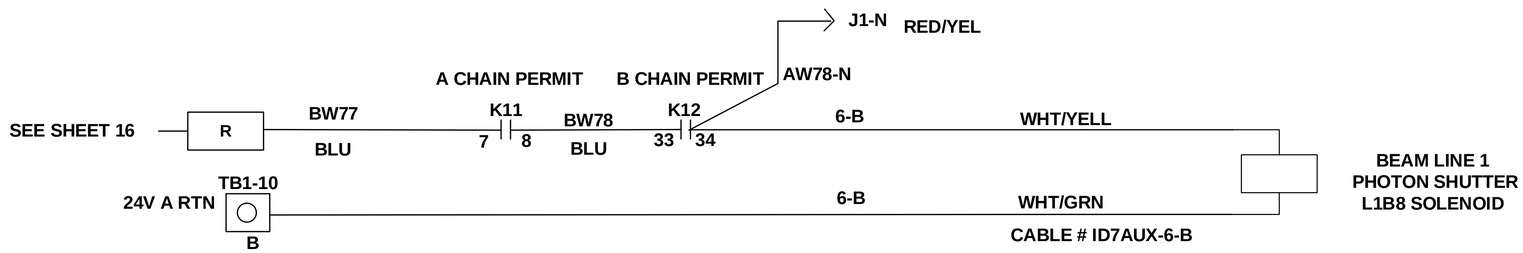


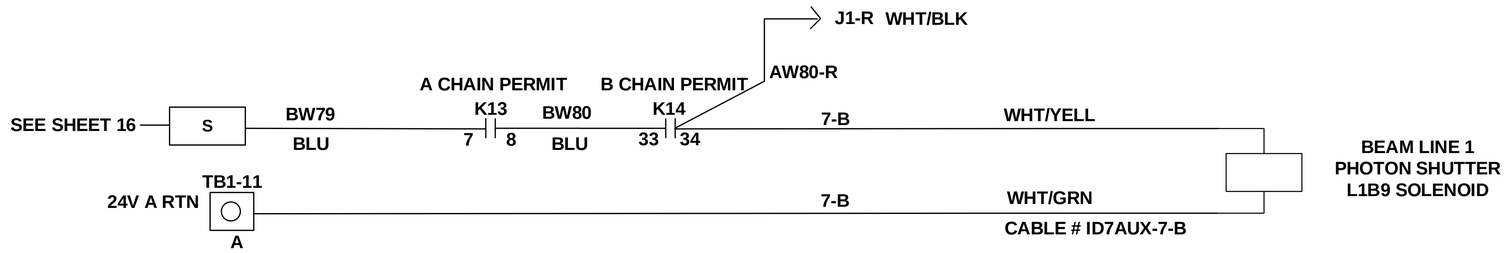


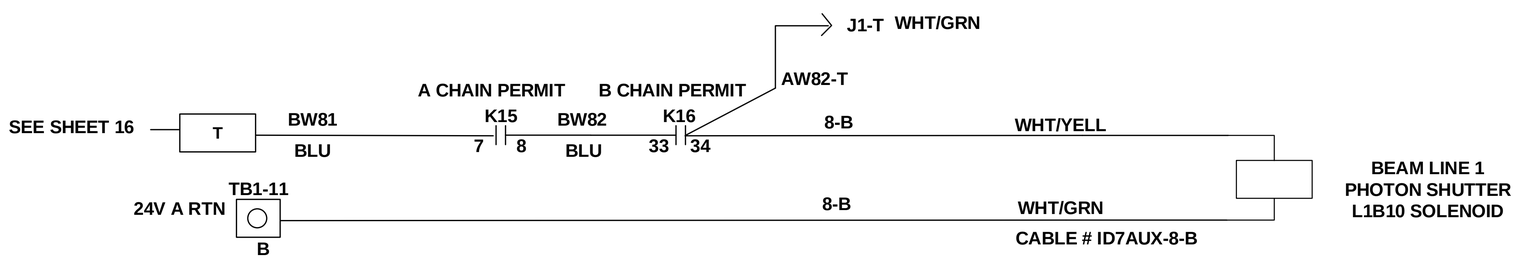


**B**

| LT-EL-BL-EI (DRAWING DIRECTORY) | LT-EL-BL-EI-PPS-1070-90 (DRAWING NUMBER) | B (REV) |
|---|---|---|
| COMPUTER REPRODUCIBLE | SCALE: N/A | SHEET 28 OF 34 |

LT-EL-BL-EI-PPS-1070-90

| REV | DESCRIPTION | DATE | BY | CHECKED | APP |
|---|---|---|---|---|---|
| | SEE SHEET 1 | | | | |

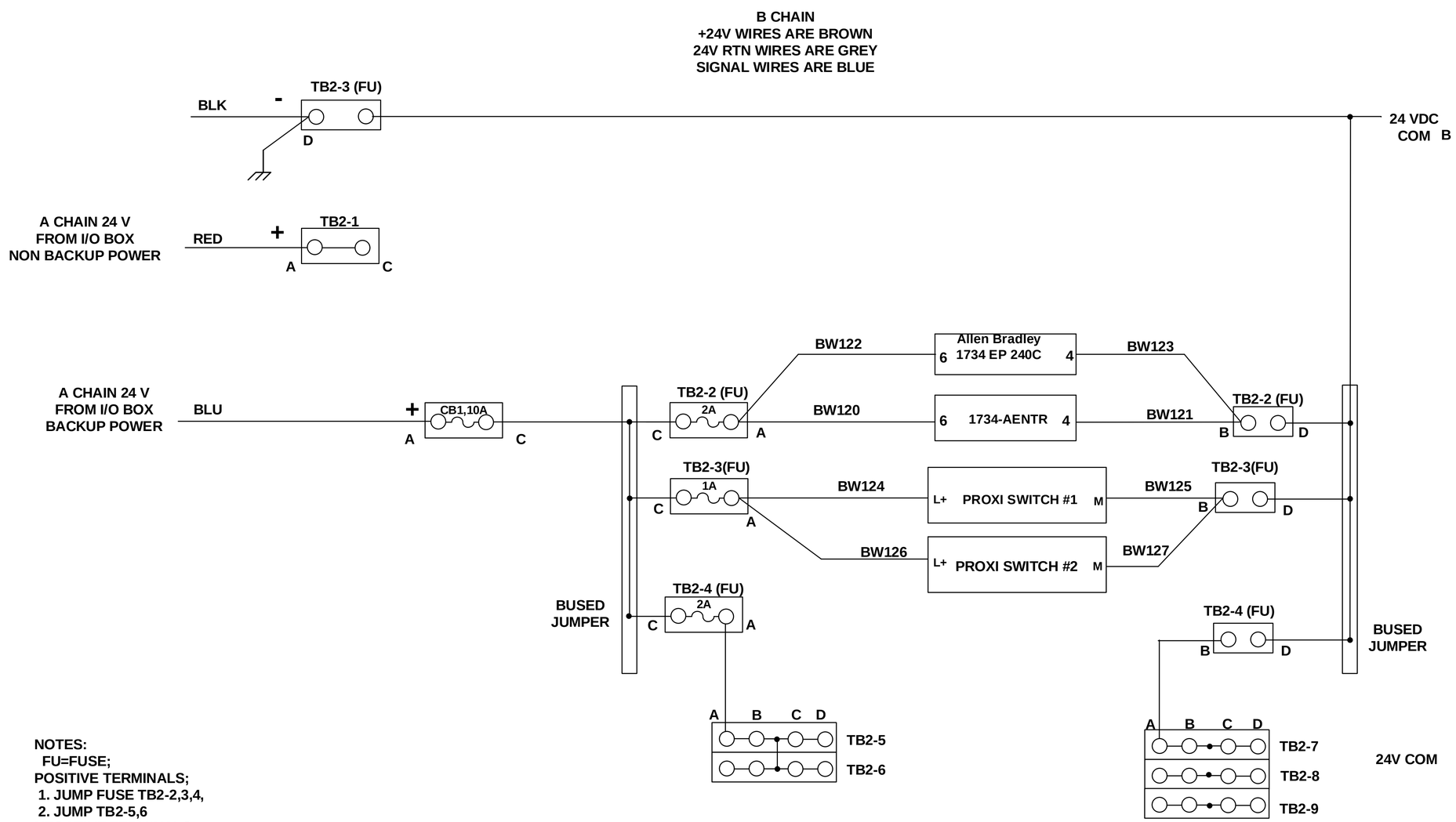


NOTES:
FU=FUSE;
POSITIVE TERMINALS;
1. JUMP FUSE TB2-2,3,4,
2. JUMP TB2-5,6
NEGATIVE TERMINALS;
1. JUMP FUSE TB2-2,3,4

# POWER DISTRIBUTION B

| LT-EL-BL-EI | LT-EL-BL-EI-PPS-1070-91 | B |
|---|---|---|
| DRAWING DIRECTORY | DRAWING NUMBER | REV |

COMPUTER REPRODUCIBLE | SCALE: N/A | SHEET 29 OF 34

LT-EL-BL-EI-PPS-1070-91

| REV | DESCRIPTION | DATE | BY | CHECKED | APP |
|---|---|---|---|---|---|
| | SEE SHEET 1 | | | | |

# A CHAIN

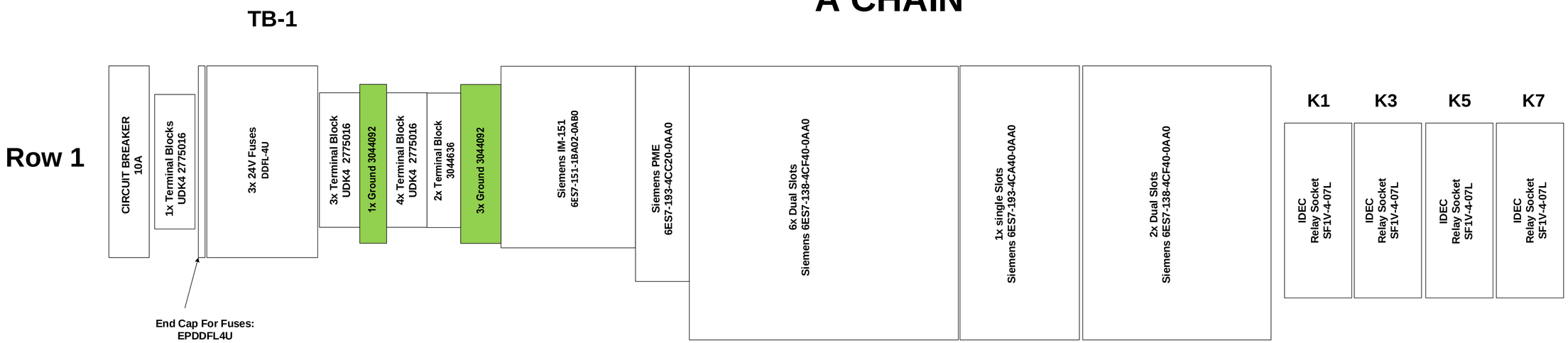


# B CHAIN

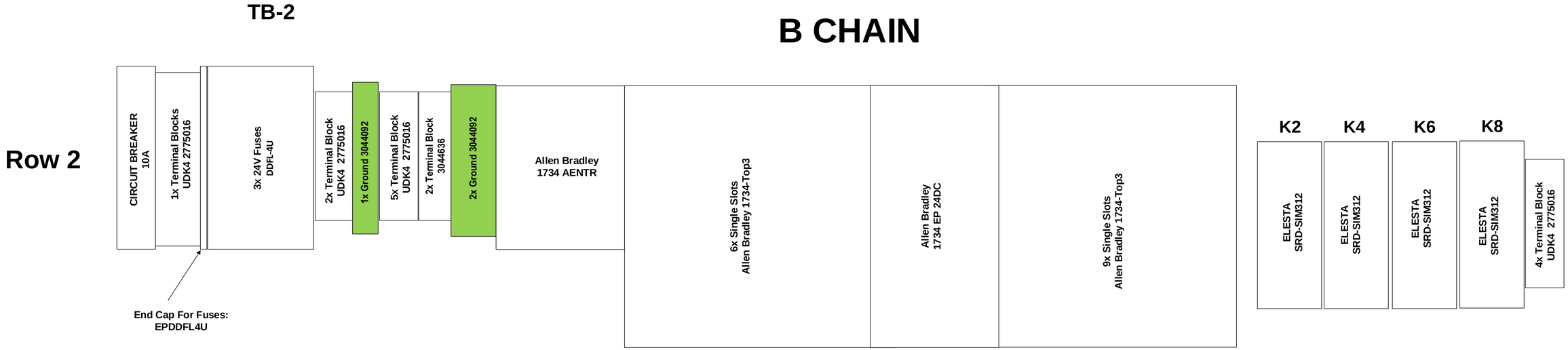


LT-EL-BL-EI-PPS-1070-90

| LT-EL-BL-EI (DRAWING DIRECTORY) | LT-EL-BL-EI-PPS-1070-90 (DRAWING NUMBER) | B (REV) |
|---|---|---|
| COMPUTER REPRODUCIBLE | SCALE: N/A | SHEET 30 OF 34 |

| REV | DESCRIPTION | DATE | BY | CHECKED | APP |
|---|---|---|---|---|---|
| | SEE SHEET 1 | | | | |

# A CHAIN

## A CHAIN

## B CHAIN

**Row 3**

| K9 | K11 | K13 | K15 | INDUCTIVE PROXIMITY SWITCH AUXILIARY DEVICE 1 | INDUCTIVE PROXIMITY SWITCH AUXILIARY DEVICE 2 | STA A1 | STA A2 | K10 | K12 | K14 | K16 |
|---|---|---|---|---|---|---|---|---|---|---|---|
| IDEC Relay Socket SF1V-4-07L | IDEC Relay Socket SF1V-4-07L | IDEC Relay Socket SF1V-4-07L | IDEC Relay Socket SF1V-4-07L | KLASCHKA ZSS4/a00ca-1.62 | KLASCHKA ZSS4/a00ca-1.62 | Thermocouple Safety Trip Alarm-Moore: STA/HLPRG/3PRG/24DC-AO | Thermocouple Safety Trip Alarm-Moore: STA/HLPRG/3PRG/24DC-AO | ELESTA SRD-SIM312 | ELESTA SRD-SIM312 | ELESTA SRD-SIM312 | ELESTA SRD-SIM312 |

3x Ground#3044092

# B CHAIN

## TB-3

## C CHAIN

**Row 4**

| 2x 24V Fuses DDFL-4U | 5x Terminal Blocks UDK4 2775016 | 1x Ground 3044092 | 3x Terminal Blocks UDK4 2775016 | 3x Ground 3044092 | Siemens IM 151-3PN 6ES7-151-3BA23-0AB0 | Siemens PME 6ES7-193-4CC20-0AA0 | 5x Single Slot Siemens 6ES7-193-4CA40-0AA0 | INDUCTIVE PROXIMITY SWITCH AUXILIARY DEVICE 1 | INDUCTIVE PROXIMITY SWITCH AUXILIARY DEVICE 2 | STA B1 | STA B2 |
|---|---|---|---|---|---|---|---|---|---|---|---|
| | | | | | | | | KLASCHKA ZSS4/a00ca-1.62 | KLASCHKA ZSS4/a00ca-1.62 | Thermocouple Safety Trip Alarm-Moore: STA/HLPRG/3PRG/24DC-AO | Thermocouple Safety Trip Alarm-Moore: STA/HLPRG/3PRG/24DC-AO |

End Cap For Fuses: EPDDFL4U

UDK4 End Cover 2775113

LT-EL-BL-EI-PPS-1070-90

| DRAWING DIRECTORY | DRAWING NUMBER | REV |
|---|---|---|
| LT-EL-BL-EI | LT-EL-BL-EI-PPS-1070-90 | B |

COMPUTER REPRODUCIBLE | SCALE: N/A | SHEET 31 OF 34

| REV | DESCRIPTION | DATE | BY | CHECKED | APP |
|---|---|---|---|---|---|
| | SEE SHEET 1 | | | | |

| | | | | |
|---|---|---|---|---|
| ROW 1: | | | | |
| 24V PWR TB | [11] | 1>3 [7] | [5] | |
| TB 1A | [5] | [6] | >4 [8] | >6 [7] |
| SLOT | MODULE | SOCKET | DESCRIPTION | VENDOR |
| | [5] | | | |
| | 6ES7-151-1BA02-0AB0 | N/A | IM 151 | SIEMENS |
| 1 | 6ES7-138-4CA50-0AB0 | 6ES7-193-4CC20-0AA0 | POWER MODULE PM-E | SIEMENS |
| 2 | 6ES7-138-4FA04-0AB0 | 6ES7-138-4CF40-0AA0 | 4/8 FDI 8 SAFE IN | SIEMENS |
| 3 | 6ES7-138-4FA04-0AB0 | 6ES7-138-4CF40-0AA0 | 4/8 FDI 8 SAFE IN | SIEMENS |
| 4 | 6ES7-138-4FA04-0AB0 | 6ES7-138-4CF40-0AA0 | 4/8 FDI 8 SAFE IN | SIEMENS |
| 5 | 6ES7-138-4FA04-0AB0 | 6ES7-138-4CF40-0AA0 | 4/8 FDI 8 SAFE IN | SIEMENS |
| 6 | 6ES7-138-4FA04-0AB0 | 6ES7-138-4CF40-0AA0 | 4/8 FDI 8 SAFE IN | SIEMENS |
| 7 | 6ES7-131-4BF00-0AB0 | 6ES7-193-4CA40-0AA0 | 8 DI | SIEMENS |
| 8 | 6ES7-131-4BF00-0AB0 | 6ES7-193-4CA40-0AA0 | 8 DI | SIEMENS |
| 9 | 6ES7-138-4FB03-0AB0 | 6ES7-138-4CF40-0AA0 | 4/8 FDO | SIEMENS |
| 10 | 6ES7-138-4FB03-0AB0 | 6ES7-138-4CF40-0AA0 | 4/8 FDO | SIEMENS |
| | | | | |
| K1 | RF 1V-3A1B-D24 | SF1V-4-07L | IDEC RELAY | IDEC |
| K3 | RF 1V-3A1B-D24 | SF1V-4-07L | IDEC RELAY | IDEC |
| K5 | RF 1V-3A1B-D24 | SF1V-4-07L | IDEC RELAY | IDEC |
| K7 | RF 1V-3A1B-D24 | SF1V-4-07L | IDEC RELAY | IDEC |
| K9 | RF 1V-3A1B-D24 | SF1V-4-07L | IDEC RELAY | IDEC |
| | | | | |
| ROW 2: | | | | |
| 24V PWR TB | [11] | 1>3 [7] | [5] | |
| TB 2B | [5] | [6] | ·3 [8] | 4 [7] |
| | | | | |
| SLOT | MODULE | SOCKET | DESCRIPTION | VENDOR |
| | 1734 AENTR | N/A | 2 PORT ETHERNET ADAPTER | AB |
| 1 | 1734-IB8S | 1734-TOP3 X2 | 8 INPUT SAFETY | AB |
| 2 | 1734-IB8S | 1734-TOP3 X2 | 8 INPUT SAFETY | AB |
| 3 | 1734-IB8S | 1734-TOP3 X2 | 8 INPUT SAFETY | AB |
| | 1734 EP24DC | N/A | DC EXPANSION PWR SUPPLY | AB |
| 4 | 1734-IB8S | 1734-TOP3 X2 | 8 INPUT SAFETY | AB |
| 5 | 1734-IB8S | 1734-TOP3 X2 | 8 INPUT SAFETY | AB |
| 6 | 1734-IB8S | 1734-TOP3 X2 | 8 INPUT SAFETY | AB |
| 7 | 1734-8BE | 1734-TOP3 | 9 INPUT STANDARD | AB |
| 8 | 1734-OB8E | 1734-TOP3 X2 | 8 OUTPUT SAFETY | AB |
| | | | | |
| K2 | SIM312 | SRD SIM4 | ELESTA SRD-SIM312 RELAY | ELESTA |
| K4 | SIM312 | SRD SIM4 | ELESTA SRD-SIM312 RELAY | ELESTA |
| K6 | SIM312 | SRD SIM4 | ELESTA SRD-SIM312 RELAY | ELESTA |
| K8 | SIM312 | SRD SIM4 | ELESTA SRD-SIM312 RELAY | ELESTA |
| | | | | |
| | | | | |

| REV | DESCRIPTION | DATE | BY | CHECKED | APP |
|---|---|---|---|---|---|
| | SEE SHEET 1 | | | | |

Paired part numbers are color coordinated.

| COLOR | PROD # | TYPE |
|---|---|---|
| [1] | 3044636 | Double-level terminal block - UTTB 2,5 |
| [2] | 3044092 | GROUND |
| [3] | 3047293 | End cover - D-UTTB 2,5/4 |
| [4] | 3047303 | Spacer plate - DP-UTTB 2,5/4 |
| [5] | 1201413 | End clamp - E/UK 1 |
| [6] | EPDDFL4U | End Plate; Term Blk; DIN Rail; Gray; |
| [7] | 3044542 | DIN Rail Terminal Blocks UT 2 5/4-QUATTRO |
| [8] | DDFL-4U | 24V FUSES |
| [9] | 3044076 | Feed-through terminal block - UT 2,5 |
| [10] | 3047028 | End cover - D-UT 2,5/10 |
| [11] | 3047170 | End cover - D-UT 2,5/4-QUATTRO |
| [12] | 3044102 | Feed-through terminal block - UT 4 |
| [13] | 2775016 | Feed-through terminal block - UDK 4 |
| [14] | KN-TL-14 | KONNECT IT 3 CIRCUIT TERMINAL BLOCK |
| [15] | KN-EC-TL | 3 CIRCUIT TERMINAL BLOCK COVER |
| [16] | CDL4U(E)DD2 | 99321 ALTECH DIODE TERMINAL BLOCK |
| [17] | EPCDL4U | ALTECH DIODE TB END COVER |
| [18] | 3044636 | Diode TB - UTTB 2,5 O-UL/UR-UL |

[1]

[7]

[13]

[2]

[8]

[14]

[3]

[9]

[15]

[4]

[10]

[16]

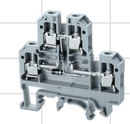

[5]

[11]

[17]

[6]

[12]

[18]

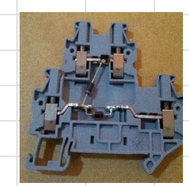

LT-EL-BL-EI-PPS-1070-90

| | | |
|---|---|---|
| LT-EL-BL-EI (DRAWING DIRECTORY) | LT-EL-BL-EI-PPS-1070-90 (DRAWING NUMBER) | B (REV) |
| COMPUTER REPRODUCIBLE | SCALE : N/A | SHEET 33 OF 34 |

| REV | DESCRIPTION | DATE | BY | CHECKED | APP |
|---|---|---|---|---|---|
| | SEE SHEET 1 | | | | |

## 7ID Auxiliary Box Cable List

| CABLE Num. | CHAIN | From LOCATION | To LOCATION | CONDUCTORS |
|---|---|---|---|---|
| ID7AUX-1-A | A | Aux. Box | Photon Shutter A L1A2 Proximity Sensor, open and closed switches/Solenoid | 8 |
| ID7AUX-1-B | B | Aux. Box | Photon Shutter B L1B2 Proximity Sensor, open and closed switches/Solenoid | 8 |
| ID7AUX-2-A | A | Aux. Box | Photon Shutter A L1A3 Proximity Sensor, open and closed switches/Solenoid | 8 |
| ID7AUX-2-B | B | Aux. Box | Photon Shutter B L1B3 Proximity Sensor, open and closed switches/Solenoid | 8 |
| ID7AUX-3-A | A | Aux. Box | Photon Shutter A L1A5 Proximity Sensor, open and closed switches/Solenoid | 8 |
| ID7AUX-3-B | B | Aux. Box | Photon Shutter B L1B5 Proximity Sensor, open and closed switches/Solenoid | 8 |
| ID7AUX-4-A | A | Aux. Box | Photon Shutter A L1A6 Proximity Sensor, open and closed switches/Solenoid | 8 |
| ID7AUX-4-B | B | Aux. Box | Photon Shutter B L1B6 Proximity Sensor, open and closed switches/Solenoid | 8 |
| ID7AUX-5-A | A | Aux. Box | Photon Shutter A L1A7 Proximity Sensor, open and closed switches/Solenoid | 8 |
| ID7AUX-5-B | B | Aux. Box | Photon Shutter B L1B7 Proximity Sensor, open and closed switches/Solenoid | 8 |
| ID7AUX-6-A | A | Aux. Box | Photon Shutter A L1A8 Proximity Sensor, open and closed switches/Solenoid | 8 |
| ID7AUX-6-B | B | Aux. Box | Photon Shutter B L1B8 Proximity Sensor, open and closed switches/Solenoid | 8 |
| ID7AUX-7-A | A | Aux. Box | Photon Shutter A L1A9 Proximity Sensor, open and closed switches/Solenoid | 8 |
| ID7AUX-7-B | B | Aux. Box | Photon Shutter B L1B9 Proximity Sensor, open and closed switches/Solenoid | 8 |
| ID7AUX-8-A | A | Aux. Box | Photon Shutter A L1A10 Proximity Sensor, open and closed switches/Solenoid | 8 |
| ID7AUX-8-B | B | Aux. Box | Photon Shutter B L1B10 Proximity Sensor, open and closed switches/Solenoid | 8 |
| ID7AUX-9-A | A | Aux. Box | A Chain Beam Line1 Vacuum Switch 1 | 2 |
| ID7AUX-9-B | B | Aux. Box | B Chain Beam Line1 Vacuum Switch 1 | 2 |
| ID7AUX-10-A | A | Aux. Box | A Chain Beam Line1 Vacuum Switch 2 | 2 |
| ID7AUX-10-B | B | Aux. Box | B Chain Beam Line1 Vacuum Switch 2 | 2 |
| ID7AUX-11-A | A | Aux. Box | A Chain Beam Line1 Vacuum Switch 3 | 2 |
| ID7AUX-11-B | B | Aux. Box | B Chain Beam Line1 Vacuum Switch 3 | 2 |
| ID7AUX-12-A | A | Aux. Box | A Chain Beam Line1 Vacuum Switch 8 | 2 |
| ID7AUX-12-B | B | Aux. Box | B Chain Beam Line1 Vacuum Switch 8 | 2 |
| ID7AUX-13-A | A | Aux. Box | A Chain Beam Line1 Vacuum Switch 12 | 2 |
| ID7AUX-13-B | B | Aux. Box | B Chain Beam Line1 Vacuum Switch 12 | 2 |
| ID7AUX-14-A | A | Aux. Box | A Chain Beam Line2 Vacuum Switch 4 | 2 |
| ID7AUX-14-B | B | Aux. Box | B Chain Beam Line2 Vacuum Switch 4 | 2 |
| ID7AUX-15-A | A | Aux. Box | A Chain Beam Line TR. Vacuum Switch 5 | 2 |
| ID7AUX-15-B | B | Aux. Box | B Chain Beam Line TR. Vacuum Switch 5 | 2 |
| ID7AUX-16-A | A | Aux. Box | A Chain Beam Line TR. Vacuum Switch 6 | 2 |
| ID7AUX-16-B | B | Aux. Box | B Chain Beam Line TR. Vacuum Switch 6 | 2 |
| ID7AUX-17-A | A | Aux. Box | A Chain Beam Line2 Vacuum Switch 7 | 2 |
| ID7AUX-17-B | B | Aux. Box | B Chain Beam Line2 Vacuum Switch 7 | 2 |
| ID7AUX-18-A | A | Aux. Box | A Chain Beam Line2 Vacuum Switch 9 | 2 |
| ID7AUX-18-B | B | Aux. Box | B Chain Beam Line2 Vacuum Switch 9 | 2 |
| ID7AUX-19-A | A | Aux. Box | A Chain Beam Line2 Vacuum Switch 10 | 2 |
| ID7AUX-19-B | B | Aux. Box | B Chain Beam Line2 Vacuum Switch 10 | 2 |
| ID7AUX-20-A | A | Aux. Box | A Chain Beam Line2 Vacuum Switch 11 | 2 |
| ID7AUX-20-B | B | Aux. Box | B Chain Beam Line2 Vacuum Switch 11 | 2 |
| | | | | |
| ID7FL-1-A | A | Aux. Box | Differential Pressure Sensor 2A | 2 |
| ID7FL-1-B | B | Aux. Box | Differential Pressure Sensor 2B | 2 |
| ID7FL-2-A | A | Aux. Box | Differential Pressure Sensor 1A | 2 |
| ID7FL-2-B | B | Aux. Box | Differential Pressure Sensor 1B | 2 |
| | | | | |
| | | | | |
| ID7AUX-1-EPS | EPS | Aux. Box | Photon Shutter L1A2 Closed&Open Position Switch_EPS | 4 |
| ID7AUX-2-EPS | EPS | Aux. Box | Photon Shutter L1B2 Closed&Open Position Switch_EPS | 4 |
| ID7AUX-3-EPS | EPS | Aux. Box | Photon Shutter L1A3 Closed&Open Position Switch_EPS | 4 |
| ID7AUX-4-EPS | EPS | Aux. Box | Photon Shutter L1B3 Closed&Open Position Switch_EPS | 4 |
| ID7AUX-5-EPS | EPS | Aux. Box | Photon Shutter LTRA5 Closed&Open Position Switch_EPS | 4 |
| ID7AUX-6-EPS | EPS | Aux. Box | Photon Shutter LTRB5 Closed&Open Position Switch_EPS | 4 |
| ID7AUX-7-EPS | EPS | Aux. Box | Photon Shutter LTRA6 Closed&Open Position Switch_EPS | 4 |
| ID7AUX-8-EPS | EPS | Aux. Box | Photon Shutter LTRB6 Closed&Open Position Switch_EPS | 4 |
| ID7AUX-9-EPS | EPS | Aux. Box | Photon Shutter L2A7 Closed&Open Position Switch_EPS | 4 |
| ID7AUX-10-EPS | EPS | Aux. Box | Photon Shutter L2B7 Closed&Open Position Switch_EPS | 4 |
| ID7AUX-11-EPS | EPS | Aux. Box | Photon Shutter L2A8 Closed&Open Position Switch_EPS | 4 |
| ID7AUX-12-EPS | EPS | Aux. Box | Photon Shutter L2B8 Closed&Open Position Switch_EPS | 4 |
| ID7AUX-13-EPS | EPS | Aux. Box | Photon Shutter L2A9 Closed&Open Position Switch_EPS | 4 |
| ID7AUX-14-EPS | EPS | Aux. Box | Photon Shutter L2B9 Closed&Open Position Switch_EPS | 4 |
| ID7AUX-15-EPS | EPS | Aux. Box | Photon Shutter L2A10 Closed&Open Position Switch_EPS | 4 |
| ID7AUX-16-EPS | EPS | Aux. Box | Photon Shutter L2B10 Closed&Open Position Switch_EPS | 4 |
| | | | | |
| | | | | |

LT-EL-BL-EI-PPS-1070-90

| LT-EL-BL-EI (DRAWING DIRECTORY) | LT-EL-BL-EI-PPS-1070-90 (DRAWING NUMBER) | B (REV) |
|---|---|---|
| COMPUTER REPRODUCIBLE | SCALE: N/A | SHEET 34 OF 34 |

| REV | DESCRIPTION | DATE | BY | CHECKED | APP |
|---|---|---|---|---|---|
| A | INITIAL RELEASE | 1/24/2018 | SEJ | JM | SB |
| B | REVISED PER ECN LT-ECN-019-2056 | 11/07/2018 | SEJ | JM | SB |

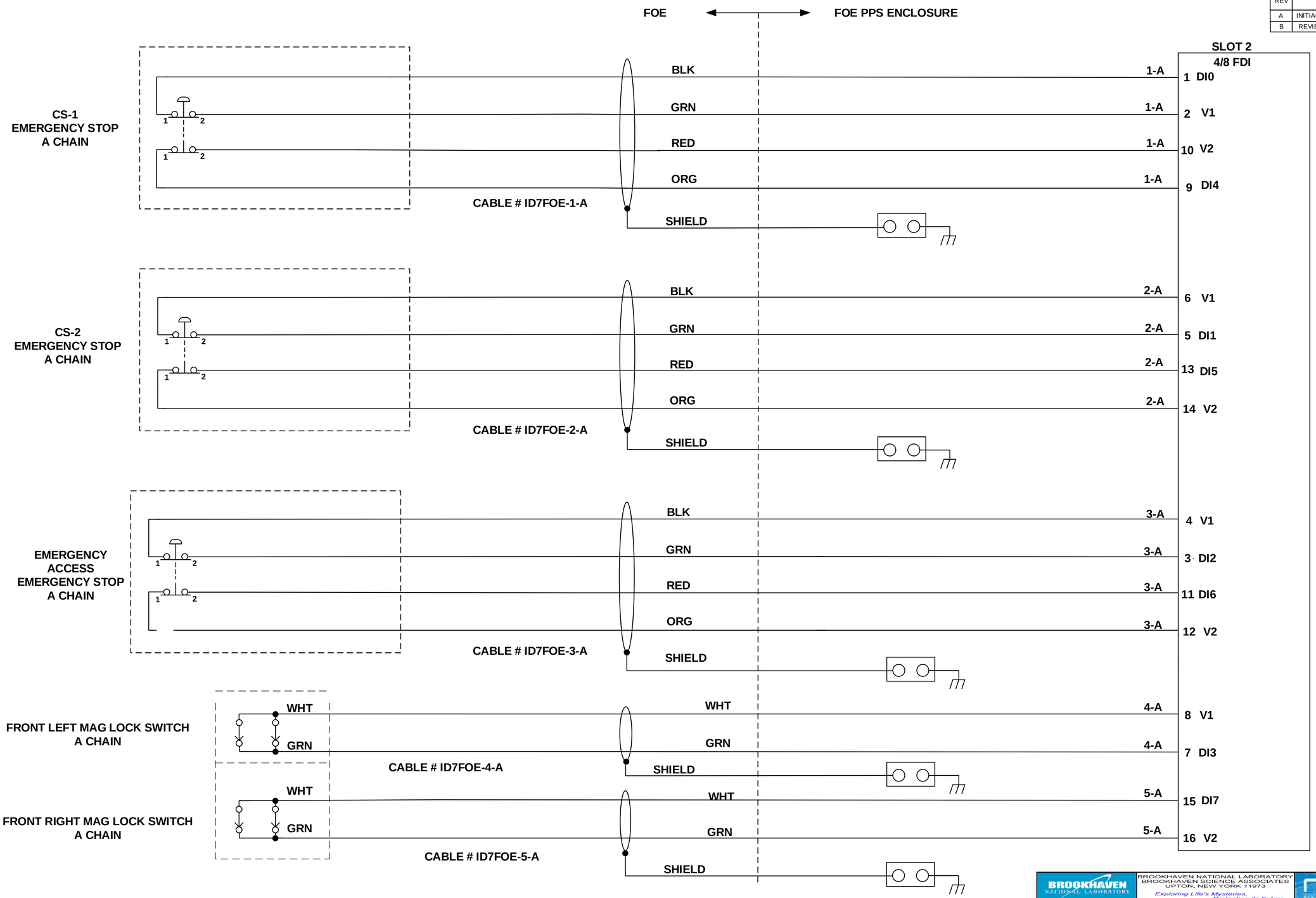


A

LT-EL-BL-EI-PPS-1070-91

BROOKHAVEN NATIONAL LABORATORY

BROOKHAVEN NATIONAL LABORATORY
BROOKHAVEN SCIENCE ASSOCIATES
UPTON, NEW YORK 11973
*Exploring Life's Mysteries, Protecting its Future*

NSLS II NATIONAL SYNCHROTRON LIGHT SOURCE II

UNLESS OTHERWISE SPECIFIED
INTEGER TOLERANCES ± .06
DECIMAL TOLERANCES
.X ± .030
.XX ± .015
.XXX ± .010
ANGULAR TOLERANCE ± 0.5°
UNSPECIFIED RADII .02 MAX
125 BREAK SHARP CORNERS AND EDGES
FINISH MAX .03 MIN .005

UNLESS OTHERWISE SPECIFIED DIMENSIONS ARE IN INCHES
DIMENSIONS IN [ ] ARE MILLIMETERS EQUIV. FOR REF. ONLY

ESH&Q RISK LEVEL A-1

INTERPRET DRAWING AS PER ANSI Y14.5 OR Y32.2

| | | DATE | OUTSTANDING ECN'S |
|---|---|---|---|
| DRWN BY | S. JARZABKOWSKI | 1/24/2018 | |
| CHK BY | J. MALLEY | 1/26/2018 | |
| ENG APP | S. BUDA | 1/24/2018 | |
| SUPV APP | G. GANETIS | 1/26/2018 | |
| QA APP | E. CHESWICK | 1/25/2018 | |
| ESH APP | B. LEE | 1/25/2018 | |

# WIRING DIAGRAM, 7-ID-FOE (SST-FOE) A CHAIN AND B CHAIN

LT-EL-BL-EI — DRAWING DIRECTORY
LT-EL-BL-EI-PPS-1070-91 — DRAWING NUMBER
B — REV

COMPUTER REPRODUCIBLE

SCALE: N/A

SHEET 1 OF 41

JOB NUMBER | USED ON DWG. NO.

| REV | DESCRIPTION | DATE | BY | CHECKED | APP |
|---|---|---|---|---|---|
| | SEE SHEET 1 | | | | |

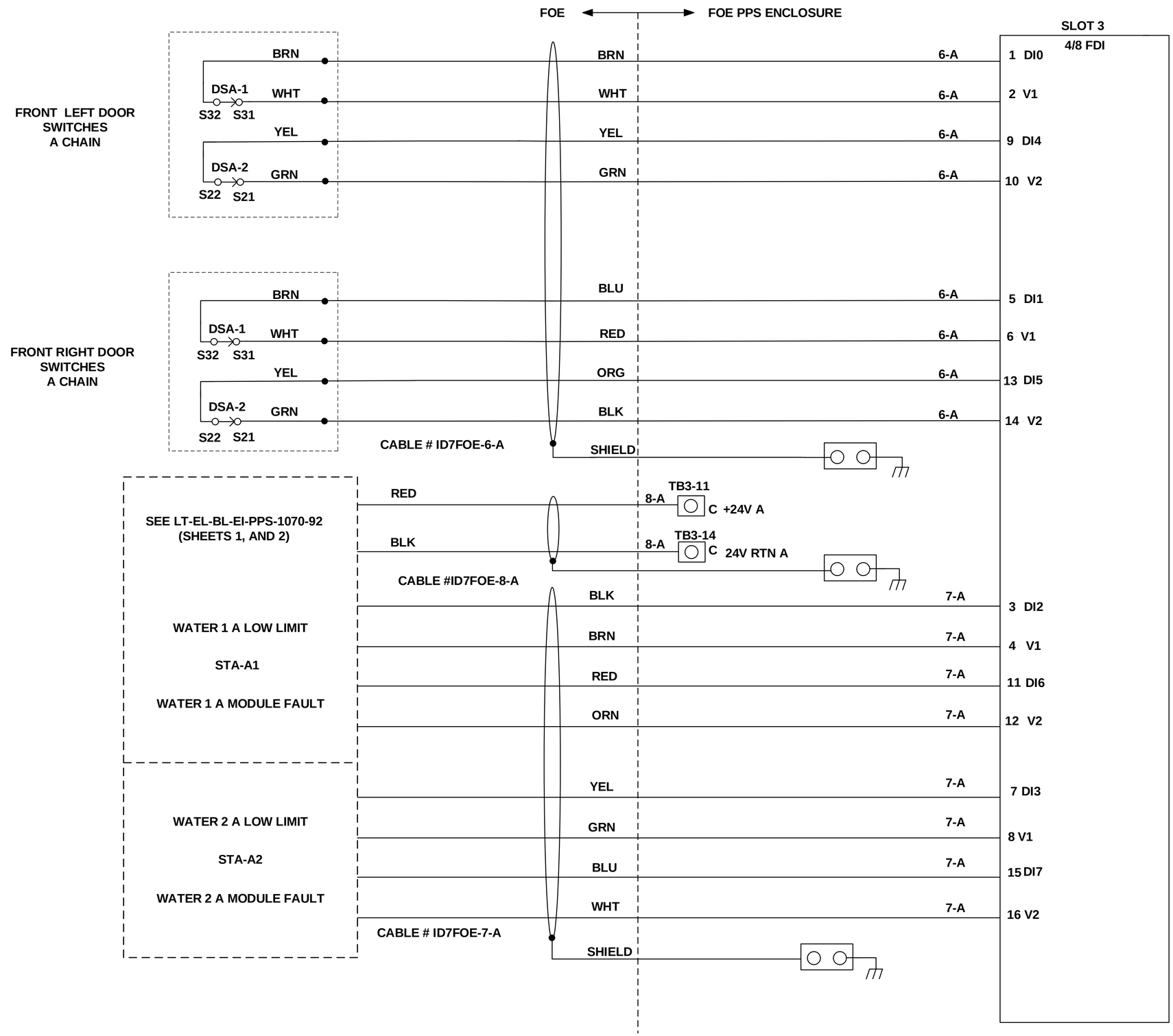


A

| LT-EL-BL-EI | LT-EL-BL-EI-PPS-1070-91 | B |
|---|---|---|
| DRAWING DIRECTORY | DRAWING NUMBER | REV |
| COMPUTER REPRODUCIBLE | SCALE: N/A | SHEET 2 OF 41 |

LT-EL-BL-EI-PPS-1070-91

| REV | DESCRIPTION | DATE | BY | CHECKED | APP |
|---|---|---|---|---|---|
| | SEE SHEET 1 | | | | |

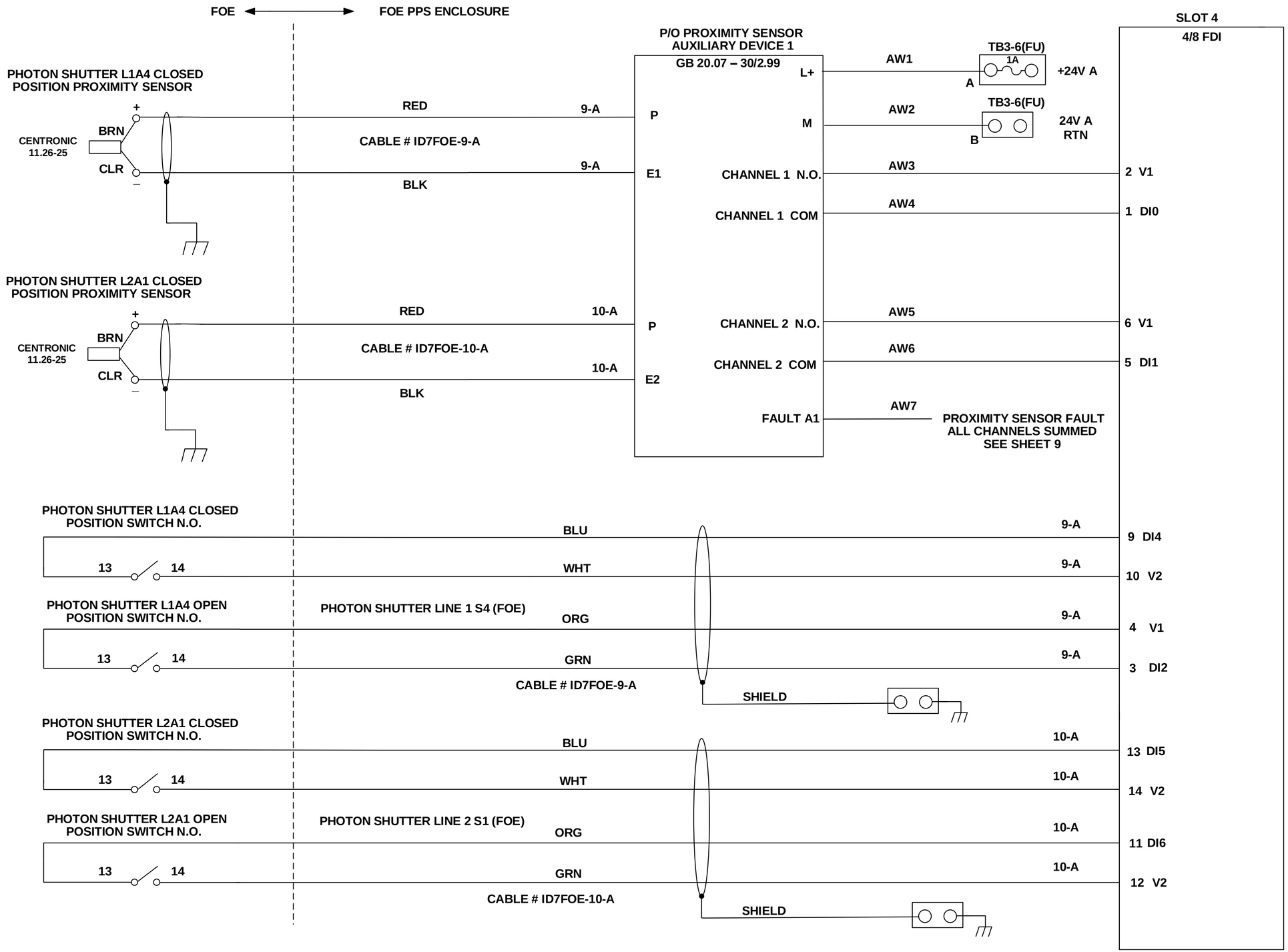


A

| LT-EL-BL-EI | LT-EL-BL-EI-PPS-1070-91 | B |
|---|---|---|
| DRAWING DIRECTORY | DRAWING NUMBER | REV |

COMPUTER REPRODUCIBLE | SCALE: N/A | SHEET 3 OF 41

LT-EL-BL-EI-PPS-1070-91

| REV | DESCRIPTION | DATE | BY | CHECKED | APP |
|---|---|---|---|---|---|
| | SEE SHEET 1 | | | | |

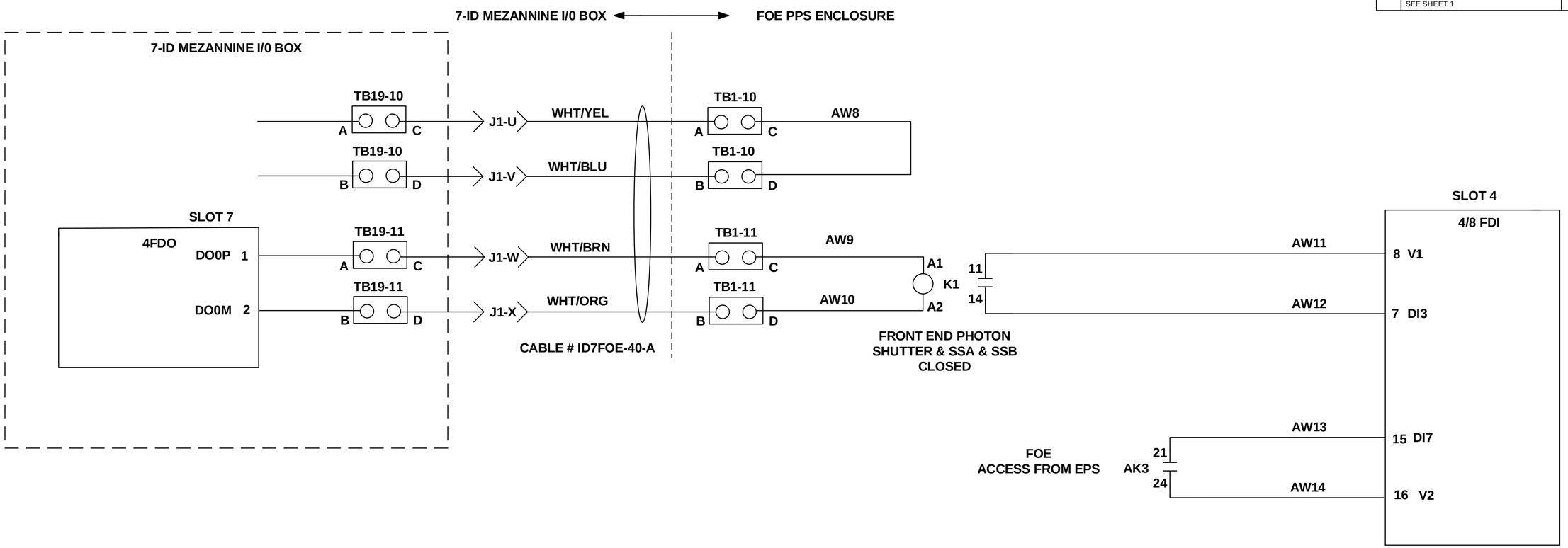


A

| LT-EL-BL-EI | LT-EL-BL-EI-PPS-1070-91 | B |
|---|---|---|
| DRAWING DIRECTORY | DRAWING NUMBER | REV |

COMPUTER REPRODUCIBLE | SCALE : N/A | SHEET 4 OF 41

LT-EL-BL-EI-PPS-1070-91

| REV | DESCRIPTION | DATE | BY | CHECKED | APP |
|---|---|---|---|---|---|
| | SEE SHEET 1 | | | | |

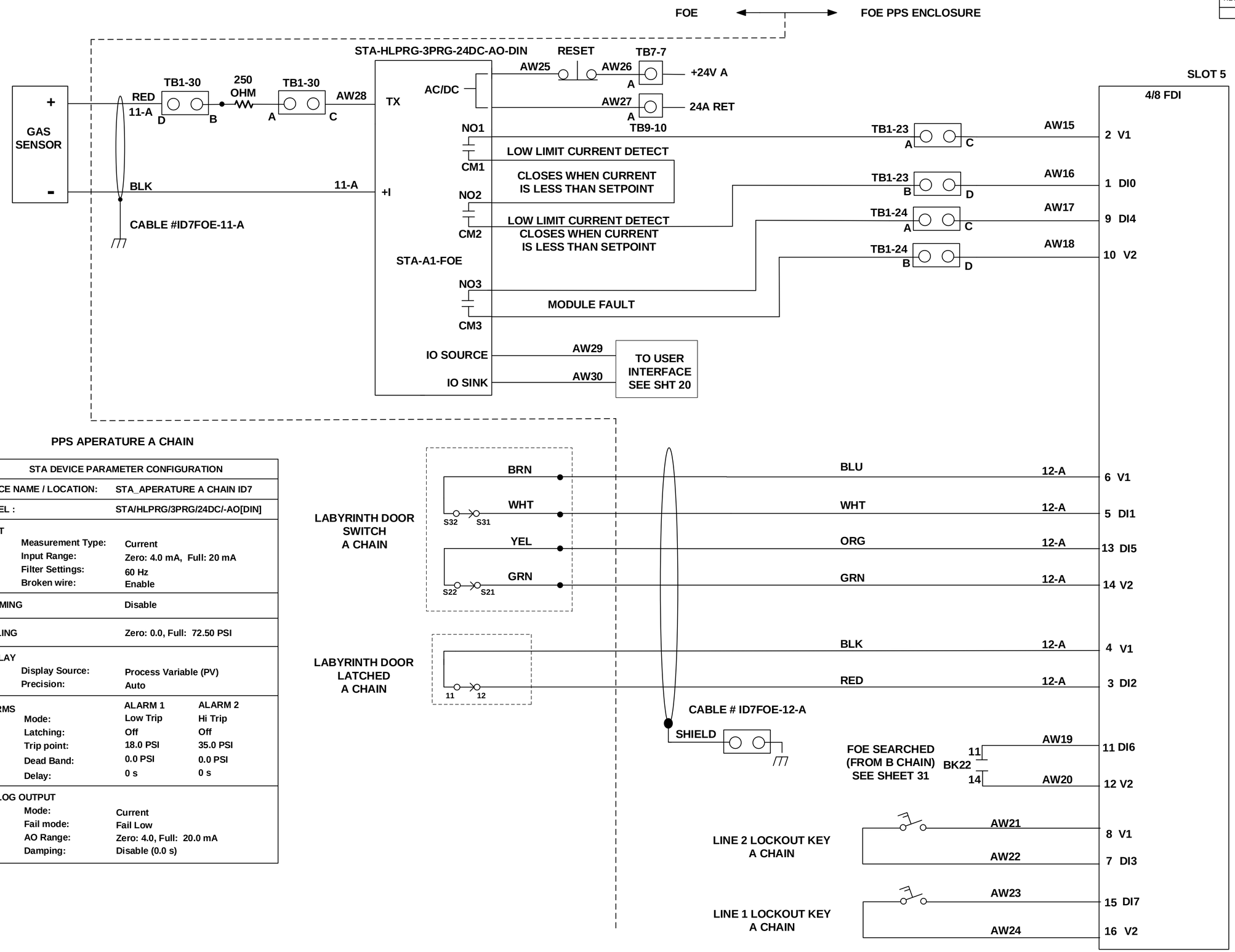


## PPS APERATURE A CHAIN

| STA DEVICE PARAMETER CONFIGURATION | | |
|---|---|---|
| DEVICE NAME / LOCATION: | STA_APERATURE A CHAIN ID7 | |
| MODEL : | STA/HLPRG/3PRG/24DC/-AO[DIN] | |
| INPUT | | |
| Measurement Type: | Current | |
| Input Range: | Zero: 4.0 mA, Full: 20 mA | |
| Filter Settings: | 60 Hz | |
| Broken wire: | Enable | |
| TRIMMING | Disable | |
| SCALING | Zero: 0.0, Full: 72.50 PSI | |
| DISPLAY | | |
| Display Source: | Process Variable (PV) | |
| Precision: | Auto | |
| ALARMS | ALARM 1 | ALARM 2 |
| Mode: | Low Trip | Hi Trip |
| Latching: | Off | Off |
| Trip point: | 18.0 PSI | 35.0 PSI |
| Dead Band: | 0.0 PSI | 0.0 PSI |
| Delay: | 0 s | 0 s |
| ANALOG OUTPUT | | |
| Mode: | Current | |
| Fail mode: | Fail Low | |
| AO Range: | Zero: 4.0, Full: 20.0 mA | |
| Damping: | Disable (0.0 s) | |

A

| LT-EL-BL-EI (DRAWING DIRECTORY) | LT-EL-BL-EI-PPS-1120-91 (DRAWING NUMBER) | B (REV) |
|---|---|---|
| COMPUTER REPRODUCABLE | SCALE: N/A | SHEET 5 OF 40 |

LT-EL-BL-EI-PPS-1120-91

| REV | DESCRIPTION | DATE | BY | CHECKED | APP |
|---|---|---|---|---|---|
| | SEE SHEET 1 | | | | |

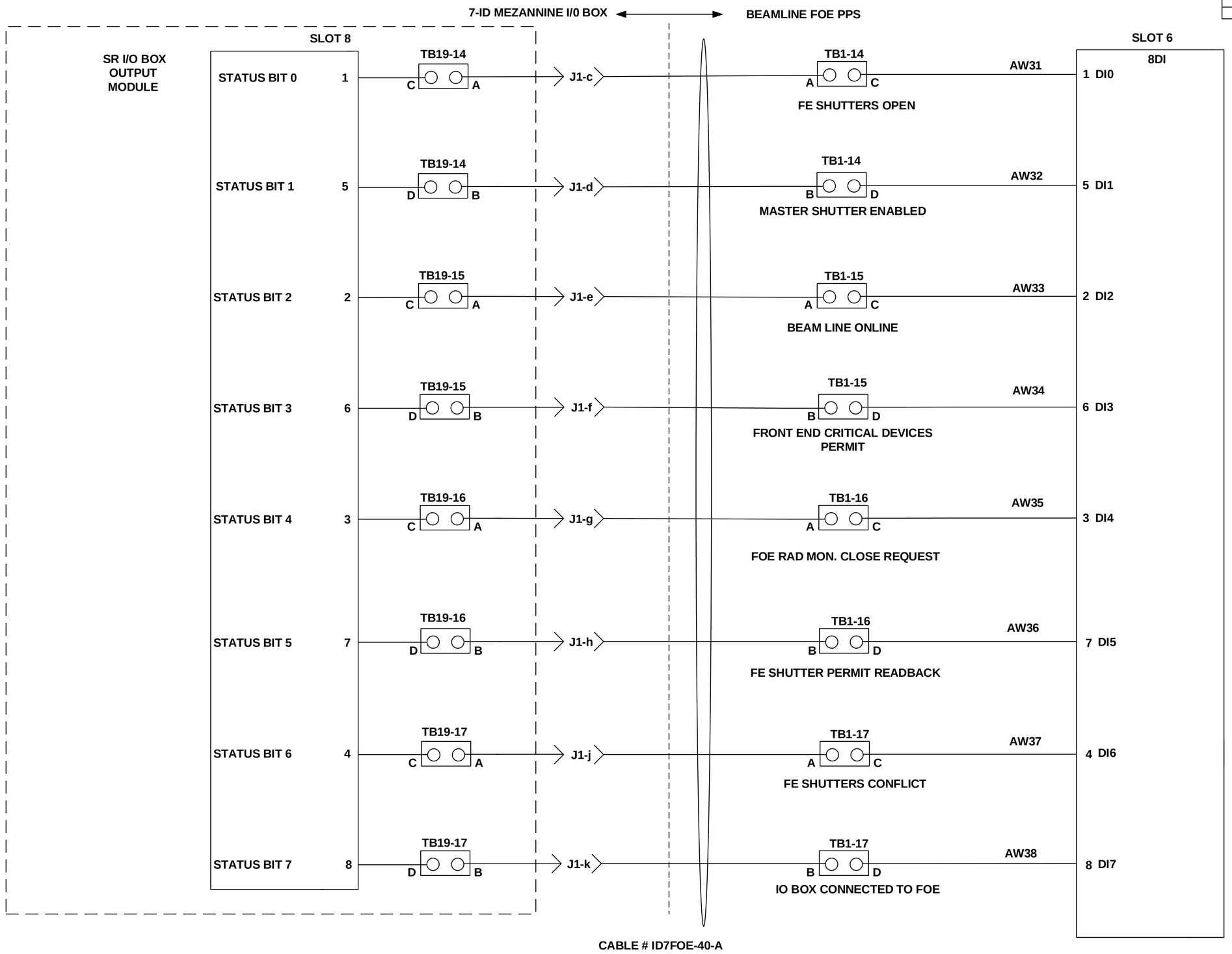


A

| LT-EL-BL-EI (DRAWING DIRECTORY) | LT-EL-BL-EI-PPS-1070-91 (DRAWING NUMBER) | B (REV) |
|---|---|---|
| COMPUTER REPRODUCIBLE | SCALE: N/A | SHEET 6 OF 41 |

LT-EL-BL-EI-PPS-1070-91

| REV | DESCRIPTION | DATE | BY | CHECKED | APP |
|---|---|---|---|---|---|
| | SEE SHEET 1 | | | | |

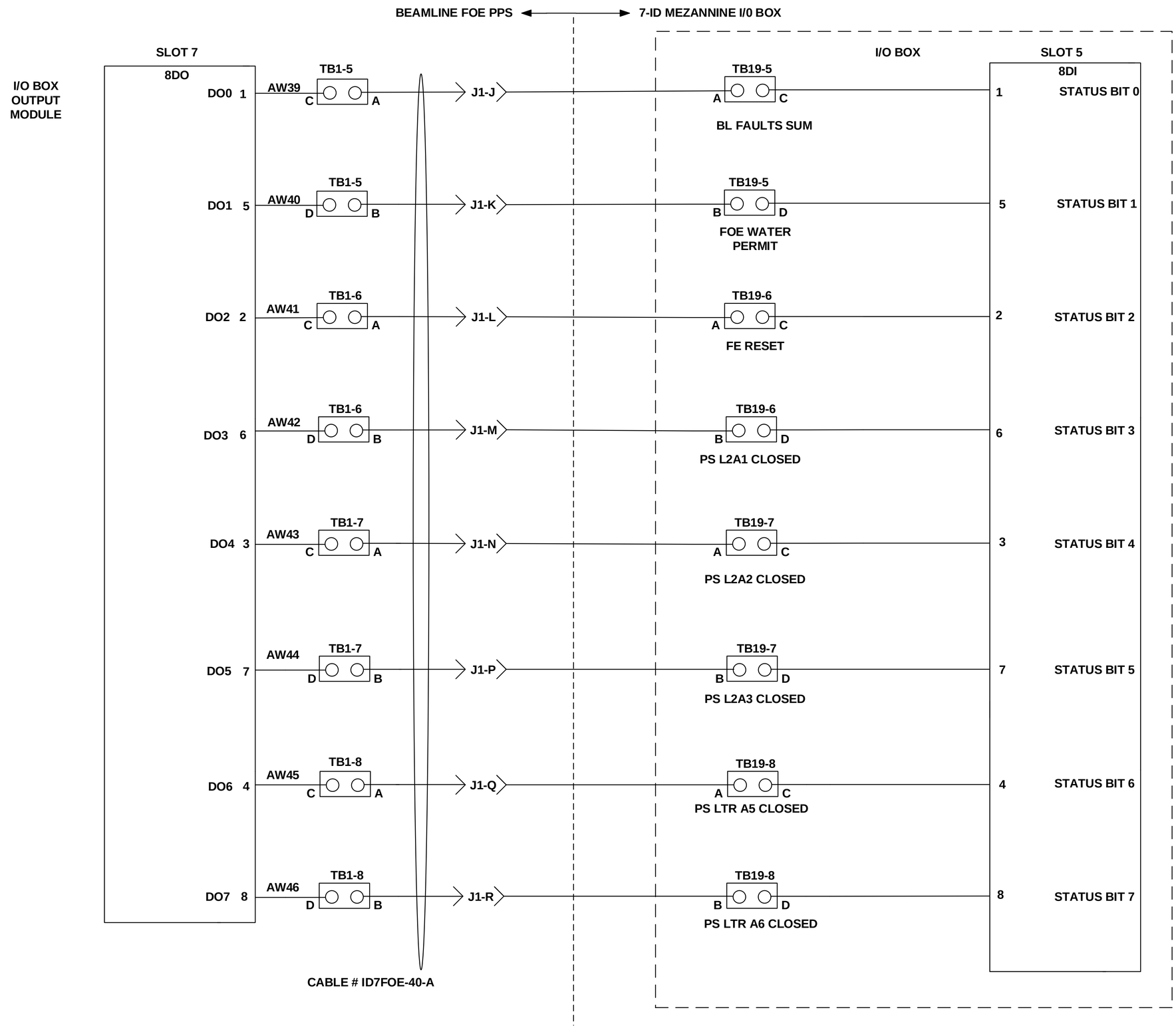


A

| LT-EL-BL-EI DRAWING DIRECTORY | LT-EL-BL-EI-PPS-1070-91 DRAWING NUMBER | B REV |
|---|---|---|
| COMPUTER REPRODUCIBLE | SCALE: N/A | SHEET 7 OF 41 |

LT-EL-BL-EI-PPS-1070-91

| REV | DESCRIPTION | DATE | BY | CHECKED | APP |
|---|---|---|---|---|---|
| | SEE SHEET 1 | | | | |

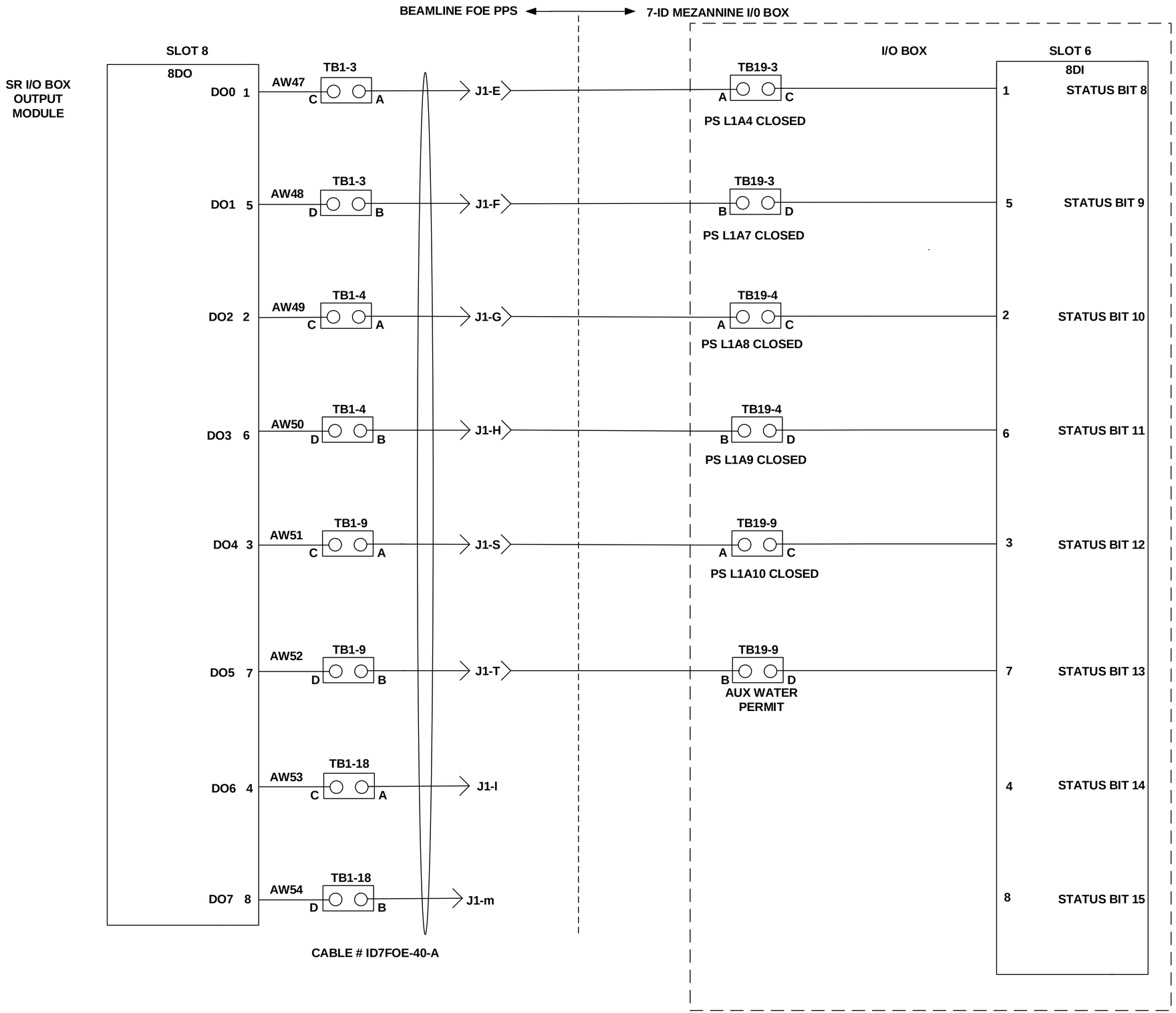


A

| | | |
|---|---|---|
| LT-EL-BL-EI (DRAWING DIRECTORY) | LT-EL-BL-EI-PPS-1070-91 (DRAWING NUMBER) | B (REV) |
| COMPUTER REPRODUCIBLE | SCALE: N/A | SHEET 8 OF 41 |

LT-EL-BL-EI-PPS-1070-91

| REV | DESCRIPTION | DATE | BY | CHECKED | APP |
|---|---|---|---|---|---|
| | SEE SHEET 1 | | | | |

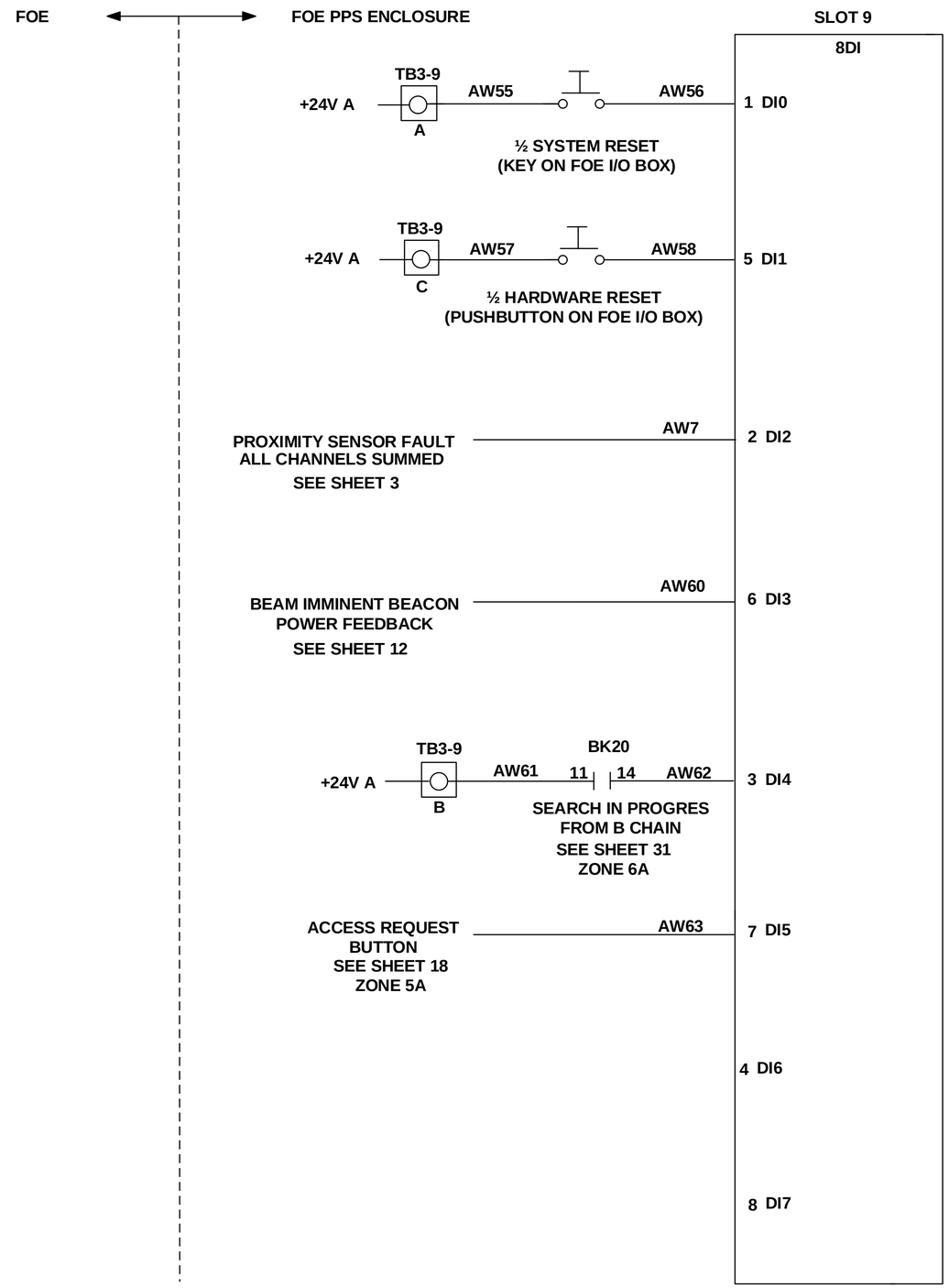


A

| LT-EL-BL-EI | LT-EL-BL-EI-PPS-1070-91 | B |
|---|---|---|
| DRAWING DIRECTORY | DRAWING NUMBER | REV |

COMPUTER REPRODUCIBLE | SCALE: N/A | SHEET 9 OF 41

LT-EL-BL-EI-PPS-1070-91

| REV | DESCRIPTION | DATE | BY | CHECKED | APP |
|---|---|---|---|---|---|
| | SEE SHEET 1 | | | | |

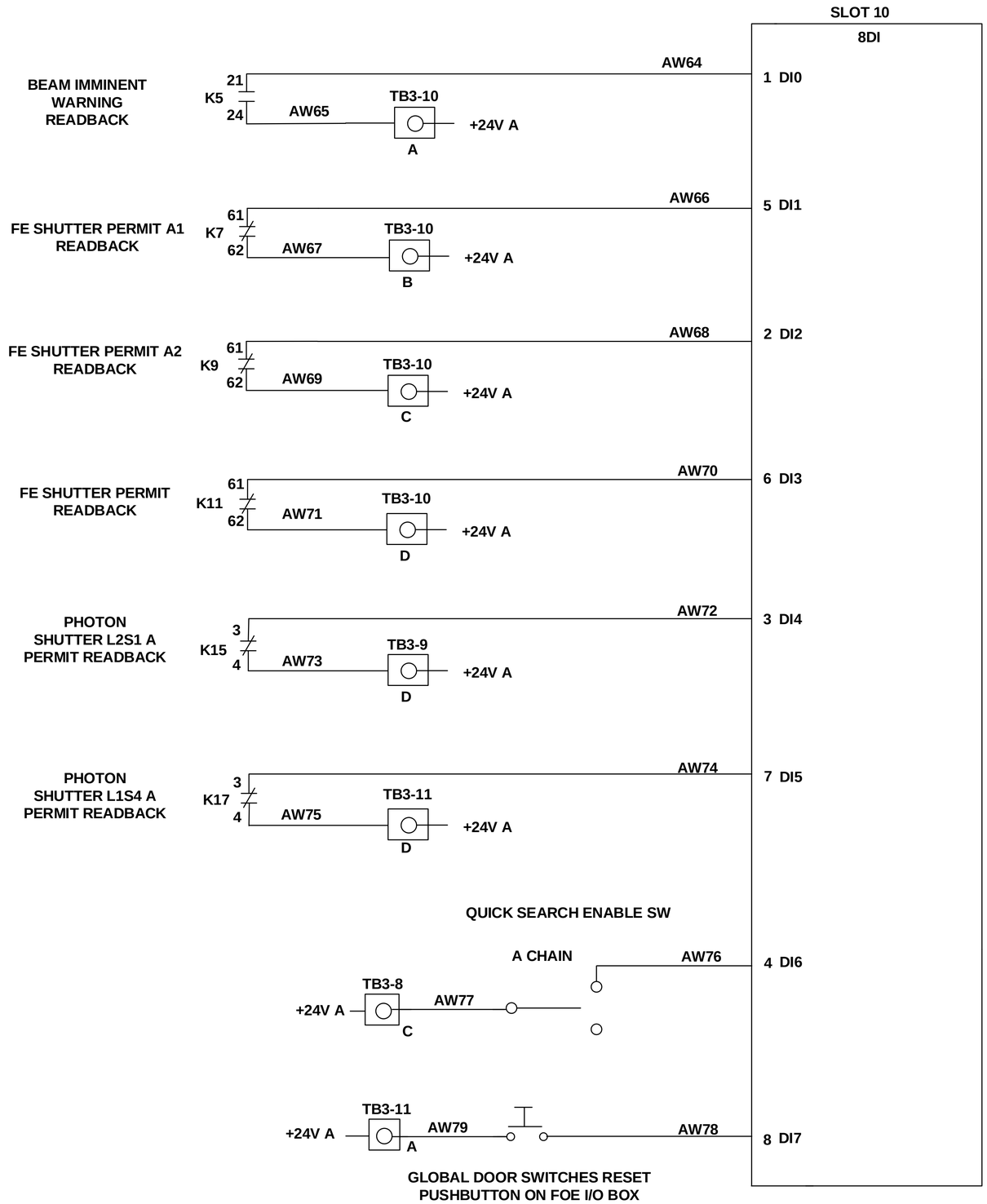


A

| LT-EL-BL-EI | LT-EL-BL-EI-PPS-1070-91 | B |
|---|---|---|
| DRAWING DIRECTORY | DRAWING NUMBER | REV |

COMPUTER REPRODUCIBLE | SCALE: N/A | SHEET 10 OF 41

LT-EL-BL-EI-PPS-1070-91

| REV | DESCRIPTION | DATE | BY | CHECKED | APP |
|---|---|---|---|---|---|
| | SEE SHEET 1 | | | | |

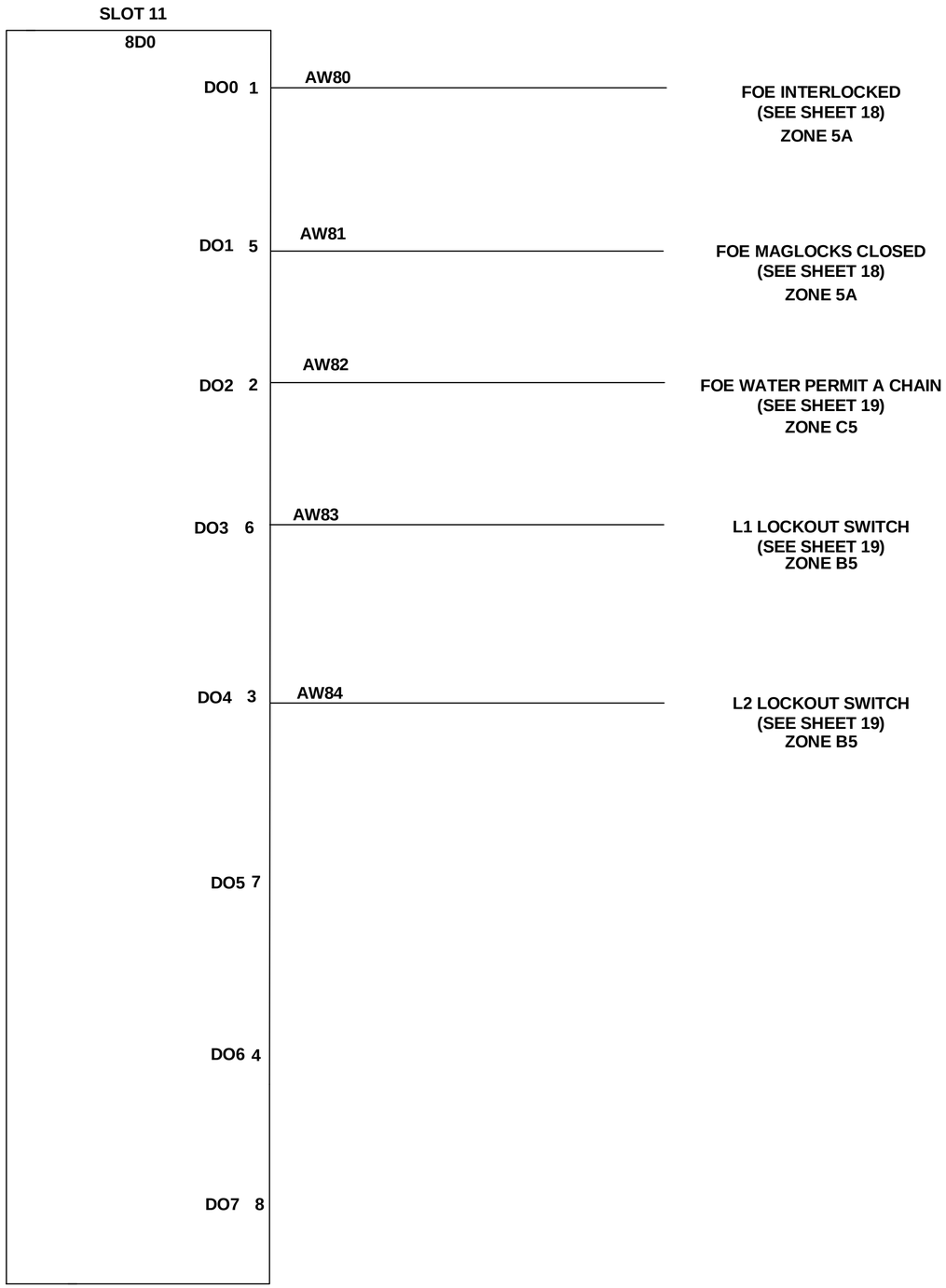


A

| LT-EL-BL-EI | LT-EL-BL-EI-PPS-1070-91 | B |
|---|---|---|
| DRAWING DIRECTORY | DRAWING NUMBER | REV |

COMPUTER REPRODUCIBLE | SCALE: N/A | SHEET 11 OF 41

LT-EL-BL-EI-PPS-1070-91

| REV | DESCRIPTION | DATE | BY | CHECKED | APP |
|---|---|---|---|---|---|
| | SEE SHEET 1 | | | | |

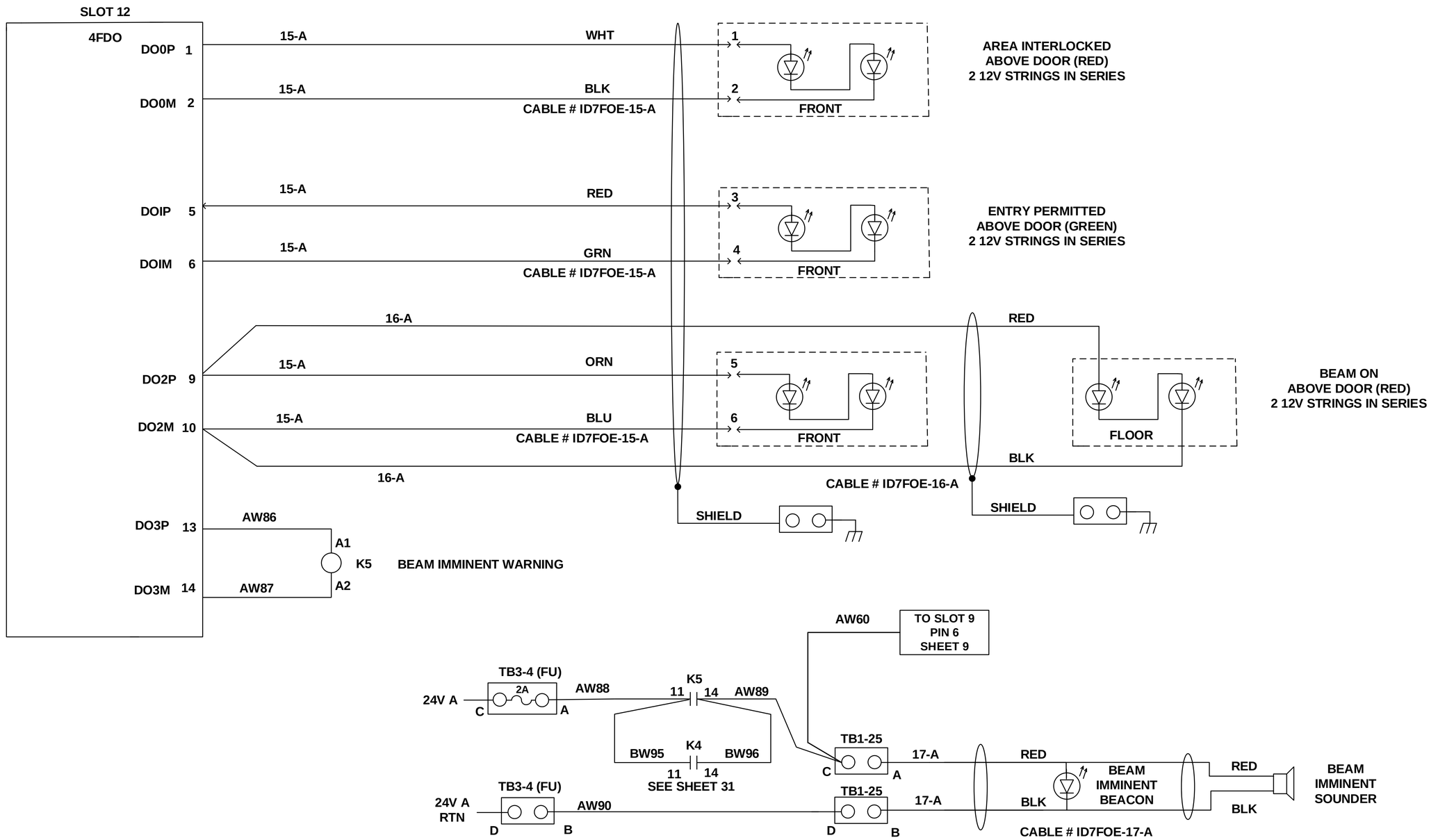


A

| LT-EL-BL-EI | LT-EL-BL-EI-PPS-1070-91 | B |
|---|---|---|
| DRAWING DIRECTORY | DRAWING NUMBER | REV |
| COMPUTER REPRODUCIBLE | SCALE : N/A | SHEET 12 OF 41 |

LT-EL-BL-EI-PPS-1070-91

| REV | DESCRIPTION | DATE | BY | CHECKED | APP |
|---|---|---|---|---|---|
| | SEE SHEET 1 | | | | |

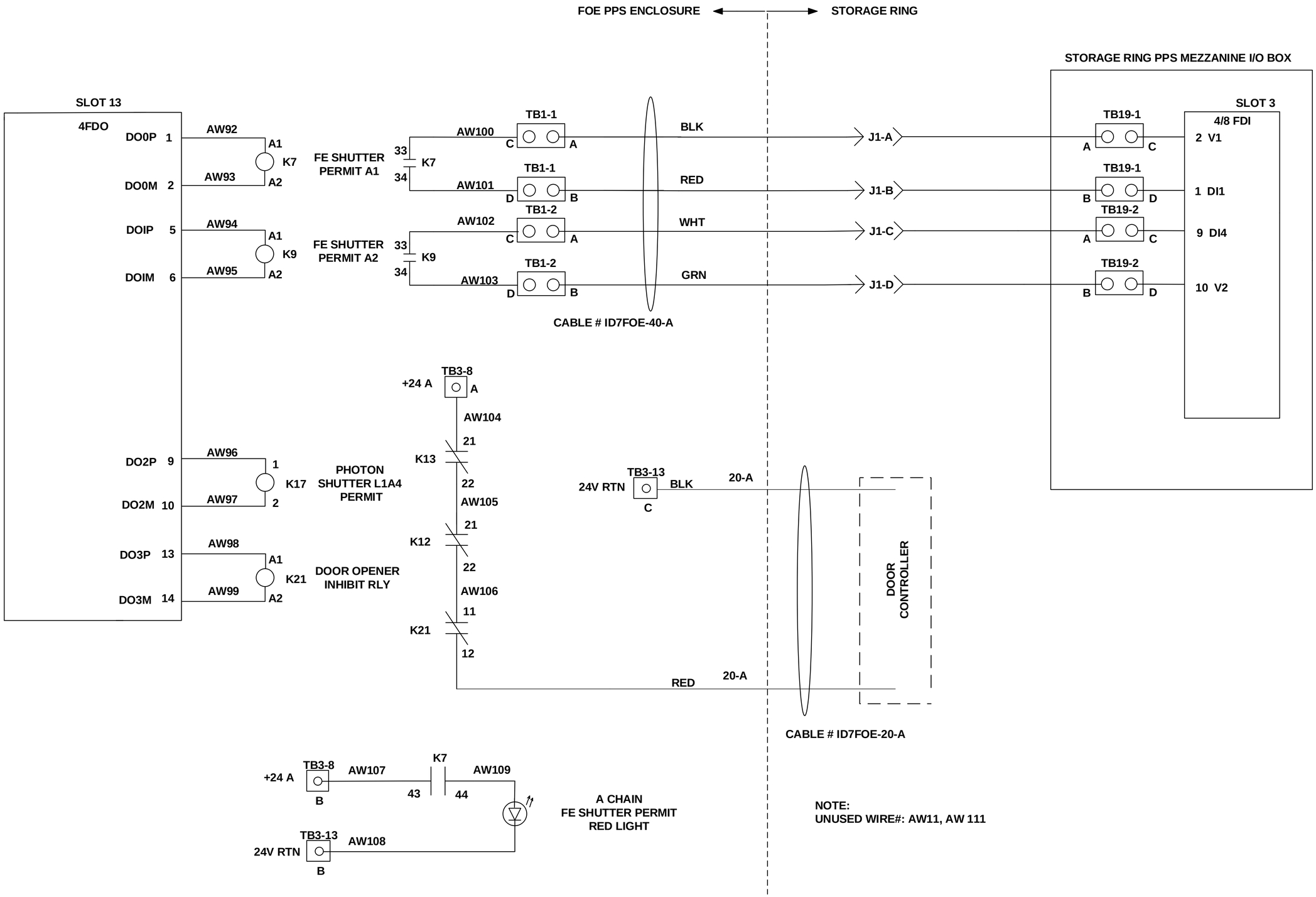


NOTE:
UNUSED WIRE#: AW11, AW 111

A

| LT-EL-BL-EI | LT-EL-BL-EI-PPS-1070-91 | B |
|---|---|---|
| DRAWING DIRECTORY | DRAWING NUMBER | REV |
| COMPUTER REPRODUCIBLE | SCALE: N/A | SHEET 13 OF 41 |

LT-EL-BL-EI-PPS-1070-91

| REV | DESCRIPTION | DATE | BY | CHECKED | APP |
|---|---|---|---|---|---|
| | SEE SHEET 1 | | | | |

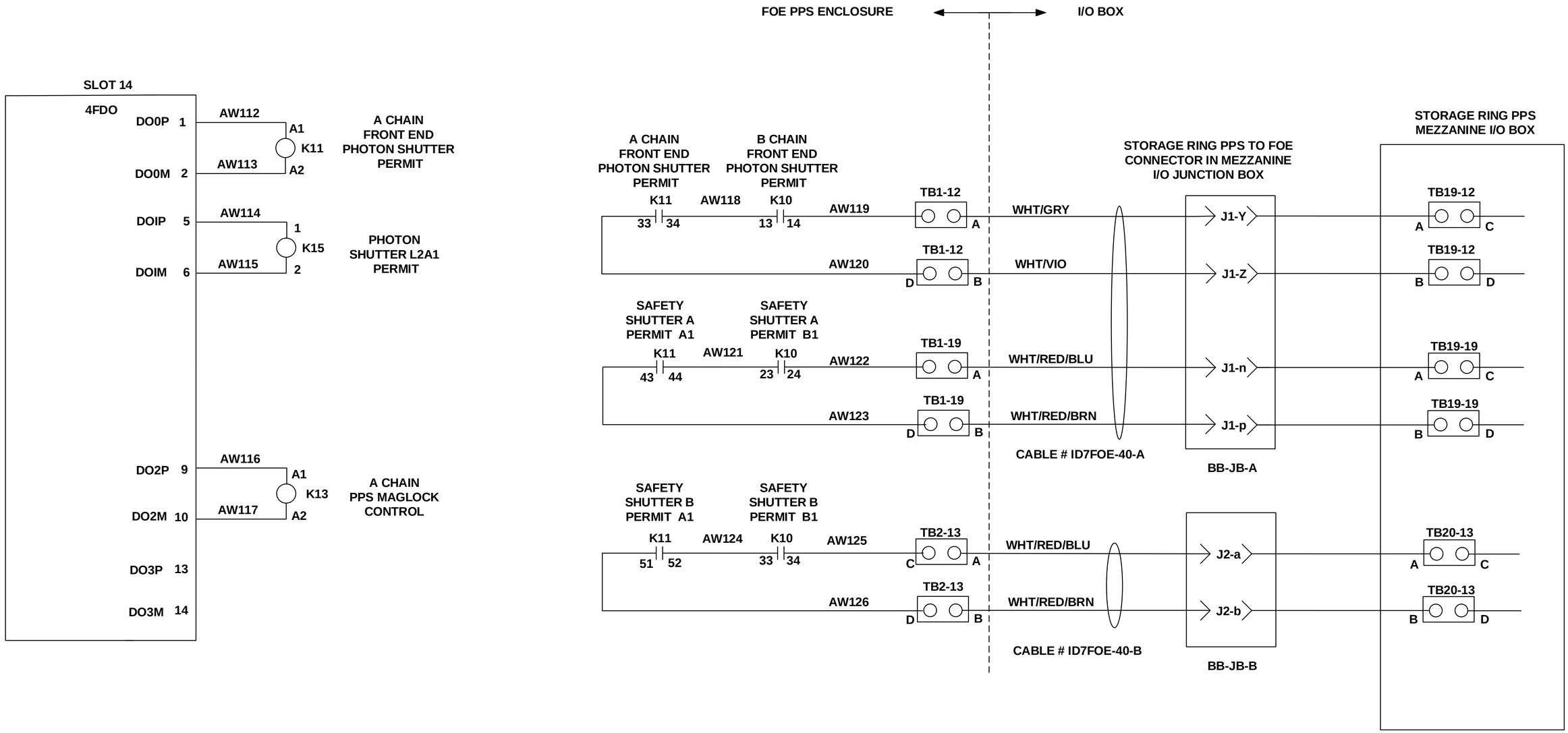


NOTE:
UNUSED WIRE#: AW129

A

| LT-EL-BL-EI | LT-EL-BL-EI-PPS-1070-91 | B |
|---|---|---|
| DRAWING DIRECTORY | DRAWING NUMBER | REV |

COMPUTER REPRODUCIBLE | SCALE: N/A | SHEET 14 OF 41

LT-EL-BL-EI-PPS-1070-91

| REV | DESCRIPTION | DATE | BY | CHECKED | APP |
|---|---|---|---|---|---|
| | SEE SHEET 1 | | | | |

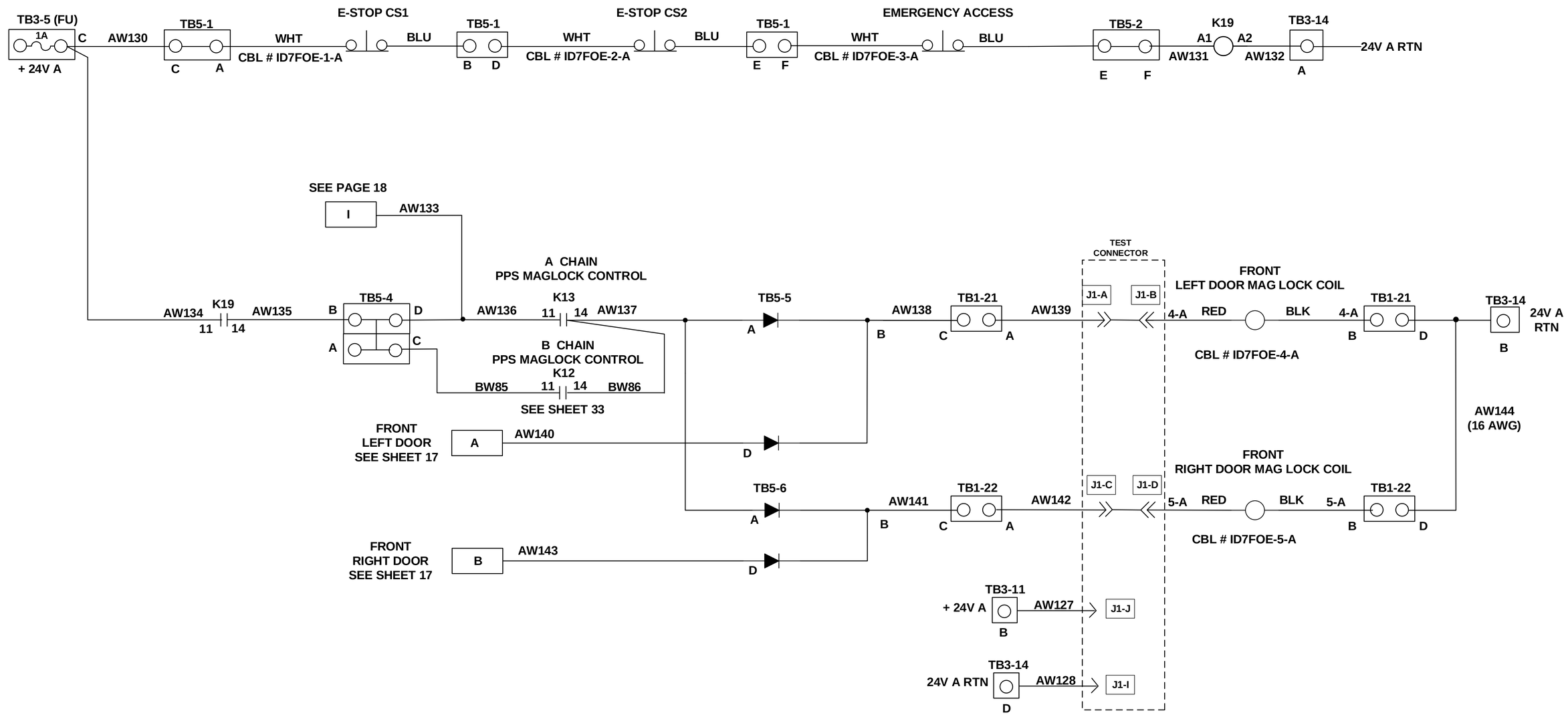


A

| LT-EL-BL-EI | LT-EL-BL-EI-PPS-1070-91 | B |
|---|---|---|
| DRAWING DIRECTORY | DRAWING NUMBER | REV |
| COMPUTER REPRODUCIBLE | SCALE: N/A | SHEET 15 OF 41 |

LT-EL-BL-EI-PPS-1070-91

| REV | DESCRIPTION | DATE | BY | CHECKED | APP |
|---|---|---|---|---|---|
| | SEE SHEET 1 | | | | |

NOTES:
J1 REFERS TO TEST CONNECTOR

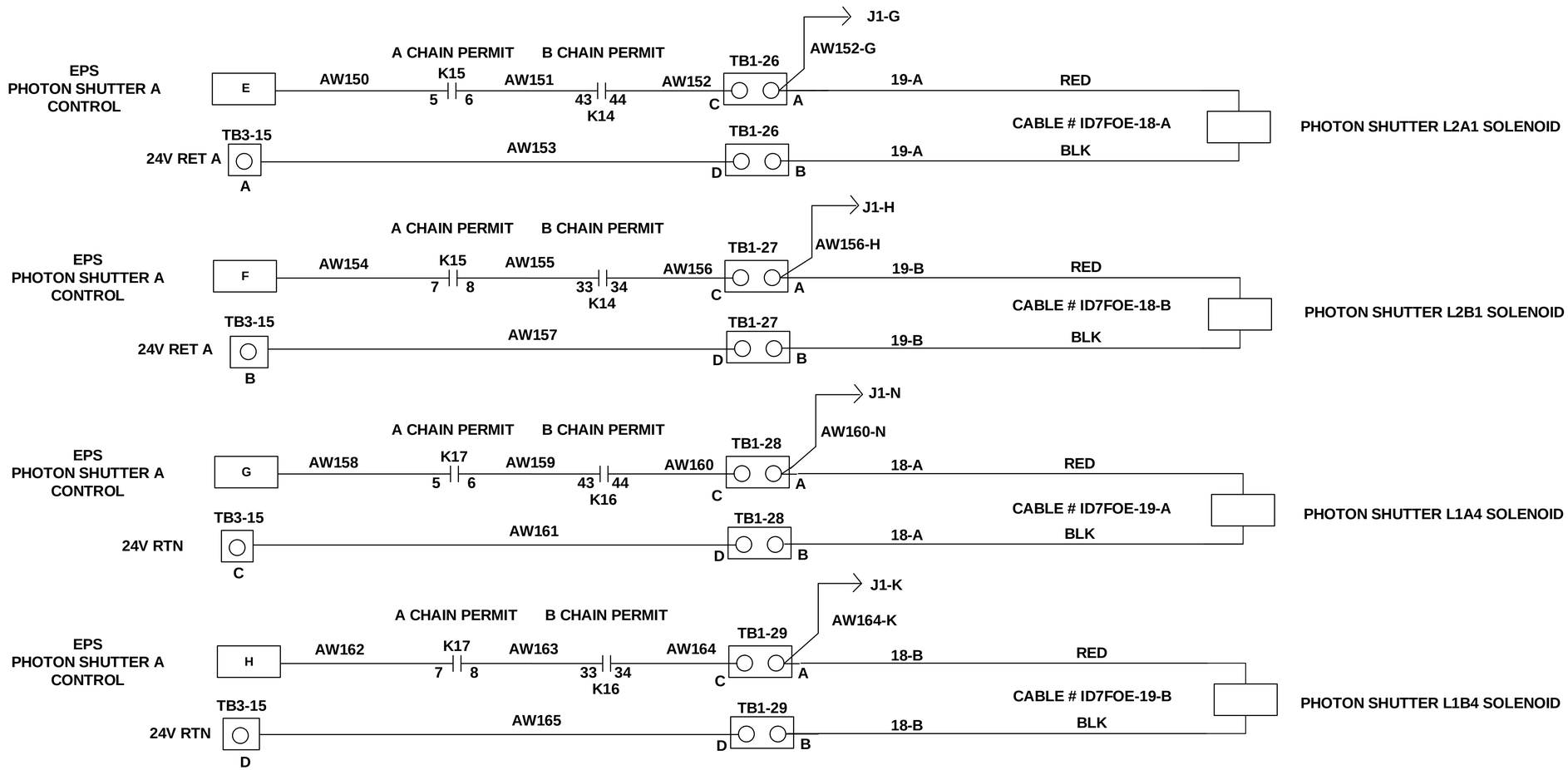


A

| LT-EL-BL-EI | LT-EL-BL-EI-PPS-1070-91 | B |
|---|---|---|
| DRAWING DIRECTORY | DRAWING NUMBER | REV |
| COMPUTER REPRODUCIBLE | SCALE: N/A | SHEET 16 OF 41 |

LT-EL-BL-EI-PPS-1070-91

| REV | DESCRIPTION | DATE | BY | CHECKED | APP |
|---|---|---|---|---|---|
| | SEE SHEET 1 | | | | |

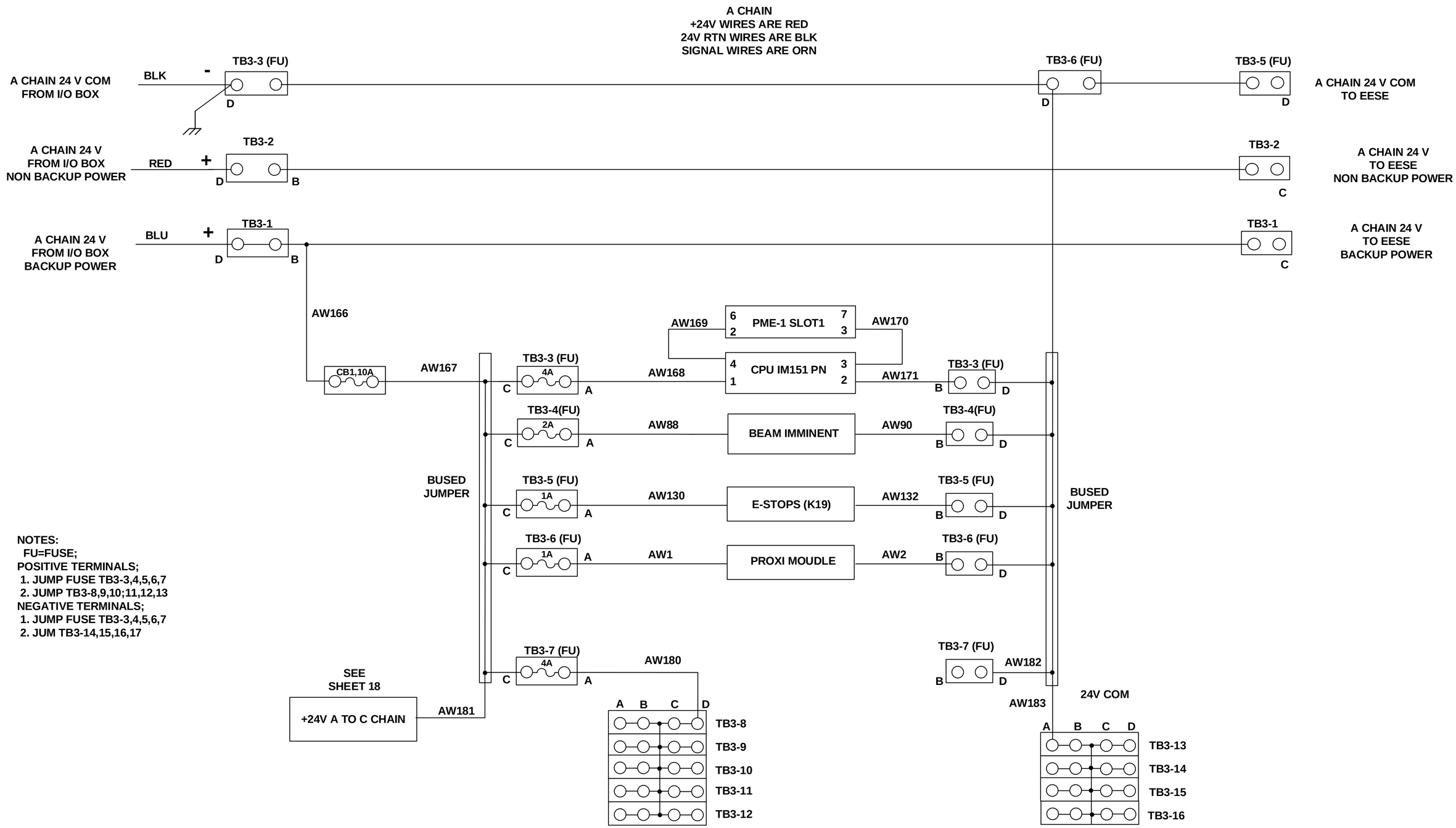


NOTES:
FU=FUSE;
POSITIVE TERMINALS;
1. JUMP FUSE TB3-3,4,5,6,7
2. JUMP TB3-8,9,10;11,12,13
NEGATIVE TERMINALS;
1. JUMP FUSE TB3-3,4,5,6,7
2. JUM TB3-14,15,16,17

A

| LT-EL-BL-EI (DRAWING DIRECTORY) | LT-EL-BL-EI-PPS-1070-91 (DRAWING NUMBER) | B (REV) |
|---|---|---|
| COMPUTER REPRODUCIBLE | SCALE: N/A | SHEET 17 OF 41 |

LT-EL-BL-EI-PPS-1070-91

| REV | DESCRIPTION | DATE | BY | CHECKED | APP |
|---|---|---|---|---|---|
| | SEE SHEET 1 | | | | |

# C CHAIN

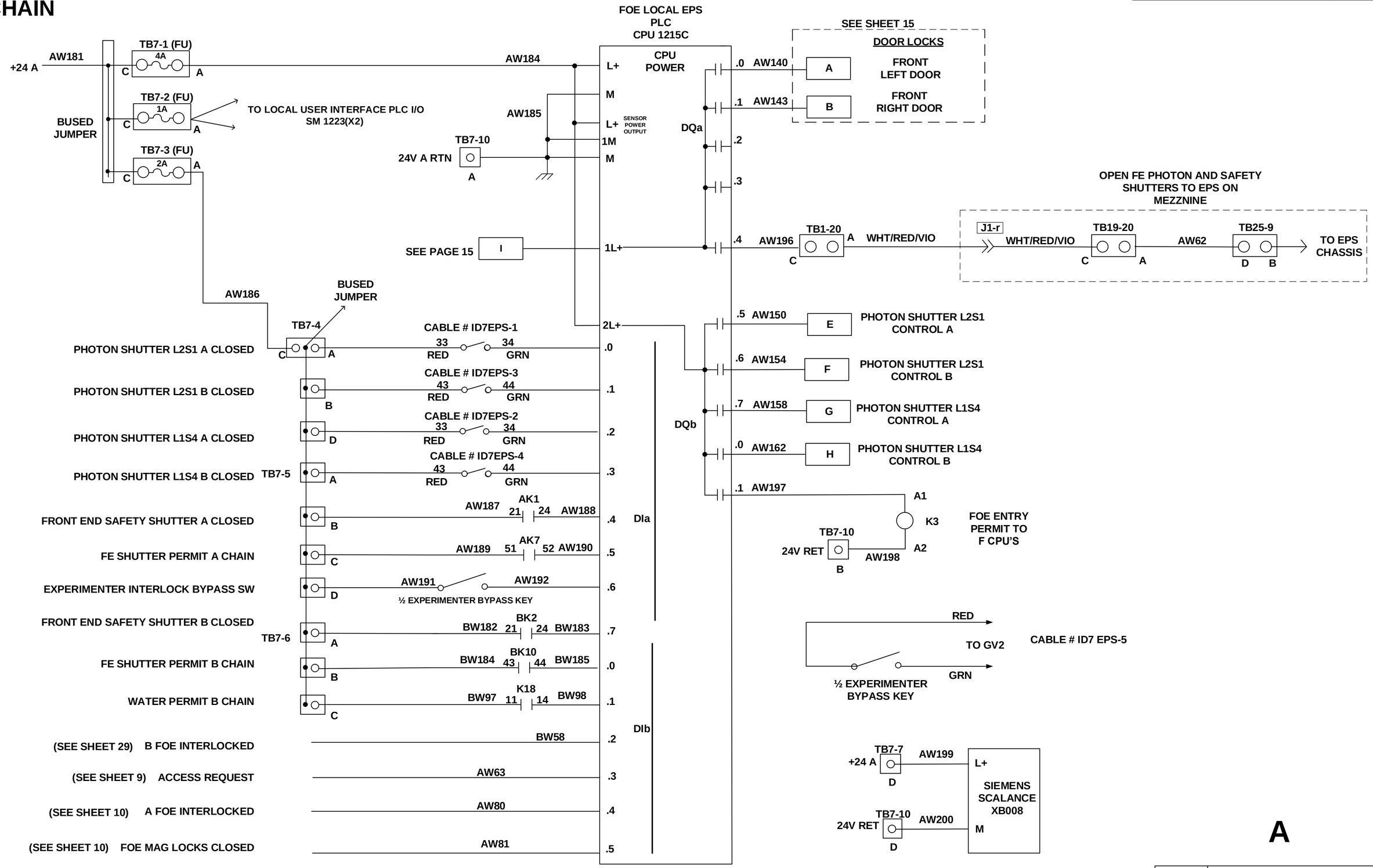


A

| LT-EL-BL-EI | LT-EL-BL-EI-PPS-1070-91 | B |
|---|---|---|
| DRAWING DIRECTORY | DRAWING NUMBER | REV |
| COMPUTER REPRODUCIBLE | SCALE: N/A | SHEET 18 OF 41 |

LT-EL-BL-EI-PPS-1070-91

| REV | DESCRIPTION | DATE | BY | CHECKED | APP |
|---|---|---|---|---|---|
| | SEE SHEET 1 | | | | |

# C CHAIN

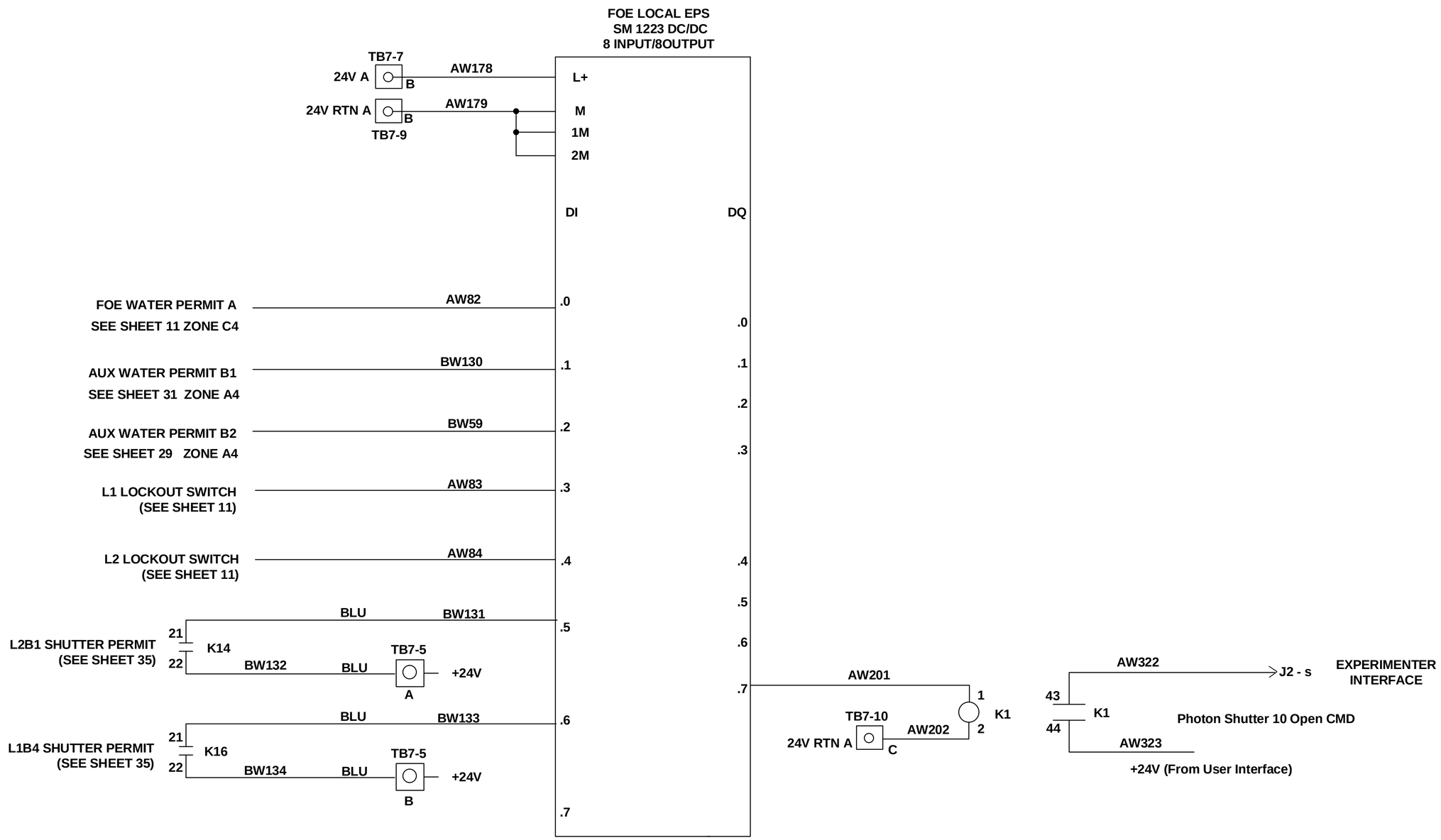


A

| LT-EL-BL-EI | LT-EL-BL-EI-PPS-1070-91 | B |
|---|---|---|
| DRAWING DIRECTORY | DRAWING NUMBER | REV |
| COMPUTER REPRODUCIBLE | SCALE: N/A | SHEET 19 OF 41 |

LT-EL-BL-EI-PPS-1070-91

| REV | DESCRIPTION | DATE | BY | CHECKED | APP |
|---|---|---|---|---|---|
| | SEE SHEET 1 | | | | |

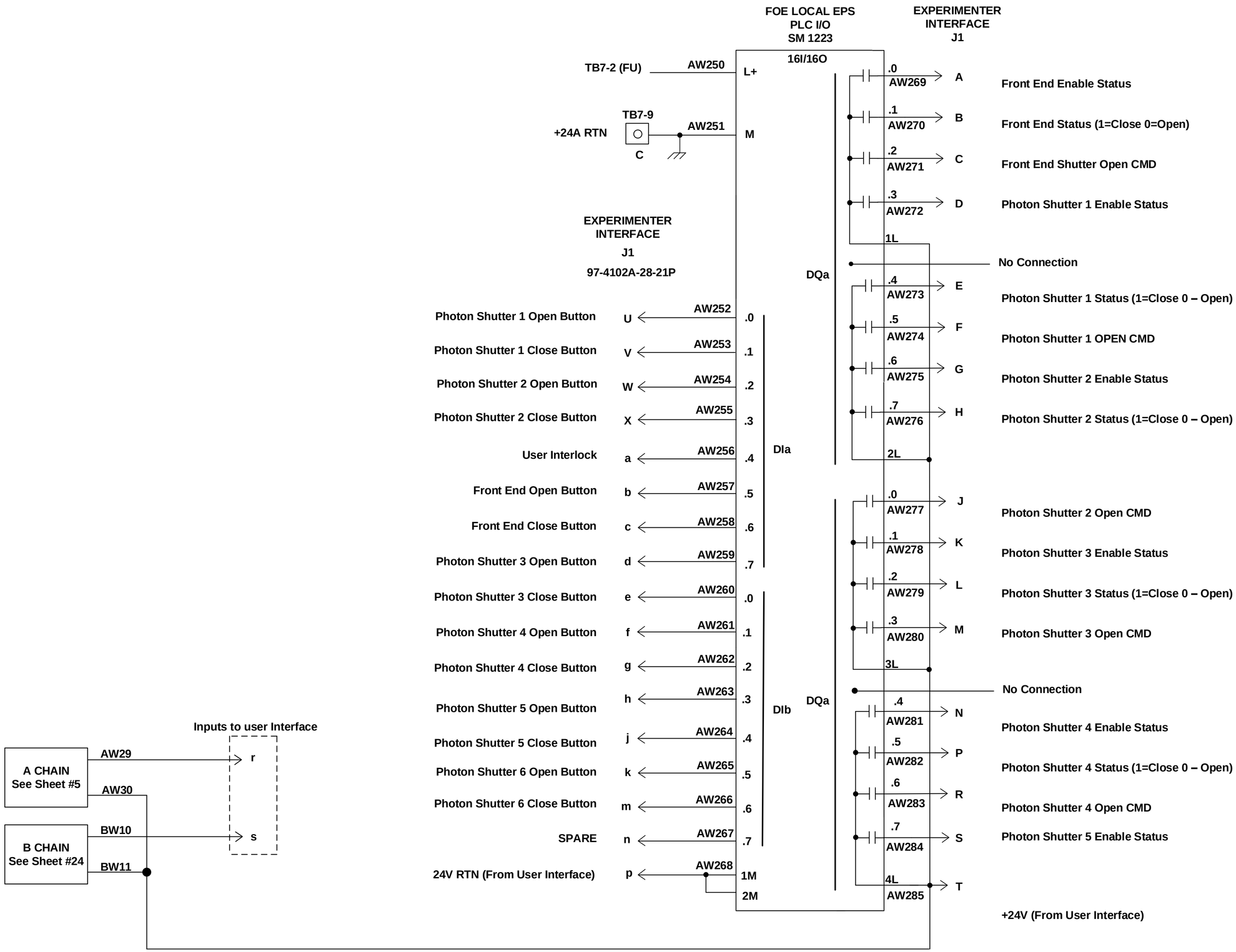


A

| LT-EL-BL-EI | LT-EL-BL-EI-PPS-1070-91 | B |
|---|---|---|
| DRAWING DIRECTORY | DRAWING NUMBER | REV |

COMPUTER REPRODUCIBLE | SCALE: N/A | SHEET 20 OF 41

LT-EL-BL-EI-PPS-1070-91

| REV | DESCRIPTION | DATE | BY | CHECKED | APP |
|---|---|---|---|---|---|
| | SEE SHEET 1 | | | | |

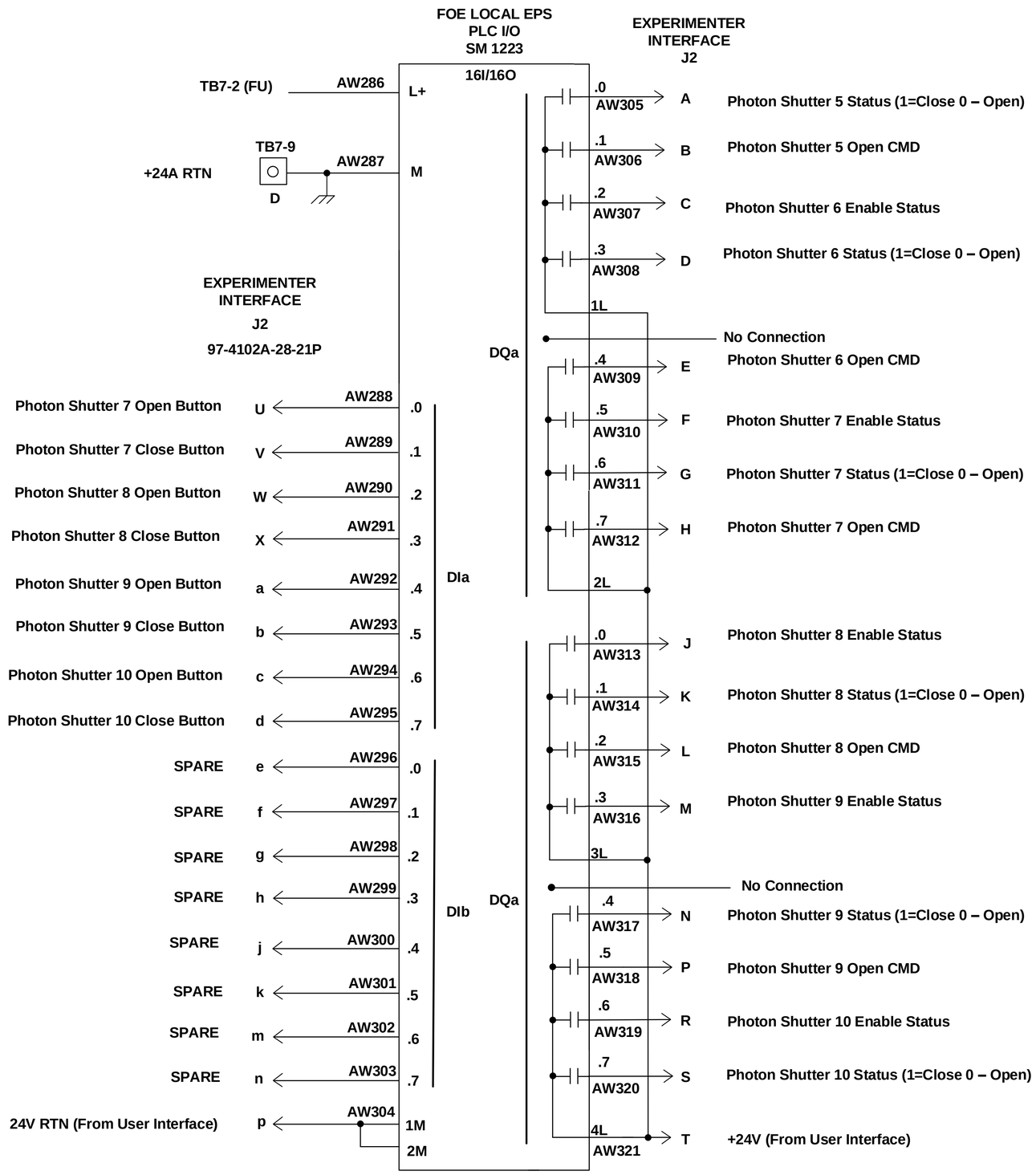


A

| LT-EL-BL-EI | LT-EL-BL-EI-PPS-1070-91 | B |
|---|---|---|
| DRAWING DIRECTORY | DRAWING NUMBER | REV |

COMPUTER REPRODUCIBLE | SCALE: N/A | SHEET 21 OF 41

LT-EL-BL-EI-PPS-1070-91

| REV | DESCRIPTION | DATE | BY | CHECKED | APP |
|---|---|---|---|---|---|
| | SEE SHEET 1 | | | | |

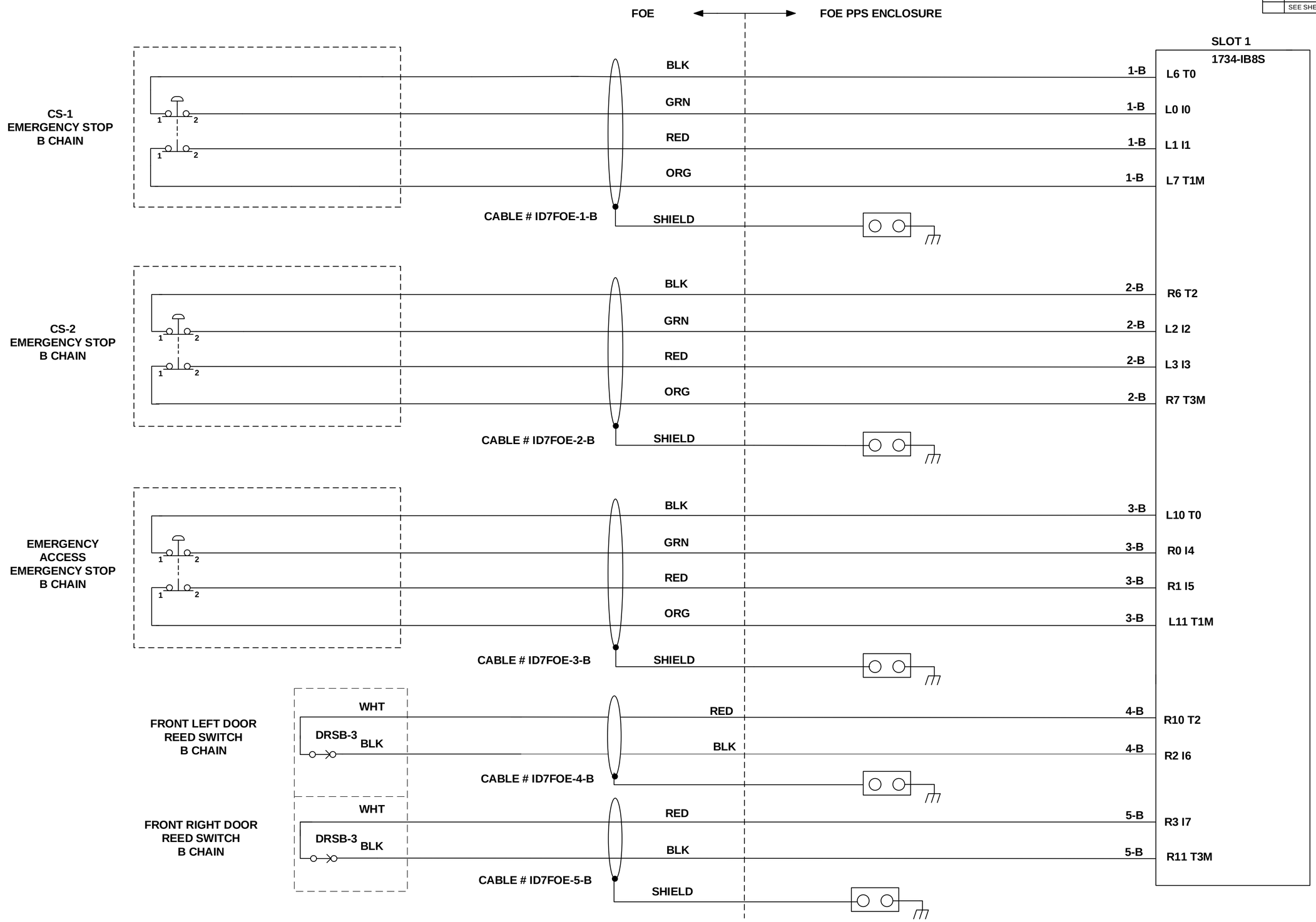


**B**

| LT-EL-BL-EI | LT-EL-BL-EI-PPS-1070-91 | B |
|---|---|---|
| DRAWING DIRECTORY | DRAWING NUMBER | REV |

COMPUTER REPRODUCIBLE | SCALE: N/A | SHEET 22 OF 41

LT-EL-BL-EI-PPS-1070-91

| REV | DESCRIPTION | DATE | BY | CHECKED | APP |
|---|---|---|---|---|---|
| | SEE SHEET 1 | | | | |

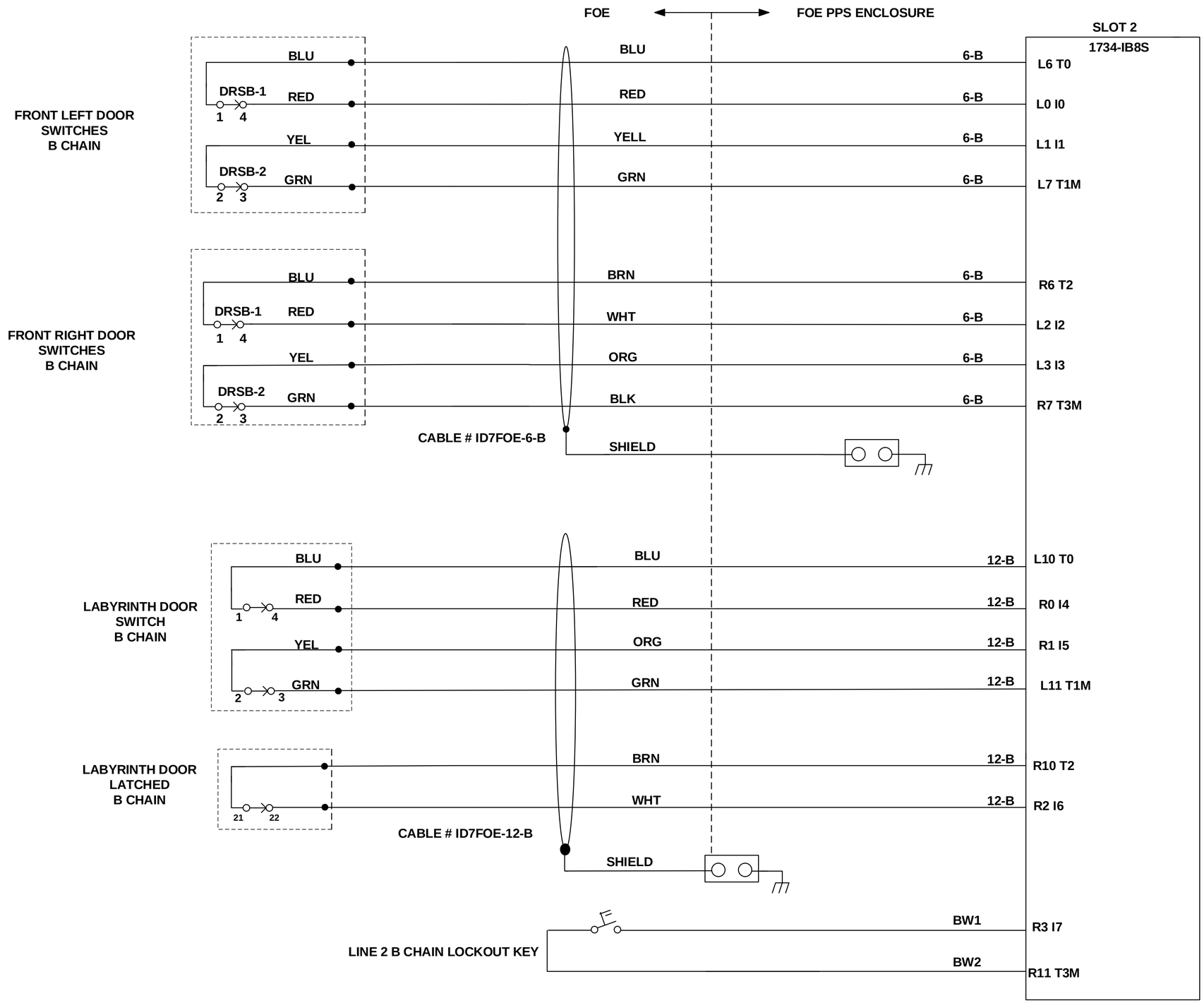


**B**

| LT-EL-BL-EI | LT-EL-BL-EI-PPS-1070-91 | B |
|---|---|---|
| DRAWING DIRECTORY | DRAWING NUMBER | REV |

COMPUTER REPRODUCIBLE | SCALE: N/A | SHEET 23 OF 41

LT-EL-BL-EI-PPS-1070-91

| REV | DESCRIPTION | DATE | BY | CHECKED | APP |
|---|---|---|---|---|---|
| | SEE SHEET 1 | | | | |

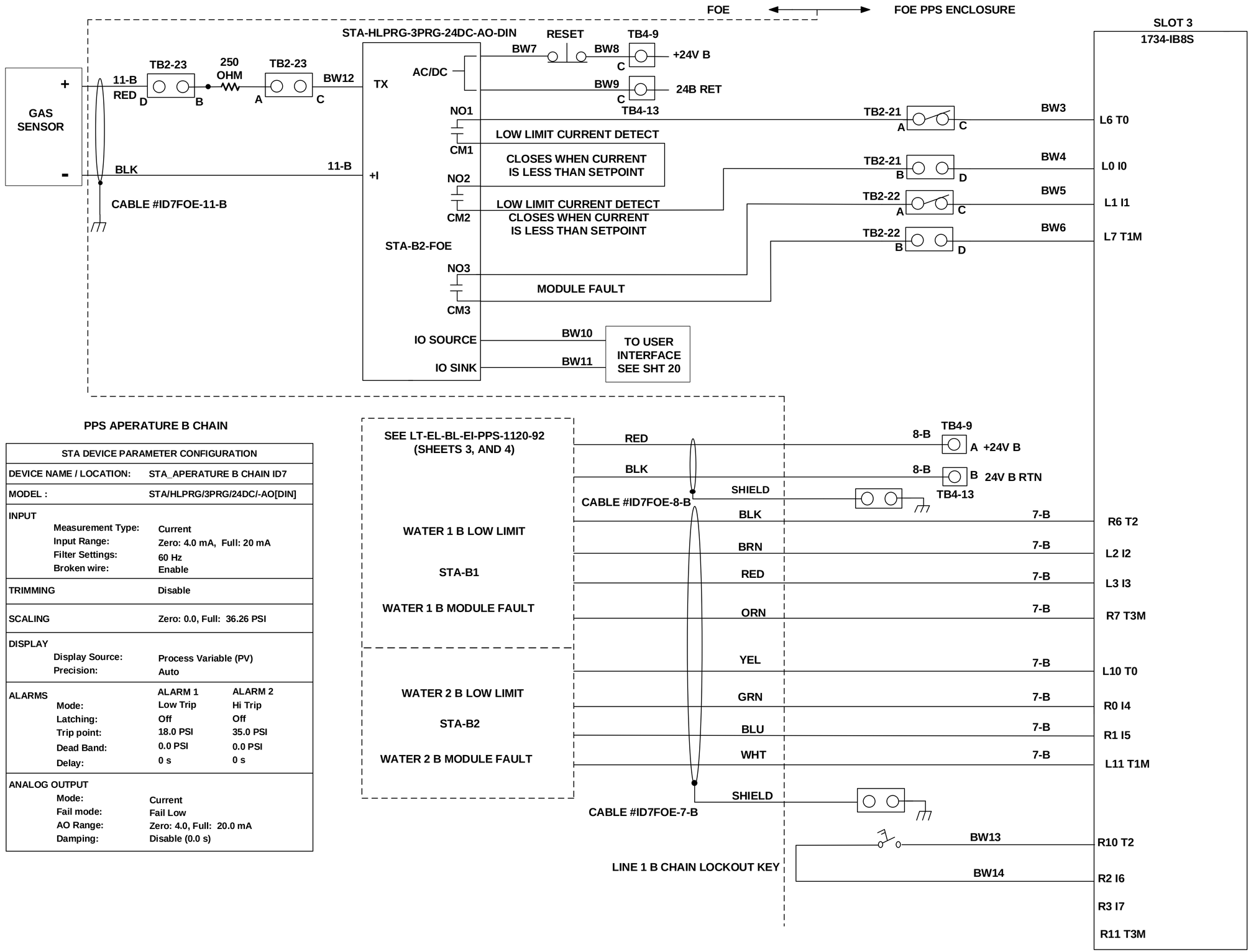


| STA DEVICE PARAMETER CONFIGURATION | | |
|---|---|---|
| DEVICE NAME / LOCATION: | STA_APERATURE B CHAIN ID7 | |
| MODEL : | STA/HLPRG/3PRG/24DC/-AO[DIN] | |
| INPUT | | |
| Measurement Type: | Current | |
| Input Range: | Zero: 4.0 mA, Full: 20 mA | |
| Filter Settings: | 60 Hz | |
| Broken wire: | Enable | |
| TRIMMING | Disable | |
| SCALING | Zero: 0.0, Full: 36.26 PSI | |
| DISPLAY | | |
| Display Source: | Process Variable (PV) | |
| Precision: | Auto | |
| ALARMS | ALARM 1 | ALARM 2 |
| Mode: | Low Trip | Hi Trip |
| Latching: | Off | Off |
| Trip point: | 18.0 PSI | 35.0 PSI |
| Dead Band: | 0.0 PSI | 0.0 PSI |
| Delay: | 0 s | 0 s |
| ANALOG OUTPUT | | |
| Mode: | Current | |
| Fail mode: | Fail Low | |
| AO Range: | Zero: 4.0, Full: 20.0 mA | |
| Damping: | Disable (0.0 s) | |

B

| LT-EL-BL-EI | LT-EL-BL-EI-PPS-1120-91 | B |
|---|---|---|
| DRAWING DIRECTORY | DRAWING NUMBER | REV |
| COMPUTER REPRODUCABLE | SCALE: N/A | SHEET 24 OF 40 |

LT-EL-BL-EI-PPS-1120-91

| REV | DESCRIPTION | DATE | BY | CHECKED | APP |
|---|---|---|---|---|---|
| | SEE SHEET 1 | | | | |

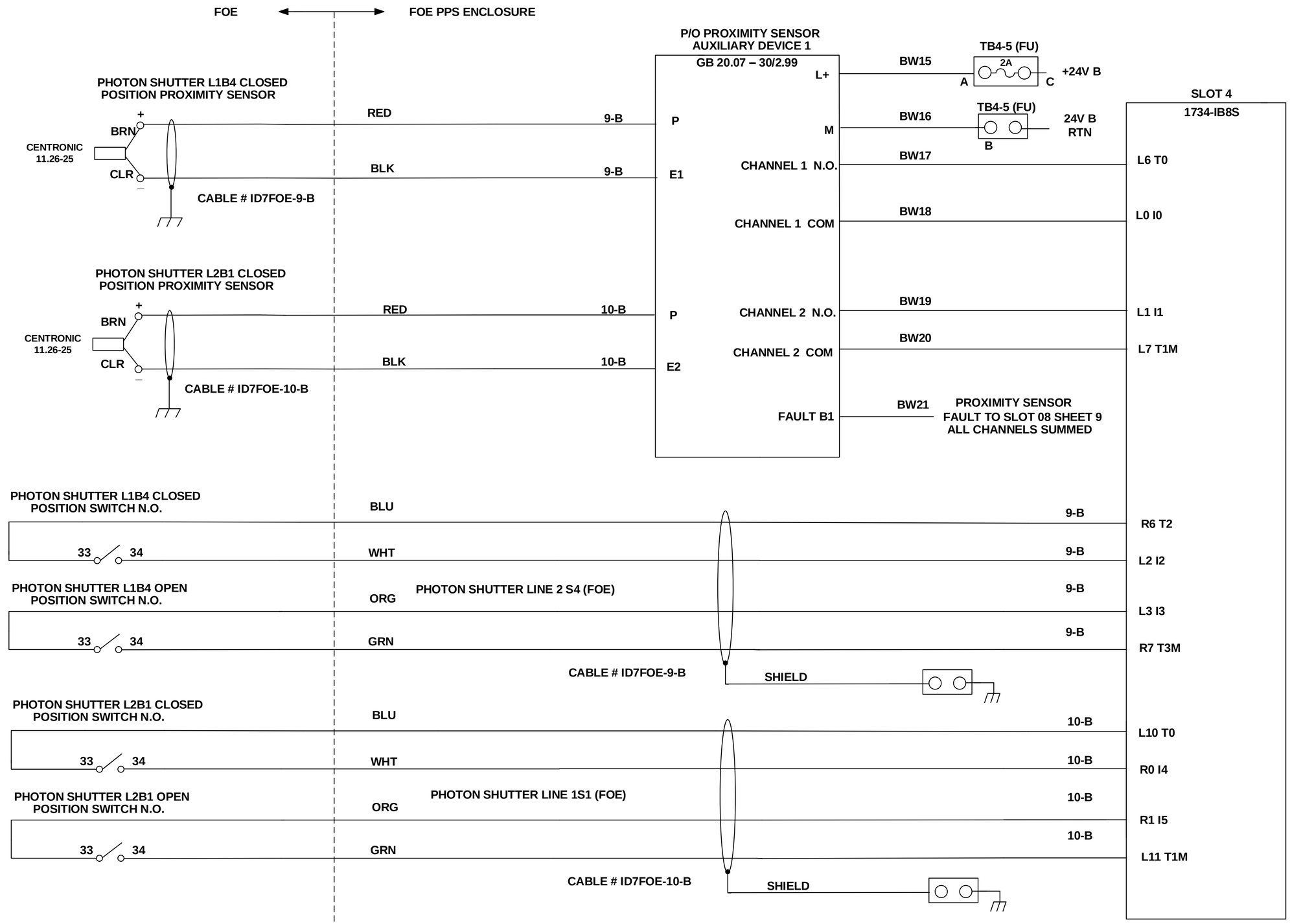


**B**

| LT-EL-BL-EI | LT-EL-BL-EI-PPS-1070-91 | B |
|---|---|---|
| DRAWING DIRECTORY | DRAWING NUMBER | REV |

COMPUTER REPRODUCIBLE | SCALE: N/A | SHEET 25 OF 41

LT-EL-BL-EI-PPS-1070-91

| REV | DESCRIPTION | DATE | BY | CHECKED | APP |
|---|---|---|---|---|---|
| | SEE SHEET 1 | | | | |

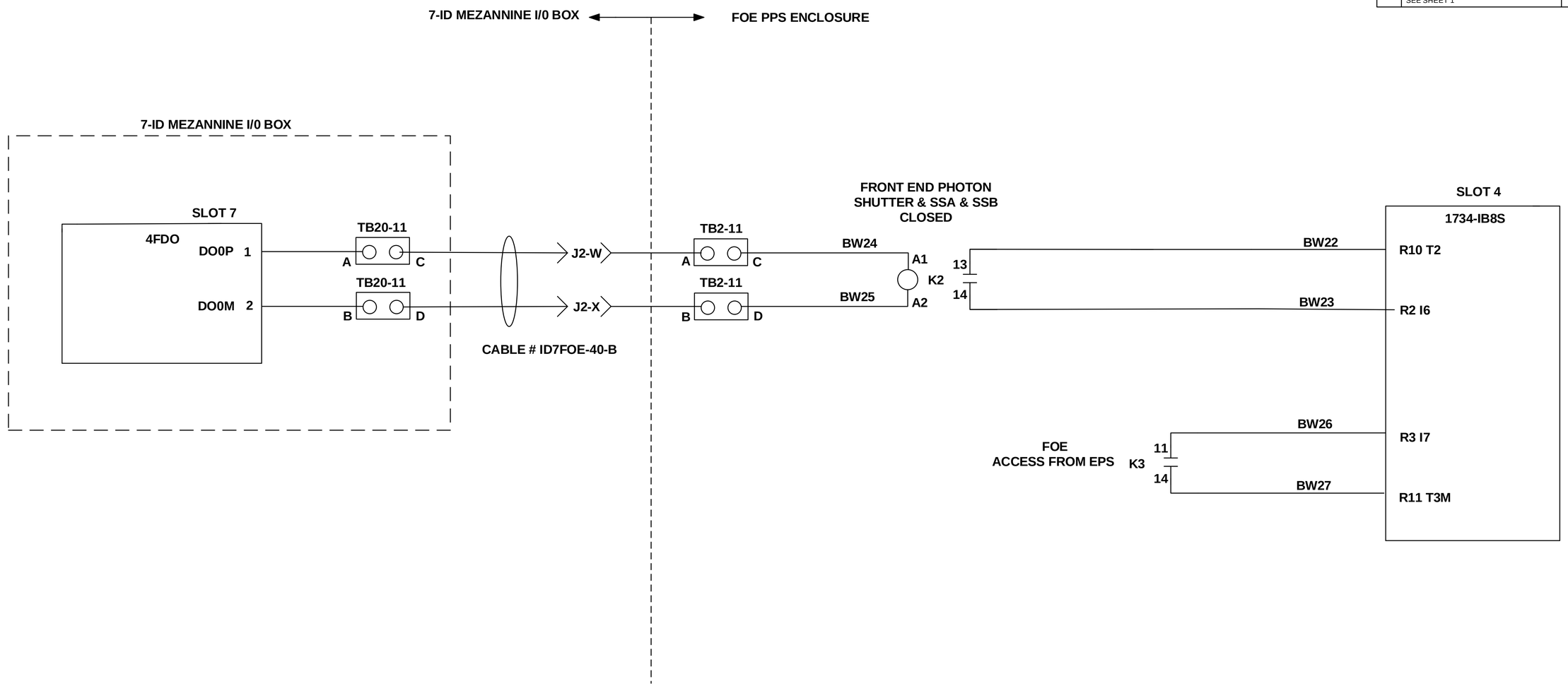


**B**

| LT-EL-BL-EI | LT-EL-BL-EI-PPS-1070-91 | B |
|---|---|---|
| DRAWING DIRECTORY | DRAWING NUMBER | REV |

COMPUTER REPRODUCIBLE | SCALE : N/A | SHEET 26 OF 41

LT-EL-BL-EI-PPS-1070-91

| REV | DESCRIPTION | DATE | BY | CHECKED | APP |
|---|---|---|---|---|---|
| | SEE SHEET 1 | | | | |

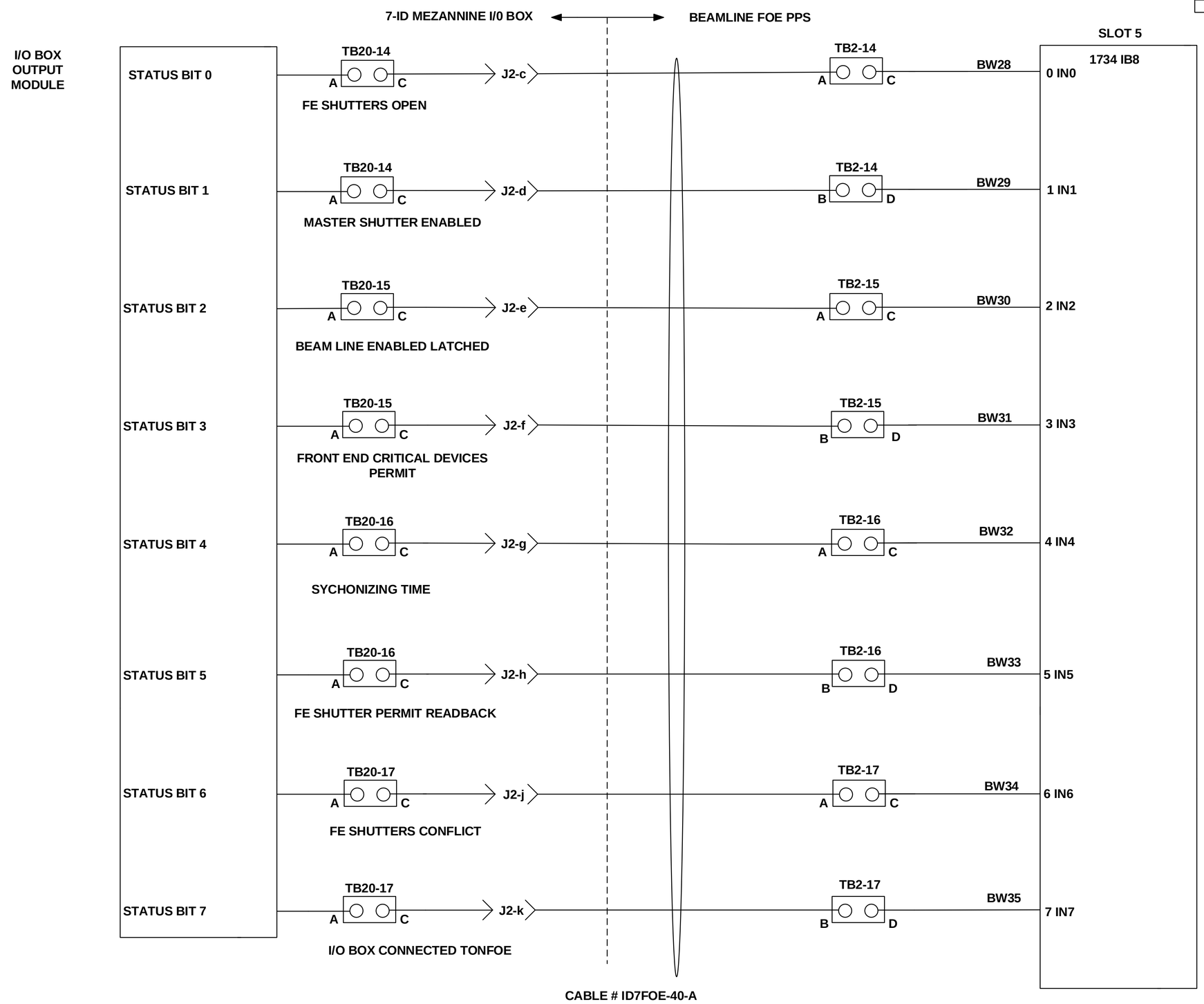


**B**

| LT-EL-BL-EI (DRAWING DIRECTORY) | LT-EL-BL-EI-PPS-1070-91 (DRAWING NUMBER) | B (REV) |
|---|---|---|
| COMPUTER REPRODUCIBLE | SCALE: N/A | SHEET 27 OF 41 |

LT-EL-BL-EI-PPS-1070-91

| REV | DESCRIPTION | DATE | BY | CHECKED | APP |
|---|---|---|---|---|---|
| | SEE SHEET 1 | | | | |

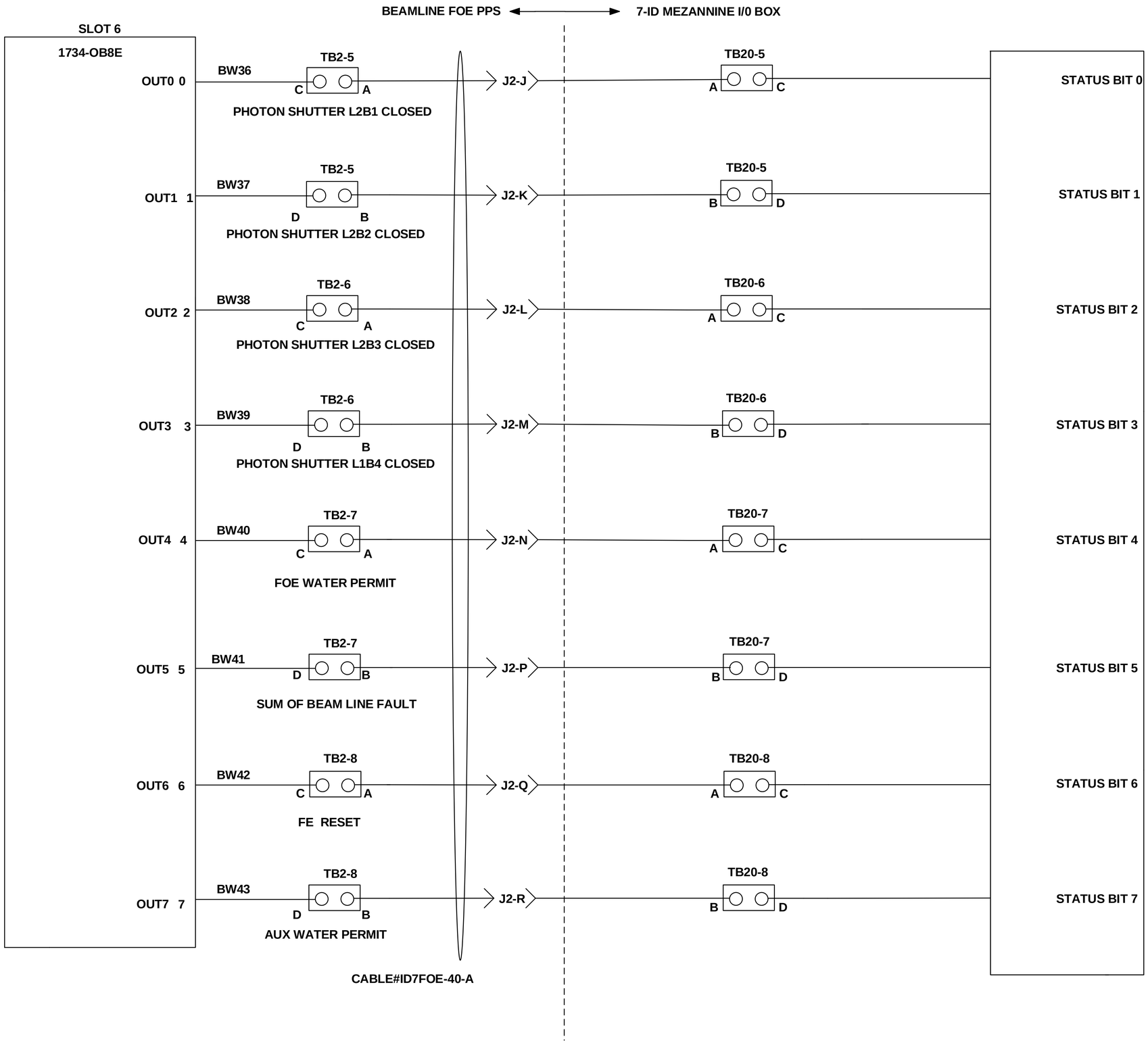


**B**

| LT-EL-BL-EI DRAWING DIRECTORY | LT-EL-BL-EI-PPS-1070-91 DRAWING NUMBER | B REV |
|---|---|---|
| COMPUTER REPRODUCIBLE | SCALE: N/A | SHEET 28 OF 41 |

LT-EL-BL-EI-PPS-1070-91

| REV | DESCRIPTION | DATE | BY | CHECKED | APP |
|---|---|---|---|---|---|
| | SEE SHEET 1 | | | | |

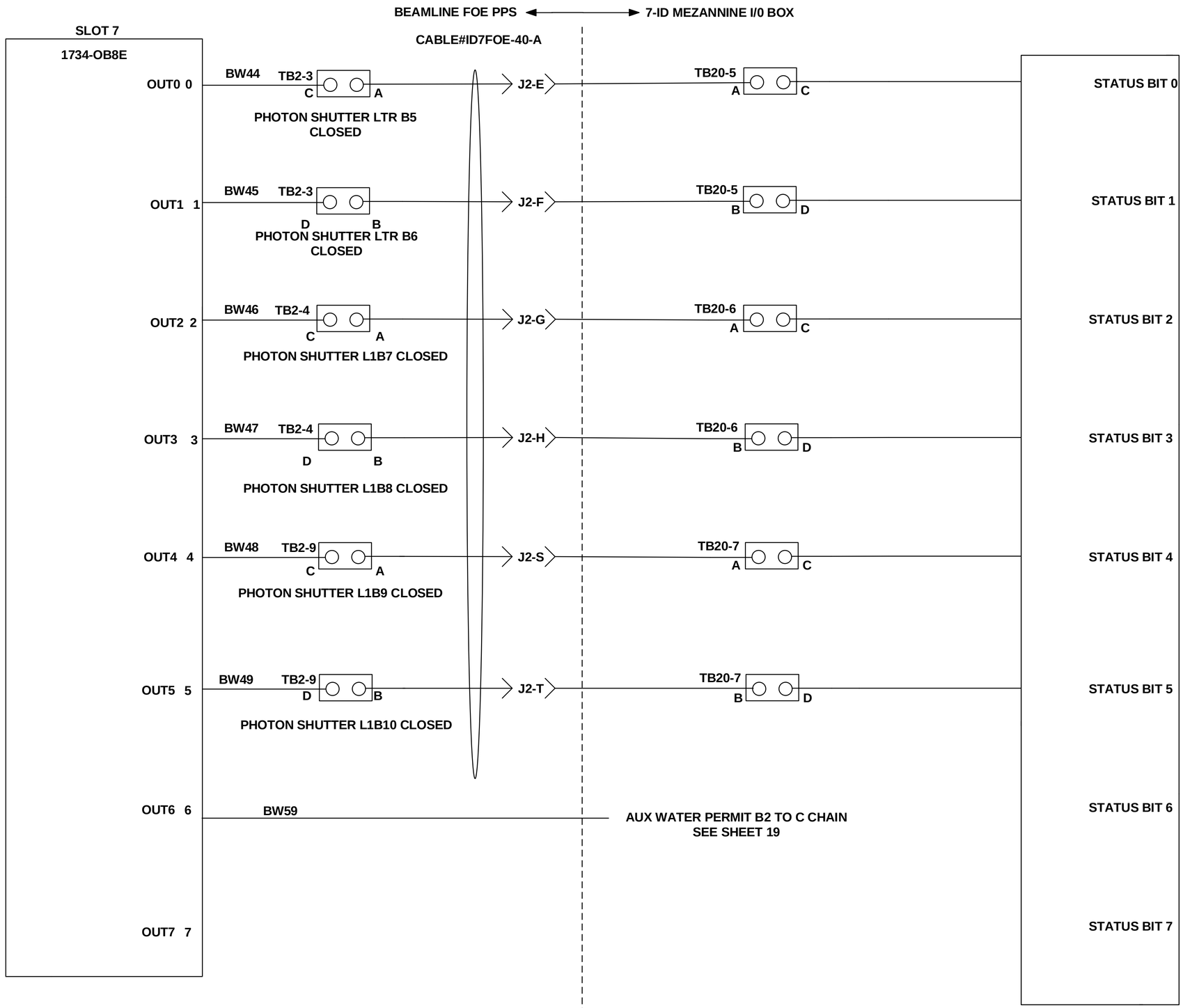


**B**

| LT-EL-BL-EI | LT-EL-BL-EI-PPS-1070-91 | B |
|---|---|---|
| DRAWING DIRECTORY | DRAWING NUMBER | REV |

COMPUTER REPRODUCIBLE | SCALE: N/A | SHEET 29 OF 41

LT-EL-BL-EI-PPS-1070-91

| REV | DESCRIPTION | DATE | BY | CHECKED | APP |
|---|---|---|---|---|---|
| | SEE SHEET 1 | | | | |

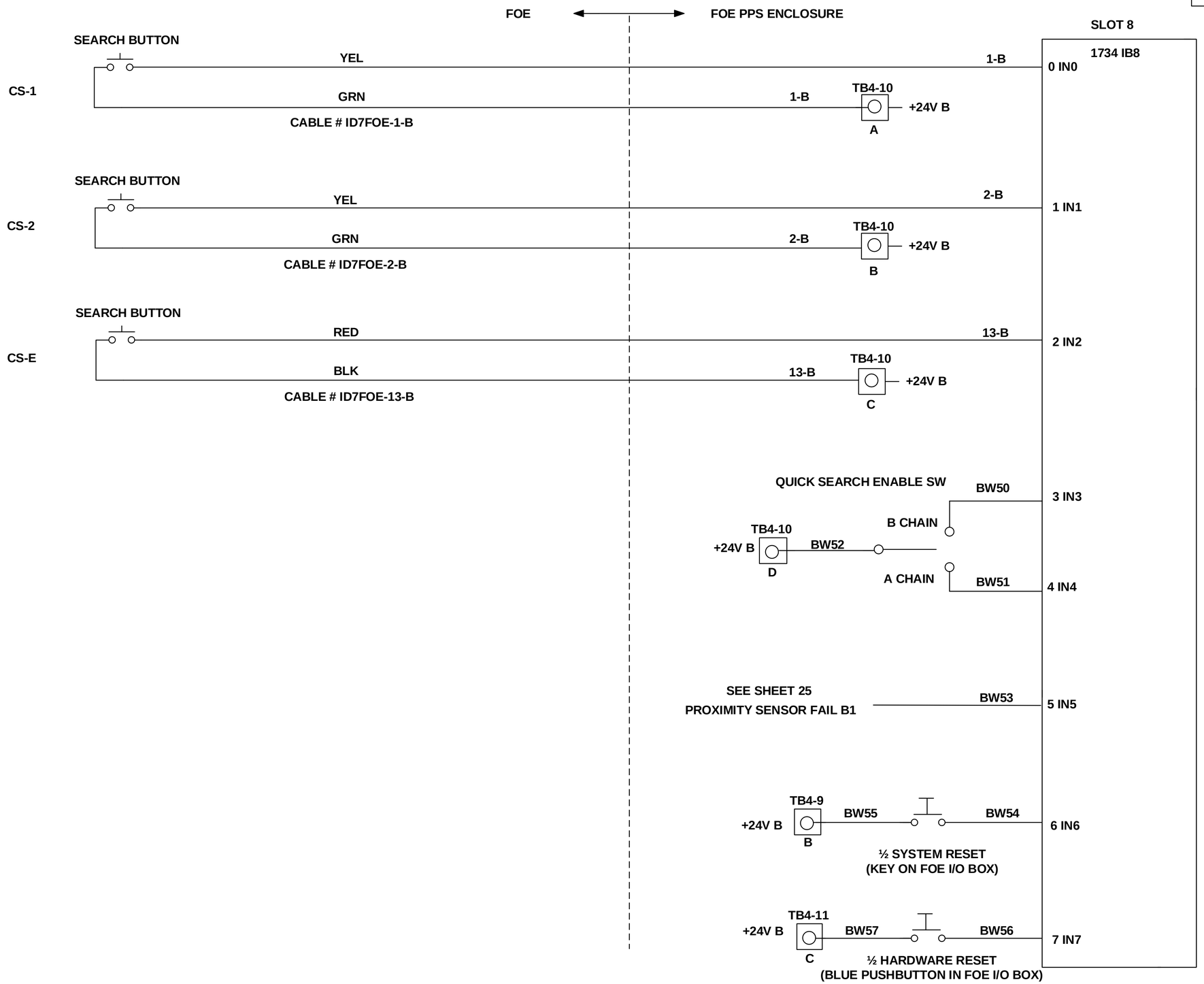


B

| | | |
|---|---|---|
| LT-EL-BL-EI (DRAWING DIRECTORY) | LT-EL-BL-EI-PPS-1070-91 (DRAWING NUMBER) | B (REV) |
| COMPUTER REPRODUCIBLE | SCALE: N/A | SHEET 30 OF 41 |

LT-EL-BL-EI-PPS-1070-91

| REV | DESCRIPTION | DATE | BY | CHECKED | APP |
|---|---|---|---|---|---|
| | SEE SHEET 1 | | | | |

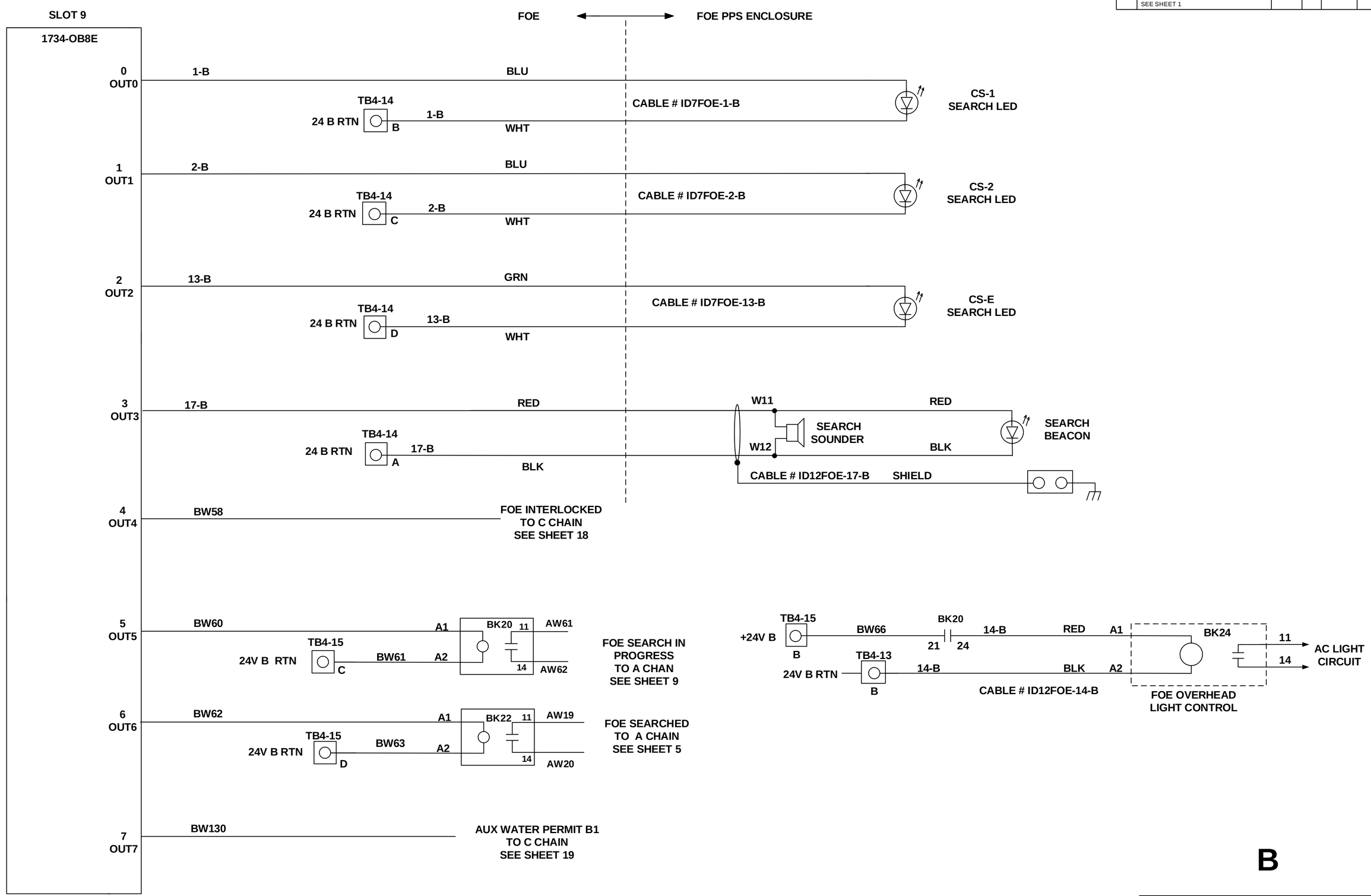


B

| LT-EL-BL-EI | LT-EL-BL-EI-PPS-1070-91 | B |
|---|---|---|
| DRAWING DIRECTORY | DRAWING NUMBER | REV |
| COMPUTER REPRODUCIBLE | SCALE: N/A | SHEET 31 OF 41 |

LT-EL-BL-EI-PPS-1070-91

| REV | DESCRIPTION | DATE | BY | CHECKED | APP |
|---|---|---|---|---|---|
| | SEE SHEET 1 | | | | |

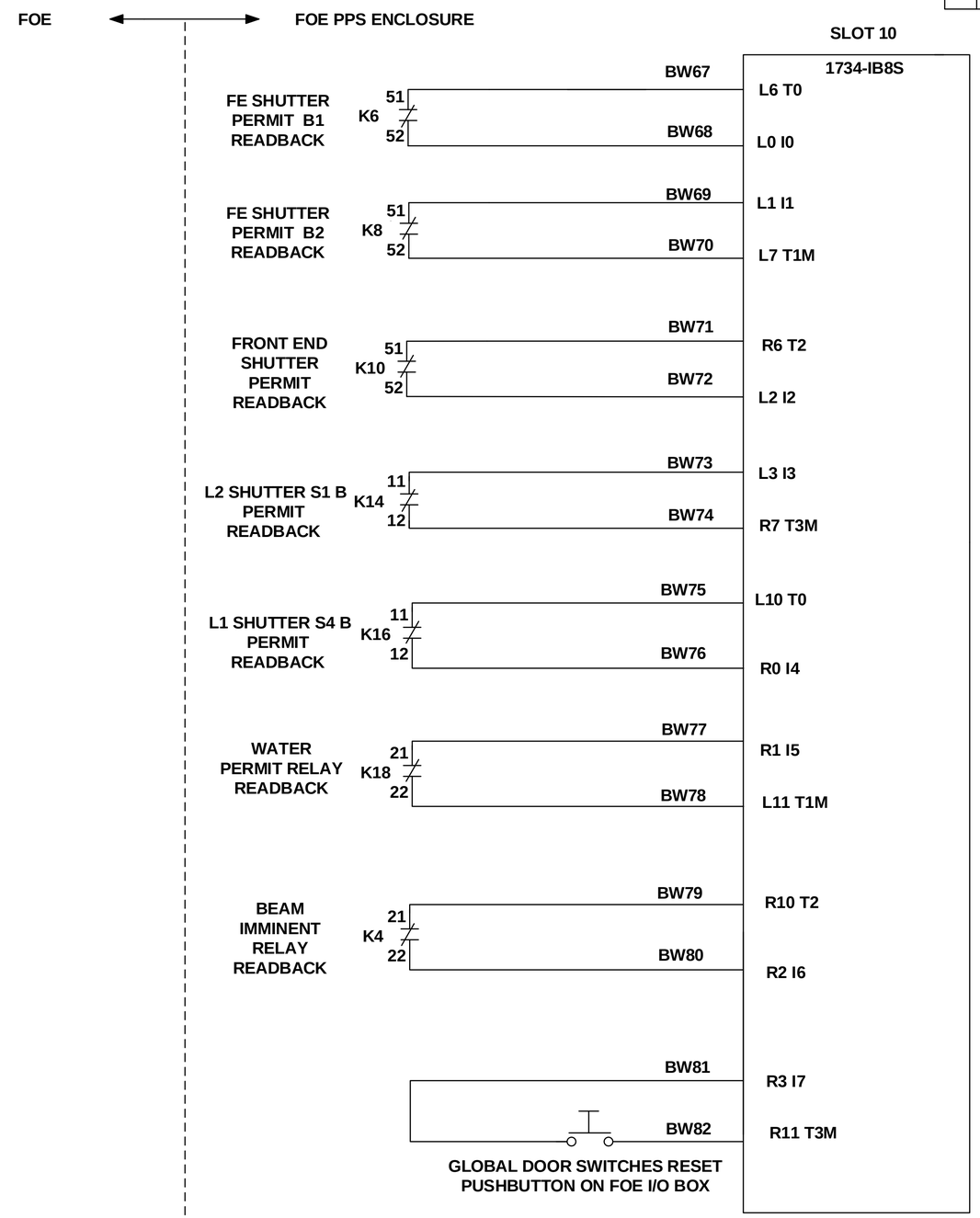


**B**

| | | |
|---|---|---|
| LT-EL-BL-EI<br>DRAWING DIRECTORY | LT-EL-BL-EI-PPS-1070-91<br>DRAWING NUMBER | B<br>REV |
| COMPUTER REPRODUCIBLE | SCALE: N/A | SHEET 32 OF 41 |

LT-EL-BL-EI-PPS-1070-91

| REV | DESCRIPTION | DATE | BY | CHECKED | APP |
|---|---|---|---|---|---|
| | SEE SHEET 1 | | | | |

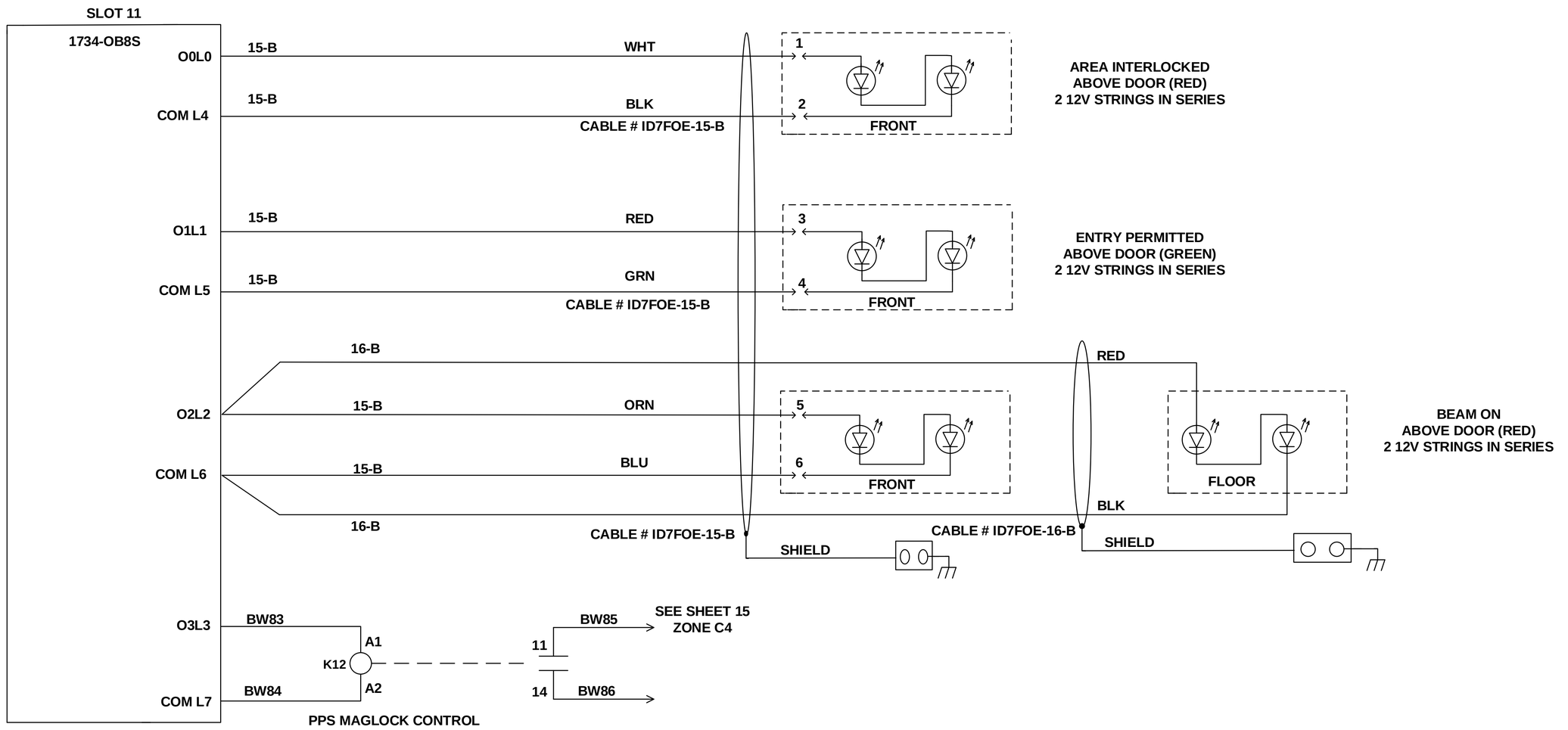


B

| LT-EL-BL-EI | LT-EL-BL-EI-PPS-1070-91 | B |
|---|---|---|
| DRAWING DIRECTORY | DRAWING NUMBER | REV |

COMPUTER REPRODUCIBLE | SCALE: N/A | SHEET 33 OF 41

LT-EL-BL-EI-PPS-1070-91

| REV | DESCRIPTION | DATE | BY | CHECKED | APP |
|---|---|---|---|---|---|
| | SEE SHEET 1 | | | | |

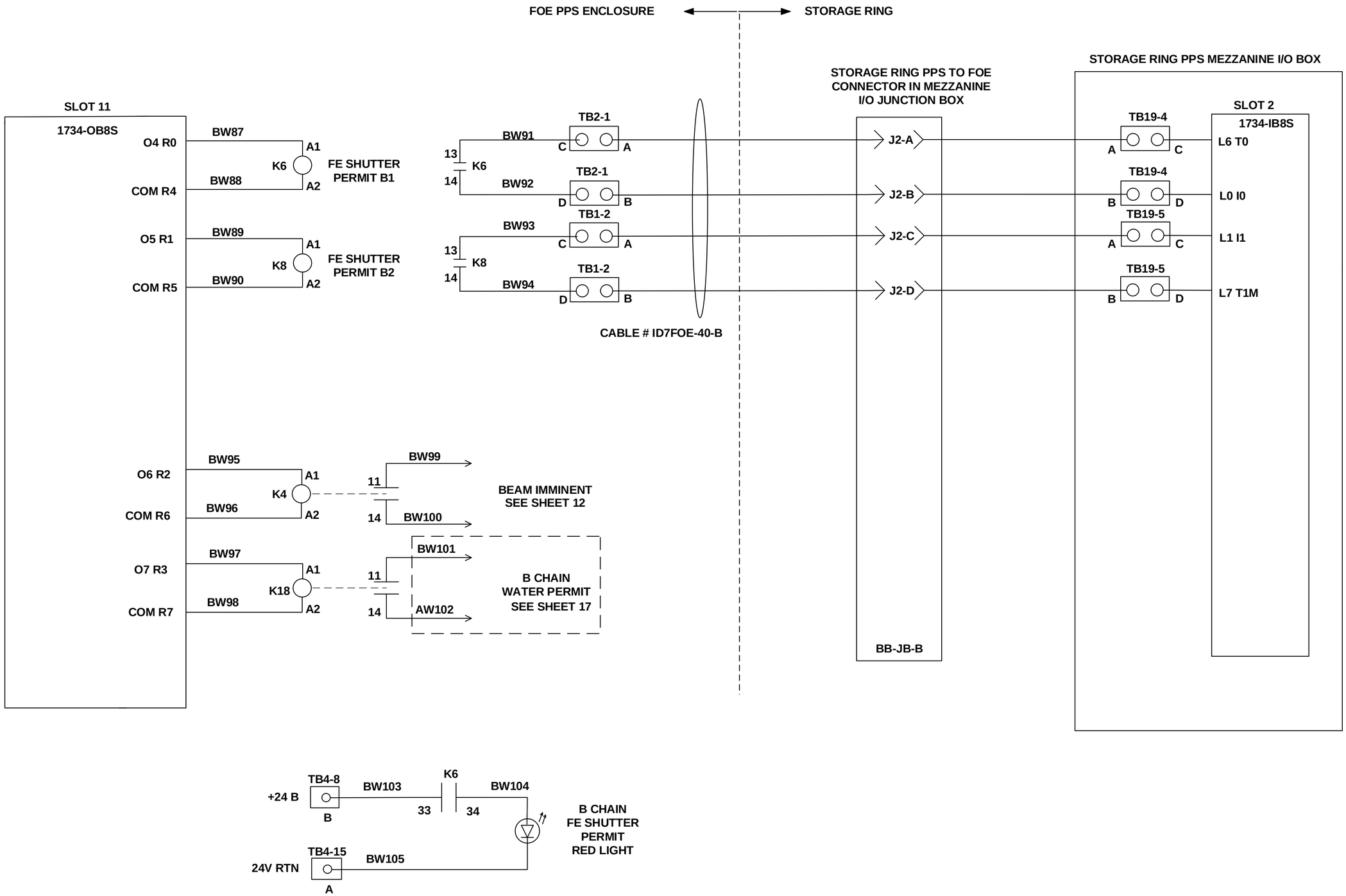


B

| | | |
|---|---|---|
| LT-EL-BL-EI (DRAWING DIRECTORY) | LT-EL-BL-EI-PPS-1070-91 (DRAWING NUMBER) | B (REV) |
| COMPUTER REPRODUCIBLE | SCALE: N/A | SHEET 34 OF 41 |

LT-EL-BL-EI-PPS-1070-91

| REV | DESCRIPTION | DATE | BY | CHECKED | APP |
|---|---|---|---|---|---|
| | SEE SHEET 1 | | | | |

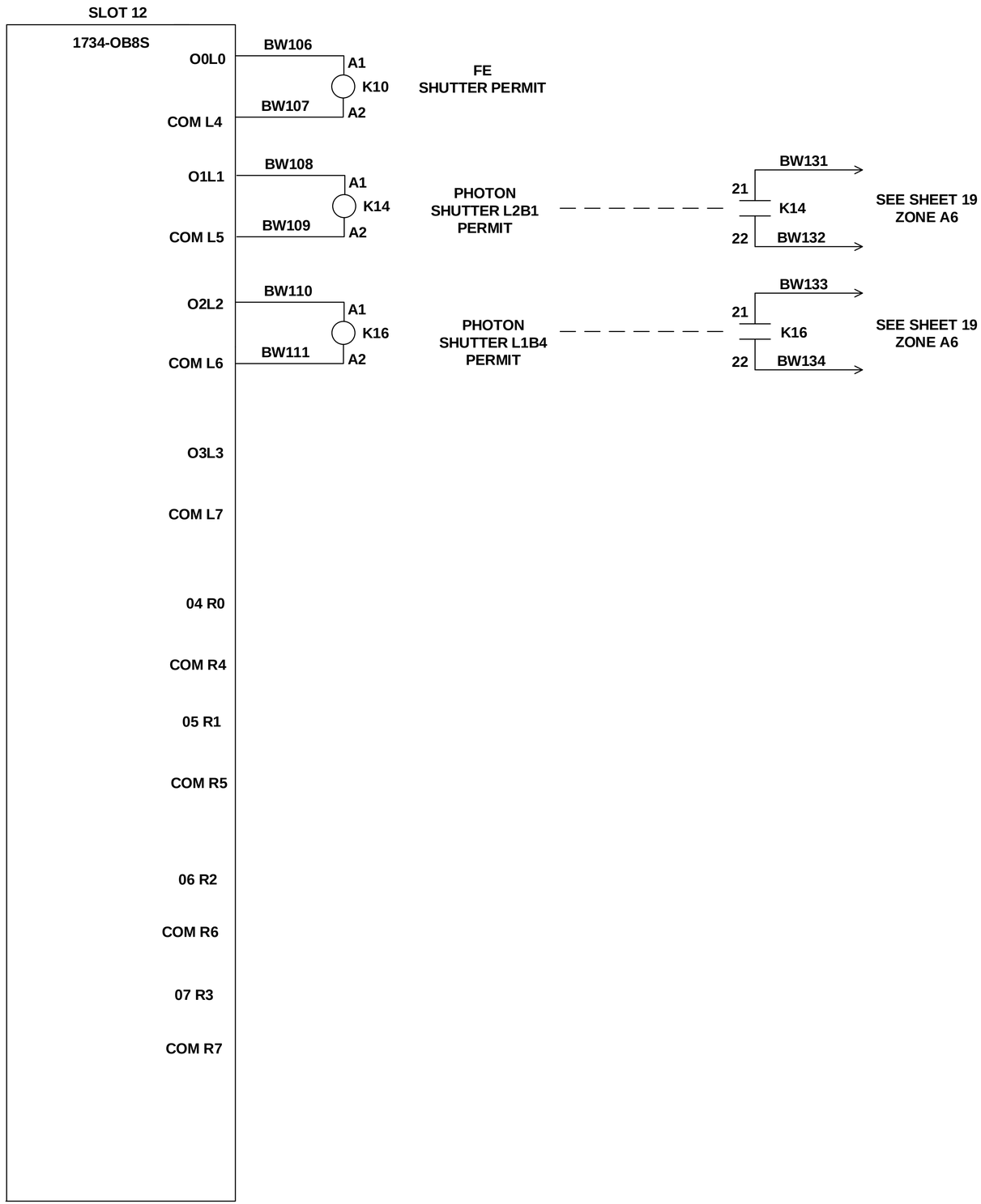


**B**

| LT-EL-BL-EI | LT-EL-BL-EI-PPS-1070-91 | B |
|---|---|---|
| DRAWING DIRECTORY | DRAWING NUMBER | REV |

COMPUTER REPRODUCIBLE | SCALE: N/A | SHEET 35 OF 41

LT-EL-BL-EI-PPS-1070-91

| REV | DESCRIPTION | DATE | BY | CHECKED | APP |
|---|---|---|---|---|---|
| | SEE SHEET 1 | | | | |

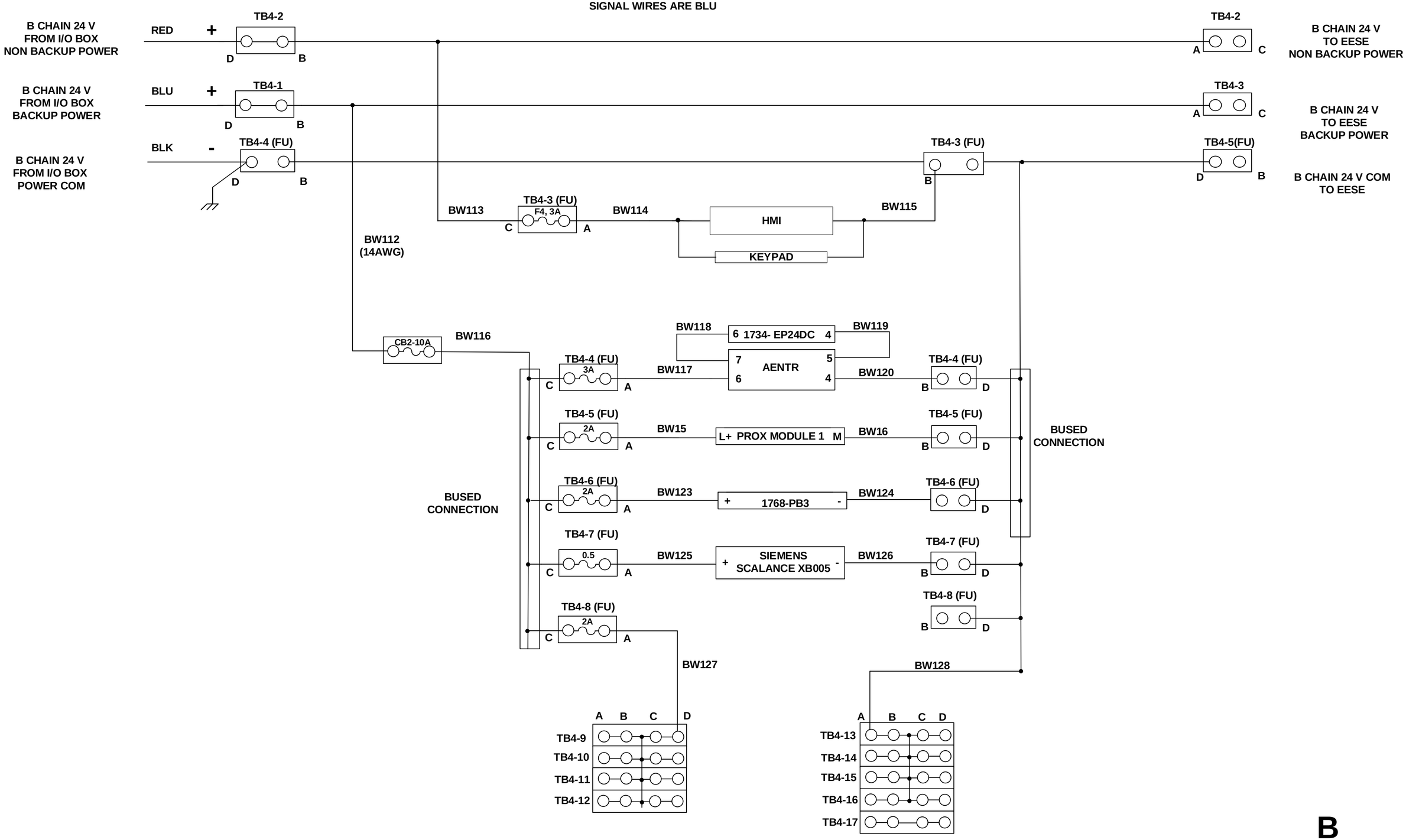


B

| LT-EL-BL-EI | LT-EL-BL-EI-PPS-1070-91 | B |
|---|---|---|
| DRAWING DIRECTORY | DRAWING NUMBER | REV |
| COMPUTER REPRODUCIBLE | SCALE: N/A | SHEET 36 OF 41 |

LT-EL-BL-EI-PPS-1070-91

| REV | DESCRIPTION | DATE | BY | CHECKED | APP |
|---|---|---|---|---|---|
| | SEE SHEET 1 | | | | |

# 7-ID NETWORK LAYOUT

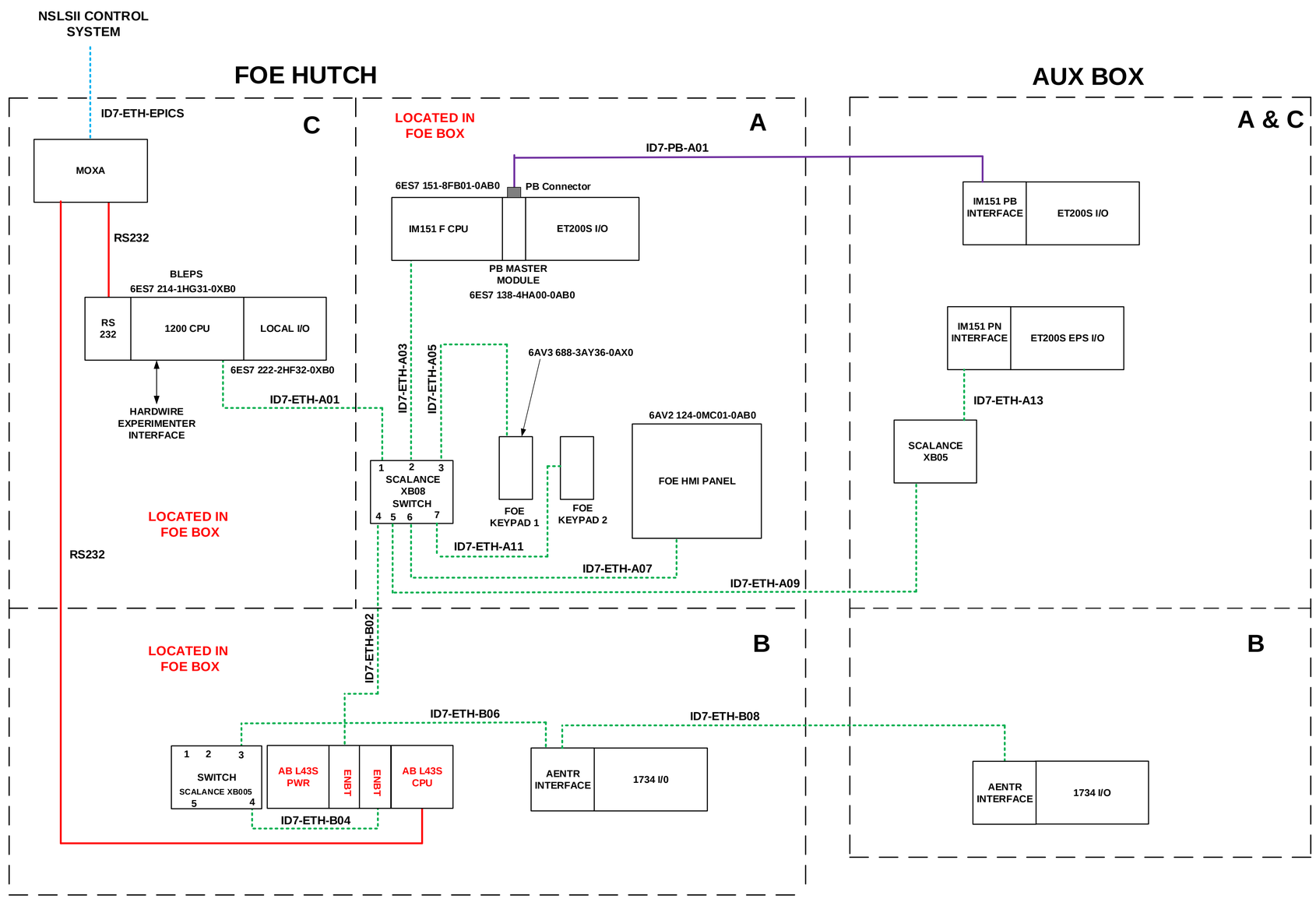


ETHERNET FRONT END SUBNET

ETHERNET BEAMLINE SUBNET

PROFIBUS

RS 232

NOTES:
(1) FOE WATER INTERLOCK IO IS NOT IN ALL BEAMLINE PPS. IF PPS DOES NOT HAS WATER INTERLOCK IO, B CHAIN ETHERNET CABLE NUMBER WILL BE SEQUENTIALLY NAMED AFTER ID7-ETH-004.
(2) BEAM LINE ID7, ID?? HAVE WATER INTERLOCK IO.

| | | |
|---|---|---|
| LT-EL-BL-EI (DRAWING DIRECTORY) | LT-EL-BL-EI-PPS-1070-91 (DRAWING NUMBER) | B (REV) |
| COMPUTER REPRODUCIBLE | SCALE: N/A | SHEET 37 OF 41 |

LT-EL-BL-EI-PPS-1070-91

| REV | DESCRIPTION | DATE | BY | CHECKED | APP |
|---|---|---|---|---|---|
| | SEE SHEET 1 | | | | |

# A CHAIN

## Row 1

CB-1

TB-3

UDK4 End Cover 2775113

End Cap For Fuses: EPDDFL4U

1x Ground 3044092

CIRCUIT BREAKER 10A

5x Fuse Holders DDFL4U

5X UDK4 2775016

1x Ground 3044092

4X UDK4 2775016

1x Ground 3044092

2X UDK4 2775016

UDK4 End Cover 2775113

Siemens IM-151 6ES7-151-8FBOI-0AB0

Profibus 6ES7 138-4HA00-0AB0

Siemens PME 6ES7-193-4CC20-0AA0

4x Dual Slots Siemens 6ES7-193-4CF40-0AA0

6x Single Slot Siemens 6ES7-193-4CA40-0AA0

3x Dual Slots Siemens 6ES7-193-4CF40-0AA0

## Row 2

TB-1

End Block E/UK1

29x Terminal Block UTTB 2,5: 3044636

End Cap For: D-UTTB 2,5/4 3047293

4x Ground 3044092

| K1 | K5 | K13 | K19 | K21 | K15 | K17 | K3 | K7 | K9 | K11 |
|---|---|---|---|---|---|---|---|---|---|---|
| ABB Relay Socket CR-PSS | ABB Relay Socket CR-PSS | ABB Relay Socket CR-PSS | ABB Relay Socket CR-PSS | ABB Relay Socket CR-PSS | IDEC Relay Socket SF1V-4-07L | IDEC Relay Socket SF1V-4-07L | ABB Relay Socket CR-PSS | Altech Relay OA5601 | Altech Relay OA5601 | Altech Relay OA5601 |

TB-5

3X TB Konnect It 3 Circuit KN-TL-14

UDK4 2775016

2X Diode TB UTTB 2.5 2DIO/O-UL/ UR-UL

1x Ground 3044092

Konnect It End Cover KN-EC-TL

UDK4 End Cover 2775113

Diode TB End Cover 3047293

AUX DEVICE A CHAIN

Klaschka D-75242

STA A1

Thermocouple Safety Trip Alarm-Moore: STA/HLPRG/3PRG/24DC-AO

Siemens Scalance XB005

# B CHAIN

## Row 3

CB-1

TB-4

UDK4 End Cover 2775113

End Cap For Fuses: EPDDFL4U

CIRCUIT BREAKER 10A

5x Fuse Holders DDFL4U

3X UDK4 2775016

3X UDK4 2775016

2X UDK4 2775016

UDK4 End Cover 2775113

Allen Bradley Power Supply 1768-PB3 A

Allen Bradley Ethernet/IP Communication Interface 1768 ENBT/A

Allen Bradley Ethernet/IP Communication Interface 1768 ENBT/A

Allen Bradley Compact Guard Logix 1768-L43S/B

Allen Bradley End Cap 1769-ECR

| K6 | K8 | K10 |
|---|---|---|
| Phoenix PSR-SCF 24UC Safety Relay Socket 2981444 | Phoenix PSR-SCF 24UC Safety Relay Socket 2981444 | Phoenix PSR-SCF 24UC Safety Relay Socket 2981444 |

A HW RESET

B HW RESET

QUICK SEARCH

Amphenol Connector 97-4102A-20-27P

Push Button GCX1114 Front Fixing Adapter M22-IVS Contact Block ECX1040-5

NKK SWITCHES S7F

## Row 4

TB-2

End Block E/UK1

23x Terminal Block UTTB 2,5: 3044636

End Cap For: D-UTTB 2,5/4 3047293

4x Ground 3044092

| K2 | K4 | K12 | K18 | K20 | K22 | K24 | K14 | K16 |
|---|---|---|---|---|---|---|---|---|
| Relay Socket ES 50 | Relay Socket ES 50 | Relay Socket ES 50 | Relay Socket ES 50 | Relay Socket ES 50 | Relay Socket ES 50 | Relay Socket ES 50 | Elesta Relay Socket SRD-SIM4 H300725 | Elesta Relay Socket SRD-SIM4 H300725 |

Allen Bradley 1734 AENTR Ethernet Interface

10x Single Slots Allen Bradley 1734-Top3

Power Module 1734 EP24DC

8x Single Slots Allen Bradley 1734-Top3

LT-EL-BL-EI-PPS-1070-91

| DRAWING DIRECTORY | DRAWING NUMBER | REV |
|---|---|---|
| LT-EL-BL-EI | LT-EL-BL-EI-PPS-1070-91 | B |

COMPUTER REPRODUCIBLE | SCALE: N/A | SHEET 38 OF 41

| REV | DESCRIPTION | DATE | BY | CHECKED | APP |
|---|---|---|---|---|---|
| | SEE SHEET 1 | | | | |

# Row 5

## TB 7

End Cap For Fuses: EPDDFL4U

End Clamp E/UK 1

3x Fuse Holders DDFL4U

5X UDK4 2775016

1x Ground 3044092

3X UDK4 2775016

3x Ground 3044092

PHOENIX CONTACT PLC-BCS-24DC/21

Siemens Scalance XB008

Siemens CM 1241-RS232

Siemens Simatic S7-1200-CPU-1215C DC/DC/RLY

Siemens SM 1223 DC/RLY

Siemens SM 1223 DC/DC

Siemens SM 1223 DC/RLY

Siemens SM 1223 DC/RLY

MOXA Nport IA5-250A

## AUX DEVICE B CHAIN

Klaschka D-75242

## STA B1

Thermocouple Safety Trip Alarm-Moore: STA/HLPRG/3PRG/24DC-AO

LT-EL-BL-EI-PPS-1070-91

| | | |
|---|---|---|
| LT-EL-BL-EI<br>DRAWING DIRECTORY | LT-EL-BL-EI-PPS-1070-91<br>DRAWING NUMBER | B<br>REV |
| COMPUTER REPRODUCIBLE | SCALE : N/A | SHEET 39 OF 41 |

| REV | DESCRIPTION | DATE | BY | CHECKED | APP |
|---|---|---|---|---|---|
| | SEE SHEET 1 | | | | |

| ROW 1: | | | | | | |
|---|---|---|---|---|---|---|
| | | | | | | |
| | [20] | | | | | |
| | [2] | | | | | |
| CB 1 | WMZS1B10 | N/A | Circuit Breaker B10 | Eaton | | |
| TB 3 | [19] | x2 [13] | [6] | x6 [8] | | |
| | [19] | x3 [13] | [2] | [19] | x4 [13] | [2] |
| | | | | | | |
| SLOT | MODULE | SOCKET | DESCRIPTION | VENDOR | | |
| | 6ES7-151-8FB00-0AB0 | N/A | 1-151-8F ETHERNET INTERFAC | SIEMENS | | |
| | 6ES7-138-4HA00-0AB0 | N/A | DP MASTER | SIEMENS | | |
| 1 | 6ES7-138-4CA50-0AB0 | 6ES7-193-4CC20-0AA0 | POWER MODULE PM-E | SIEMENS | | |
| 2 | 6ES7-138-4FA04-0AB0 | 6ES7-193-4CF40-0AA0 | 4/8FDI SAFETY INPUT | SIEMENS | | |
| 3 | 6ES7-138-4FA04-0AB0 | 6ES7-193-4CF40-0AA0 | 4/8FDI SAFETY INPUT | SIEMENS | | |
| 4 | 6ES7-138-4FA04-0AB0 | 6ES7-193-4CF40-0AA0 | 4/8FDI SAFETY INPUT | SIEMENS | | |
| 5 | 6ES7-131-4BF00-0AB0 | 6ES7-193-4CA40-0AA0 | 8DI STANDARD IN | SIEMENS | | |
| 6 | 6ES7-138-4CA50-0AB0 | 6ES7-193-4CC20-0AA0 | POWER MODULE PM-E | SIEMENS | | |
| 7 | 6ES7-132-4BF00-0AA0 | 6ES7-193-4CA40-0AA0 | 8DO STANDARD OUT | SIEMENS | | |
| 8 | 6ES7-131-4BF00-0AB0 | 6ES7-193-4CA40-0AA0 | 8DI STANDARD IN | SIEMENS | | |
| 9 | 6ES7-131-4BF00-0AB0 | 6ES7-193-4CA40-0AA0 | 8DI STANDARD IN | SIEMENS | | |
| 10 | 6ES7-132-4BF00-0AA0 | 6ES7-193-4CA40-0AA0 | 8DO STANDARD OUT | SIEMENS | | |
| 11 | 6ES7-138-4FB03-0AB0 | 6ES7-193-4CF40-0AA0 | 4FDO SAFETY OUTPUT | SIEMENS | | |
| 12 | 6ES7-138-4FB03-0AB0 | 6ES7-193-4CF40-0AA0 | 4FDO SAFETY OUTPUT | SIEMENS | | |
| 13 | 6ES7-138-4FB03-0AB0 | 6ES7-193-4CF40-0AA0 | 4FDO SAFETY OUTPUT | SIEMENS | | |
| 14 | 6ES7-193-4JA00-0AA0 | N/A | SOCKET COVER | SIEMENS | | |
| K22 | PLC-RSC-24DC/21AU | | RELAY | PHOENIX | | |
| K25 | PLC-RSC-24DC/21AU | | RELAY | PHOENIX | | |
| K29 | PLC-RSC-24DC/21AU | | RELAY | PHOENIX | | |
| | | | | | | |
| ROW 2: | | | | | | |
| | | | | | | |
| TB 1 | [2] | [2] | [20] | x81 [1] | [2] | [2] |
| | | | | | | |
| RELAY | MODULE | SOCKET | DESCRIPTION | VENDOR | | |
| K1 | OW5669.12/983/61 | RT 78626 | RELAY | SHRACK | | |
| K3 | OW5669.12/983/61 | RT 78626 | RELAY | SHRACK | | |
| K5 | OW5669.12/983/61 | RT 78626 | RELAY | SHRACK | | |
| K13 | OW5669.12/983/61 | RT 78626 | RELAY | SHRACK | | |
| K15 | RF1V-3A1BL-D24 | SF1V-4-07L | RELAY | IDEC | | |
| K17 | RF1V-3A1BL-D24 | SF1V-4-07L | RELAY | IDEC | | |
| K7 | OA5601 | N/A | ALTECH RELAY | BNL | | |
| K9 | OA5601 | N/A | ALTECH RELAY | BNL | | |
| K11 | OA5601 | N/A | ALTECH RELAY | BNL | | |

| ROW 3: | | | | | | |
|---|---|---|---|---|---|---|
| | [20] | | | | | |
| | [2] | | | | | |
| CB 2 | WMZS1B10 | N/A | Circuit Breaker B10 | Eaton | | |
| TB 4 | [19] | x2 [13] | [6] | x4 [8] | | |
| | [19] | x3 [13] | [2] | [19] | x3 [13] | [2] |
| | | | | | | |
| SLOT | MODULE | SOCKET | DESCRIPTION | VENDOR | | |
| | 1734-AENTR | N/A | 24V DC EHTERNET ADAPTER | AB | | |
| 1 | 1734-IB8S | 1734-TOP3 (2) | 8 INPUT SAFETY | AB | | |
| 2 | 1734-IB8S | 1734-TOP3 (2) | 8 INPUT SAFETY | AB | | |
| 3 | 1734-IB8S | 1734-TOP3 (2) | 8 INPUT SAFETY | AB | | |
| 4 | 1734-IB8S | 1734-TOP3 (2) | 8 INPUT SAFETY | AB | | |
| 5 | 1734-IB8 | 1734-TOP3 | STANDARD 8 INPUT MODULE | AB | | |
| 6 | 1734-EP24DC | N/A | POWER MODULE PM-E | AB | | |
| | 1734-OB8E | 1734-TOP3 | 8 CURRENT SOURCE | AB | | |
| 7 | 1734-IB8 | 1734-TOP3 | STANDARD 8 INPUT MODULE | AB | | |
| 8 | 1734-IB8S | 1734-TOP3 (2) | 8 INPUT SAFETY | AB | | |
| 9 | 1734-OW4 | 1734-TOP3 | 4 FORM RELAY MODULE | AB | | |
| 10 | 1734-OW4 | 1734-TOP3 | 4 FORM RELAY MODULE | AB | | |
| 11 | 1734-OB8S | 1734-TOP3 (2) | 8 OUTPUT SAFETY | AB | | |
| 12 | 1734-OB8S | 1734-TOP3 (2) | 8 OUTPUT SAFETY | AB | | |
| | | | | | | |
| | | | | | | |
| | [2] | [2] | | | | |
| AMPLIFIER | ZSS2/b00ca-1.68 | N/A | SENSOR SWITCH AMPLIFIER | KLASCHKA | | |
| AMPLIFIER | ZSS2/b00ca-1.68 | N/A | SENSOR SWITCH AMPLIFIER | KLASCHKA | | |
| | | | | | | |
| TB 5 | [15] | x3 [14] | [19] | [13] | x4 [16] | [17] |
| | | | | | | |
| RELAY | MODULE | SOCKET | DESCRIPTION | VENDOR | | |
| K19 | OW5669.12/983/61 | RT 78626 | RELAY | SHRACK | | |
| K21 | OW5669.12/983/61 | RT 78626 | RELAY | SHRACK | | |
| K23 | OW5669.12/983/61 | RT 78626 | RELAY | SHRACK | | |
| | [2] | [2] | | | | |
| | [20] | | | | | |
| ROW 4: | | | | | | |
| | [20] | | | | | |
| | [2] | [2] | [2] | [2] | | |
| TB 2 | [3] | x70 [1] | | | | |
| | [2] | [2] | [2] | | | |
| | | | | | | |
| RELAY | MODULE | SOCKET | DESCRIPTION | VENDOR | | |
| K2 | SGR282Z | RT 78626 | RELAY | SHRACK | | |
| K4 | SGR282Z | RT 78626 | RELAY | SHRACK | | |
| K12 | SGR282Z | RT 78626 | RELAY | SHRACK | | |
| K18 | SGR282Z | RT 78626 | RELAY | SHRACK | | |
| K14 | SIM222 24VDC | SRD-SIM4 | 24V RELAY | ELESTA | | |
| K16 | SIM222 24VDC | SRD-SIM4 | 24V RELAY | ELESTA | | |
| K6 | 2981444 | | PSR-SCF 24UC SAFETY RELAY | PHOENIX | | |
| K8 | 2981444 | | PSR-SCF 24UC SAFETY RELAY | PHOENIX | | |
| K10 | 2981444 | | PSR-SCF 24UC SAFETY RELAY | PHOENIX | | |

LT-EL-BL-EI-PPS-1070-91

| LT-EL-BL-EI (DRAWING DIRECTORY) | LT-EL-BL-EI-PPS-1070-91 (DRAWING NUMBER) | B (REV) |
|---|---|---|
| COMPUTER REPRODUCIBLE | SCALE : N/A | SHEET 40 OF 41 |

| REV | DESCRIPTION | DATE | BY | CHECKED | APP |
|---|---|---|---|---|---|
| | SEE SHEET 1 | | | | |

| 7-ID FOE CABLE LIST | | | | |
|---|---|---|---|---|
| Cable Num. | CHAIN | From LOCATION | To LOCATION | Conductors Needed |
| ID7FOE-1-A | A | FOE | CS1 Emergency stop | 6 |
| ID7FOE-1-B | B | FOE | CS1 (Emergency stop/SB1/LED) | 8 |
| ID7FOE-2-A | A | FOE | CS2 Emergency stop | 6 |
| ID7FOE-2-B | B | FOE | CS2 (Emergency stop/SB2/LED) | 8 |
| ID7FOE-3-A | A | FOE | Emergency Access E-Stop | 6 |
| ID7FOE-3-B | B | FOE | Emergency Access E-Stop | 6 |
| ID7FOE-4-A | A | FOE | FRONT Left Mag Lock Switch/Coil | 4 |
| ID7FOE-4-B | B | FOE | FRONT Left REED Switch(In Maglock) | 2 |
| ID7FOE-5-A | A | FOE | FRONT Right Mag Lock Switch/Coil | 4 |
| ID7FOE-5-B | B | FOE | FRONT Right REED Switch(In Maglock) | 2 |
| ID7FOE-6-A | A | FOE | FRONT Left & Right Door Switches | 8 |
| ID7FOE-6-B | B | FOE | FRONT Left & Right Door Switches | 8 |
| ID7FOE-7-A | A | FOE | PPS Water Interlock A (Channels 1&2) | 8 |
| ID7FOE-7-B | B | FOE | PPS Water Interlock B (Channels 1&2) | 8 |
| ID7FOE-8-A | A | FOE | Water Box Power A | 2 |
| ID7FOE-8-B | B | FOE | Water Box Power B | 2 |
| ID7FOE-9-A | A | FOE | Photon shutter A L1S1 Proximity sensor, OPEN and Closed Switches | 6 |
| ID7FOE-9-B | B | FOE | Photon shutter B L1S1 Proximity sensor, OPEN and Closed Switches | 6 |
| ID7FOE-10-A | A | FOE | Photon shutter A L2S4 Proximity sensor, OPEN and Closed Switches | 6 |
| ID7FOE-10-B | B | FOE | Photon shutter B L2S4 Proximity sensor, OPEN and Closed Switches | 6 |
| ID7FOE-11-A | A | FOE | Gas Sensor Power | 2 |
| ID7FOE-11-B | B | FOE | Gas Sensor Power | 2 |
| ID7FOE-12-A | A | FOE | Labyrinth switches & Latch | 6 |
| ID7FOE-12-B | B | FOE | Labyrinth switches & Latch | 6 |
| ID7FOE-13-A | A | FOE | Access To Chain | 2 |
| ID7FOE-13-B | B | FOE | CSE Btn & LED | 4 |
| ID7FOE-14-A | A | FOE | SPARE | |
| ID7FOE-14-B | B | FOE | OverHead Lights | 2 |
| ID7FOE-15-A | A | FOE | FOE A Chain Interlock, Entry Permit, Beam On Signs | 6 |
| ID7FOE-15-B | B | FOE | FOE B Chain Interlock, Entry Permit, Beam On Signs | 6 |
| ID7FOE-16-A | A | FOE | Floor Beam ON Sign | 2 |
| ID7FOE-16-B | B | FOE | Floor Beam ON Sign | 2 |
| ID7FOE-17-A | A | FOE | Beam Imminent Beacon & Sounder | 4 |
| ID7FOE-17 -B | B | FOE | Search Sounder | 2 |
| ID7FOE-18-A | A | FOE | Photon shutter L1A1 solenoid | 2 |
| ID7FOE-18-B | B | FOE | Photon shutter L1B1 solenoid | 2 |
| ID7FOE-19-A | A | FOE | Photon shutter L2A4 solenoid | 2 |
| ID7FOE-19-B | B | FOE | Photon shutter L2B4 solenoid | 2 |
| ID7FOE-20-A | A | FOE | Door Opener Inhibit to Door Controller +SPARE | 4 |
| ID7FOE-20-B | B | FOE | SPARE | |
| ID7FOE-21-A | A | FOE | SPARE | |
| ID7FOE-21-B | B | FOE | SPARE | |
| ID7FOE-22-A | A | FOE | SPARE | |
| ID7FOE-22-B | B | FOE | SPARE | |
| ID7FOE-40-A | A | FOE | Storage Ring PPS IO BOX | 39 |
| ID7FOE-40-B | B | FOE | Storage Ring PPS IO BOX | 39 |
| SPARE | | | | |
| ID7EPS-1 | | EPS | Photon shutter L1A1 Open/Closed switches for EPS | 4 |
| ID7EPS-2 | | EPS | Photon shutter L1B1 Open/Closed switches for EPS | 4 |
| ID7EPS-3 | | EPS | Photon shutter L2A4 Open/Closed switches for EPS | 4 |
| ID7EPS-4 | | EPS | Photon shutter L2B4 Open/Closed switches for EPS | 4 |
| ID7EPS-5 | | EPS | Experimenter Bypass to GV2 +SPARE | 4 |
| ID7EPS-6 | | EPS | SPARE | |
| COMMUNICATION CABLES | | | | |
| ID7-ETH-A09 | A | FOE-AUX I/O | ETHERNET CABLE FROM FOE TO AUX BOX EPS | |
| ID7-ETH-A8 | B | FOE-AUX I/O | ETHERNET CABLE FROM FOE TO AUX BOX B CHAIN | |
| ID7-PB-A01 | A | FOE-AUX I/O | ProfiBus Cable from FOE to AUX BOX A CHAIN | |
| POWER CABLES | | | | |
| | A | lezzanine I/O BOX-FOE | 10/3 POWER A | |
| | B | lezzanine I/O BOX-FOI | 10/3 POWER B | |
| | A | FOE-AUX BOX | 10/3 POWER A | |
| | B | FOE-AUX BOX | 10/3 POWER B | |

LT-EL-BL-EI-PPS-1070-91

| LT-EL-BL-EI (DRAWING DIRECTORY) | LT-EL-BL-EI-PPS-1070-91 (DRAWING NUMBER) | B (REV) |
|---|---|---|
| COMPUTER REPRODUCIBLE | SCALE: N/A | SHEET 41 OF 41 |

The only official copy of this document is the one online in the NSLS-II Document and Records Center. Before using a printed copy, verify that it is current by checking the printed document's revision history log with that of the online version.



# NSLS-II Beamline 7-ID Radiological Interlock Test Checklist

| | |
|---|---|
| Test Reason: Full certification: Installation of Beamline vacuum switch 10 and Photon shutters 6 + 10 | Test Result: ☑ Passed ☐ Failed<br>Test Type: ☑ Full Certification ☐ Annual ☐ Partial |
| Test Date: 1/17/2019 | Start Time: 1/4/19 Finish Time: |
| Tester 1: Thomas McDonald; Robert Chmiel | Assistant 1: Accelerator Operations Staff |
| Tester 2: Gabrielle Stuve; Brian Heneveld | Assistant 2: |
| Tester 1 Signature: Thomas P McDonald | Tester 2 Signature: Brian Heneveld |
| *Reviewer 1: | Reviewer 1 Signature: |
| Reviewer 2: | Reviewer 2 Signature: |
| ** Safety Signature 7-ID (Beamline HMI)<br>A Chain: E617 4159 B Chain: 61C4 DC74 | Previous 7-ID SS# Date: 1/06/2018<br>A Chain: 774D 4489 B Chain: 46E7 6981 |
| ** Safety Signature Pentant 3 Beamline (SR HMI)<br>A Chain: E39A 2A12 B Chain: D9B1 829E | Previous Pentant 3 SS# Date: 1/06/2018<br>A Chain: E39A 2A12 B Chain: D9B1 829E |

* A review by an Accelerator Safety Systems Engineer and a designated specialist (Reviewer 2) is only required upon a Test failure.
**If Current Safety Signature number (found in top left corner on HMI) is different from previous number, contact the Accelerator Safety Systems Cognizant Engineer.

## PREPARATION:

| | |
|---|---|
| I. All hutch door switches have been evaluated by NSLS-II Engineering for proper positioning | ✓ |
| II. Inform Control Room Lead Operator that testing will be done | ✓ |
| III. Obtain Beamline enable and PPS reset keys from Control Room | ✓ |
| IV. Verify that beamline vacuum and water interlocks are satisfied | ✓ |
| V. 7-ID Beamline Staff close isolation vacuum valves in preparation for vacuum sensor test steps | ✓ |
| VI. Place muffler on beam imminent sounder | ✓ |
| VII. Request Lead Operator enable Master Shutters | ✓ |

- **Test steps highlighted in *Red (Ann)* will be performed during annual test of critical devices**
- **Test steps in *Red (Ann)* and *Blue* will be performed during Full Certifications**

**A1** ***Verify System Lockouts (Ann)***

| | |
|---|---|
| Gun HVPS Enable Switch | ✓ |
| Linac modulator line cords (3) OR Booster Dipole F PS 480 V | ✓ |
| Booster RF HVPS 480 V OR Booster low level RF drive termination | ✓ |
| SR System C low level RF drive termination OR SR System C RF output connection to cavity | ✓ |
| SR System D low level RF drive termination OR SR System D RF output connection to cavity | ✓ |

**A2** ***Verify Search and Time Beam Imminent Alarm***

Verify that search path is free from obstacles and line of sight is clear in search mirrors in accordance with NSLSII-ESH-PRC-032, *Beamline Enclosure Search and Secure and Breaking Security* ✓

| | A |
|---|---|
| *Close the right door* | ✓ |
| "Entry Permitted" sign is ON | ✓ |
| *Using the keypad, lock the closed doors* | ✓ |
| *Press SB1* | ✓ |
| SB1 illuminates | ✓ |
| Search sounder sounds | ✓ |
| Search yellow beacon flashing | ✓ |
| *Press SB2* | ✓ |
| SB2 illuminates | ✓ |
| *Exit hutch and close main door* | ✓ |
| *Press SBE and **begin timing*** | ✓ |
| Beam imminent alarm sounds for 30 seconds | ✓ |
| After warning, FOE Interlocked A and B ON (green), HMI | ✓ |
| "Interlocked" sign is ON | ✓ |
| Maglock A and B ON (green), all doors, HMI | ✓ |
| *Press the SBE/Access Button* | ✓ |
| "Interlocked" sign is OFF, "Entry Permitted" sign is ON | ✓ |
| FOE Interlocked A and B OFF, HMI | ✓ |
| Maglock A OFF (may require opening Maglock on keypad) | ✓ |
| *Open door* | ✓ |
| Door opens, Maglock B OFF | ✓ |

A3 ***Out of Sequence Search in the FOE (A Hutch)***

| | A |
|---|---|
| *Press SB2* | ✓ |
| SB2 does not illuminate | ✓ |
| *Press SB1* | ✓ |
| SB1 illuminates | ✓ |
| *Close hutch door and press SBE* | ✓ |
| Hutch does NOT secure | ✓ |

**A4** ***Search Timeout***

| | A |
|---|---|
| *Press first search button and* ***begin timing*** | ✓ |
| *Complete search* ***without pressing Final Search button*** | ✓ |
| Search sounders off in 2 minutes | ✓ |
| *Press Final Search button* | ✓ |
| Search does not complete | ✓ |

**A5** ***Shutter Enable***

| | | |
|---|---|---|
| Place actuators on FOE door switches and attach Maglock devices. | | ✓ |
| | Beamline Online A and B OFF | ✓ |
| Enable beamline with key and perform a reset | Beamline Online A and B ON (green) | ✓ |
| Search the FOE | FE Shutter Permits A and B ON *after* Beam Imminent Warning | ✓ |
| Open FE Shutters | FE Shutters A and B indicate open (green) | ✓ |
| | 2 "Beam On" signs are ON | ✓ |
| Close FE Shutters | FE Shutters A and B indicate closed (red) | ✓ |
| | 2 "Beam On" signs are OFF | ✓ |
| | Shutter 1 Permits A and B OFF | ✓ |
| Attempt to Open Shutter 1 from keypad | Shutter 1 A and B closed (red) | ✓ |
| Cycle Line 1 Beamline key in place | Shutter 1 Permits A and B ON (green) | ✓ |
| Open Shutter 1 from keypad | Shutter 1 A and B open (green) | ✓ |
| Cycle Line 1 Beamline key out of place | Shutter 1 A and B closed (red) | ✓ |
| | Shutter 1 Permits A and B OFF | ✓ |
| | Shutter 4 Permits A and B OFF | ✓ |
| Attempt to Open Shutter 4 from keypad | Shutter 4 A and B closed (red) | ✓ |
| Cycle Line 2 Beamline key in place | Shutter 4 Permits A and B ON (green) | ✓ |
| Open Shutter 4 from keypad | Shutter 4 A and B open (green) | ✓ |
| Cycle Line 2 Beamline key out of place | Shutter 4 A and B closed (red) | ✓ |
| | Shutter 4 Permits A and B OFF | ✓ |
| Rotate keys in place to enable both lines | Shutter 1 and 4 Permits A and B ON (green) | ✓ |

**A6** ***Emergency Stops (ES) FOE (A Hutch)***

| For each ES search FOE hutch. | ES1 | ES2 | ES3 |
|---|---|---|---|
| *Open FE Shutters from keypad* | ✓ | ✓ | ✓ |
| FE Shutters A and B open (green) | ✓ | ✓ | ✓ |
| FOE Interlocked A and B ON (green) | ✓ | ✓ | ✓ |
| FE Shutter Permits A and B ON (green) | ✓ | ✓ | ✓ |
| FE Critical Device Permits A and B ON | ✓ | ✓ | ✓ |
| Right Maglock A and B ON (green) | ✓ | ✓ | ✓ |
| Left Maglock A and B ON (green) | ✓ | ✓ | ✓ |
| *Press ES* | ✓ | ✓ | ✓ |
| FE Shutters A and B closed (red) | ✓ | ✓ | ✓ |
| FOE Interlocked A and B OFF | ✓ | ✓ | ✓ |
| FE Shutter Permits A and B OFF | ✓ | ✓ | ✓ |
| FE Critical Device Permits A and B OFF | ✓ | ✓ | ✓ |
| Right Maglock A OFF | ✓ | ✓ | ✓ |
| Left Maglock A OFF | ✓ | ✓ | ✓ |
| *Pull out ES* | ✓ | ✓ | ✓ |
| ES Sum Latch OFF | ✓ | ✓ | ✓ |
| *Reset fault* | ✓ | ✓ | ✓ |
| ES Sum Latch ON (green) | ✓ | ✓ | ✓ |

**A7** ***FOE Labyrinth 1 Switches and Latches***

Place actuators on the door switches and Maglock. ✓

| | A | B | Latch |
|---|---|---|---|
| *Search hutch* | ✓ | ✓ | ✓ |
| *Open FE Shutters from keypad* | ✓ | ✓ | ✓ |
| FE Shutters A and B open (green) | ✓ | ✓ | ✓ |
| FOE Interlocked A and B ON (green) | ✓ | ✓ | ✓ |
| FE Shutter Permits A and B ON (green) | ✓ | ✓ | ✓ |
| Cable Lab 1 Switches/Latch A and B ON (green) | ✓ | ✓ | ✓ |
| FE Critical Device Permits A and B ON | ✓ | ✓ | ✓ |

| | | | |
|---|---|---|---|
| *Remove one switch actuator* | ✓ | ✓ | ✓ |
| FE Shutters A and B closed (red) | ✓ | ✓ | ✓ |
| FOE Interlocked OFF | ✓ | ✓ | ✓ |
| FE Shutter Permit OFF | ✓ | ✓ | ✓ |
| Cable Lab 1 Switch/Latch Permit OFF | ✓ | ✓ | ✓ |
| FE Critical Device Permits A and B OFF | ✓ | ✓ | ✓ |
| *Replace switch actuator and reset fault* | ✓ | ✓ | ✓ |
| Remove labyrinth actuators and close labyrinth door | | | ✓ |

**A8** ***FOE Right Door Switches***

Place actuators on the door switches and Maglock. ✓

| | A | B | Reed |
|---|---|---|---|
| *Search hutch* | ✓ | ✓ | ✓ |
| *Open FE Shutters from keypad* | ✓ | ✓ | ✓ |
| FE Shutters A and B open (green) | ✓ | ✓ | ✓ |
| FOE Interlocked A and B ON (green) | ✓ | ✓ | ✓ |
| FE Shutter Permits A and B ON (green) | ✓ | ✓ | ✓ |
| FOE Door Switch Sum A and B ON (green) | ✓ | ✓ | ✓ |
| FE Critical Device Permits A and B ON | ✓ | ✓ | ✓ |
| *Remove one switch actuator* | ✓ | ✓ | ✓ |
| FE Shutters A and B closed (red) | ✓ | ✓ | ✓ |
| FOE Interlocked OFF | ✓ | ✓ | ✓ |
| FE Shutter Permit OFF | ✓ | ✓ | ✓ |
| FOE Door Switch Sum OFF | ✓ | ✓ | ✓ |
| FE Critical Device Permits A and B OFF | ✓ | ✓ | ✓ |
| *Replace switch actuator and reset fault* | ✓ | ✓ | ✓ |
| Remove actuators and close door | | | ✓ |

**A9** ***FOE Left Door Switches***

Place actuators on the door switches and Maglock. ✓

| | A | B | Reed |
|---|---|---|---|
| *Search hutch* | ✓ | ✓ | ✓ |
| *Open FE Shutters from keypad* | ✓ | ✓ | ✓ |
| FE Shutters A and B open (green) | ✓ | ✓ | ✓ |
| FOE Interlocked A and B ON (green) | ✓ | ✓ | ✓ |
| FE Shutter Permits A and B ON (green) | ✓ | ✓ | ✓ |
| FOE Door Switch Sum A and B ON (green) | ✓ | ✓ | ✓ |
| FE Critical Device Permits A and B ON | ✓ | ✓ | ✓ |
| *Remove one switch actuator* | ✓ | ✓ | ✓ |
| FE Shutters A and B closed (red) | ✓ | ✓ | ✓ |
| FOE Interlocked OFF | ✓ | ✓ | ✓ |
| FE Shutter Permit OFF | ✓ | ✓ | ✓ |
| FOE Door Switch Sum OFF | ✓ | ✓ | ✓ |
| FE Critical Device Permits A and B OFF | ✓ | ✓ | ✓ |
| *Replace switch actuator and reset fault* | ✓ | ✓ | ✓ |
| Remove actuators and close door | | | ✓ |

**A10** ***Magnetic Lock Test (FOE)***

Connect the FOE test box to the PPS cabinet. Use the box to turn ON the Maglocks (set switches to "Normal"). ✓

Repeat steps for each door: Right (R) and Left (L).

| | R | L |
|---|---|---|
| *Search hutch* | ✓ | ✓ |
| FOE Interlocked A and B ON (green) | ✓ | ✓ |
| FE Shutter Permits A and B ON (green) | ✓ | ✓ |
| Door Maglock A and B ON (green) | ✓ | ✓ |
| *Open FE Shutters* | ✓ | ✓ |
| FE Shutters open (green) | ✓ | ✓ |
| *Using FOE test box, turn OFF Maglock* | ✓ | ✓ |
| Door Maglock A OFF | ✓ | ✓ |
| FE Shutters closed (red) | ✓ | ✓ |
| FOE Interlocked A OFF | ✓ | ✓ |
| FE Shutter Permit A OFF | ✓ | ✓ |

| | | |
|---|---|---|
| *Turn On Maglock and reset fault* | ✓ | ✓ |
| *Search hutch* | ✓ | ✓ |
| *Using FE Shutter test fixture, Open FE Shutters* | ✓ | ✓ |
| FE Critical Device Permits A and B ON | ✓ | ✓ |
| *Using FOE test box, turn OFF Maglock* | ✓ | ✓ |
| *Within 3 seconds:* FE Critical Device Permit A chain OFF | ✓ | ✓ |
| *Close FE Shutters and reset fault* | ✓ | ✓ |
| Disconnect FOE test box | | ✓ |

A11 ***Vacuum Sensors Beamline SW3***

Qualified Beamline Staff will perform vacuum venting.

| | SW3 |
|---|---|
| Vacuum sensor SW A and B ON (green) | ✓ |
| Shutter 3 Permits A and B ON (green) | ✓ |
| Shutter 6 Permits A and B ON (green) | ✓ |
| *Open Beamline Photon Shutters 3 and 6* | ✓ |
| Shutter 3 open (green) | ✓ |
| Shutter 6 open (green) | ✓ |
| *Beamline Staff vents up section* | ✓ |
| Vacuum sensor SW A and B OFF | ✓ |
| Shutter 3 closed | ✓ |
| Shutter 6 closed | ✓ |
| Shutter 3 Permits A and B OFF | ✓ |
| Shutter 6 Permits A and B OFF | ✓ |
| FE Critical Device Permits A and B ON | ✓ |
| *Open all upstream shutters from Shutter 3 with test devices* | ✓ |
| All upstream shutters open | ✓ |
| FE Critical Device Permits A and B OFF | ✓ |
| *Close all shutters and reset FE Critical Devices Fault* | ✓ |
| FE Critical Device Permits A and B ON | ✓ |
| *Open all upstream shutters from Shutter 6 with test devices* | ✓ |
| All upstream shutters open | ✓ |

FE Critical Device Permits A and B OFF ✓

*Close all shutters and reset FE Critical Devices Fault* ✓

FE Critical Device Permits A and B ON ✓

*Beamline Staff returns vacuum* ✓

Vacuum sensor SW A and B ON (green) ✓

Shutter 3 Permits A and B OFF ✓

Shutter 6 Permits A and B OFF ✓

*Reset fault* ✓

Shutter 3 Permits A and B ON (green) ✓

Shutter 6 Permits A and B ON (green) ✓

A12 ***Vacuum Sensors Beamline SW 2***

Qualified Beamline Staff will perform vacuum venting.

| | SW2 |
|---|---|
| Vacuum sensor SW A and B ON (green) | ✓ |
| Shutter 2 Permits A and B ON (green) | ✓ |
| Shutter 5 Permits A and B ON (green) | ✓ |
| *Open Beamline Photon Shutters 2 and 5* | ✓ |
| Shutter 2 open (green) | ✓ |
| Shutter 5 open (green) | ✓ |
| *Beamline Staff vents up section* | ✓ |
| Vacuum sensor SW A and B OFF | ✓ |
| Shutter 2 closed | ✓ |
| Shutter 5 closed | ✓ |
| Shutter 2 Permits A and B OFF | ✓ |
| Shutter 5 Permits A and B OFF | ✓ |
| FE Critical Device Permits A and B ON | ✓ |
| *Open all upstream shutters from Shutter 2 with test devices* | ✓ |
| All upstream shutters open | ✓ |
| FE Critical Device Permits A and B OFF | ✓ |
| *Close all shutters and reset FE Critical Devices Fault* | ✓ |
| FE Critical Device Permits A and B ON | ✓ |

| | |
|---|---|
| *Open all upstream shutters from Shutter 5 with test devices* | ✓ |
| All upstream shutters open | ✓ |
| FE Critical Device Permits A and B OFF | ✓ |
| *Close all shutters and reset FE Critical Devices Fault* | ✓ |
| FE Critical Device Permits A and B ON | ✓ |
| *Beamline Staff returns vacuum* | ✓ |
| Vacuum sensor SW A and B ON (green) | ✓ |
| Shutter 2 Permits A and B OFF | ✓ |
| Shutter 5 Permits A and B OFF | ✓ |
| *Reset fault* | ✓ |
| Shutter 2 Permits A and B ON (green) | ✓ |
| Shutter 5 Permits A and B ON (green) | ✓ |

A13 ***Vacuum Sensors Beamline SW1 and SW8***

Qualified Beamline Staff will perform vacuum venting.

| Repeat steps for each vacuum switch. | SW1 | SW8 |
|---|---|---|
| Vacuum sensor SW A and B ON (green) | ✓ | ✓ |
| Shutter 1 Permits A and B ON (green) | ✓ | ✓ |
| *Open Beamline Photon Shutter 1* | ✓ | ✓ |
| Shutter 1 open (green) | ✓ | ✓ |
| *Beamline Staff vents up section* | ✓ | ✓ |
| Vacuum sensor SW A and B OFF | ✓ | ✓ |
| Shutter 1 closed | ✓ | ✓ |
| Shutter 1 Permits A and B OFF | ✓ | ✓ |
| FE Critical Device Permits A and B ON | ✓ | ✓ |
| *Open Shutter 1 and FE Shutters with test devices* | ✓ | ✓ |
| Shutter 1 and FE Shutters open | ✓ | ✓ |
| FE Critical Device Permits A and B OFF | ✓ | ✓ |
| *Close all shutters and reset FE Critical Devices Fault* | ✓ | ✓ |
| FE Critical Device Permits A and B ON | ✓ | ✓ |
| *Beamline Staff returns vacuum* | ✓ | ✓ |

| | | |
|---|---|---|
| Vacuum sensor SW A and B ON (green) | ✓ | ✓ |
| Shutter 1 Permits A and B OFF | ✓ | ✓ |
| *Reset fault* | ✓ | ✓ |
| Shutter 1 Permits A and B ON (green) | ✓ | ✓ |

**A14** ***Vacuum Sensors Beamline SW7***

Qualified Beamline Staff will perform vacuum venting.

| | SW7 |
|---|---|
| Vacuum sensor SW A and B ON (green) | ✓ |
| Shutter 9 Permits A and B ON (green) | ✓ |
| *Open Beamline Photon Shutter 9* | ✓ |
| Shutter 9 open (green) | ✓ |
| *Beamline Staff vents up section* | ✓ |
| Vacuum sensor SW A and B OFF | ✓ |
| Shutter 9 closed | ✓ |
| Shutter 9 Permits A and B OFF | ✓ |
| FE Critical Device Permits A and B ON | ✓ |
| *Open all upstream shutters and FE Shutters with test devices* | ✓ |
| All upstream shutters open | ✓ |
| FE Critical Device Permits A and B OFF | ✓ |
| *Close all shutters and reset FE Critical Devices Fault* | ✓ |
| FE Critical Device Permits A and B ON | ✓ |
| *Beamline Staff returns vacuum* | ✓ |
| Vacuum sensor SW A and B ON (green) | ✓ |
| Shutter 9 Permits A and B OFF | ✓ |
| *Reset fault* | ✓ |
| Shutter 9 Permits A and B ON (green) | ✓ |

**A15** ***Vacuum Sensors Beamline SW6***

Qualified Beamline Staff will perform vacuum venting.

| | SW6 |
|---|---|
| Vacuum sensor SW A and B ON (green) | ✓ |

| | |
|---|---|
| Shutter 8 Permits A and B ON (green) | ✓ |
| *Open Beamline Photon Shutter 8* | ✓ |
| Shutter 8 open (green) | ✓ |
| *Beamline Staff vents up section* | ✓ |
| Vacuum sensor SW A and B OFF | ✓ |
| Shutter 8 closed | ✓ |
| Shutter 8 Permits A and B OFF | ✓ |
| FE Critical Device Permits A and B ON | ✓ |
| *Open all upstream shutters and FE Shutters with test devices* | ✓ |
| All upstream shutters open | ✓ |
| FE Critical Device Permits A and B OFF | ✓ |
| *Close all shutters and reset FE Critical Devices Fault* | ✓ |
| FE Critical Device Permits A and B ON | ✓ |
| *Beamline Staff returns vacuum* | ✓ |
| Vacuum sensor SW A and B ON (green) | ✓ |
| Shutter 8 Permits A and B OFF | ✓ |
| *Reset fault* | ✓ |
| Shutter 8 Permits A and B ON (green) | ✓ |

**A16** ***Vacuum Sensors Beamline SW11 and SW5***

Qualified Beamline Staff will perform vacuum venting.

| Repeat steps for each vacuum switch. | SW11 | SW5 |
|---|---|---|
| Vacuum sensor SW A and B ON (green) | ✓ | ✓ |
| Shutter 7 Permits A and B ON (green) | ✓ | ✓ |
| *Open Beamline Photon Shutter 7* | ✓ | ✓ |
| Shutter 7 open (green) | ✓ | ✓ |
| *Beamline Staff vents up section* | ✓ | ✓ |
| Vacuum sensor SW A and B OFF | ✓ | ✓ |
| Shutter 7 closed | ✓ | ✓ |
| Shutter 7 Permits A and B OFF | ✓ | ✓ |
| FE Critical Device Permits A and B ON | ✓ | ✓ |

| | | |
|---|---|---|
| *Open all upstream shutters and FE Shutters with test devices* | ✓ | ✓ |
| All upstream shutters open | ✓ | ✓ |
| FE Critical Device Permits A and B OFF | ✓ | ✓ |
| *Close all shutters and reset FE Critical Devices Fault* | ✓ | ✓ |
| FE Critical Device Permits A and B ON | ✓ | ✓ |
| *Beamline Staff returns vacuum* | ✓ | ✓ |
| Vacuum sensor SW A and B ON (green) | ✓ | ✓ |
| Shutter 7 Permits A and B OFF | ✓ | ✓ |
| *Reset fault* | ✓ | ✓ |
| Shutter 7 Permits A and B ON (green) | ✓ | ✓ |

A17 ***Vacuum Sensors Beamline SW10***

Qualified Beamline Staff will perform vacuum venting.

| | SW10 |
|---|---|
| Vacuum sensor SW A and B ON (green) | ✓ |
| Shutter 10 Permits A and B ON (green) | ✓ |
| *Open Beamline Photon Shutter 10* | ✓ |
| Shutter 10 open (green) | ✓ |
| *Beamline Staff vents up section* | ✓ |
| Vacuum sensor SW A and B OFF | ✓ |
| Shutter 10 closed | ✓ |
| Shutter 10 Permits A and B OFF | ✓ |
| FE Critical Device Permits A and B ON | ✓ |
| *Open all upstream shutters and FE Shutters with test devices* | ✓ |
| All upstream shutters open | ✓ |
| FE Critical Device Permits A and B OFF | ✓ |
| *Close all shutters and reset FE Critical Devices Fault* | ✓ |
| FE Critical Device Permits A and B ON | ✓ |
| *Beamline Staff returns vacuum* | ✓ |
| Vacuum sensor SW A and B ON (green) | ✓ |
| Shutter 10 Permits A and B OFF | ✓ |

*Reset fault* ✓

Shutter 10 Permits A and B ON (green) ✓

**A18** ***Vacuum Sensors Beamline SW4 and SW9***

Qualified Beamline Staff will perform vacuum venting.

| Repeat steps for each vacuum switch. | SW4 | SW9 |
|---|---|---|
| Vacuum sensor SW A and B ON (green) | ✓ | ✓ |
| Shutter 4 Permits A and B ON (green) | ✓ | ✓ |
| *Open Beamline Photon Shutter 4* | ✓ | ✓ |
| Shutter 4 open (green) | ✓ | ✓ |
| *Beamline Staff vents up section* | ✓ | ✓ |
| Vacuum sensor SW A and B OFF | ✓ | ✓ |
| Shutter 4 closed | ✓ | ✓ |
| Shutter 4 Permits A and B OFF | ✓ | ✓ |
| FE Critical Device Permits A and B ON | ✓ | ✓ |
| *Open Shutter 4 and FE Shutters with test devices* | ✓ | ✓ |
| Shutter 4 and FE Shutters open | ✓ | ✓ |
| FE Critical Device Permits A and B OFF | ✓ | ✓ |
| *Close all shutters and reset FE Critical Devices Fault* | ✓ | ✓ |
| FE Critical Device Permits A and B ON | ✓ | ✓ |
| *Beamline Staff returns vacuum* | ✓ | ✓ |
| Vacuum sensor SW A and B ON (green) | ✓ | ✓ |
| Shutter 4 Permits A and B OFF | ✓ | ✓ |
| *Reset fault* | ✓ | ✓ |
| Shutter 4 Permits A and B ON (green) | ✓ | ✓ |

**A19** ***FOE Water Interlock***

FOE water flow meters for the PPS are located on top of the hutch.

The PPS FOE Water Safety Trip Amplifiers (STA) are located in the cabinet to the upper right of the meters on top of the hutch.

| Meter Reading | Meter Reading | Current STA A | Current STA B |
|---|---|---|---|
| A1= 1.69 | B1= 1.73 | A STA1= 1.69 | B STA1= 1.73 |
| A2= 0.59 | B2= 0.59 | A STA2= 0.59 | B STA2= 0.59 |

The current programmed trip settings for the amplifiers are in column 1. The STA readouts for each tested A and B chain STAs will be recorded in columns 3 and 4. These recordings should be within 15% of the programmed trip point (column 2).

| Trip Points | Trip Points (- 15 %) | Recorded A Trip | Recorded B Trip |
|---|---|---|---|
| PPS 1: 1.3 GPM | 1.1 GPM | A STA1= 1.3 | B STA1= 1.3 |
| PPS 2: 0.5 GPM | 0.43 GPM | A STA2= 0.5 | B STA2= 0.5 |

| Repeat each step for all water flow meters | PPS1 | PPS2 |
|---|---|---|
| *Open FE Shutters* | ✓ | ✓ |
| FE Shutters A and B open (green) | ✓ | ✓ |
| FOE Water Permits A and B ON (green), HMI | ✓ | ✓ |
| FE Shutter Permits A and B ON (green), HMI | ✓ | ✓ |
| *Using the valve, lower water flow to trip point* | ✓ | ✓ |
| FE Shutters A and B closed (red) | ✓ | ✓ |
| In 5 seconds: FE Shutter Permits A and B OFF, HMI | ✓ | ✓ |
| FOE Water Permits A and B OFF, HMI | ✓ | ✓ |
| Recorded STA A and B levels above; within 15% | ✓ | ✓ |
| *Return water flow to pretest values* | ✓ | ✓ |
| FOE Water Permits A and B remain OFF, HMI | ✓ | ✓ |
| *Reset fault at PPS cabinet* | ✓ | ✓ |
| FOE Water Permits A and B ON (green), HMI | ✓ | ✓ |
| FE Shutter Permits A and B ON (green), HMI | ✓ | ✓ |

A20 ***FOE Water Safety Trip Amplifier Faults***

| Repeat each step for all water flow meters. | PPS1 | PPS2 |
|---|---|---|
| *Open FE Shutters with keypad* | ✓ | ✓ |
| FE Shutters A and B open (green) | ✓ | ✓ |
| FOE Water Permits A and B ON (green), HMI | ✓ | ✓ |
| FE Shutter Permits A and B ON (green), HMI | ✓ | ✓ |
| *Press A chain fault/reset button* | ✓ | ✓ |
| FE Shutters A and B closed (red) | ✓ | ✓ |
| FOE Water Permit A OFF, HMI | ✓ | ✓ |
| In 5 seconds: FE Shutter Permit A OFF, HMI | ✓ | ✓ |
| *Reset fault* | ✓ | ✓ |

| | | |
|---|---|---|
| *Open FE Shutters with keypad* | ✓ | ✓ |
| FE Shutters A and B open (green) | ✓ | ✓ |
| FOE Water Permits A and B ON (green), HMI | ✓ | ✓ |
| FE Shutter Permits A and B ON (green), HMI | ✓ | ✓ |
| *Press B chain fault/reset button* | ✓ | ✓ |
| FE Shutters A and B closed (red) | ✓ | ✓ |
| FOE Water Permit B OFF, HMI | ✓ | ✓ |
| In 5 seconds: FE Shutter Permit B OFF, HMI | ✓ | ✓ |
| *Reset fault* | ✓ | ✓ |

A21 ***Auxiliary Water Interlock***

Auxiliary water flow meters for the PPS are located downstream of the FOE.

The Auxiliary PPS Water Safety Trip Amplifiers (STA) are located in the cabinet located downstream of the FOE.

| Meter Reading | Meter Reading | Current STA A | Current STA B |
|---|---|---|---|
| A1= 1.5 | B1= 1.5 | A STA1= 1.5 | B STA1= 1.5 |
| A2= 1.22 | B2= 1.19 | A STA2= 1.22 | B STA2= 1.19 |

The current programmed trip settings for the amplifiers are in column 1. The STA readouts for each tested A and B chain STAs will be recorded in columns 3 and 4. These recordings should be within 15% of the programmed trip point (column 2).

| | Trip Points | Trip Points (- 15 %) | Recorded A Trip | Recorded B Trip |
|---|---|---|---|---|
| U/S meters Line 1 | AUX 1: ~~0.6~~ 0.5 GPM 7.M 1/17/19 | 0.51 GPM | A STA1= 0.5 | B STA1= 0.5 |
| D/S meters Line 2 | AUX 2: ~~0.5~~ 0.6 GPM 7.M 1/17/19 | 0.43 GPM | A STA2= 0.6 | B STA2= 0.6 |

Repeat each step for all water flow meters.

| | AUX 1 | AUX 2 |
|---|---|---|
| *Open Photon Shutter 4 for AUX1, Shutter 4 for AUX2* 7.M 1/17/2019 1 7.M 1/17/2019 | ✓ | ✓ |
| Shutters A and B open (green) | ✓ | ✓ |
| AUX Water Permits A and B ON (green), HMI | ✓ | ✓ |
| Shutter Permits A and B ON (green), HMI | ✓ | ✓ |
| *Using the valve, lower water flow to trip point* | ✓ | ✓ |
| Shutters A and B closed (red) | ✓ | ✓ |
| Shutter Permits A and B OFF, HMI | ✓ | ✓ |
| AUX Water Permits A and B OFF, HMI | ✓ | ✓ |
| Recorded STA A and B levels above; within 15% | ✓ | ✓ |
| *Return water flow to pretest values* | ✓ | ✓ |

The only official copy of this document is the one online in the NSLS-II Document and Records Center. Before using a printed copy, verify that it is current by checking the printed document's revision history log with that of the online version.



| | | |
|---|---|---|
| AUX Water Permits A and B remain OFF, HMI | ✓ | ✓ |
| *Reset fault at PPS cabinet* | ✓ | ✓ |
| AUX Water Permits A and B ON (green), HMI | ✓ | ✓ |
| Shutter Permits A and B ON (green), HMI | ✓ | ✓ |

**A22** ***Auxiliary Water Safety Trip Amplifier Faults***

| Repeat each step for all water flow meters. | AUX1 | AUX2 |
|---|---|---|
| *Open Photon Shutter* 4 (TM 1/17/19) *for AUX1, Shutter* 1 (TM 1/17/19) *for AUX2* | ✓ | ✓ |
| Shutters A and B open (green) | ✓ | ✓ |
| AUX Water Permits A and B ON (green), HMI | ✓ | ✓ |
| Shutter Permits A and B ON (green), HMI | ✓ | ✓ |
| *Press A chain fault/reset button* | ✓ | ✓ |
| Shutters A and B closed (red) | ✓ | ✓ |
| AUX Water Permit A OFF, HMI | ✓ | ✓ |
| Shutter Permit A OFF, HMI | ✓ | ✓ |
| *Reset fault* (TM 1/17/19) | ✓ | ✓ |
| *Open Photon Shutter* 4 (TM 1/17/19) *for AUX1, Shutter* 1 (TM 1/17/19) *for AUX2* | ✓ | ✓ |
| Shutters A and B open (green) | ✓ | ✓ |
| AUX Water Permits A and B ON (green), HMI | ✓ | ✓ |
| Shutter Permits A and B ON (green), HMI | ✓ | ✓ |
| *Press B chain fault/reset button* | ✓ | ✓ |
| Shutters A and B closed (red) | ✓ | ✓ |
| AUX Water Permit B OFF, HMI | ✓ | ✓ |
| Shutter Permit B OFF, HMI | ✓ | ✓ |
| *Reset fault* | ✓ | ✓ |

**A23** ***PPS Aperture***

The PPS Aperture Transmitter meters are located inside the FOE. The STAs are located in the PPS cabinet outside of the FOE.

Open the PPS Aperture Transmiter Enclosure and record the Transmitter meter readings (absolute pressure).

| Meter Reading | Meter Reading | Current STA A | Current STA B |
|---|---|---|---|
| A1= 31.9 | B1= 32.0 | A STA1= 31.9 | B STA1= 32.0 |

Qualified Beamline Staff will adjust the valve to lower the absolute pressure (trip point at 18 psia).

| | | | |
|---|---|---|---|
| *Open FE Shutters* | ✓ | | |
| FE Shutters A and B open (green) | ✓ | | |
| Aperture Low Press. A and B ON (green), HMI | ✓ | | |
| FE Critical Device Permits A and B ON (green), HMI | ✓ | | |
| *Using the valve, lower pressure to below trip point at 18 psia* | ✓ | | |
| Both A and B chains trip within 5% of 18 psia (>17.1) | ✓ | A= 18.0 | B= 18.0 |
| FE Shutters A and B closed (red) | ✓ | | |
| FE Critical Device Permits A and B OFF, HMI | ✓ | | |
| Aperture Low Press. A and B OFF, HMI | ✓ | | |
| *Qualified Beamline Staff return pressure to pretest values* | ✓ | | |
| Aperture Low Press. A and B ON (green), HMI | ✓ | | |
| *Reset fault at I/O Box* | ✓ | | |
| FE Critical Device Permits A and B ON (green), HMI | ✓ | | |
| *Close and secure the PPS Aperture Transmiter Enclosure* | ✓ | | |

A24 ***PPS Aperture (Module Fault)***

| Repeat each step for A and B chain STAs. | A1 | B1 |
|---|---|---|
| *Open FE Shutters* | ✓ | ✓ |
| FE Shutters A and B open (green) | ✓ | ✓ |
| Aperture Module Fault A and B ON (green), HMI | ✓ | ✓ |
| FE Critical Device Permits A and B ON (green), HMI | ✓ | ✓ |
| *Generate a trip amplifier fault* | ✓ | ✓ |
| FE Shutters A and B closed (red) | ✓ | ✓ |
| FE Critical Device Permits A and B OFF, HMI | ✓ | ✓ |
| Aperture Module Fault OFF (red), HMI | ✓ | ✓ |
| *Return trip amplifier to operating condition* | ✓ | ✓ |
| Aperture Module Fault A and B ON (green), HMI | ✓ | ✓ |
| *Reset fault at I/O box* | ✓ | ✓ |
| FE Critical Device Permits A and B ON (green), HMI | ✓ | ✓ |

A25 ***Observe Beamline Photon Shutter Operation***

| Repeat each step for all Photon Shutters. | S1 | S2 | S3 | S4 |
|---|---|---|---|---|
| *Close Beamline Photon Shutter* | ✓ | ✓ | ✓ | ✓ |

| | | | | |
|---|---|---|---|---|
| Shutter indicates closed A and B (red), HMI | ✓ | ✓ | ✓ | ✓ |
| *Open Beamline Photon Shutter* | ✓ | ✓ | ✓ | ✓ |
| Shutter opens smoothly without hesitation | ✓ | ✓ | ✓ | ✓ |
| Shutter indicates open A and B (green), HMI | ✓ | ✓ | ✓ | ✓ |
| *Close Beamline Photon Shutter* | ✓ | ✓ | ✓ | ✓ |
| Shutter indicates closed A and B (red), HMI | ✓ | ✓ | ✓ | ✓ |

| | S5 | S6 | S7 | S8 |
|---|---|---|---|---|
| *Close Beamline Photon Shutter* | ✓ | ✓ | ✓ | ✓ |
| Shutter indicates closed A and B (red), HMI | ✓ | ✓ | ✓ | ✓ |
| *Open Beamline Photon Shutter* | ✓ | ✓ | ✓ | ✓ |
| Shutter opens smoothly without hesitation | ✓ | ✓ | ✓ | ✓ |
| Shutter indicates open A and B (green), HMI | ✓ | ✓ | ✓ | ✓ |
| *Close Beamline Photon Shutter* | ✓ | ✓ | ✓ | ✓ |
| Shutter indicates closed A and B (red), HMI | ✓ | ✓ | ✓ | ✓ |

| | S9 | S10 |
|---|---|---|
| *Close Beamline Photon Shutter* | ✓ | ✓ |
| Shutter indicates closed A and B (red), HMI | ✓ | ✓ |
| *Open Beamline Photon Shutter* | ✓ | ✓ |
| Shutter opens smoothly without hesitation | ✓ | ✓ |
| Shutter indicates open A and B (green), HMI | ✓ | ✓ |
| *Close Beamline Photon Shutter* | ✓ | ✓ |
| Shutter indicates closed A and B (red), HMI | ✓ | ✓ |

**A26** ***Observe FE Safety Shutter(s) Operation***

With Maintenance Door open, connect FE Shutter test fixture. ✓

| | | |
|---|---|---|
| | Shutters are in the closed (down) position | ✓ |
| | FE Shutters A and B closed (red), HMI | ✓ |
| *Turn the "Air" switch ON* | | ✓ |
| *Open FE SSs A and B and Photon Shutter* | Shutters open freely without hesitation | ✓ |
| | Shutters are in the open (up) position | ✓ |

| | | |
|---|---|---|
| | FE Shutters A and B open (green), HMI | ✓ |
| *Actuate Shutters closed* | FE Shutters A and B closed (red), HMI | ✓ |

**A27** ***FE Safety Shutters Can Only be Closed if FE Photon Shutter is Closed***

| | | |
|---|---|---|
| *Search hutch* | FOE Interlocked A and B ON (green), HMI | ✓ |
| | FE Critical Device Permits A and B ON (green), HMI | ✓ |
| *Open FE SSA* | SSA Open | ✓ |
| *Open FE Photon Shutter* | FE Critical Device Permits A and B OFF, HMI | ✓ |
| *Close Shutters* | | ✓ |
| *Reset fault* | FE Critical Device Permits A and B ON (green), HMI | ✓ |
| *Open FE SSB* | SSB Open | ✓ |
| *Open FE Photon Shutter* | FE Critical Device Permits A and B OFF, HMI | ✓ |
| *Close Shutters* | | ✓ |
| *Reset fault* | FE Critical Device Permits A and B ON (green), HMI | ✓ |

**A28** ***Beamline Enable Key (Opening Shutter Without Key Trips SR RF and Dipole PS)***

| | | |
|---|---|---|
| *Remove beamline enable key* | Beamline Online A and B OFF | ✓ |
| *Search FOE* | FOE Interlocked A and B ON (green), HMI | ✓ |
| | FE Critical Device Permits A and B ON (green), HMI | ✓ |
| *Using FE Shutter test fixture, Open FE Shutters* | FE Critical Device Permits A and B OFF | ✓ |
| *Using FE Shutter test fixture, Close FE Shutters* | | ✓ |
| *Replace beamline enable key and reset faults* | Beamline Online A and B ON (green) | ✓ |
| | FE Critical Device Permits A and B ON (green), HMI | ✓ |
| | | ✓ |

***Live Testing***

**A29** ***Reach Back FOE Door Switches (Ann)***

| | | |
|---|---|---|
| *Secure P1 through P5* | SR Secure, A and B chain, SR HMI | ✓ |
| *Place actuators on FOE hutch door switches and Maglock* | | ✓ |
| *Search hutch* | FOE Interlocked A and B ON (green), HMI | ✓ |
| | FE Critical Device Permits A and B ON (green), HMI | ✓ |

| | | |
|---|---|---|
| *Check Control Room SR HMI (Beamline Page)* | FE Critical Device Permits A and B ON (green), SR HMI | ✓ |
| *Check I/O Box 7 Beamline Enable Panel* | FE Critical Device Permits A and B LEDs ON | ✓ |
| *Check I/O Box 28 Beamline Enable Panel* | FE Critical Device Permit Sum A and B LEDs ON | ✓ |
| *Check Dipole PS (positive) Beamline Interface* | A and B Permits ON, Dipole PS Pos. Interface | ✓ |
| *Check Dipole PS (negative) Beamline Interface* | A and B Permits ON, Dipole PS Neg. Interface | ✓ |
| *Check SR RF System C HVPS Beamline Interface* | A and B Permits ON, SR RF System C HVPS Interface | ✓ |
| *Check SR RF System D HVPS Beamline Interface* | A and B Permits ON, SR RF System D HVPS Interface | ✓ |
| *Operator enables SR Dipole PS* | SR Dipole PS is ON | ✓ |
| *Operator enables SR RF System C HVPS* | SR RF System C HVPS is ON | ✓ |
| *Operator enables SR RF System D HVPS* | SR RF System D HVPS is ON | ✓ |
| *Using FE Shutter test fixture, open the FE Shutters (SSA, SSB and Photon)* | | ✓ |
| | FE Shutters open | ✓ |
| Remove an "***A chain***" door switch actuator from beamline hutch door | | ✓ |
| | FOE Interlocked A OFF, HMI | ✓ |
| | FE Critical Device Permit A chain OFF, HMI | ✓ |
| *Check I/O Box 7 Beamline Enable Panel* | FE Critical Device Permit A LED OFF | ✓ |
| *Check I/O Box 28 Beamline Enable Panel* | FE Critical Device Permit Sum A LED OFF | ✓ |
| *Check Control Room SR HMI (Beamline Page)* | FE Critical Device Permit A OFF (red), SR HMI | ✓ |
| *Check SR RF System C HVPS Beamline Interface* | A Permit OFF, SR RF System C HVPS Interface | ✓ |
| *Check SR RF System D HVPS Beamline Interface* | A Permit OFF, SR RF System D HVPS Interface | ✓ |
| *Check Dipole PS (positive) Beamline Interface* | A Permit OFF, Dipole PS Pos. Interface | ✓ |
| *Check Dipole PS (negative) Beamline Interface* | A Permit OFF, Dipole PS Neg. Interface | ✓ |
| | SR RF System C HVPS is OFF | ✓ |
| | SR RF System D HVPS is OFF | ✓ |
| | SR Dipole PS is OFF | ✓ |
| *Close FE Shutters with FE Shutter test fixture* | FE Shutters closed | ✓ |
| Replace "***A chain***" door switch actuator and reset fault(s) | | ✓ |
| *Search hutch* | | ✓ |
| | FOE Interlocked A and B ON (green), HMI | ✓ |
| | FE Critical Device Permits A and B ON (green), HMI | ✓ |

| | | |
|---|---|---|
| *Check Control Room SR HMI (Beamline Page)* | FE Critical Device Permits A and B ON (green), SR HMI | √ |
| *Check I/O Box 7 Beamline Enable Panel* | FE Critical Device Permits A and B LEDs ON | √ |
| *Check I/O Box 28 Beamline Enable Panel* | FE Critical Device Permit Sum A and B LEDs ON | √ |
| *Check Dipole PS (positive) Beamline Interface* | A and B Permits ON, Dipole PS Pos. Interface | √ |
| *Check Dipole PS (negative) Beamline Interface* | A and B Permits ON, Dipole PS Neg. Interface | √ |
| *Check SR RF System C HVPS Beamline Interface* | A and B Permits ON, SR RF System C HVPS Interface | √ |
| *Check SR RF System D HVPS Beamline Interface* | A and B Permits ON, SR RF System D HVPS Interface | √ |
| *Operator enables SR Dipole PS* | SR Dipole PS is ON | √ |
| *Operator enables SR RF System C HVPS* | SR RF System C HVPS is ON | √ |
| *Operator enables SR RF System D HVPS* | SR RF System D HVPS is ON | √ |
| *Using FE Shutter test fixture, open the FE Shutters (SSA, SSB and Photon)* | | √ |
| | FE Shutters open | √ |
| Remove "***B chain***" switch actuator | FOE Interlocked B OFF, HMI | √ |
| | FE Critical Device Permit B chain OFF, HMI | √ |
| *Check I/O Box 7 Beamline Enable Panel* | FE Critical Device Permit B LED OFF | √ |
| *Check Control Room SR HMI (Beamline Page)* | FE Critical Device Permit B OFF (red), SR HMI | √ |
| *Check I/O Box 28 Beamline Enable Panel* | FE Critical Device Permit Sum B LED OFF | √ |
| *Check SR RF System C HVPS Beamline Interface* | B Permit OFF, SR RF System C HVPS Interface | √ |
| *Check SR RF System D HVPS Beamline Interface* | B Permit OFF, SR RF System D HVPS Interface | √ |
| *Check Dipole PS (positive) Beamline Interface* | B Permit OFF, Dipole PS Pos. Interface | √ |
| *Check Dipole PS (negative) Beamline Interface* | B Permit OFF, Dipole PS Neg. Interface | √ |
| | SR Dipole PS is OFF | √ |
| | SR RF System C HVPS is OFF | √ |
| | SR RF System D HVPS is OFF | √ |
| *Close FE Shutters with FE Shutter test fixture* | FE Shutters closed | √ |
| Remove beamline hutch switch actuators and Maglock actuator | | √ |

**A30** ***Water Interlock (Live)***

| | | |
|---|---|---|
| *Search FOE* | FOE Interlocked A and B ON (green), HMI | √ |
| | FE Shutter Permits A and B ON (green), HMI | √ |

| | | |
|---|---|---|
| | FE Critical Device Permits A and B ON (green), HMI | ✓ |
| *Check I/O Box 7 Beamline Enable Panel* | FE Critical Device Permits A and B LEDs ON | ✓ |
| *Check I/O Box 28 Beamline Enable Panel* | FE Critical Device Permit Sum A and B LEDs ON | ✓ |
| *Check Control Room SR HMI (Beamline Page)* | FE Critical Device Permits A and B ON (green), SR HMI | ✓ |
| *Check Dipole PS (positive) Beamline Interface* | A and B Permits ON, Dipole PS Pos. Interface | ✓ |
| *Check Dipole PS (negative) Beamline Interface* | A and B Permits ON, Dipole PS Neg. Interface | ✓ |
| *Check SR RF System C HVPS Beamline Interface* | A and B Permits ON, SR RF System C HVPS Interface | ✓ |
| *Check SR RF System D HVPS Beamline Interface* | A and B Permits ON, SR RF System D HVPS Interface | ✓ |
| *Operator enables SR Dipole PS* | SR Dipole PS is ON | ✓ |
| *Operator enables SR RF System C HVPS* | SR RF System C HVPS is ON | ✓ |
| *Operator enables SR RF System D HVPS* | SR RF System D HVPS is ON | ✓ |
| *Using FE Shutter test fixture, turn on air and open SSs then Photon Shutter* | | ✓ |
| | FE Shutters indicate open (green), HMI | ✓ |
| *Using water trip points in Step A19, lower flow to one meter* | | ✓ |
| | Water Permits A and B OFF, HMI | ✓ |
| Within 5 seconds | FE Shutter Permits A and B OFF, HMI | ✓ |
| | FE Critical Device Permits A and B OFF, HMI | ✓ |
| *Check I/O Box 7 Beamline Enable Panel* | FE Critical Device Permits A and B LEDs OFF | ✓ |
| *Check I/O Box 28 Beamline Enable Panel* | FE Critical Device Permit Sum A and B LEDs OFF | ✓ |
| *Check Control Room SR HMI (Beamline Page)* | FE Critical Device Permits A and B OFF, SR HMI | ✓ |
| *Check SR RF System C HVPS Beamline Interface* | A and B Permits OFF, SR RF System C HVPS Interface | ✓ |
| *Check SR RF System D HVPS Beamline Interface* | A and B Permits OFF, SR RF System D HVPS Interface | ✓ |
| *Check Dipole PS (positive) Beamline Interface* | A and B Permits OFF, Dipole PS Pos. Interface | ✓ |
| *Check Dipole PS (negative) Beamline Interface* | A and B Permits OFF, Dipole PS Neg. Interface | ✓ |
| | SR RF System C HVPS is OFF | ✓ |
| | SR RF System D HVPS is OFF | ✓ |
| | SR Dipole PS is OFF | ✓ |
| *Close FE Shutters with FE Shutter test fixture* | FE Shutters closed | ✓ |
| *Return water flow to recorded level* | | ✓ |
| *Reset fault(s)* | | ✓ |

**A31** ***Observe All Shutters Closed Sum (Ann)***

| | | |
|---|---|---|
| *Check I/O Box 28 Beamline Enable Panel* | FE Shutters closed A chain light ON | ✓ |
| | FE Shutters closed B chain light ON | ✓ |
| *Using FE Shutter test fixture open both FE SSs and then Photon Shutter* | | ✓ |
| | FE Shutters open (**green**), HMI | ✓ |
| *Check I/O Box 28 Beamline Enable Panel* | FE Shutters closed A chain light OFF | ✓ |
| | FE Shutters closed B chain light OFF | ✓ |
| *Close FE Shutters and remove FE Shutter test fixture* | | ✓ |

**A32** ***FOE Area Radiation Monitor***

**Refer to NSLSII-ESH-PRC-007, *Area Radiation Monitor PPS Test* and complete Attachment D, *NSLS-II Beamline (FOE) Area Radiation Monitor Checklist.***

| | |
|---|---|
| FRM 7-ID Test Checklist Completed | ✓ |

**A33** ***Test Completion (Ann)***

| | |
|---|---|
| Inspect all hutch doors and labyrinths to ensure all PPS switch and Maglock actuators have been removed | ✓ |
| Return Beamline enable key and Beamline PPS reset key to the Control Room | ✓ |
| Remove muffler from beam imminent sounder | ✓ |
| Ensure PPS cabinets are secure and locked; challenge locks | ✓ |
| Remove all LOTO | ✓ |
| Inform Lead Operator that testing is complete | ✓ |

## Reviewed by:

Recoverable Signature

X

Scott Buda
Accelerator Safety Systems Group Leader
Signed by: sbuda

12/12/2018

X Robert Chmiel

Robert Chmiel
NSLS-II Safety Officer
Signed by: Chmiel, Robert

## Approved by:

12/13/2018

X

Robert Lee
NSLS-II ESH Manager
Signed by: Lee, Robert J

## Revision History

| Revision | Description | Date |
|---|---|---|
| 1 | First Issue. | 12JAN2018 |
| 2 | Edited required test headers to indicate what will be tested on the annual test of critical devices. Added testing for Vacuum Switch 10 and Photon Shutters 6 and 10. | 12DEC2018 |

The only official copy of this document is the one online in the NSLS-II SharePoint Document Center. Before using a printed copy, verify that it is current by checking the printed document's revision history with that of the online version.



# Attachment D
## NSLS-II Beamline (FOE) Area Radiation Monitor Checklist

**Note:** Signatures below indicate that the test has been completed. DET# IN07649

| | | |
|---|---|---|
| **Monitor #** FBM ID 7 | **ID #** IN07650 | **Beamline:** 7ID |
| **Test Reason:** ☑ **Beamline Certification** | ☐ **Replacement/Repair** | ☐ **Calibration** |
| **Test Date:** 1/15/19 | **Test Result** ☑ **Passed** | ☐ **Failed** |
| **Tester :** Thomas P. McDonald | **RCD:** J. Dobrich | |
| **Tester Signature:** Thomas P. McDonald | **RCD Signature:** [illegible] | |

**Fail Alarm:** Place checkmark (✓) in checkbox (☐) for each correct response.

| | Local Expected Observation | HMI/CR Expected Observation | CR HMI |
|---|---|---|---|
| | | Monitor normal, HMI | ☑ |
| Operator enables Gun HV | Gun HVPS UPA 100 is ON ☑ | Gun Contactor ON A Chain | ☑ |
| RCD Disables Monitor | | Alarm sounds in Control Room | ☑ |
| | | Fail alarm ON HMI (yellow border around ARM icon) | ☑ |
| Silence CR Alarm | | Alarm silences | ☑ |
| Gun turns OFF | Gun HVPS UPA 100 is OFF ☑ | Gun Contactor OFF A Chain | ☑ |
| Return monitor to normal | Gun HVPS remains OFF ☑ | Fail alarm remains ON HMI | ☑ |
| Reset fault in Control Room | | Monitor normal HMI | ☑ |
| RCD ensures ARM is locked | ARM is locked ☑ | | |

**Low Alarm:** Place checkmark (✓) in checkbox (☐) for each correct response.

| | Local Expected Observation | HMI/CR Expected Observation | HMI |
|---|---|---|---|
| Opens FE shutter (w/keypad) | FE Shutters open ☑ | | ☑ |
| Apply source until low alarm | Yellow light on Monitor ☑ | | ☑ |
| | FE Shutters Closed ☑ | Alarm sounds in Control Room | ☑ |
| | | Low level alarm ON, HMI | ☑ |
| Return monitor to normal | | Monitor normal, HMI | ☑ |
| | | FE Critical Device Permit A chain ON | ☑ |
| Open FE shutter (w/test box) | | | ☑ |
| Apply source until low alarm | Yellow light on Monitor ☑ | | ☑ |
| | | FE Critical Device Permit A chain OFF | ☑ |
| Return monitor to normal | | Monitor normal, HMI | ☑ |
| Reset fault | | | ☑ |

**High Alarm:** Place checkmark (✓) in checkbox (☐) for each correct response.

| | Local Expected Observation | HMI/CR Expected Observation | HMI |
|---|---|---|---|
| Operator enables Gun HV | Gun HVPS UPA 100 is ON ☑ | Gun Contactor ON A Chain | ☑ |
| Apply source until high alarm | Red light on Monitor ☑ | | ☑ |
| | Monitor alarm sounds | Alarm sounds in Control Room | ☑ |
| | | High level alarm ON, HMI | ☑ |
| Silence Alarm | | Alarm silences | ☑ |
| Gun turns OFF | Gun HVPS UPA 100 is OFF ☑ | Gun Contactor OFF A Chain | ☑ |
| Return monitor to normal | Gun HVPS remains OFF ☑ | High level alarm remains ON, HMI | ☑ |
| Reset fault in Control Room | | Monitor normal, HMI | ☑ |

**Description of Test Failures (if any):**_____

| REV | DESCRIPTION | BY | DATE | CHK | APP |
|---|---|---|---|---|---|
| A | INITIAL RELEASE | SEJ | 1/26/2018 | JM | AS |
| B | REVISED PER ECN LT-ECN-019-2093 | SEJ | 1/10/2019 | JM | AS |

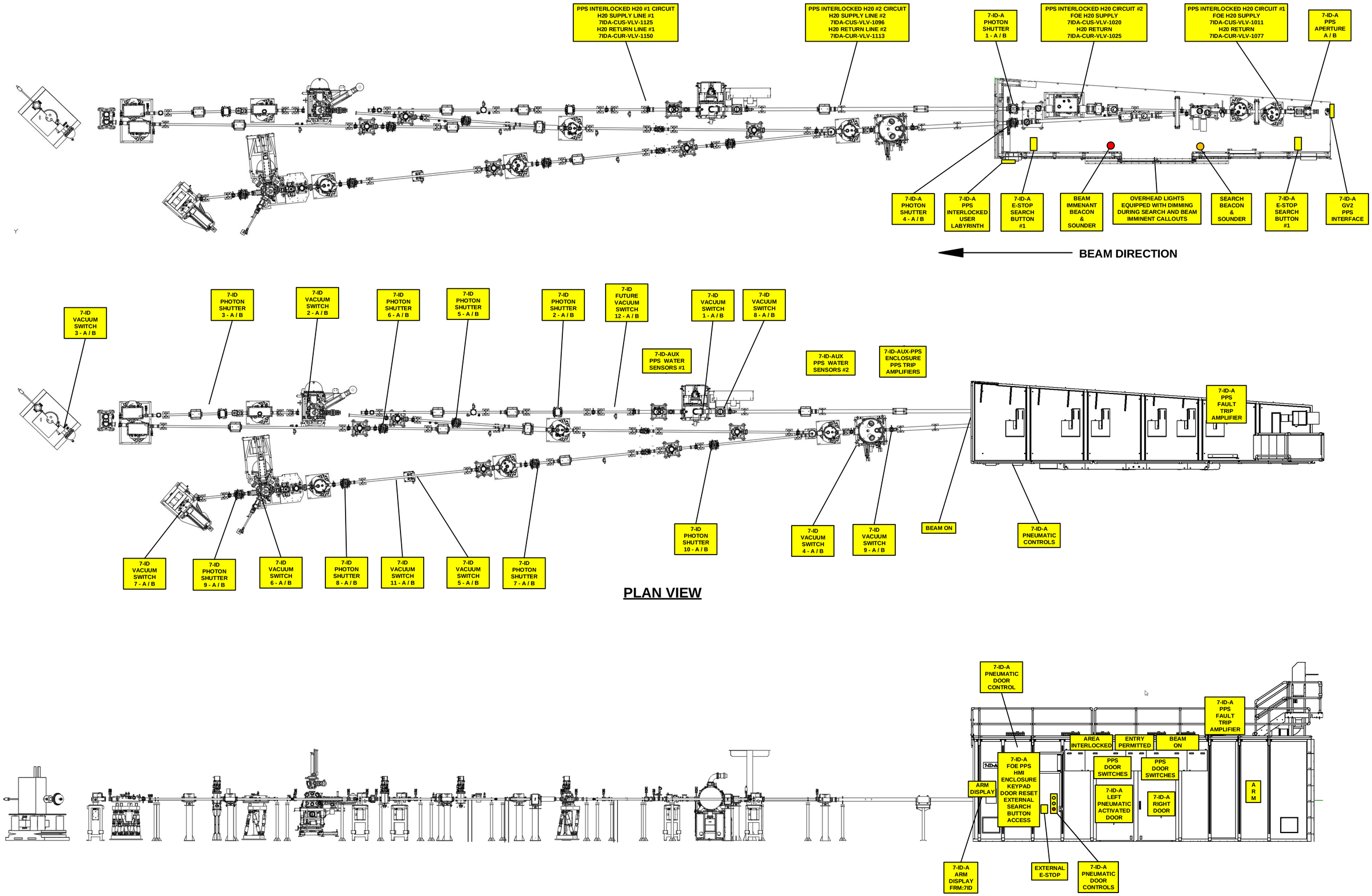


BROOKHAVEN NATIONAL LABORATORY

BROOKHAVEN NATIONAL LABORATORY
BROOKHAVEN SCIENCE ASSOCIATES
UPTON, NEW YORK 11973

*Exploring Life's Mysteries, Protecting Its Future*

NSLS II
NATIONAL SYNCHROTRON LIGHT SOURCE II

UNLESS OTHERWISE SPECIFIED
INTEGER TOLERANCES ± .06
DECIMAL TOLERANCES
.X ± .030
.XX ± .015
.XXX ± .010
ANGULAR TOLERANCE ± 0.5°
UNSPECIFIED RADII .02 MAX
125 BREAK SHARP CORNERS AND EDGES
FINISH MAX .03 MIN .005

UNLESS OTHERWISE SPECIFIED
DIMENSIONS ARE IN INCHES
DIMENSIONS IN [ ] ARE MILLIMETERS EQUIV. FOR REF. ONLY
INTERPRET DRAWING AS PER ANSI Y14.5 OR Y32.2

ESH&Q RISK LEVEL A-2

| | | DATE |
|---|---|---|
| DRWN BY | S. JARZABKOWSKI | 1/26/2018 |
| CHK BY | J. MALLEY | 1/26/2018 |
| ENG APP | S. BUDA | 1/26/2018 |
| SUPV APP | G. GANETIS | 1/26/2018 |
| QA APP | E. CHESWICK | 1/26/2018 |
| ESH APP | R. LEE | 1/26/2018 |

OUTSTANDING ECN'S

# PPS EQUIPMENT LAYOUT DRAWING, FOR 7-ID HUTCH (SST)

LT-EL-BL-EI (DRAWING DIRECTORY) | LT-EL-BL-EI-HCH-1070 (DRAWING NUMBER) | B (REV)

COMPUTER REPRODUCABLE | SCALE : N/A | SHEET 1 OF 1

JOB NUMBER | USED ON DWG. NO.

LT-EL-BL-EI-HCH-1070

# FIRMWARE/SOFTWARE/PROGRAMMING LOGIC

**DESCRIPTION:**

**7-ID A CHAIN BEAMLINE PPS PLC PROGRAM**

| | | |
|---|---|---|
| **PROGRAM** | **SIEMENS STEP 7** | |
| **VERSION** | **VERSION 5.5 + SP4** | |
| **DEVICE** | **SIEMENS CPU319F-3-PN/DP** | |
| **OPERATING SYSTEM** | **WINDOWS** | |
| **PROGRAMMING LANGUAGE** | **LADDER LOGIC** | |
| **FILE** | **NSLS II Beamline_ID7 REV D** | |
| **SAFETY SIGNATURE** | | |

| REV | DESCRIPTION | BY | DATE | CHK | APP |
|---|---|---|---|---|---|
| A | INITIAL RELEASE | EO | 01/10/18 | MP | SB |
| B | REVISED PER ECN # 018-1910 | EO | 02/06/18 | MP | SB |
| C | REVISED PER ECN # 018-2017 | EO | 11/08/18 | MP | SB |
| D | REVISED PER ECN # 019-2052 | EO | 11/08/18 | MP | SB |

LT-EL-BL-EI-PPS-1070-70

BROOKHAVEN NATIONAL LABORATORY

BROOKHAVEN NATIONAL LABORATORY
BROOKHAVEN SCIENCE ASSOCIATES
UPTON, NEW YORK 11973
*Exploring Life's Mysteries, Protecting its Future*

NSLS II
NATIONAL SYNCHROTRON LIGHT SOURCE II

UNLESS OTHERWISE SPECIFIED
INTEGER TOLERANCES
± .06
DECIMAL TOLERANCES
.X ± .030
.XX ± .015
.XXX ± .010
ANGULAR TOLERANCE ± 0.5°
UNSPECIFIED RADII .02 MAX
125 BREAK SHARP CORNERS AND EDGES
FINISH MAX .03 MIN .005

UNLESS OTHERWISE SPECIFIED
DIMENSIONS ARE IN INCHES
DIMENSIONS IN [ ; ; ] ARE
MILLIMETERS EQUIV. FOR REF. ONLY

ESH&Q RISK LEVEL A-1

INTERPRET DRAWING AS PER ANSI Y14.5 OR Y32.2

| | | DATE | OUTSTANDING ECN'S |
|---|---|---|---|
| DRWN BY | S.BUDA | 01/10/18 | |
| CHK BY | M.PFEFFER | 01/10/18 | |
| ENG APP | S.BUDA | 01/10/18 | |
| SUPV APP | G.GANETIS | 01/12/18 | |
| QA APP | E.CHESWICK | 01/11/18 | |
| ESH APP | B.LEE | 01/11/18 | |

PROGRAMMABLE LOGIC

**7-ID A CHAIN BEAMLINE PPS PLC PROGRAM**

| | | |
|---|---|---|
| LT-EL-BL-EI (DRAWING DIRECTORY) | LT-EL-BL-EI-PPS-1070-70 (DRAWING NUMBER) | D (REV) |

COMPUTER REPRODUCIBLE | SCALE: N/A | SHEET 1 OF 1

| JOB NUMBER | USED ON DWG. NO. |
|---|---|
| | |

# FIRMWARE/SOFTWARE/PROGRAMMING LOGIC

**DESCRIPTION:**

**7-ID B CHAIN BEAMLINE PPS PLC PROGRAM**

| | | |
|---|---|---|
| **PROGRAM** | **RS LOGIX 5000** | |
| **VERSION** | **20.03** | |
| **DEVICE** | **ALLEN BRADLEY 1768 L43S SAFETY PLC** | |
| **OPERATING SYSTEM** | **WINDOWS** | |
| **PROGRAMMING METHOD** | **LADDER** | |
| **FILE** | **ID7_B_PLC_20190103.ACD** | |
| | | |

| REV | DESCRIPTION | BY | DATE | CHK | APP |
|---|---|---|---|---|---|
| A | INITIAL RELEASE | SX | 01/10/18 | MP | SB |
| B | REVISED PER ECN #018-2012 | SX | 09/17/18 | MP | SB |
| B | REVISED PER ECN #018-2064 | SX | 01/09/19 | MP | SB |
| | | | | | |

LT-EL-BL-EI-PPS-1070-71

BROOKHAVEN NATIONAL LABORATORY

BROOKHAVEN NATIONAL LABORATORY
BROOKHAVEN SCIENCE ASSOCIATES
UPTON, NEW YORK 11973
*Exploring Life's Mysteries, Protecting its Future*

NSLS II
NATIONAL SYNCHROTRON LIGHT SOURCE II

UNLESS OTHERWISE SPECIFIED
INTEGER TOLERANCES ± .06
DECIMAL TOLERANCES
.X ± .030
.XX ± .015
.XXX ± .010
ANGULAR TOLERANCE ± 0.5°
UNSPECIFIED RADII .02 MAX
125 BREAK SHARP CORNERS AND EDGES
FINISH MAX .03 MIN .005

UNLESS OTHERWISE SPECIFIED
DIMENSIONS ARE IN INCHES
DIMENSIONS IN [*, **] ARE
MILLIMETERS EQUIV. FOR REF. ONLY

INTERPRET DRAWING AS PER ANSI Y14.5 OR Y32.2

ESH&Q RISK LEVEL A-1

OUTSTANDING ECN'S •

| | | DATE |
|---|---|---|
| DRWN BY | S.Xin | 01/10/18 |
| CHK BY | M.PFEFFER | 01/10/18 |
| ENG APP | S.BUDA | 01/10/18 |
| SUPV APP | G.GANETIS | 01/12/18 |
| QA APP | E.CHESWICK | 01/11/18 |
| ESH APP | B.LEE | 01/11/18 |

PROGRAMMABLE LOGIC
**NSLS II B CHAIN BEAMLINE PPS PLC PROGRAM (7-ID)**

LT-EL-BL-IN — DRAWING DIRECTORY
LT-EL-BL-EI-PPS-1070-71 — DRAWING NUMBER
C — REV

COMPUTER REPRODUCIBLE
SCALE: N/A
SHEET 1 OF 1

JOB NUMBER
USED ON DWG. NO.