REVISION HISTORY					
REV	DESCRIPTION	DATE	DESIGNER	CHECKED BY	ENGINEER
A	RELEASE PER ECO-005819	04/2019	J.FABIJANIC	R.GAMBELLA	S.OHARA

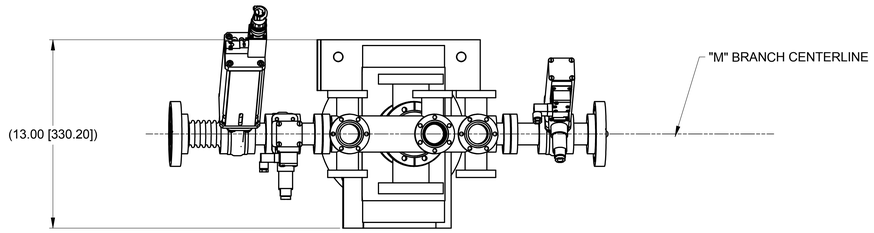

TOP VIEW
SCALE 1 : 4

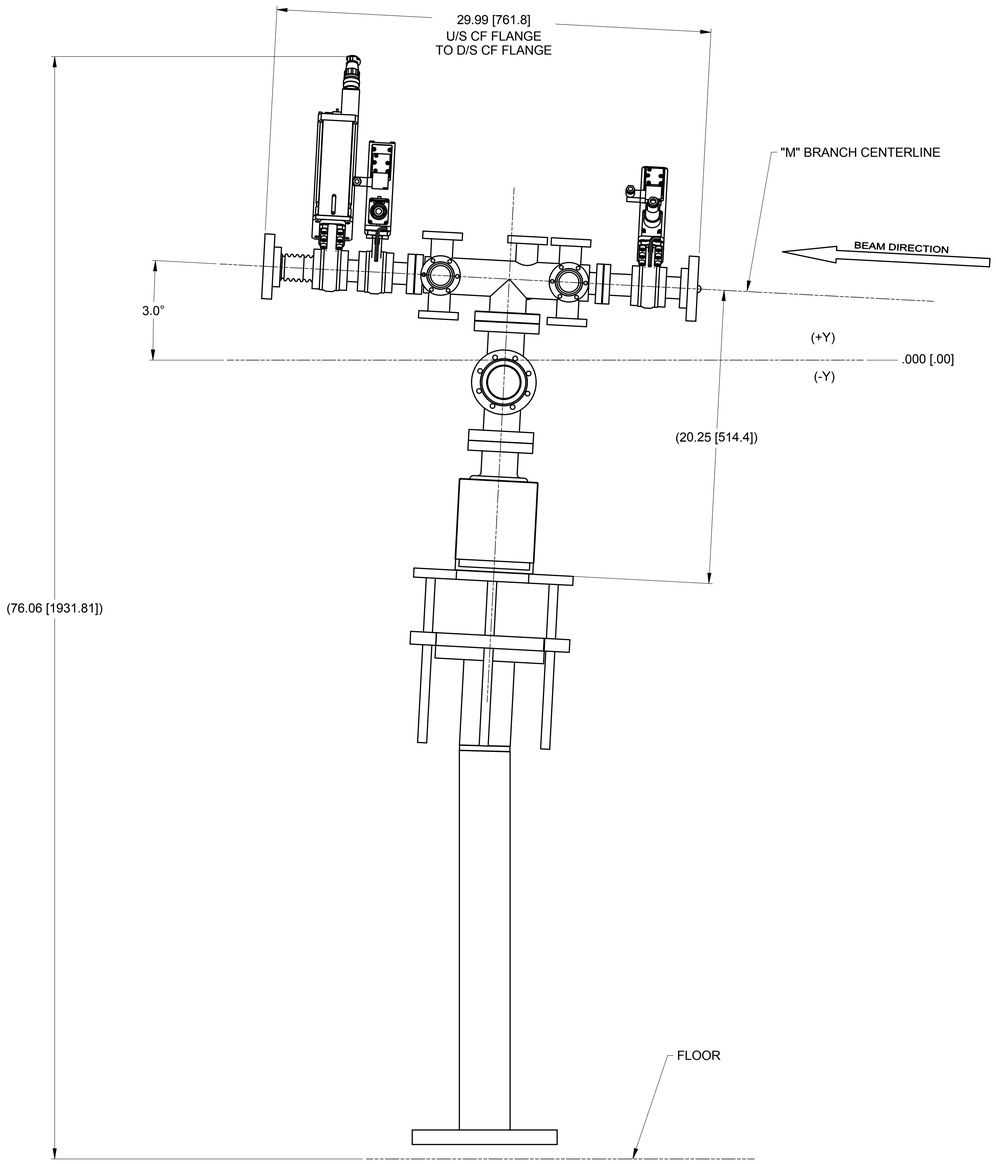

SIDE VIEW
(LOOKING INBOARD)
SCALE 1 : 4

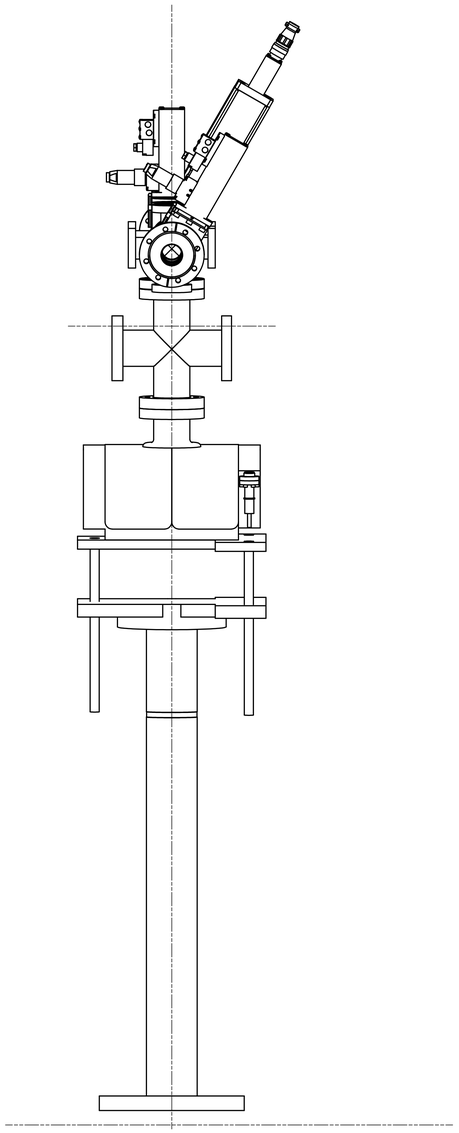

END VIEW
(LOOKING DOWNSTREAM)
SCALE 1 : 4

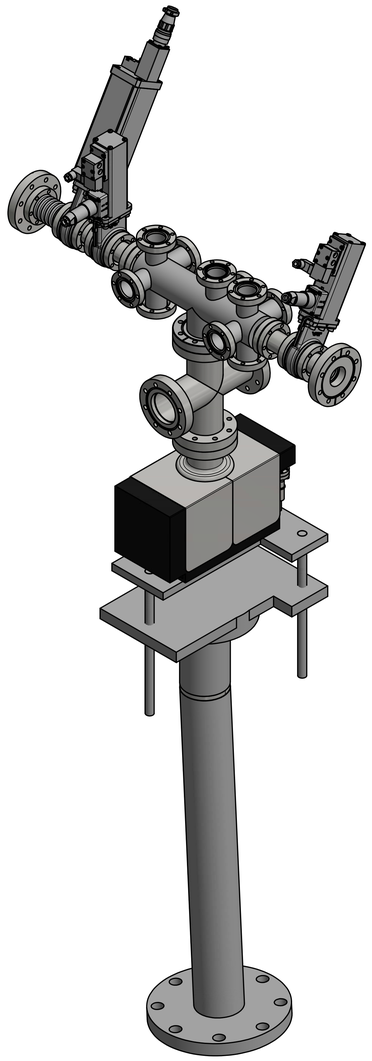

ISO VIEW
SCALE 1 : 4

NOTES:

1. THE REQUIRED CHAMBER PRESSURES ARE 5X10-7 TORR FOR COMMISSIONING AND 3X10-7 TORR FOR OPERATIONS .

INTERFACE CONTROL DRAWING

UNLESS OTHERWISE SPECIFIED
ALL DIMENSIONS ARE IN INCHES
DIMENSIONS IN BRACKETS [xx.xx] (WHERE PRESENT) ARE MILLIMETERS AND ARE FOR REFERENCE ONLY
INTERPRET DRAWING AS PER ASME Y14.5-1994 OR Y32.2-1975

DIMENSIONAL TOLERANCES: X ± 0.060, .X ± 0.030, .XX ± 0.015, .XXX ± 0.005
ANGULAR TOLERANCE: ± .5°
FINISH: 125
BREAK EDGES & SHARP CORNERS 0.005 MIN. TO 0.015 MAX

THIRD ANGLE PROJECTION
SCALE: SEE DWG VIEW

BROOKHAVEN NATIONAL LABORATORY
BROOKHAVEN NATIONAL LABORATORY
BROOKHAVEN SCIENCE ASSOCIATES
UPTON, NEW YORK 11973
Exploring Life's Mysteries, Protecting its Future

NSLS II NATIONAL SYNCHROTRON LIGHT SOURCE II

DRAWN BY	J.FABIJANIC	1/9/2015
CHECKED BY	R.GAMBELLA	4/2019
VACUUM APPROVAL		
ENGINEER APPROVAL	S.OHARA	4/2019
SUPERVISOR APPROVAL	D.FISCHER	4/2019
ES&H APPROVAL	L.STIEGLER	4/2019
QA APPROVAL	J.ZIPPER	4/2019

WBS# 7.02.03

PHOTON DIVISION
SST BEAMLINE
IO UP SECTION, ASSY

SHEET SIZE: E
DRAWING/PART NUMBER: PD-SST-BL-1030
REVISION: A
ESH&Q RISK LEVEL: A2
SHEET 1 OF 1

NEXT ASSY: PD-SST-BL-1001
PROJECT: PBN

C:\Mech-Engr\TYPD\SST\BL\PD-SST-BL-1030.dw

RELEASED + EFFECTIVE

REVISION HISTORY					
REV	DESCRIPTION	DATE	DESIGNER	CHECKED BY	ENGINEER
A	RELEASED PER ECO-005818	04/2019	J.FABIJANIC	R.GAMBELLA	S.OHARA

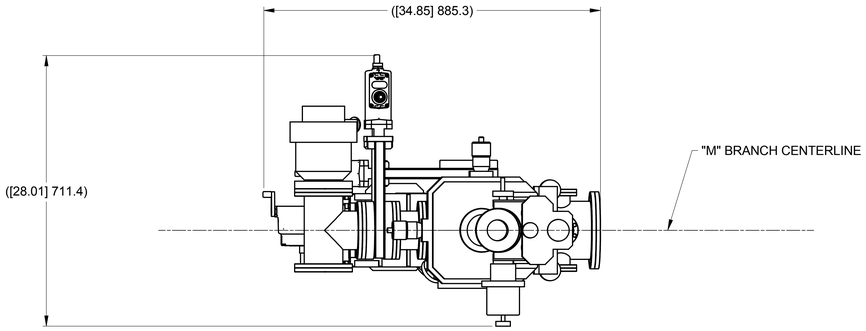

TOP VIEW
SCALE 1 : 6

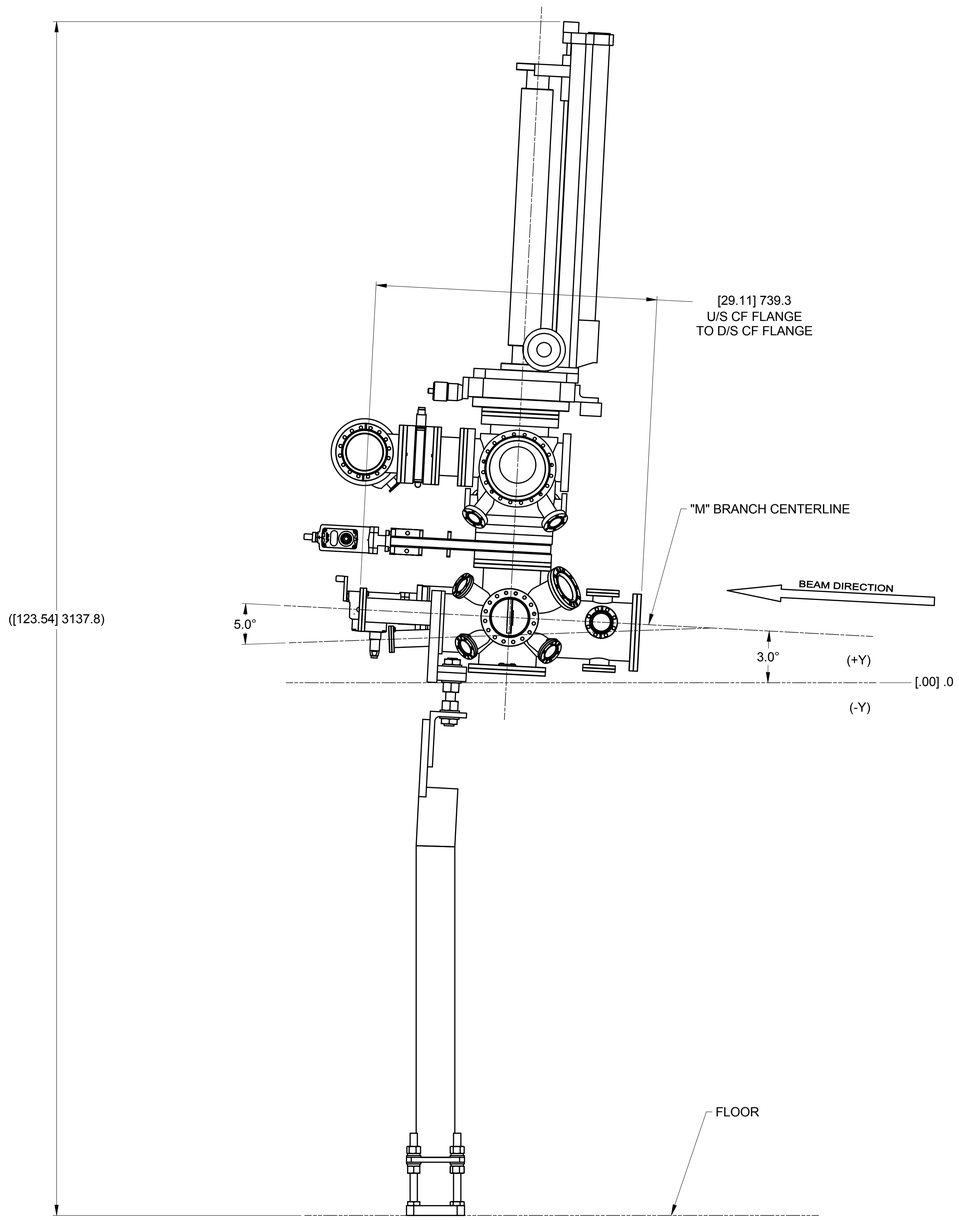

SIDE VIEW
(LOOKING INBOARD)
SCALE 1 : 6

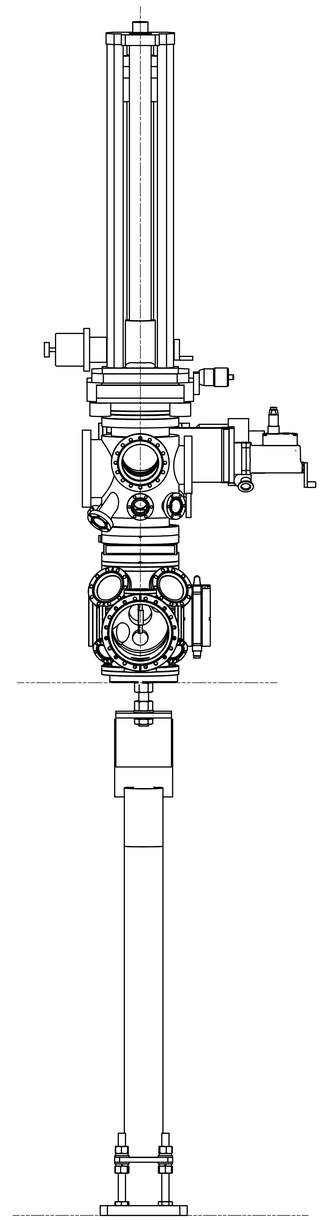

END VIEW
(LOOKING DOWNSTREAM)
SCALE 1 : 6

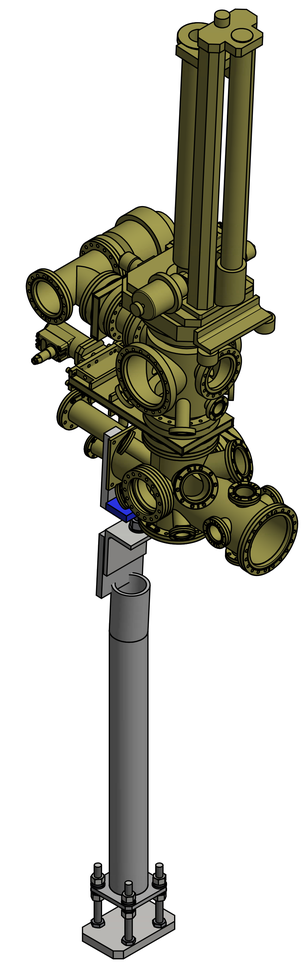

ISO VIEW
SCALE 1 : 6

INTERFACE CONTROL DRAWING

NOTES:

1. THE REQUIRED CHAMBER PRESSURES ARE 5X10-7 TORR FOR COMMISSIONING AND 3X10-7 TORR FOR OPERATIONS .

UNLESS OTHERWISE SPECIFIED
ALL DIMENSIONS ARE IN INCHES
DIMENSIONS IN BRACKETS [xx.xx] (WHERE PRESENT) ARE MILLIMETERS AND ARE FOR REFERENCE ONLY
INTERPRET DRAWING AS PER ASME Y14.5-1994 OR Y32.2-1975

DIMENSIONAL TOLERANCES: X ± 0.060, .X ± 0.030, .XX ± 0.015, .XXX ± 0.005
ANGULAR TOLERANCE: ± .5°
FINISH: 125
BREAK EDGES & SHARP CORNERS 0.005 MIN. TO 0.015 MAX

BROOKHAVEN NATIONAL LABORATORY
BROOKHAVEN NATIONAL LABORATORY
BROOKHAVEN SCIENCE ASSOCIATES
UPTON, NEW YORK 11973
Exploring Life's Mysteries, Protecting its Future

NSLSII NATIONAL SYNCHROTRON LIGHT SOURCE II

DRAWN BY	J.FABIJANIC	11/14/2014
CHECKED BY	R.GAMBELLA	04/2019
VACUUM APPROVAL		
ENGINEER APPROVAL	S.OHARA	04/2019
SUPERVISOR APPROVAL	D.FISCHER	04/2019
ES&H APPROVAL	L.STIEGLER	04/2019
QA APPROVAL	J.ZIPPER	04/2019

PHOTON DIVISION
SST BEAMLINE
MICROCALORIMETER, ASSY

SHEET SIZE: E
DRAWING/PART NUMBER: PD-SST-MCAL-1000
REVISION: A

NEXT ASSY: PD-SST-BL-1001
PROJECT: PBN
THIRD ANGLE PROJECTION
SCALE: SEE DWG VIEW
WBS# 7.02.03
ES&H&Q RISK LEVEL: A2
SHEET 1 OF 1

C:\Mech-Eng\LTP\PD\SST\MCAL\PD-SST-MCAL-1000.dw

RELEASED + EFFECTIVE

REVISION HISTORY					
REV	DESCRIPTION	DATE	DESIGNER	CHECKED BY	ENGINEER
A	RELEASED PER ECO-005767	4/2019	J.FABJANIC	R.GAMBELLA	S.O'HARA

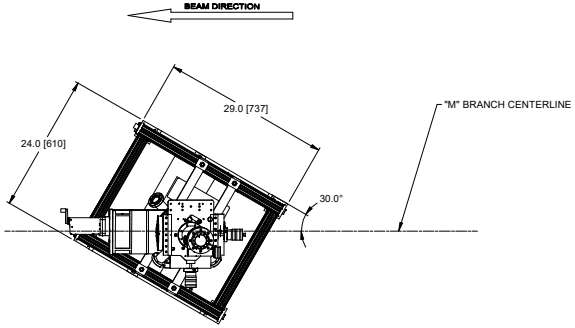

TOP VIEW
SCALE 1 : 8

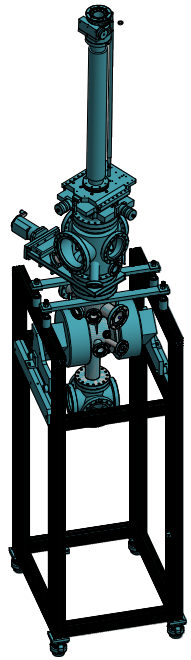

ISO VIEW
(LOOKING DOWNSTREAM
SCALE 1 : 8

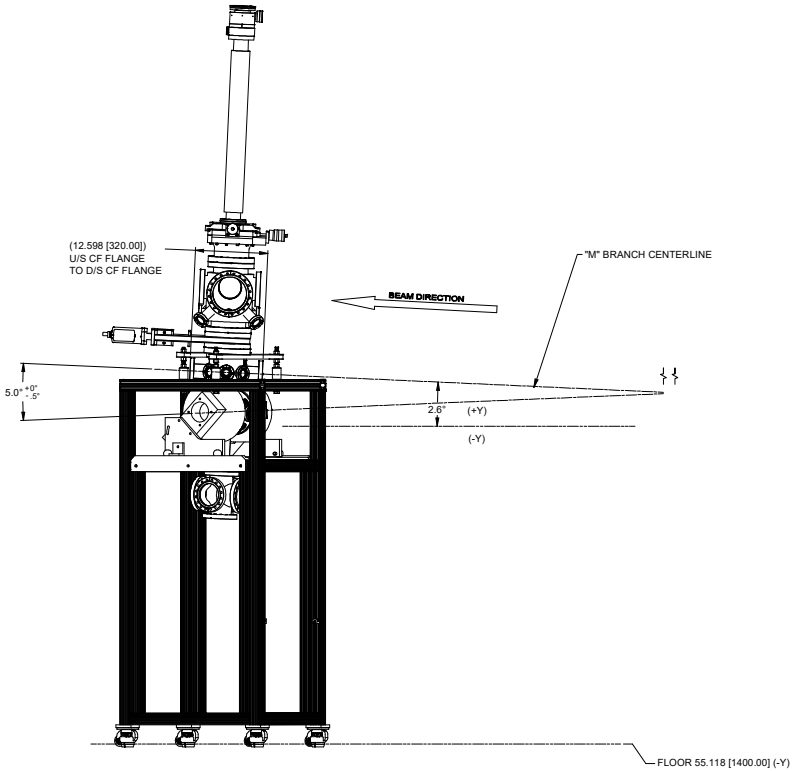

SIDE VIEW
(LOOKING INBOARD)
SCALE 1 : 8

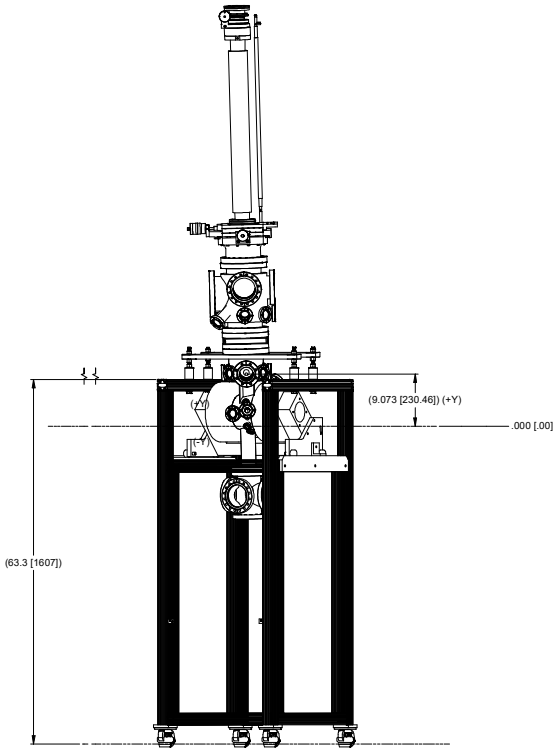

END VIEW
(LOOKING DOWNSTREAM)
SCALE 1 : 8

NOTES:

1. THE REQUIRED CHAMBER PRESSURES ARE 5X10-7 TORR FOR COMMISSIONING AND 3X10-7 TORR FOR OPERATIONS .
2. SEE DRAWING PD-SST-BL-LAY-1070 SURVEY AND ALIGNMENT DRAWING FOR CONFIGURATION CONTROL OF CHAMBER TO BE USED AS STOP.

INTERFACE CONTROL DRAWING

UNLESS OTHERWISE SPECIFIED
ALL DIMENSIONS ARE IN INCHES
DIMENSIONS ARE FOR REFERENCE ONLY
DO NOT SCALE DRAWING

THIS DRAWING IS PER ASME Y14.5-1994 UNLESS NOTED

DIMENSIONS	TOLERANCES	MATERIAL	FINISH
X ± 0.060	± 0°		
.X ± 0.030			
.XX ± 0.010	ANGLES		
.XXX ± 0.005	±0.5°		

DO NOT SCALE DRAWING

THIRD ANGLE PROJECTION

SCALE: SEE DWG VIEW

BROOKHAVEN NATIONAL LABORATORY
BROOKHAVEN NATIONAL LABORATORY
UPTON, NEW YORK 11973
Exploring Life's Mysteries
Powering the Future

DRAWN BY	fabjanic	11/14/2018
CHECKED BY	R.GAMBELLA	04/2019
CONCURRENCE (MECHANICAL ENGINEER)	S.O'HARA	04/2019
CONCURRENCE (ESH&Q)	D.FISCHER	04/2019
CONCURRENCE (PROJECT ENGINEER)	J. STIEGLER	04/2019
QA APPROVAL	J.ZIPPER	04/2019

NSLS II
NATIONAL SYNCHROTRON LIGHT SOURCE II

PHOTON DIVISION
SST BEAMLINE
MICROSCOPE, LARIAT I

NEXT ASSY:	PD-SST-BL-1001		
PROJECT: PBN		WBS# 7.02.03	

E — SIZE
PD-SST-MICR-1000 — DRAWING/PART NUMBER
A — REVISION
ESH&Q RISK LEVEL: A2
SHEET 1 OF 1

C:\Brookhaven\pro\PD-SST-TMR-DFD-BL-TMR-001.dwg

RELEASED – EFFECTIVE

REVISION HISTORY					
REV	DESCRIPTION	DATE	DESIGNER	CHECKED BY	ENGINEER
A	RELEASED PER ECO-005816	04/2019	J.FABIJANIC	R.GAMBELLA	S.OHARA

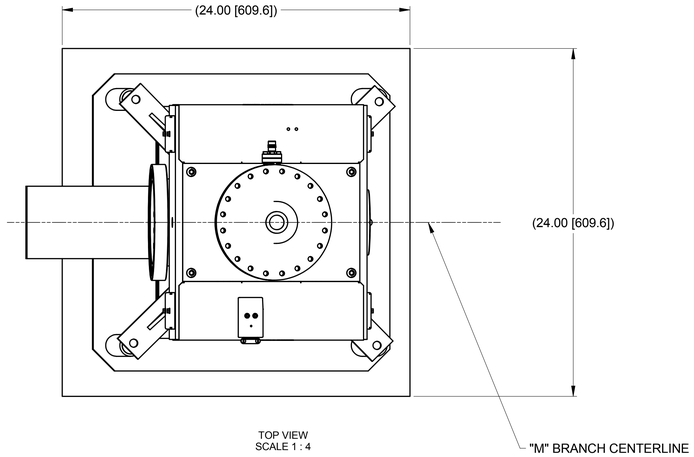

TOP VIEW
SCALE 1 : 4

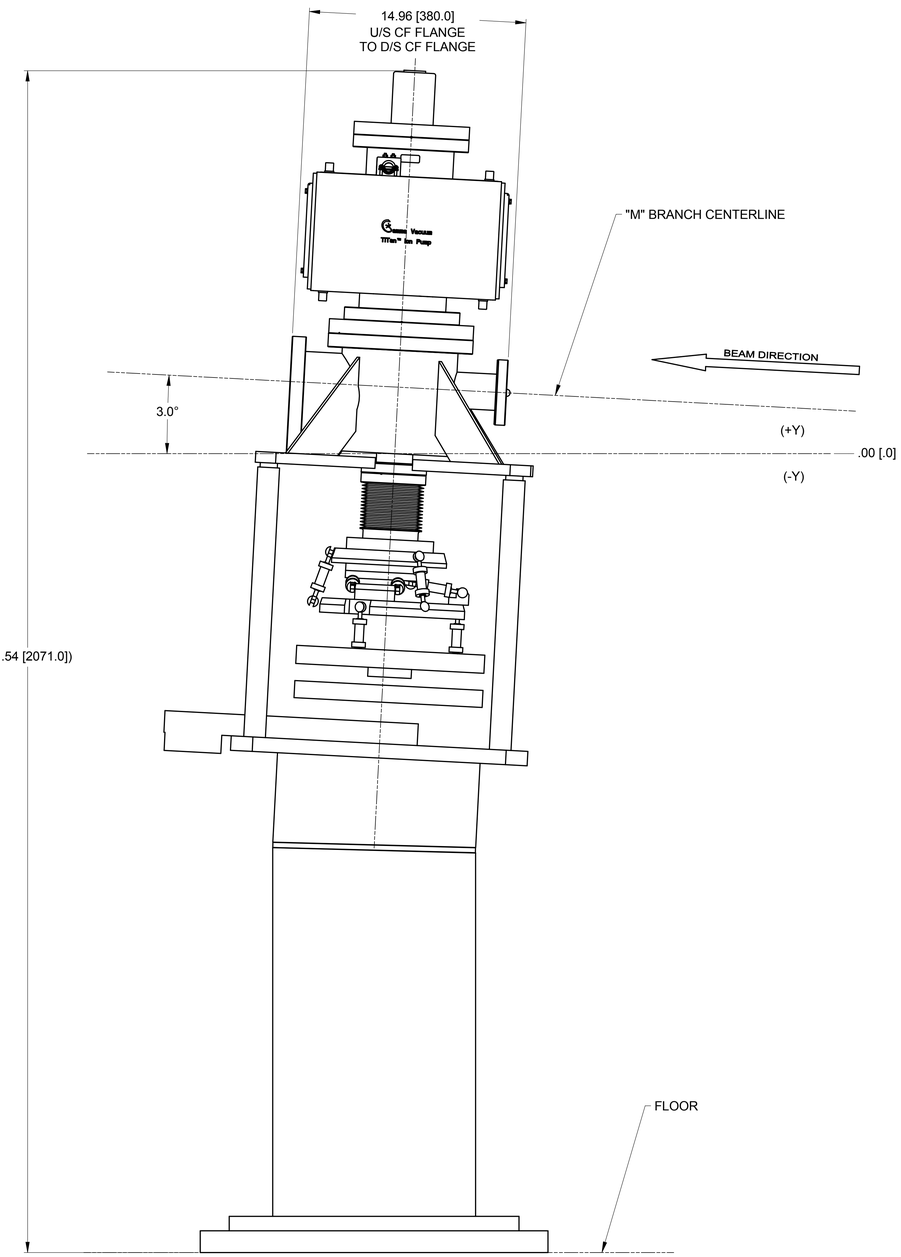

SIDE VIEW
(LOOKING INBOARD)
SCALE 1 : 4

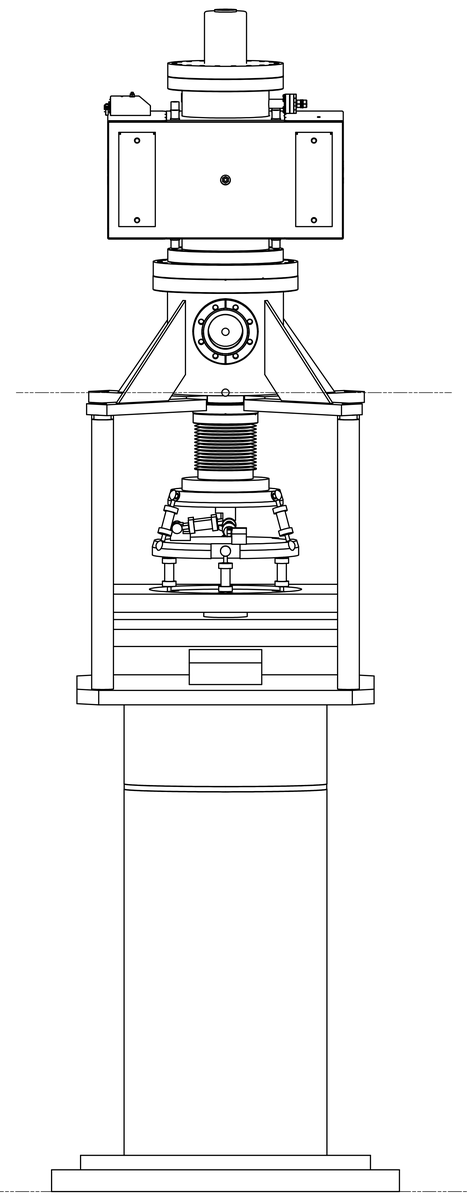

END VIEW
(LOOKING DOWNSTREAM)
SCALE 1 : 4

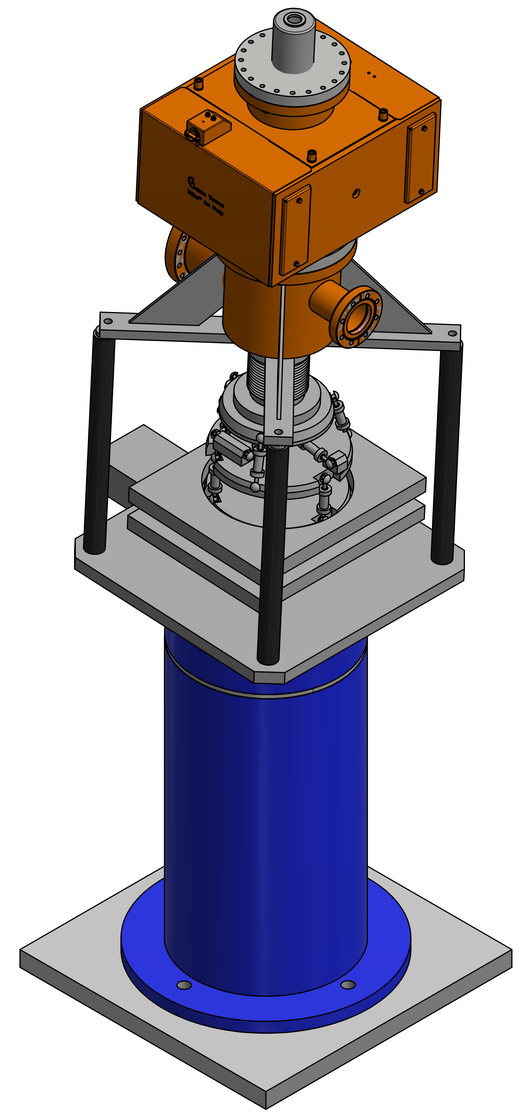

ISO VIEW
SCALE 1 : 4

NOTES:

1. THE REQUIRED CHAMBER PRESSURES ARE 5X10-7 TORR FOR COMMISSIONING AND 3X10-7 TORR FOR OPERATIONS .

INTERFACE CONTROL DRAWING

UNLESS OTHERWISE SPECIFIED
ALL DIMENSIONS ARE IN INCHES
DIMENSIONS IN BRACKETS [xx.xx] (WHERE PRESENT) ARE MILLIMETERS AND ARE FOR REFERENCE ONLY
INTERPRET DRAWING AS PER ASME Y14.5-1994 OR Y32.2-1975

DIMENSIONAL TOLERANCES: X ± 0.060, .X ± 0.030, .XX ± 0.015, .XXX ± 0.005
ANGULAR TOLERANCES: ± .5°
FINISH: 125
BREAK EDGES & SHARP CORNERS 0.005 MIN. TO 0.015 MAX

THIRD ANGLE PROJECTION
SCALE: SEE DWG VIEW

BROOKHAVEN NATIONAL LABORATORY
BROOKHAVEN NATIONAL LABORATORY
BROOKHAVEN SCIENCE ASSOCIATES
UPTON, NEW YORK 11973
Exploring Life's Mysteries, Protecting its Future

NSLS II NATIONAL SYNCHROTRON LIGHT SOURCE II

DRAWN BY	J.FABIJANIC	1/9/2015
CHECKED BY	R.GAMBELLA	4/2019
VACUUM APPROVAL	-	-
ENGINEER APPROVAL	S.OHARA	4/2019
SUPERVISOR APPROVAL	D.FISCHER	4/2019
ES&H APPROVAL	L.STIEGLER	4/2019
QA APPROVAL	J.ZIPPER	4/2019

PHOTON DIVISION
SST BEAMLINE
MIRROR, ASSY, M5W

SHEET SIZE: E
DRAWING/PART NUMBER: PD-SST-MIR-1000
REVISION: A
ESH&Q RISK LEVEL: A2
SHEET 1 OF 1

NEXT ASSY: PD-SST-BL-1001
PROJECT: PBN
WBS# 7.02.03

C:\Mech-Eng\LT\PD\SST\MIR\PD-SST-MIR-1000.dw

RELEASED + EFFECTIVE