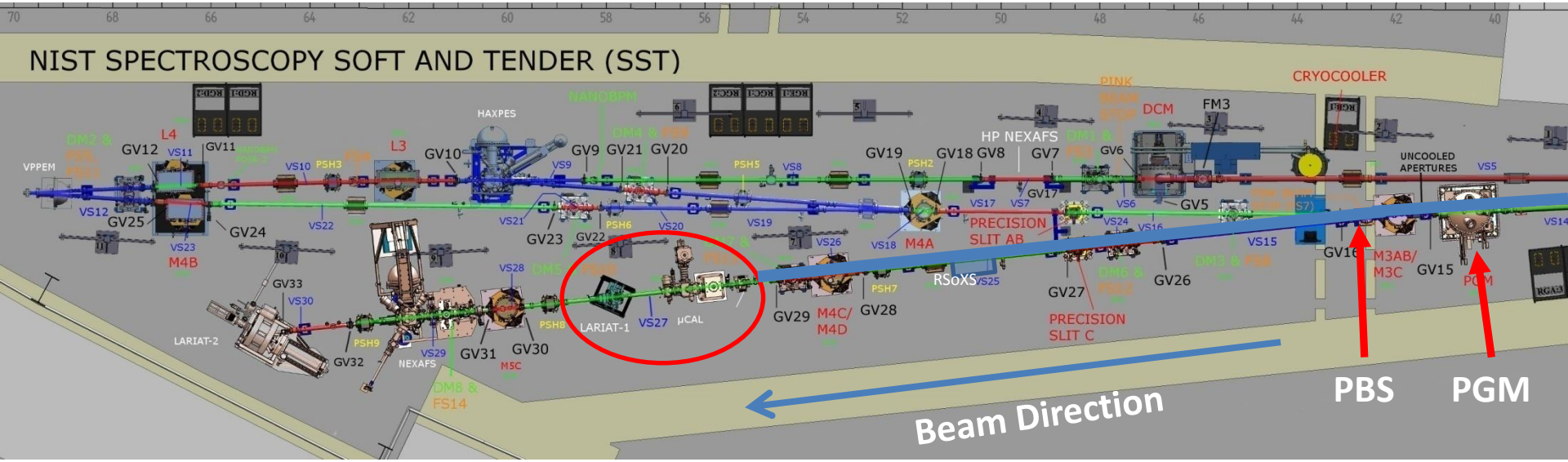
NIST SPECTROSCOPY SOFT AND TENDER (SST)
VPPEM
DM2 & FS12
L4
GV12
VS11
GV11
VS10
PSH3
L3
GV10
HAXPES
NANOBPM
DM4 & FS9
GV9
GV21
GV20
VS9
PSH5
VS8
GV19
PSH2
GV18
GV8
HP NEXAFS
GV7
DM1 & FS3
GV6
PINK BEAM STOP
DCM
FM3
CRYOCOOLER
UNCOOLED APERTURES
VS5
VS12
GV25
GV24
VS22
VS21
GV23
GV22
PSH6
VS20
VS19
VS17
VS7
GV17
VS6
GV5
VS24
VS16
VS15
VS14
VS23
M4B
VS28
DM5
FS13
VS26
VS18
M4A
PRECISION SLIT AB
RSoXS
VS25
GV27
DM6 & FS12
GV26
DM3 & FS8
GV16
M3AB/ M3C
GV15
PGM
GV33
VS30
LARIAT-2
PSH9
GV32
NEXAFS
VS29
GV31
GV30
M5C
PSH8
LARIAT-1
VS27
µCAL
GV29
M4C/ M4D
GV28
PSH7
PRECISION SLIT C
DM8 & FS14
Beam Direction
PBS
PGM

REVISION HISTORY					
REV	DESCRIPTION	DATE	DESIGNER	CHECKED BY	ENGINEER
A	RELEASED PER ECO-005800	4/2019	J.FABIJANIC	R.GAMBELLA	S.O'HARA

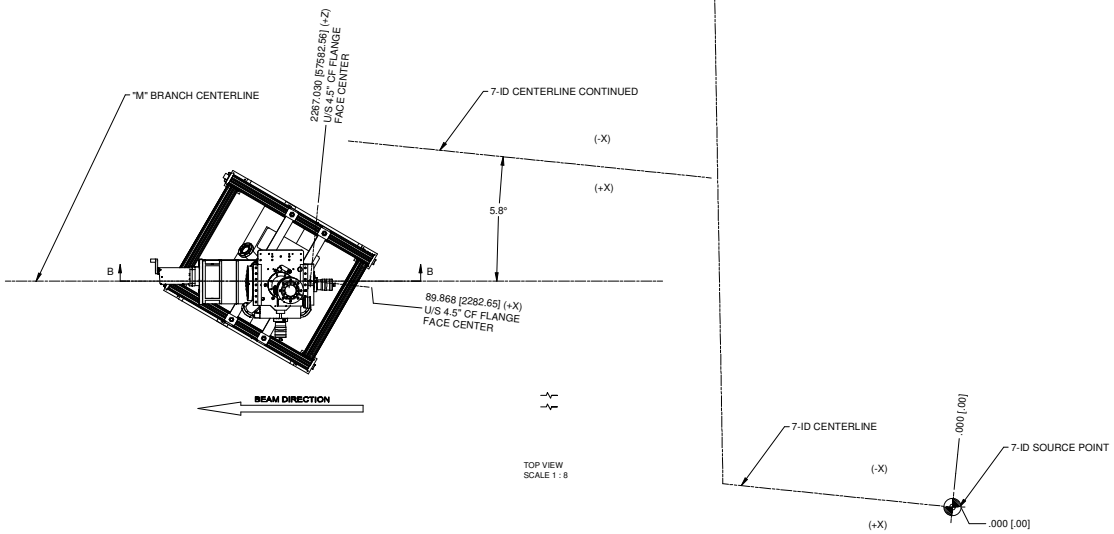

TOP VIEW
SCALE 1 : 8

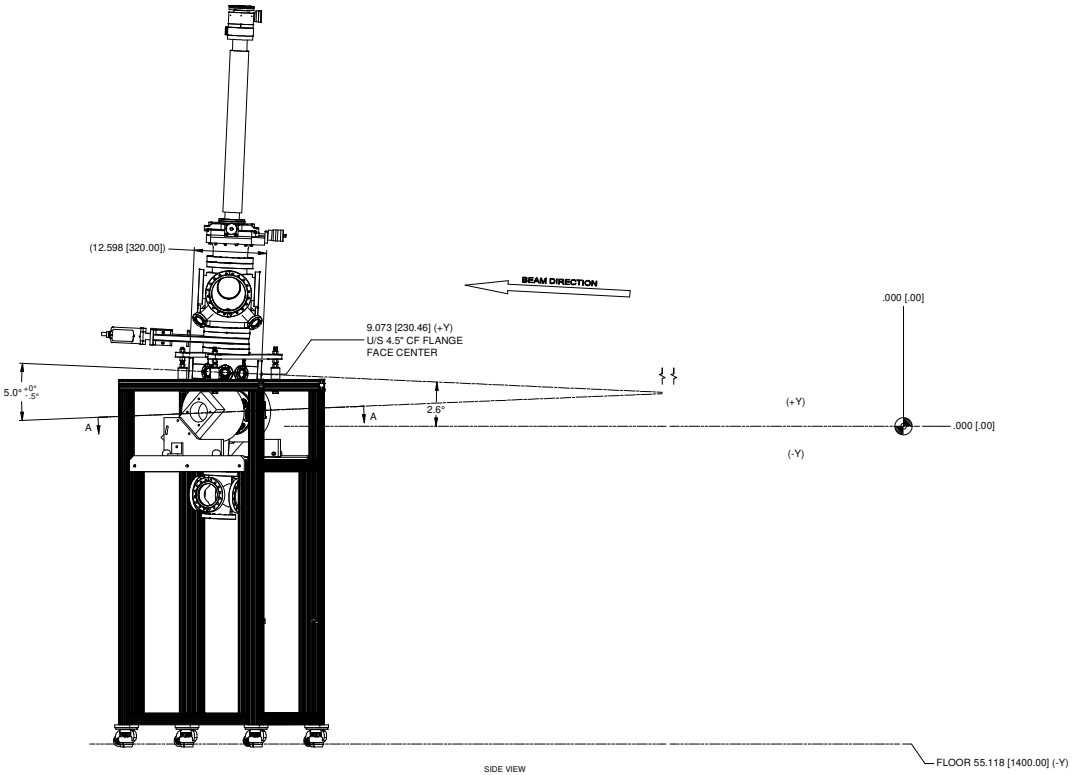

SIDE VIEW
(LOOKING INBOARD)
SCALE 1 : 8

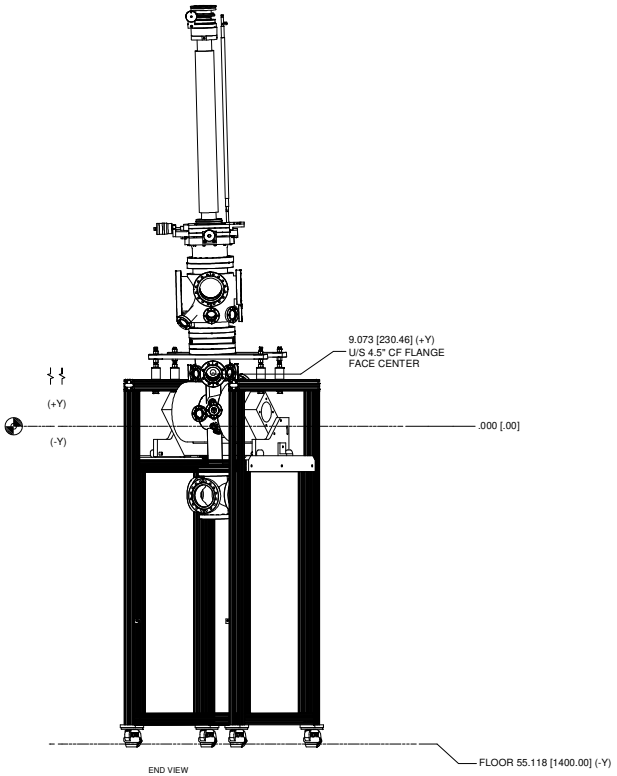

END VIEW
(LOOKING DOWNSTREAM)
SCALE 1 : 8

NOTES:

1. UNLESS OTHERWISE SPECIFIED, ALL DIMENSIONS ARE TAKEN FROM THE 7-ID CENTER OF STRAIGHT.
2. ALL (X), (Y) DIMENSION TOLERANCES TO BE +/-10mm FROM SOURCE. ALL (Z) DIMENSION TOLERANCES TO BE +/-30mm FROM SOURCE UNLESS OTHERWISE NOTED.

UNLESS OTHERWISE SPECIFIED
ALL DIMENSIONS ARE IN INCHES
DIMENSIONS ARE FOR FINISHED PARTS
DO NOT SCALE DRAWING
DIMENSIONS ARE FOR REFERENCE ONLY
ASSIGNED TOLERANCES ARE FOR ENGINEERING USE ONLY

GENERAL TOLERANCES	REGULAR TOLERANCE
.X ± 0.060	± .5°
.XX ± 0.020	
.XXX ± 0.005	125

SCALE: SEE DWG VIEW

BROOKHAVEN NATIONAL LABORATORY
BROOKHAVEN NATIONAL LABORATORY
BROOKHAVEN NATIONAL LABORATORY
UPTON, NEW YORK 11973
Exploring Life's Mysteries
Powering the Future

DRAWN BY	J.FABIJANIC	11/14/2018
CHECKED BY	R.GAMBELLA	04/2019
CHECKED DIMENSIONS	S.O'HARA	04/2019
SUPERVISOR DIMENSIONS	D.FISCHER	04/2019
SUPERVISOR APPROVAL	L.STIEGLER	04/2019
QA APPROVAL	J.ZIPPER	04/2019

NSLS II
NATIONAL SYNCHROTRON LIGHT SOURCE II

PHOTON DIVISION
SST BEAMLINE
SURVEY & ALIGNMENT, LARIAT I

NEXT ASSY:	PD-SST-BL-1001		
PROJECT:	PBN		
		WBS#	7.02.03

THIRD ANGLE PROJECTION

E — SIZE CODE IDENT NO.
PD-SST-BL-LAY-1070 — DRAWING/PART NUMBER
A — REVISION
ESH&Q RISK LEVEL: A1
SHEET 1 OF 2

C:\Models\dwg\PD-SST-BL-LAY-1070.dwg

RELEASED – EFFECTIVE

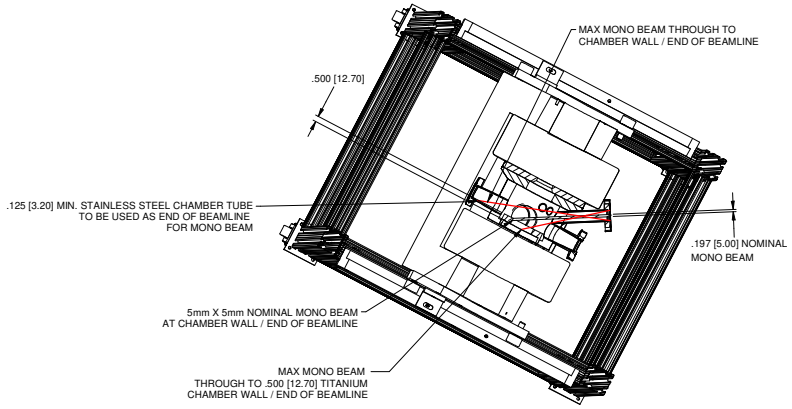

SECTION A-A
(THROUGH MONO BEAM)
SCALE 1 : 4

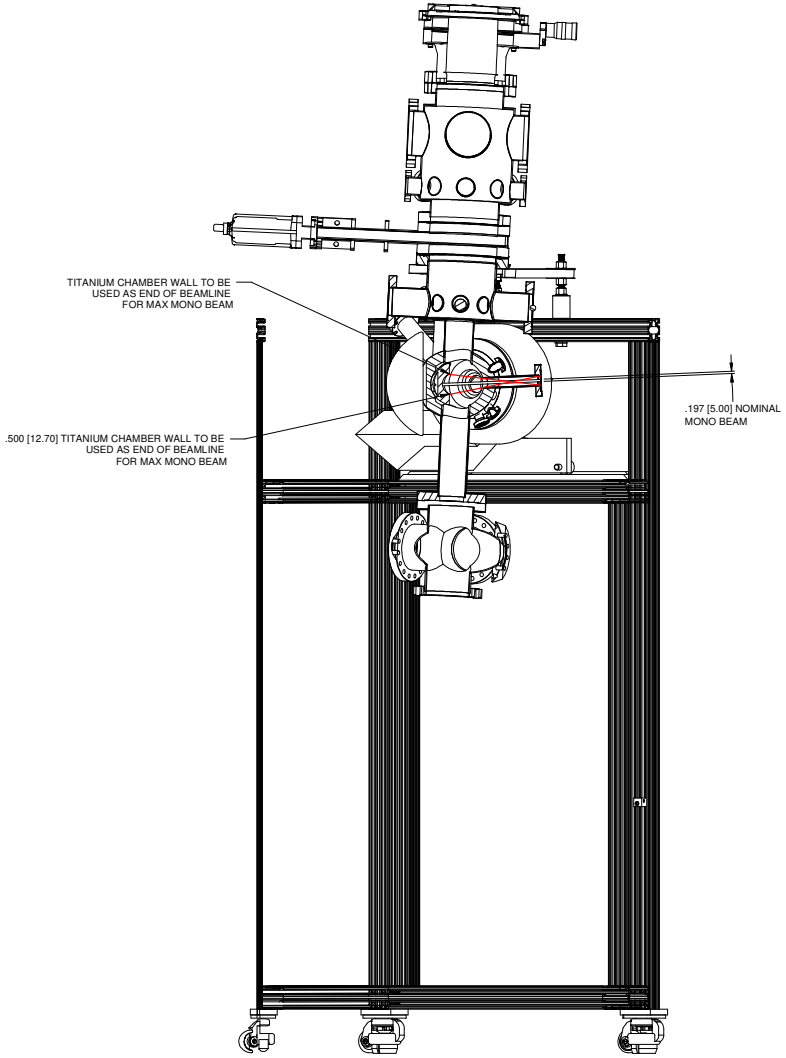

SECTION B-B
(THROUGH MONO BEAM)
SCALE 1 : 4

E	PD-SST-BL-LAY-1070	A
ESH&Q RISK LEVEL A1	SHEET 2 OF 2	

RELEASED – EFFECTIVE