Materials Physics and Processing (MPP) Beamline

Scientific programs:

1) high-throughput, real-time, *in-situ* rapid thermal processing (RTP) studies of structural changes in thin films, film stacks, and nanopatterned samples:

   phase transformations, texture changes, barrier failures, interfacial roughening…

2) x-ray diffraction and scattering techniques (XRD) on solids, including thin films, stacks, nanopatterned samples, and bulk materials; with the capability for mounting small environmental chambers, bending jigs, and Displexes.

MPP Beamline

Capabilities:

- Rapid and reproducible switching between endstations (< ½ hr)
- RTP
  - high flux (>10^{13}ph/s)
  - beam size < 0.1mm
  - automated running (sample changing, gas handling, data collection)
  - static configuration (except detectors and energy)
  - remote access
  - short duty cycle (run mostly at night, several days/week)
  - specialized endstation
- XRD
  - high q resolution (<10^{-4})
  - beamsize < 0.1mm
  - 6-circle diffractometer w/ offset phi for Displexes and small chambers
  - remote access

MPP Beamline

Components:

- 3PW source, collect ~3 mr horizontal, can decrease with slits
- collimating mirror?
- dual-bandpass monochromator
  - multilayers (1% bandpass), primarily for RTP
  - Si(111) (0.01% bandpass), primarily for XRD
- focusing mirrors for RTP and XRD endstations
  - 1:1 for XRD endstation
- 2 hutches
  - RTP endstation in upstream hutch
  - XRD endstation in downstream hutch
- slits, position monitors, intensity monitors, viewing screens

3-pole wiggler

- 1.14T peak field, 20 cm long
- electron beam size and divergence
  - Horizontal: 167 μm; 98 μrad *vs.* NSLS: 260; 261
  - Vertical: 12.3 μm; 0.82 μrad *vs*. NSLS: 62; 13.5
- on-axis power density 260 W/mrad^2
- flux @ 8 keV ~ 2x10^{13} ph/sec/0.1%bw/mrad (*vs*. ~1x10^{13} for NSLS BM)
- brightness @ 8 keV ~ 9x10^{15} ph/sec/0.1%bw/mm^2/mrad^2 (*vs*. ~2x10^{14})
- critical energy = 6.8 keV
- energy range: 0.01 – 25 keV

Three-pole Wigglers

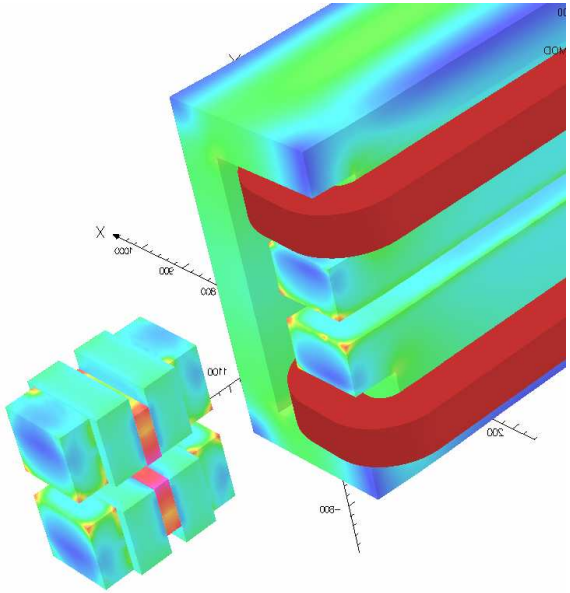

- Added to provide hard x-ray dipole radiation with no significant impact on the emittance
- Up to 30 can be added to the lattice upstream of each dipole B

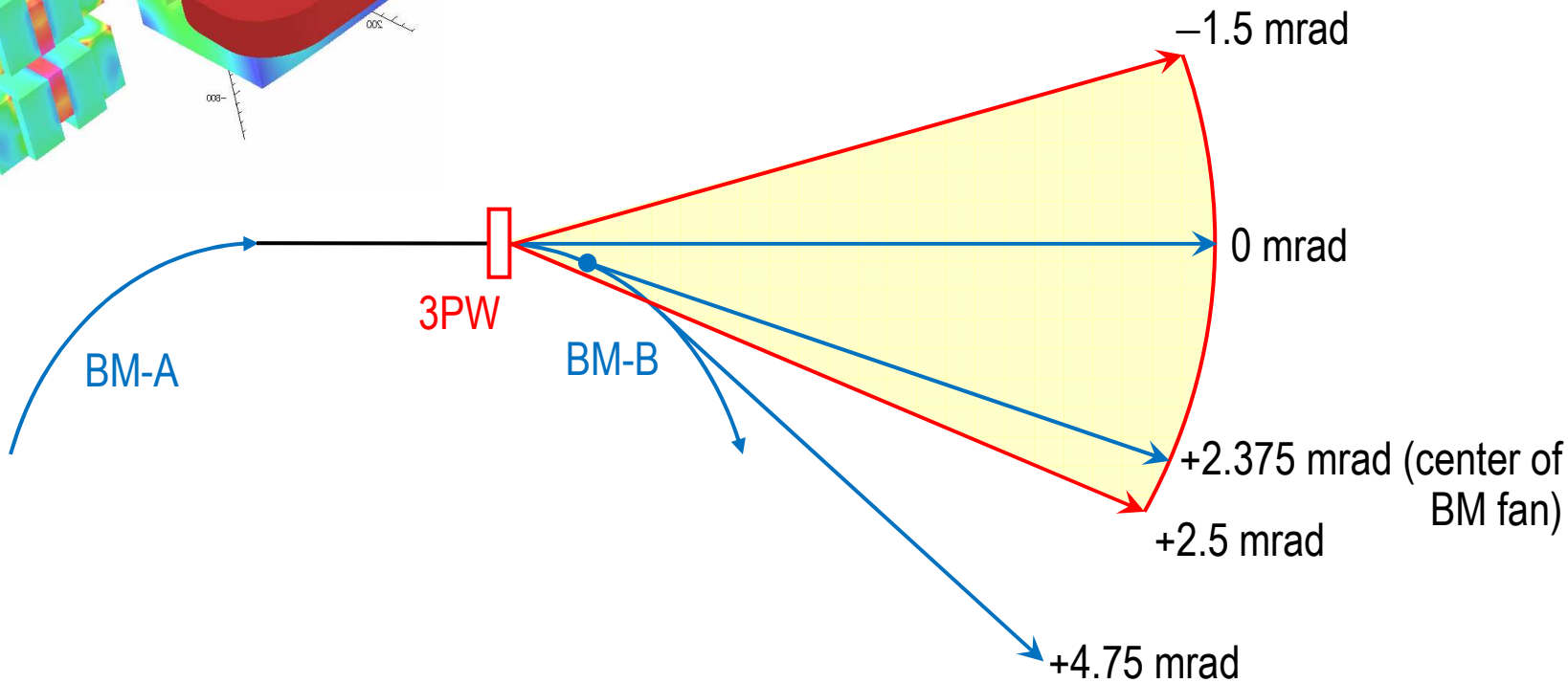

TPW (+ BM) Spectral Flux collected by Finite Aperture (0.33 mrad H x 2 mrad V) at Different Horizontal Angles

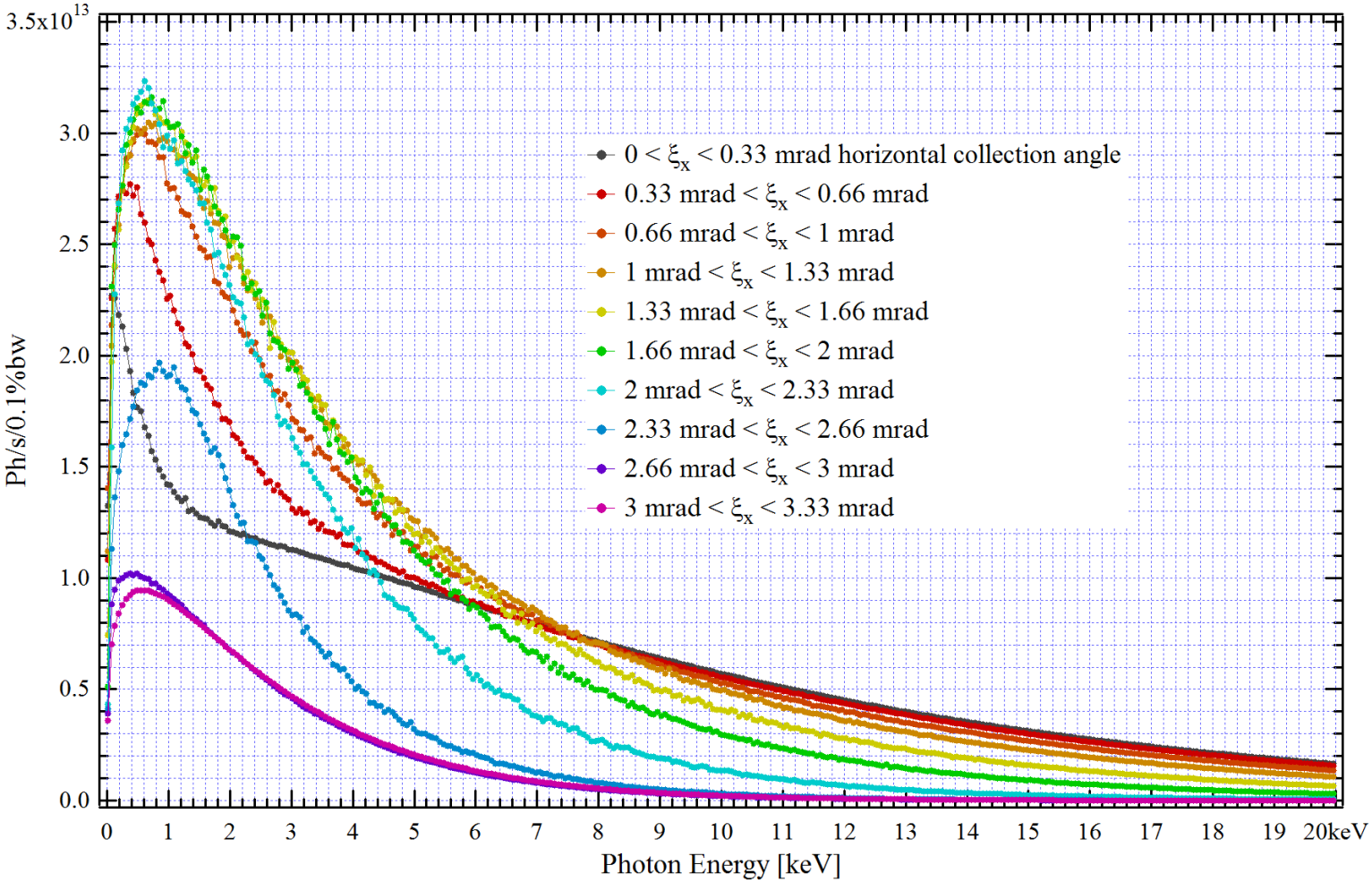

NOTES:

- Horizontal angle ξ_x is calculated from straight section axis “towards the storage ring”; the frame origin is in TPW center
- “Reference” modeling TPW magnetic field was used in the calculations; changes are still possible (!)
- Some numerical noise is present in the calculations

TPW (+ BM) Spectral Flux collected by Finite Aperture (~3 mrad H x 2 mrad V) Centered on the Axis

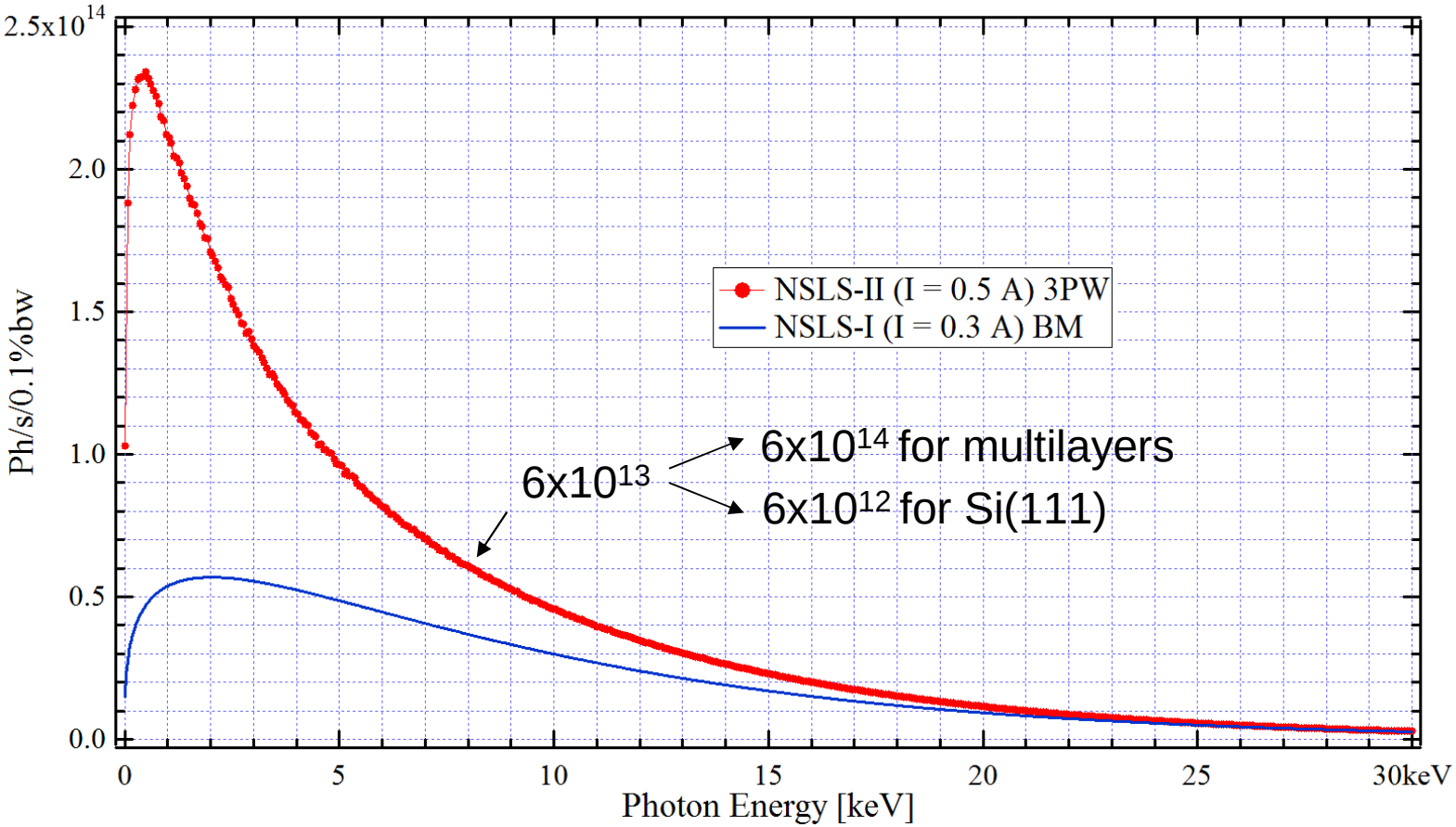

NOTE: “Reference” modeling TPW magnetic field was used in the simulations; changes are still possible (!)

Estimating Focusing Efficiency of TPW Radiation

Test Optical Scheme

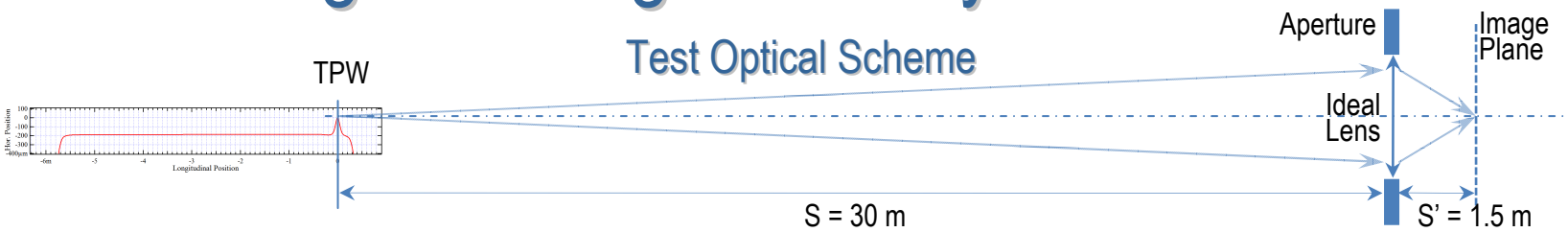

Single-Electron TPW Radiation Intensity Distribution at the Lens (horiz. cut at y = 0), E_{ph} = 3 keV

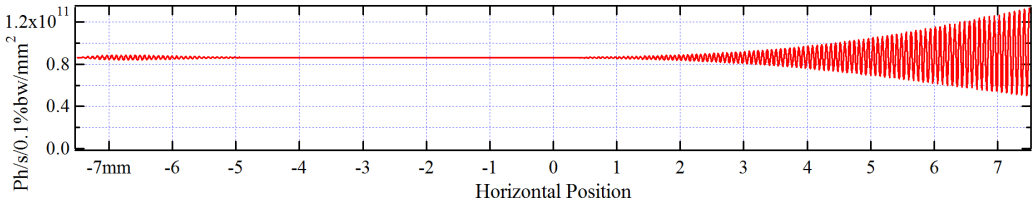

- In X-ray domain, intensity distributions in the image plane are dominated by transverse e-beam size
- At E_{ph} > 3 keV, for horizontal aperture < 0.5 mrad (centered on straight section axis), no important contributions from TPW side poles can be noticed in the image plane

Intensity Distributions in the Image Plane

Aperture: 90 μrad (H) x 90 μrad (V)

"Single-Electron"

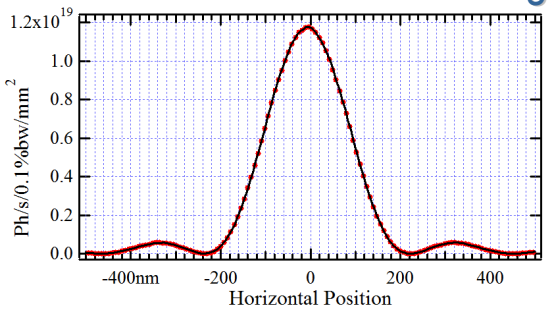

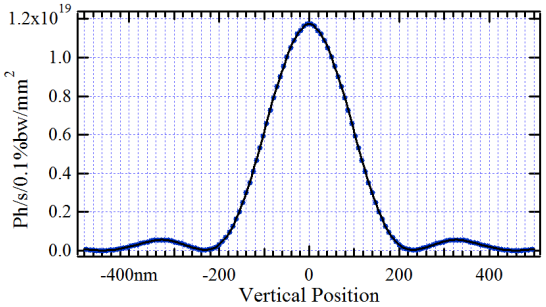

"Multi-Electron"

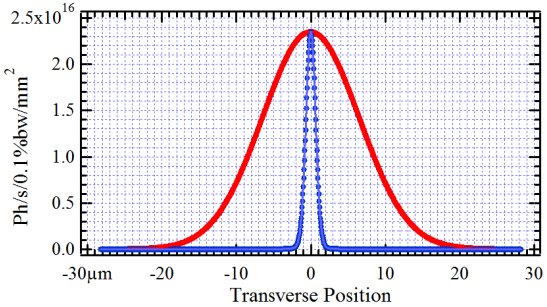

Aperture: 500 μrad (H) x 200 μrad (V)

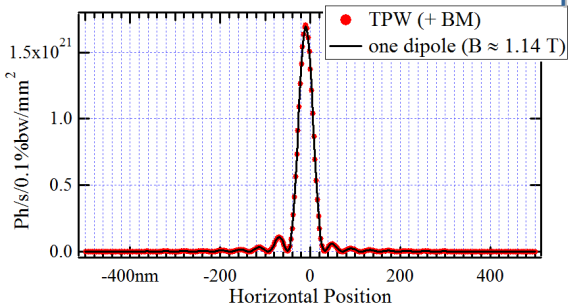

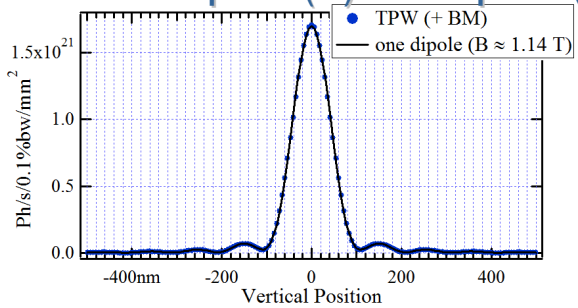

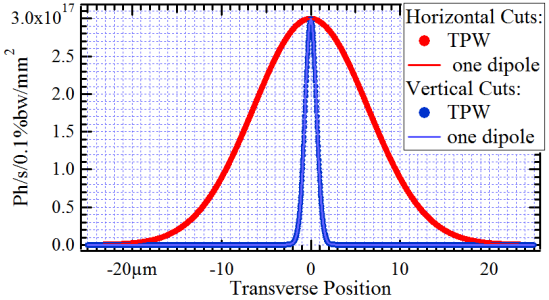

Analyzing TPW and BM Power Density Distributions

Magnetic Field

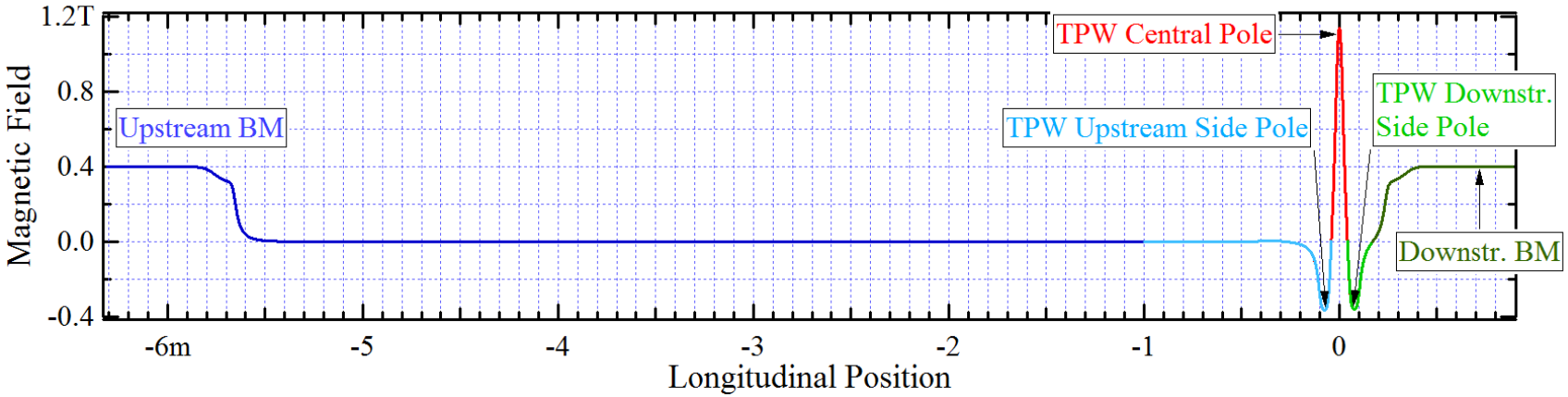

Power Density Distribution from different parts of TPW and BM at 30 m (single-electron emission, integral over all photon energies, horizontal cuts at y = 0)

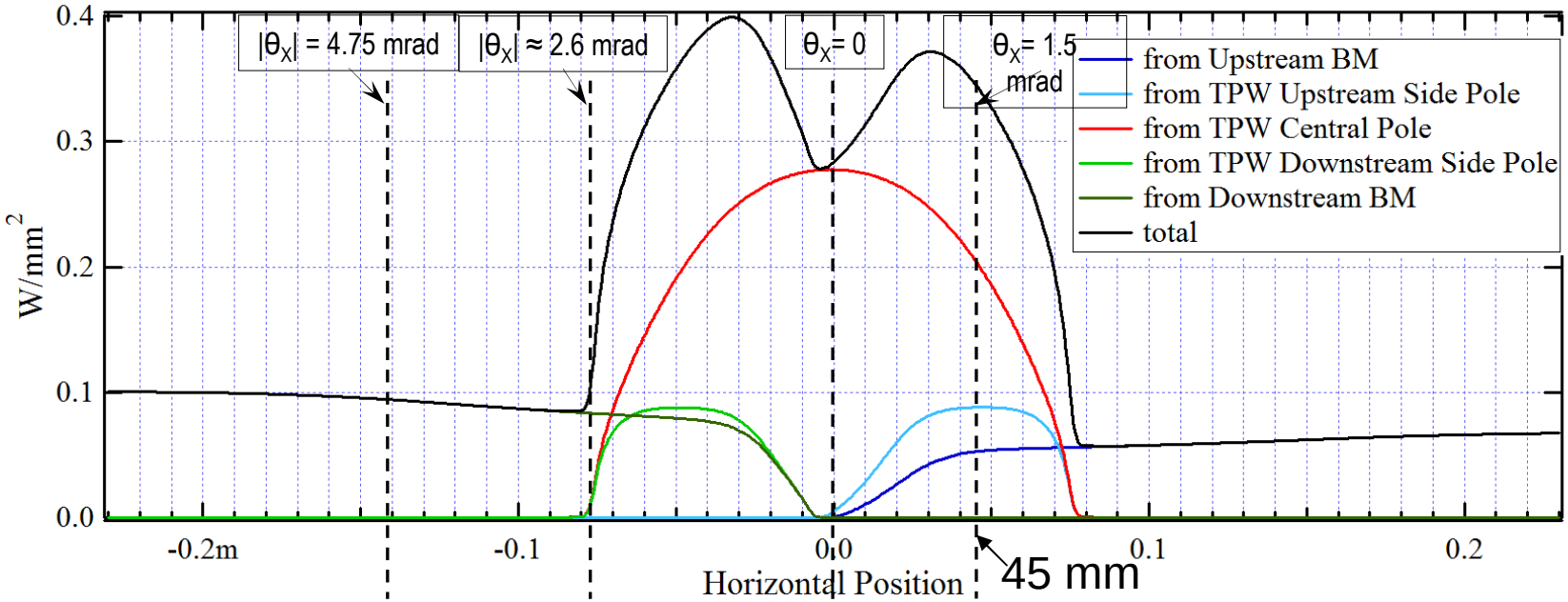

TPW and BM Radiation Intensity Distributions (Hard X-rays)

Intensity Distributions at Different Photon Energies at 30 m from TPW

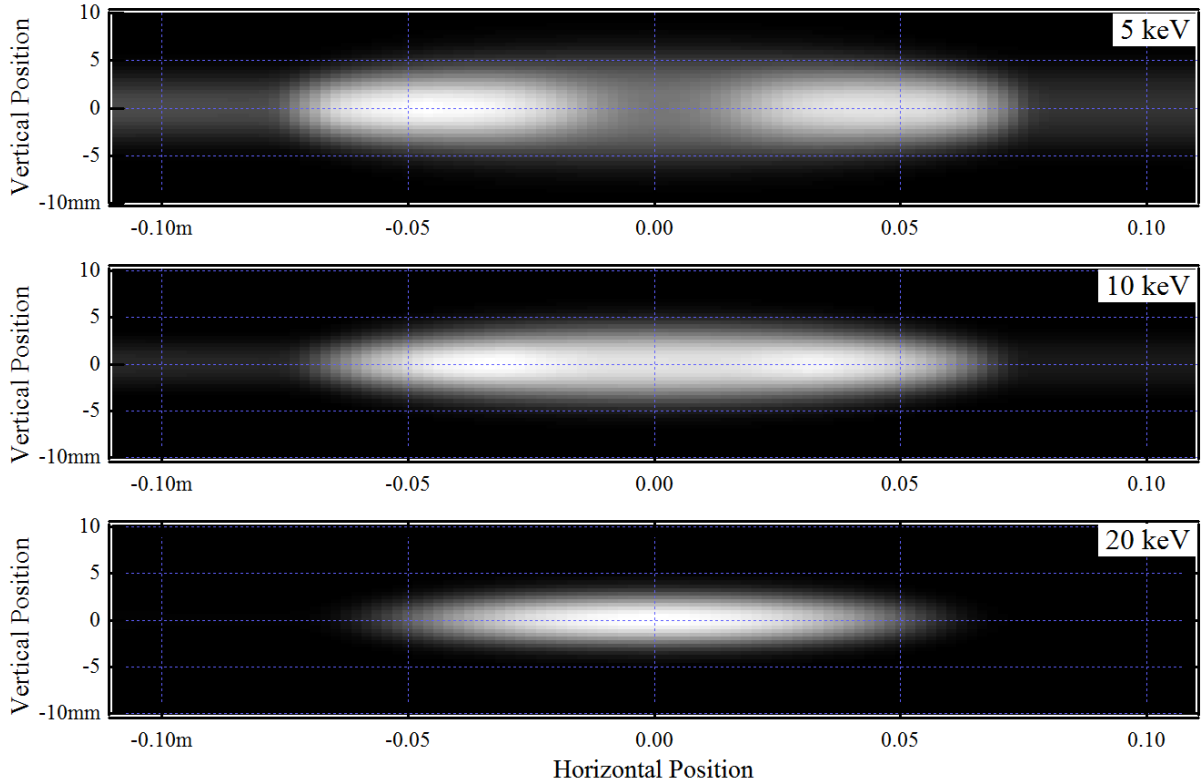

NOTE: modeling TPW magnetic field and BM edge field (without "noses") were used in these simulations; changes are possible (!)

Electron Current: 0.5 A

Horizontal Cuts at y = 0

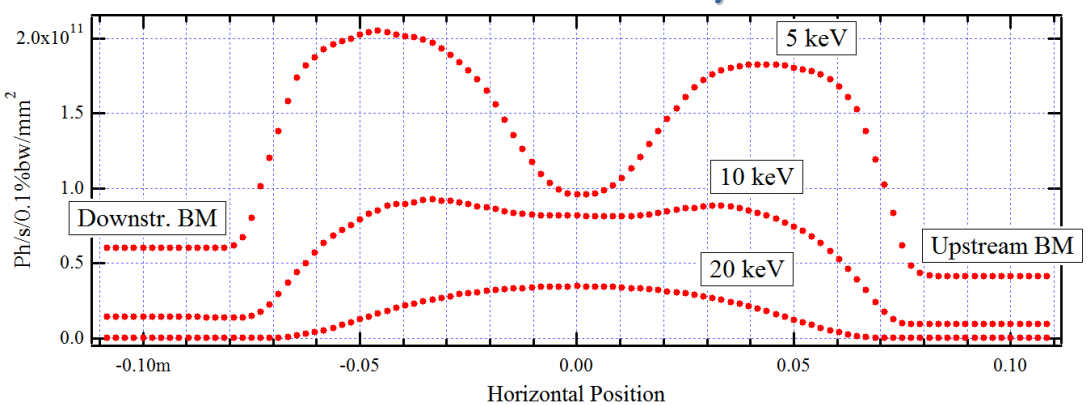

Vertical Cuts at x = 0

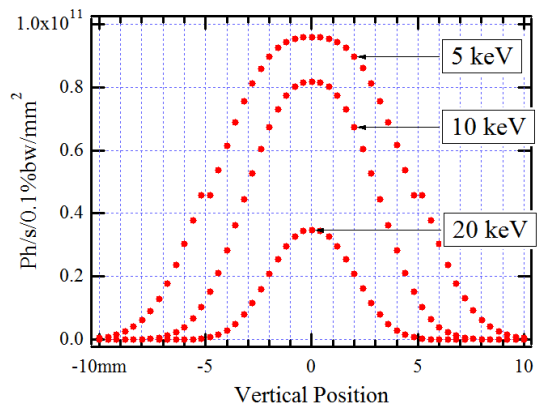

Radiation intensity distribution at 30m, 500mA

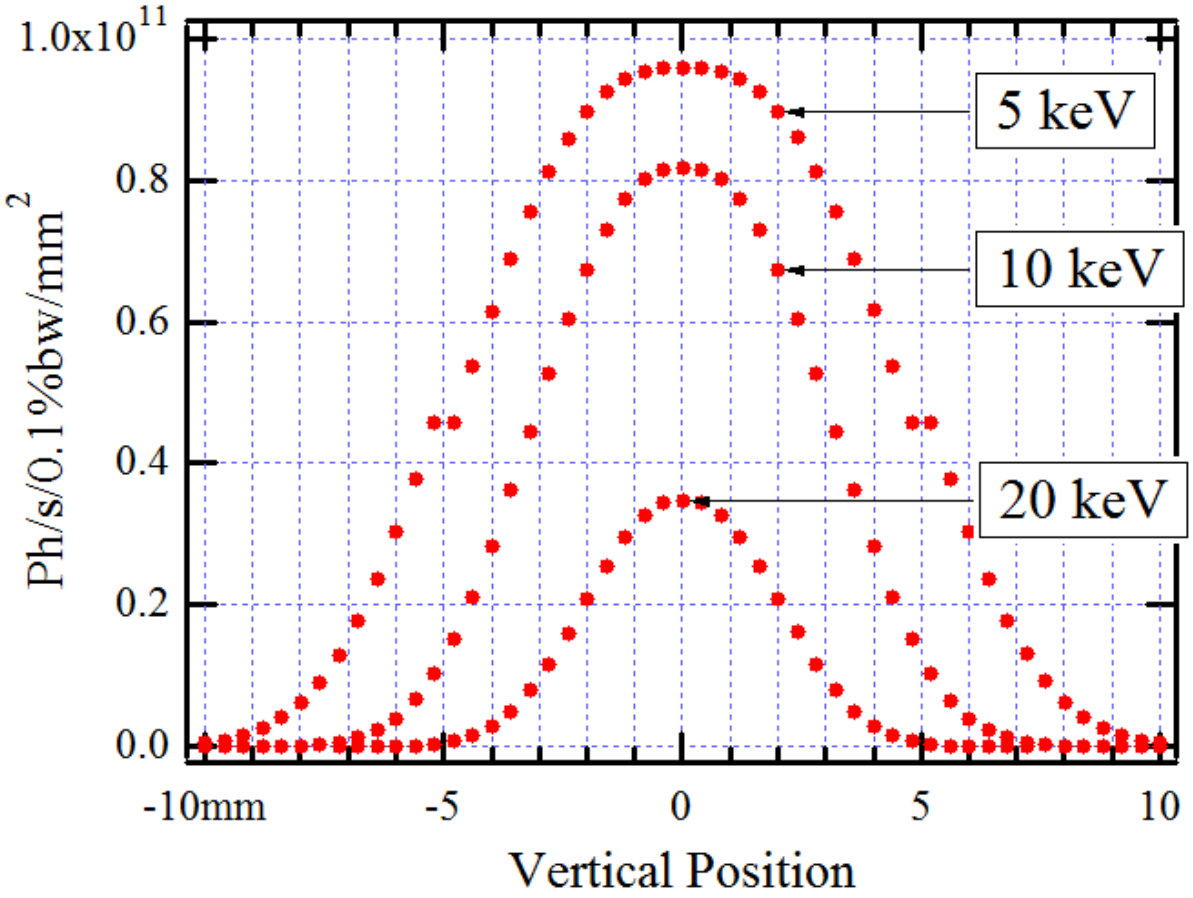

Vertical and horizontal divergence changes with energy
7mm FWHM @30m @ 10keV = 0.0134 deg = 0.23 mrad
Want vert acceptance ~ 0.038 degrees = 0.66 mrad

Monochromator

- double-crystal, fixed exit, water-cooled first element
- Si(111) energy range ? – 12 keV, bandpass ~10^{-4}
- multilayer energy range 4 – 12 keV, bandpass ~10^{-2}
- quick change between elements
  - horizontal translation
- acceptance:
  - 3 mrad hor, downward adjustable with upstream slit assembly
  - 0.66 mrad vert (or smaller if upstream collimating mirror)
- accurate return to energy and beam position when going from ML back to Si(111)
- possible sagittal focusing? challenge for ML: need 0.5m bend radius for 2 degree incident angle. Rigaku checking feasibility, required thickness

Mirrors

- collimating toroid upstream of monochromator?
  - upstream of ratchet wall? would decrease required size of downstream optics. Will get info from NIST
- focusing toroid for each endstation
  - 1:1 position for XRD endstation
  - RTP mirror 4-5 m downstream
  - beam size on sample ~sub-mm
  - quick change (vertical translation in and out of beam)
- acceptance: 3 mr, or smaller with upstream slit assembly

Other components in beam path

- scan-able beam position monitors at two positions between collimating mirror and mono or mono and focusing mirrors (to verify collimation)
- video beam observation screens upstream of mono and focusing mirrors
- ion chambers or other flux measurement devices

Endstation #1- RTP

Time-resolved XRD for phase transformations and texture evolution in thin films and nanostructures

Three in-situ probes in real time: resistivity, XRD and light scattering
Robotic sample changing, automated pumpdown and purge with purified gases
Rapid thermal annealing up to 1100ºC
Table vertical drop to allow beam pass-over

fast linear detector for phase transformations	MMPAD area detector for fast texture evolution
640 pixels, 80mm long	512x256 pixels,
10^7 max cps	10^8 dynamic range,
30 msec readout	20-500 fps (1.5 msec readout)

Matlab script analysis:
- **integrated or peak-fitted regions vs temperature or time,**
- **derivatives for transition temps,**
- **Avrami analysis,**
- **conversion of pole figures to ODF?**

tie-in to PDF files for phase ID?

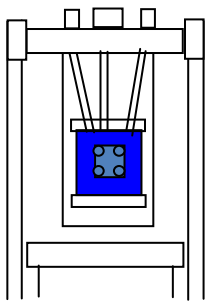

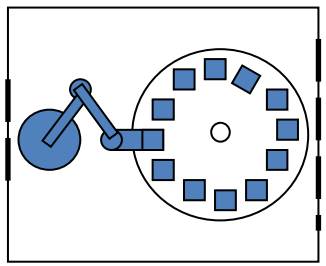

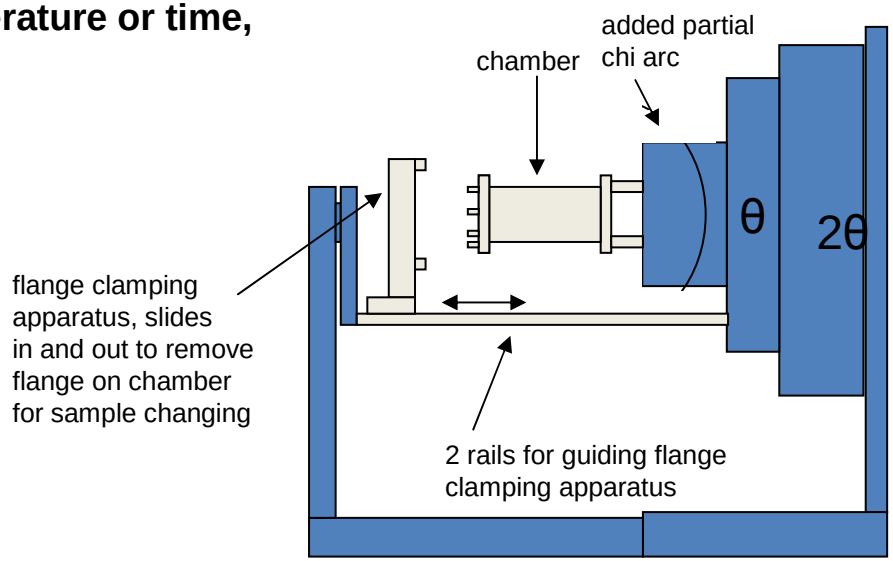

Sample-changing SCARA robot

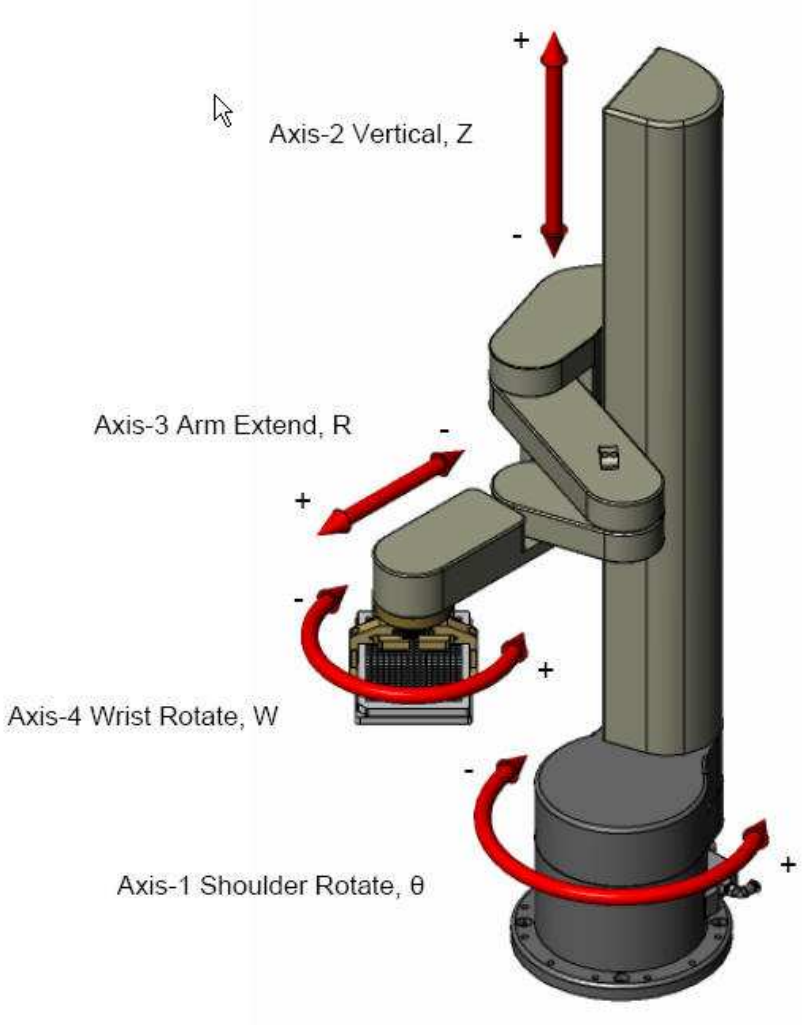

Endstation #2- XRD

Diffraction, scattering, resonant scattering, pole figures

- 6-circle diffractometer
- accommodation for small chambers, Displexes, x-y-z stages, bending jigs, electrical rigs
- analyzer-detector circles for high-resolution

fast linear detector 640 pixels, 80mm long 10^7 max cps/pixel 30 msec readout	MMPAD area detector 512x256 pixels, 10^8 dynamic range, 20-500 fps (1.5 msec readout)	APD point detector 10mm dia. area 10^7 dynamic range

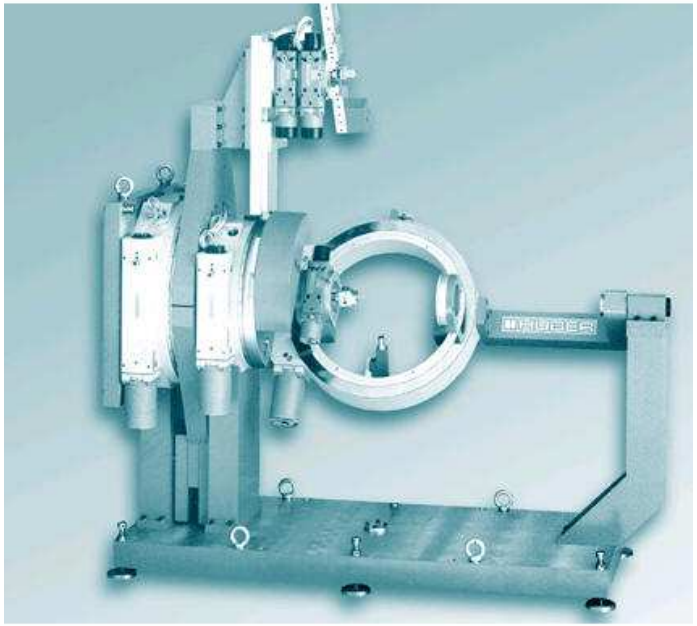

MX 3-pole-wiggler layout
(~1 mr hor acceptance)

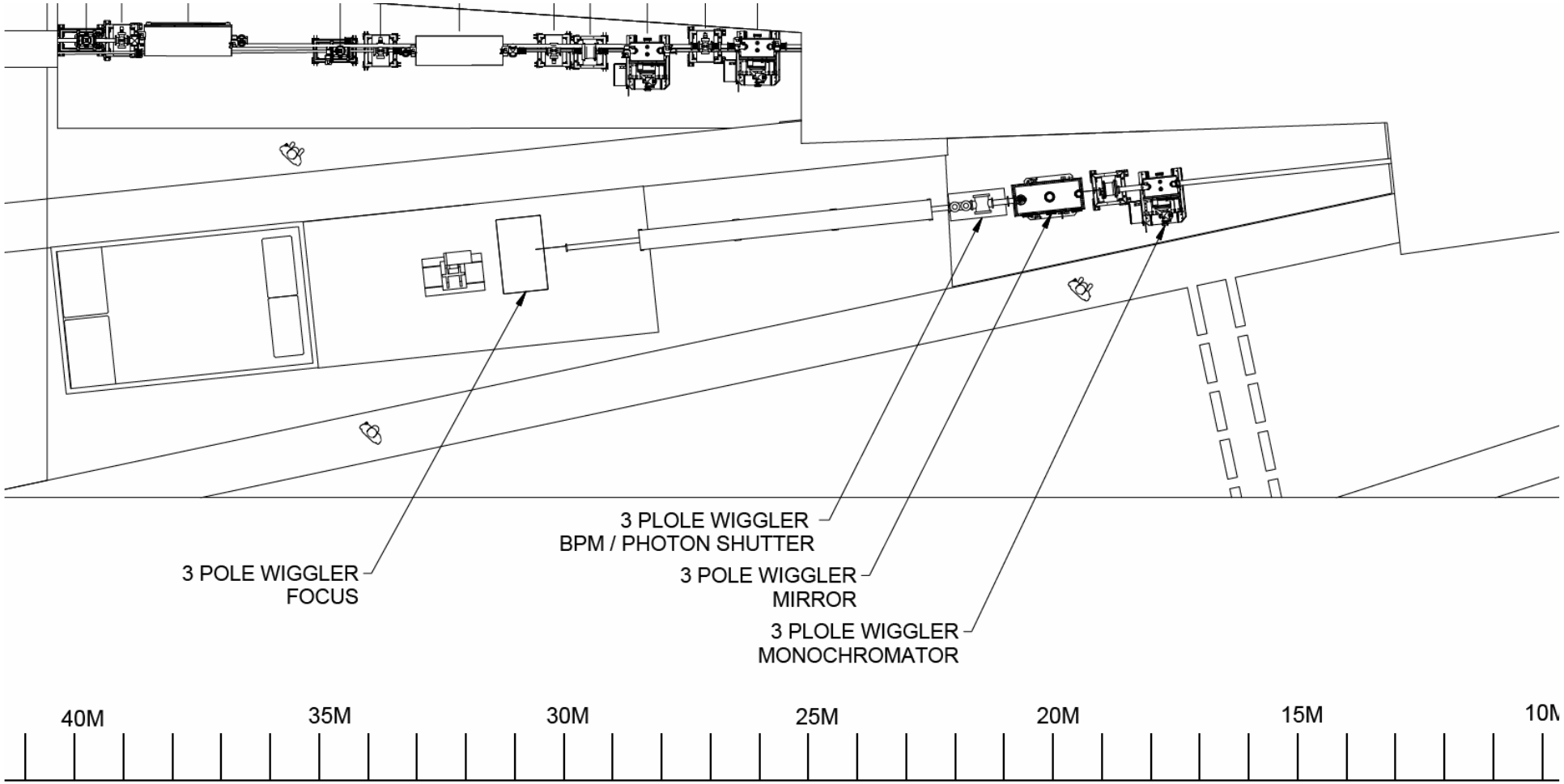

beam ht = 1397 mm

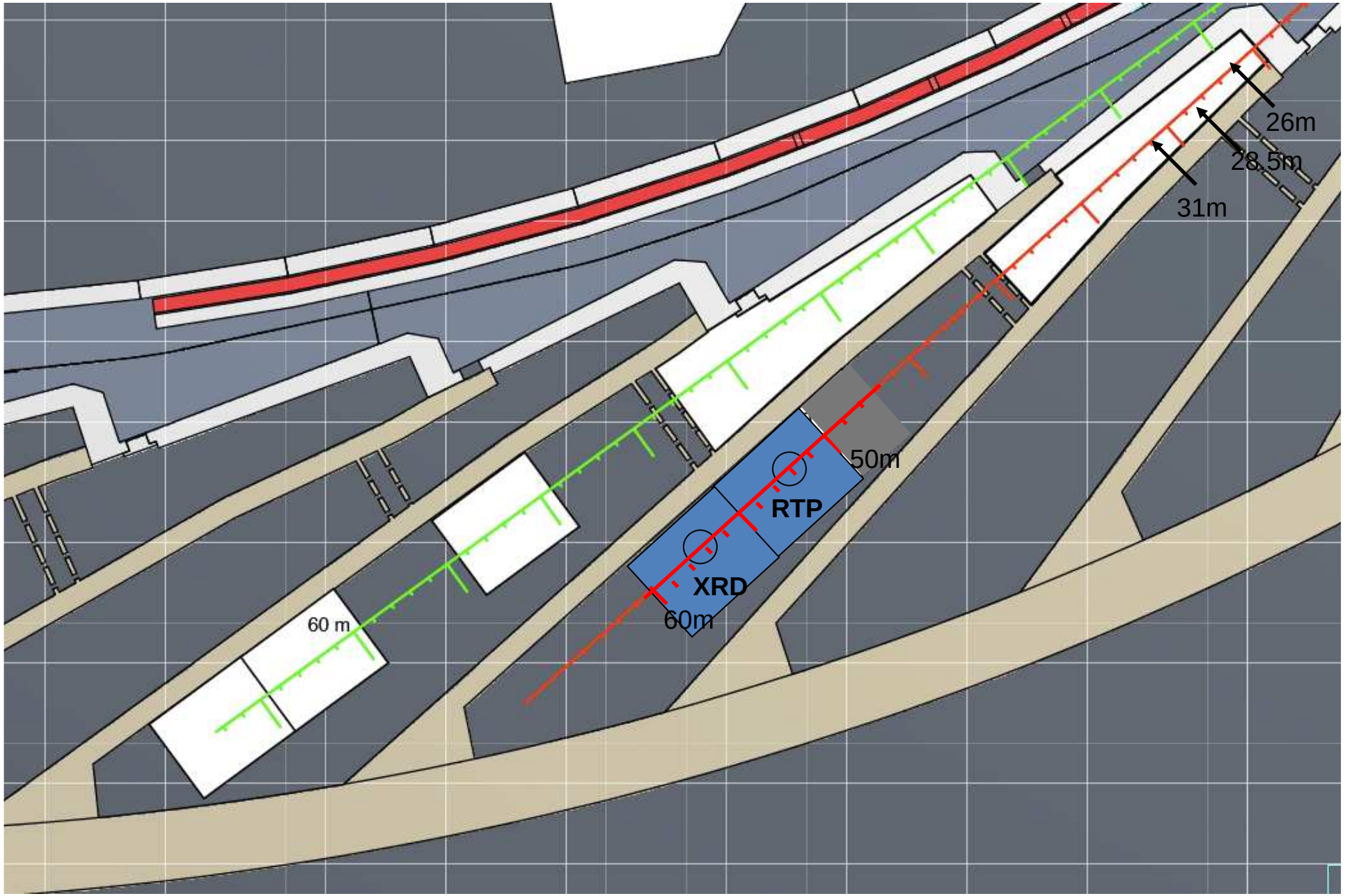

Proposed Layout

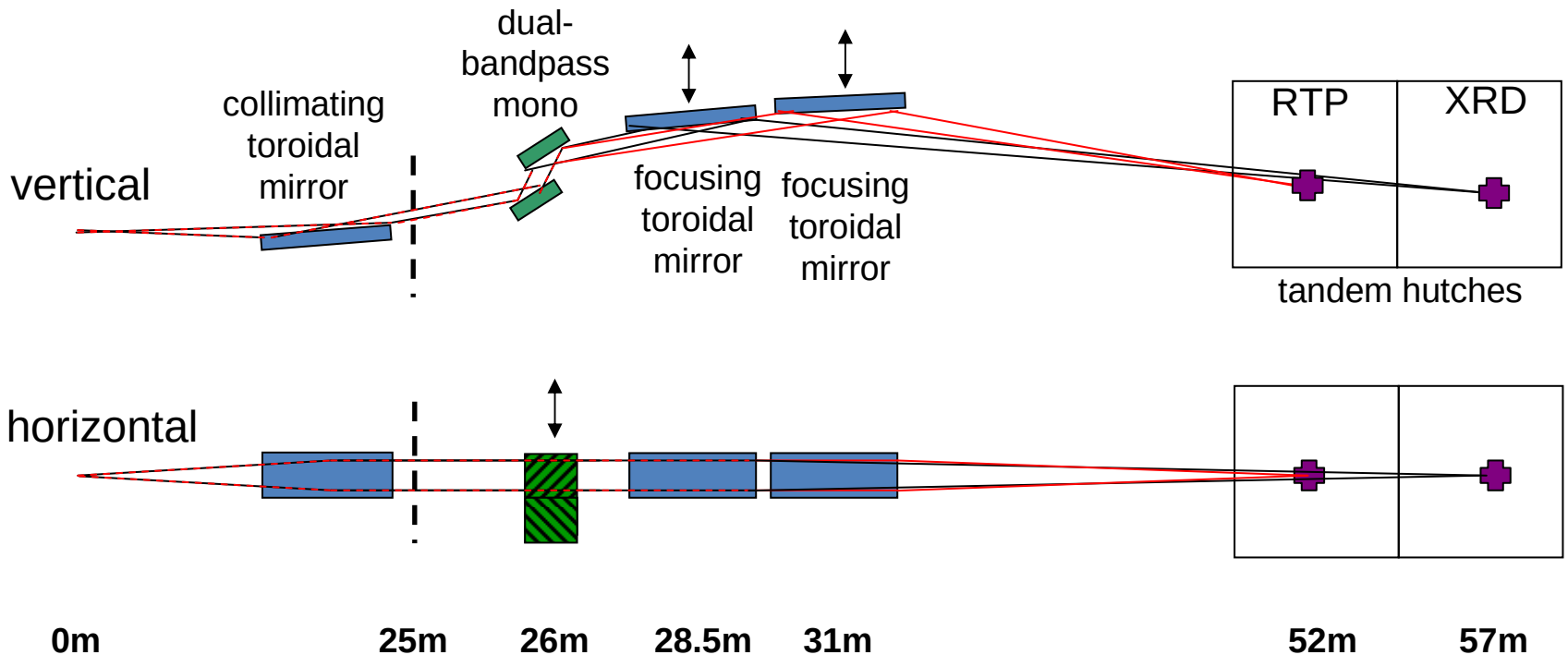

Very important that switching is fast (<30 min.) and reproducible (accurate)