Development of Synthetic-Diamond-Based Front End XBPM at the Advanced Photon Source

Deming Shu

Advanced Photon Source

Argonne National Laboratory

February 26, 2009

NSLS-II Mini-Workshop on X-ray Beam Monitors

OUTLINE

- ***Introduction***
- ***Photoemission Diamond-Based XBPM at the APS Beamline Front End***
  - *XBPM for APS Bending Magnet Beamline Front-End*
  - *XBPM for APS Undulator/ Wiggler Beamline Front-End V.1.2*
  - *XBPM for APS Undulator-Only Beamline Front-End V.1.5*
- ***Study of the APS Smart XBPM System***
- ***APS Collaborations for CLS and NSRRC TPS Front End XBPM***
- ***Photoemission Diamond-Based X-ray Beam Profiler***
- ***Photoconductive Diamond-Based XBPM R & D at the APS***
- ***Discussions***

Introduction to the type of the XBPM

- ***Operation principle***
  - *Fluorescence screen*
  - *Thermal screen*
  - *Scanning wire or blade*
  - *Thin film fluorescence signal detection*
  - *Position sensitive ion chamber*
  - *Position sensitive photoconductive detector*
  - *Position sensitive photoemission detector*
  - *and more …*
- ***Destructive or non destructive to the x-ray beam***
- ***Location at the beamline***
  - ***In the front end --- white beam with high-heat-load***
  - ***In the beamline --- "pink beam" or monochromatic beam with limited heat-load***

Early experiment for APS CVD-diamond-based XBPM development was started at CHESS and NSLS in 1991

Thanks for the help!

Nuclear Instruments and Methods in Physics Research A319 (1992) 56–62
North-Holland

NUCLEAR INSTRUMENTS & METHODS IN PHYSICS RESEARCH
Section A

The APS X-ray undulator photon beam position monitor and tests at CHESS and NSLS

D. Shu, B. Rodricks, J. Barraza, T. Sanchez and T.M. Kuzay
Advanced Photon Source, Argonne National Laboratory, Argonne, IL 60439, USA

The advent of third generation synchrotron radiation sources, like the Advanced Photon Source (APS), will provide significant increases in brilliance over existing synchrotron sources. The APS X-ray undulators will increase the brilliance in the 3–40 keV range by several orders of magnitude. Thus, the design of the photon beam position monitor is a challenging engineering task. The beam position monitors must withstand the high thermal load, be able to achieve submicron spatial resolution while maintaining their stability, and be compatible with both undulators and wigglers. A preliminary APS prototype photon beam position monitor consisting of a CVD-diamond-based, tungsten-coated blade was tested on the APS/CHESS undulator at the Cornell High Energy Synchrotron Radiation Source (CHESS) and on the NSLS X-13 undulator beamline. Results from these tests, as well as the design of this prototype APS photon beam position monitor, will be discussed in this paper.

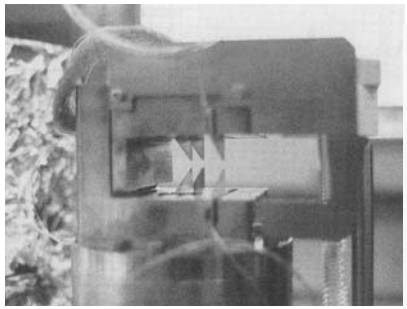

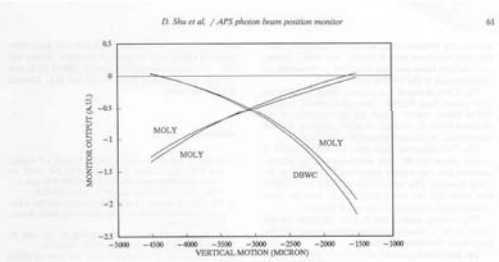

Fig. 9. Total photoelectron yield output test for APS diamond and molybdenum blades using APS/CHESS X-ray undulator at CHESS.

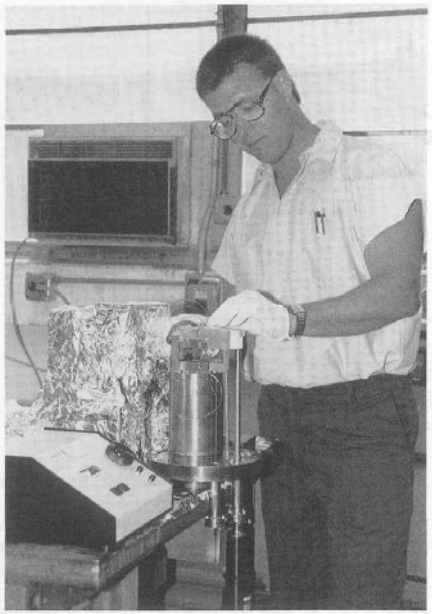

Fig. 5. Monitor assembly with water cooling base and vertical blade gap control mechanism for APS diamond blade test at CHESS.

provided submicron position resolution similar in performance to the matched molybdenum blade (fig. 7).

6. CVD-diamond blade tests at CHESS

The APS/CHESS X-ray undulator is a 2 m, 123 pole, 3.3 cm period Nd–Fe–B hybrid insertion device. The undulator produced the expected brightness at 5.437 GeV with the fundamental X-ray energy ranging from 4.3 to 7.9 keV corresponding to a change in gap from 1.5 to 2.8 cm [7]. The test monitor was installed on the undulator beamline front end at a distance of 8.3 m from the source. The monitor was supported on a CHESS optical table. An optical encoder, which attached to the CHESS optical table, provided 0.1 μm motion sensitivity. Fig. 8 shows the block diagram for the monitor control and data acquisition setup. The sensitivity in beam position by the PBPM is ascertained as follows. The monitor itself is mounted on a stepping motor driven optical table. When the monitor is moved, the computer recodes the photoelectron-emmission signal from the blades with simultaneous backup information from an optical encoder of the optical table motion. This is done at a relatively fast data acquisition speed of 400 points/s and therefore precise, re-affirmed information is obtained on the relative position of the beam.

For most of the tests, the undulator magnet gap setting was 1.5 cm. The monitor dynamic range and sensitivity were tested for a variety of vertical blade gaps. The test results show that the photoemission

Introduction to the APS front end XBPM

The Advanced Photon Source (APS) at Argonne National Laboratory is a national user facility for synchrotron radiation research.

Introduction

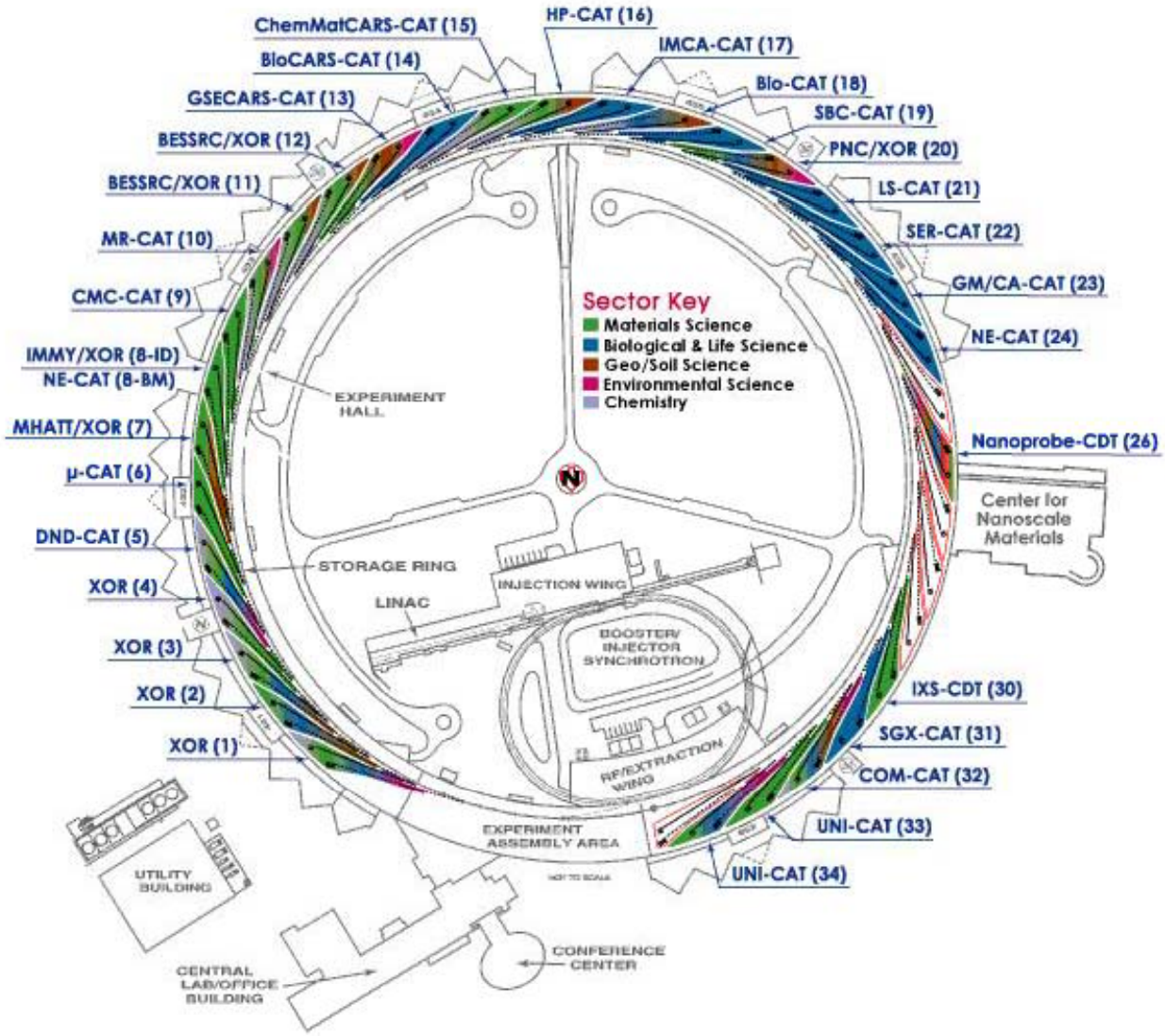

Introduction

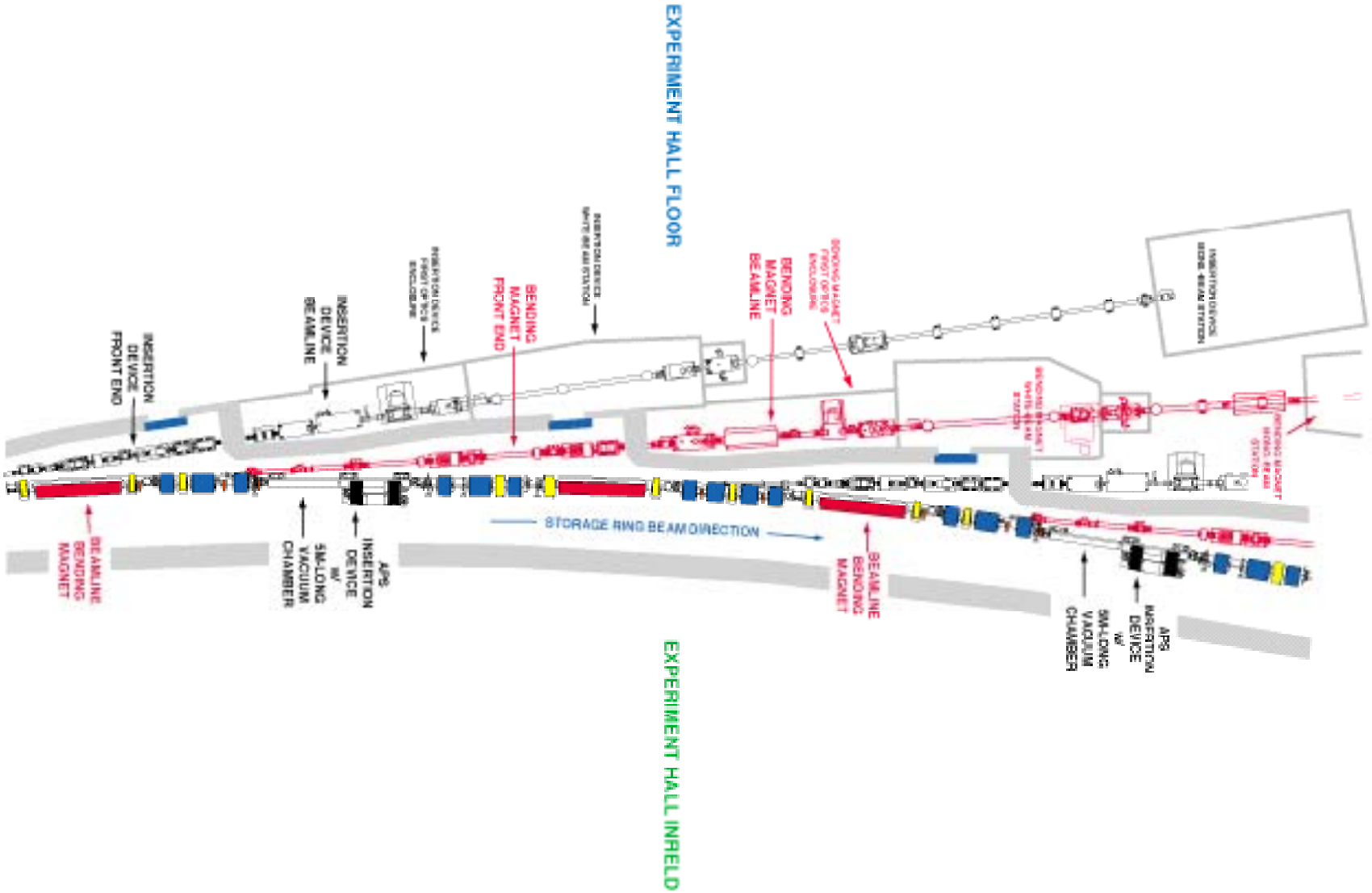

Beam Position Monitors and Magnets in One Sector

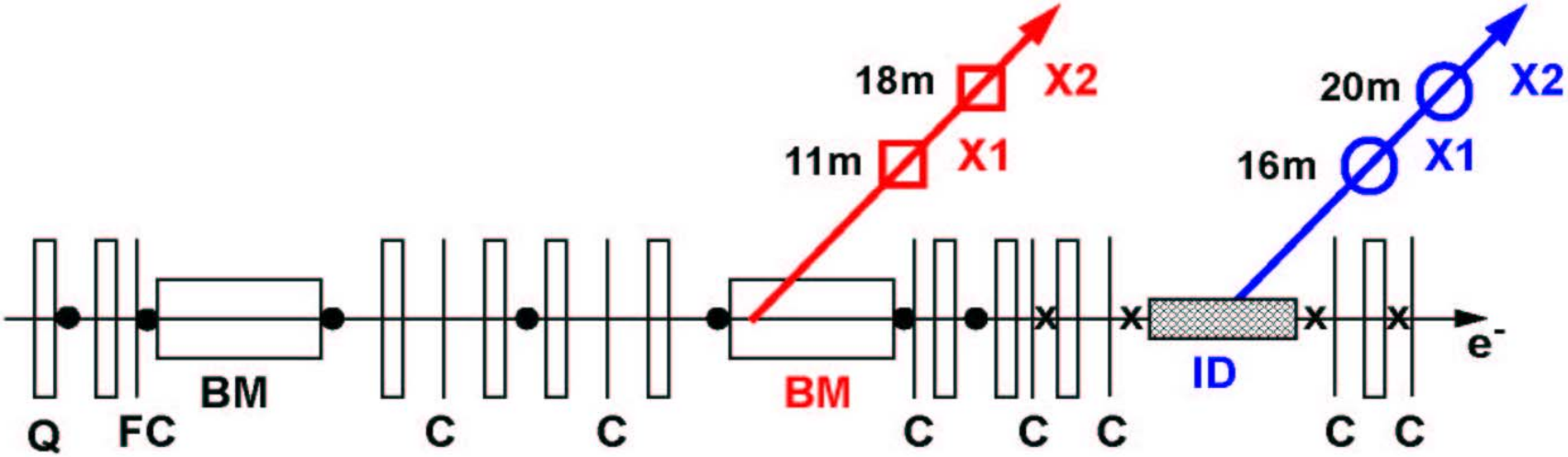

- ● : Broad-band RF Beam Position Monitors (7) (Turn-by-Turn)
- x : Narrow-band RF Beam Position Monitors (4) (~ 300 Hz)
- □ : BM X-ray Beam Position Monitors (2 - Vertical Only) (~165 Hz)
- ○ : ID X-ray Beam Position Monitors (2) (~165 Hz)
- FC : "Fast" Corrector Magnet (1) (~ 1000 Hz)
- C : "Slow" Corrector Magnets (7) (few Hz)
- Q : Quadrupole Magnets

Courtesy of: G. Decker (APS/Users Operations Monthly Meeting, Feb. 10, 2006)

Bending Magnet and BPM Arrangement

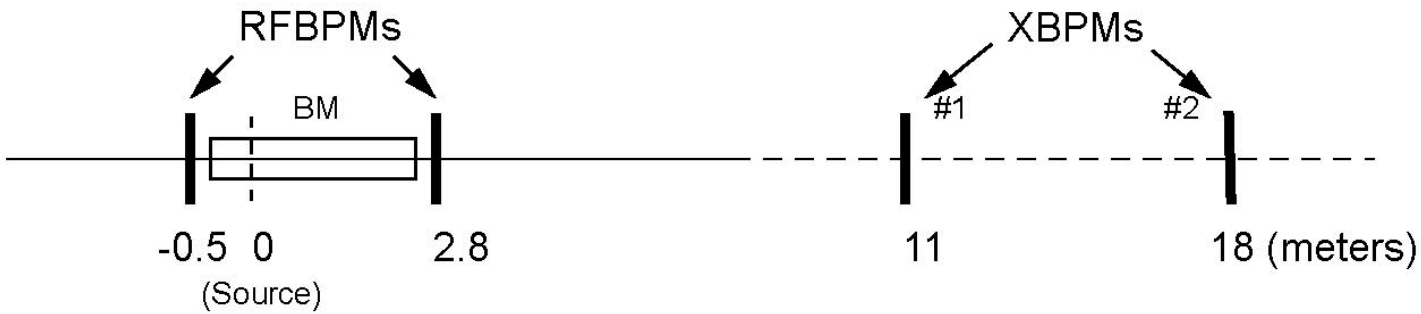

Insertion Device and BPM Layout

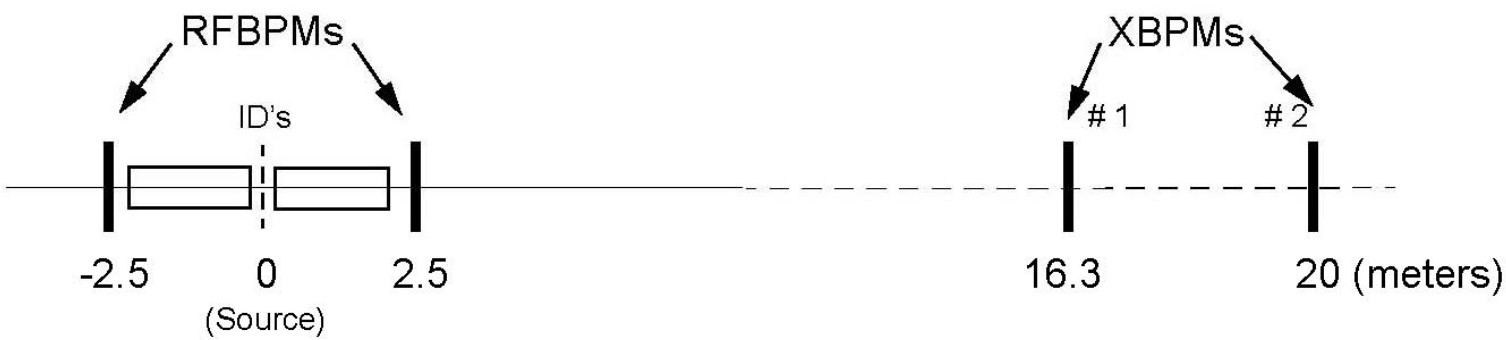

Courtesy of: G. Decker (APS/Users Operations Monthly Meeting, Feb. 10, 2006)

Front End Design for Bending Magnet Sources

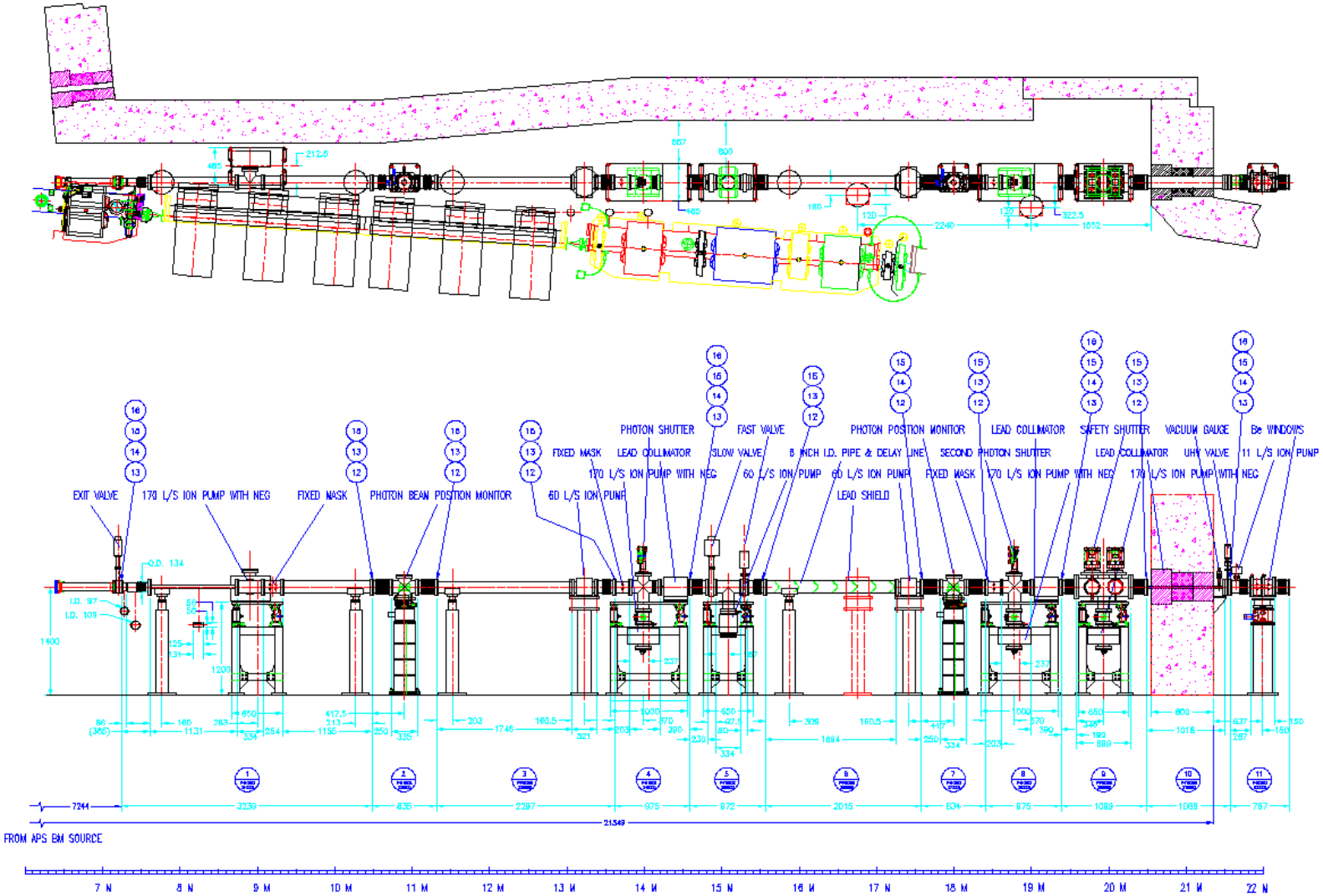

Front End Design for Undulator/ Wiggler Sources V. 1.2

Undulator Configuration: ID 1, 2, 3, 5, 6, 7, 8, 9, 10, 12, 13, 15, 17, 18, 19, 20, 33, 34

Wiggler Configuration: ID 11, 14

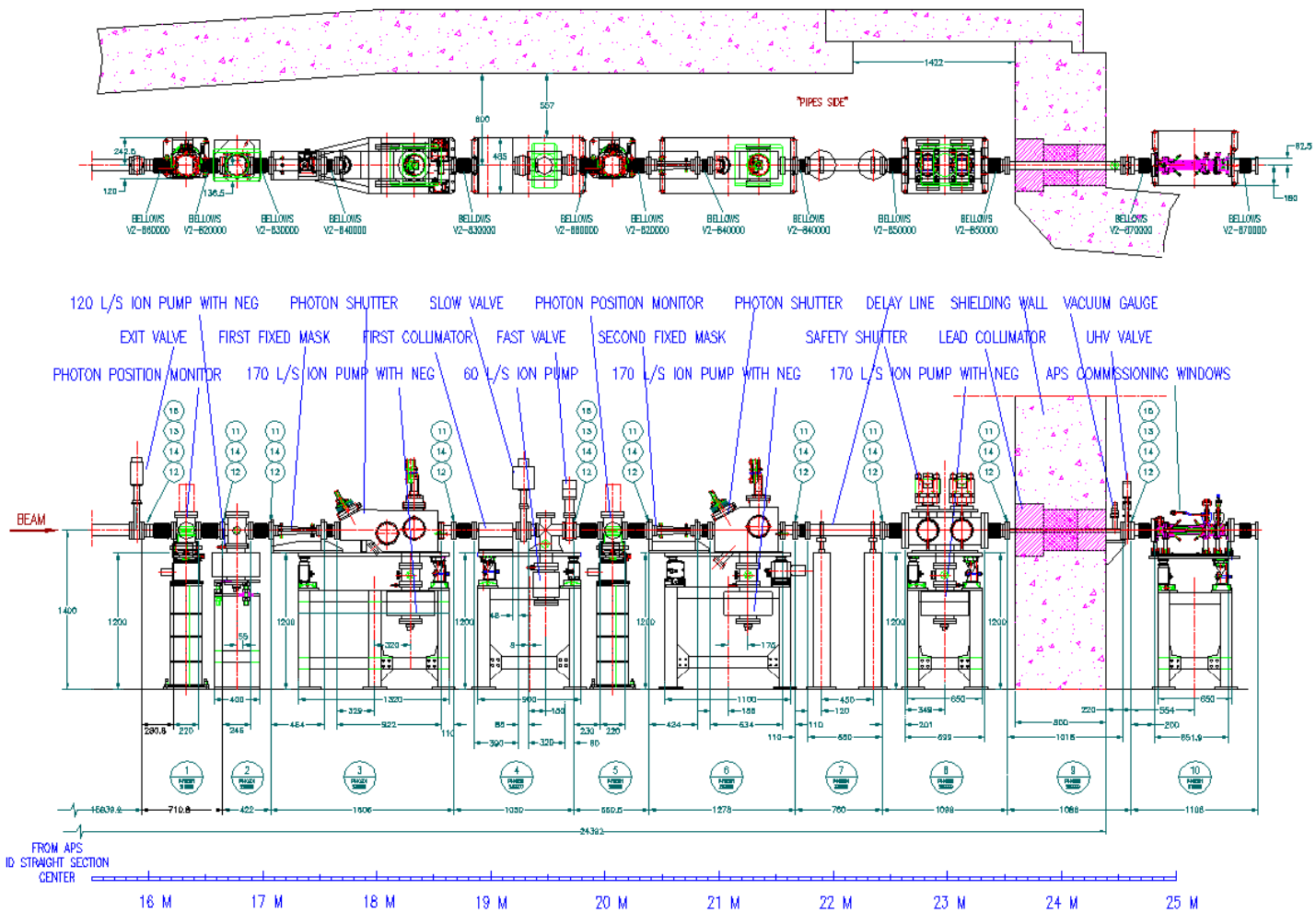

APS Undulator-Only Front End V1.5 (32-ID, 31-ID, 16-ID, 22-ID)

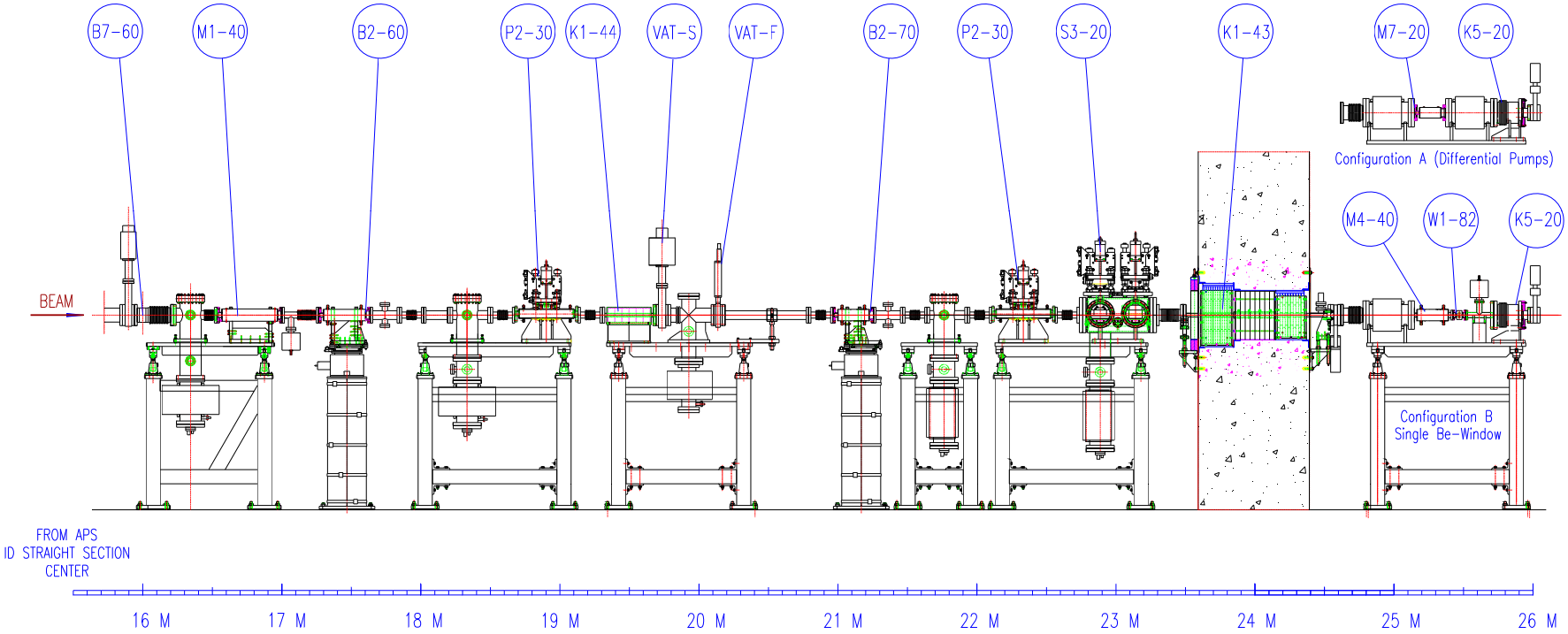

XBPM for Bending Magnet Beamline Front-End

T2-70 BM FE XBPM Support Assembly [Consists of: T2-81, T2-82(T2-23), T2-84]

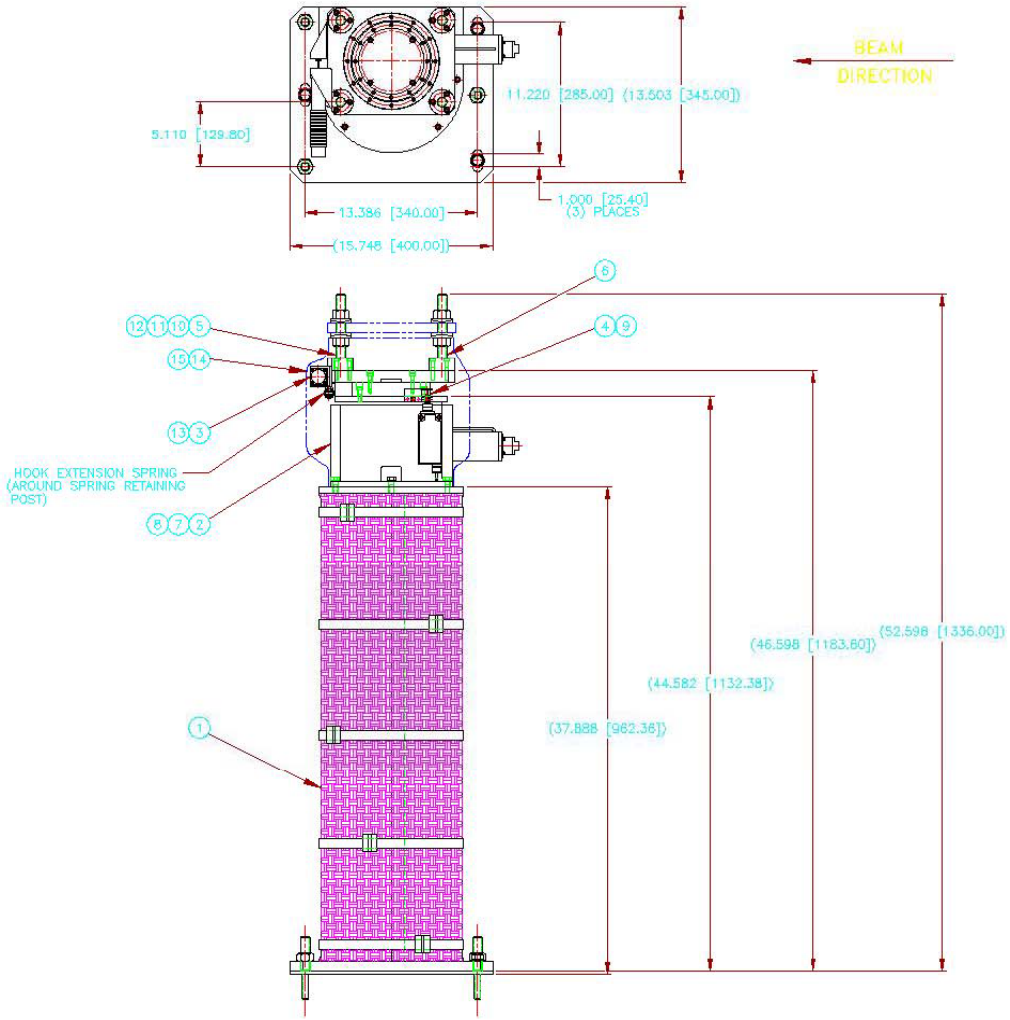

XBPM for Bending Magnet Beamline Front-End

B3-20 BM FE 1st XBPM Vacuum Assembly

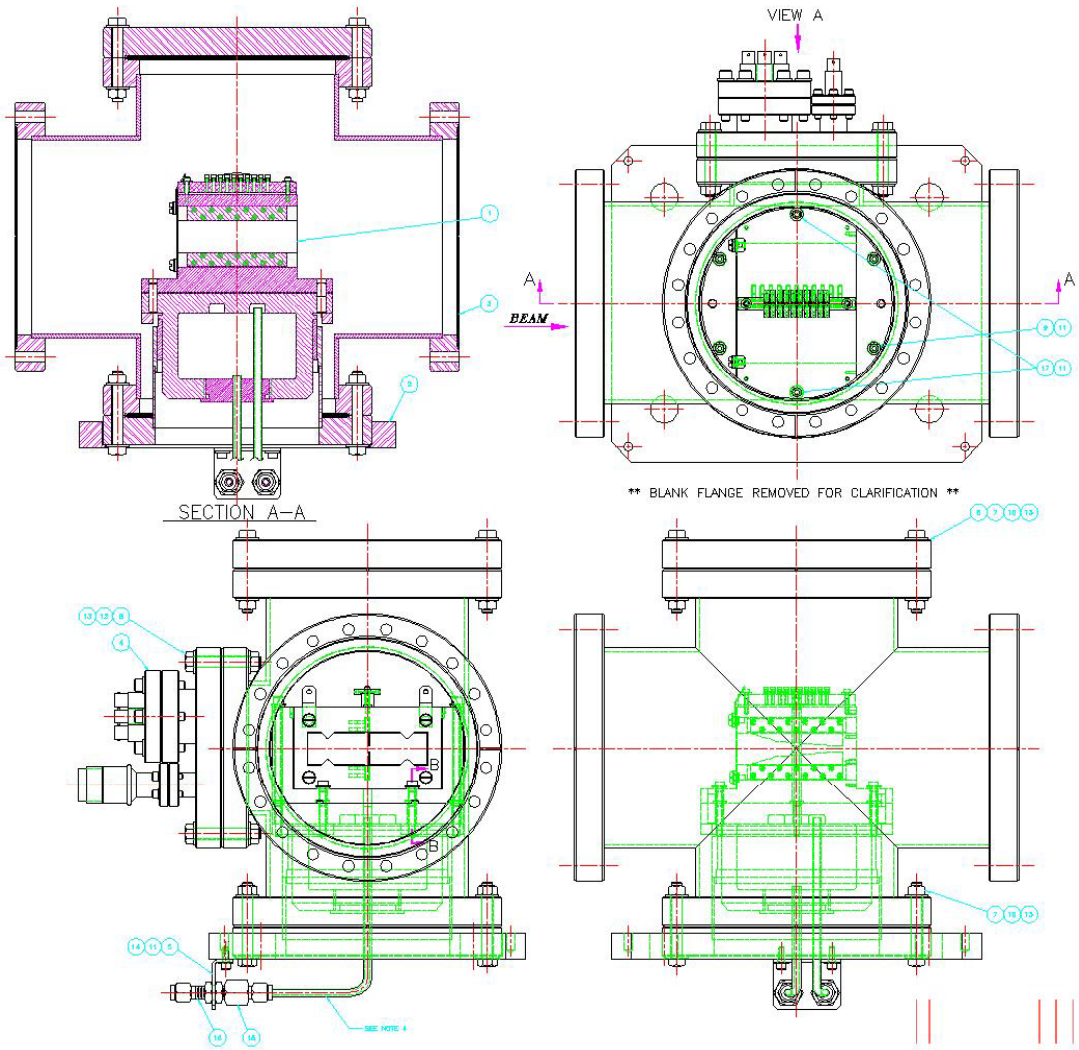

XBPM for Bending Magnet Beamline Front-End

B3-30 BM FE 2nd XBPM Vacuum Assembly

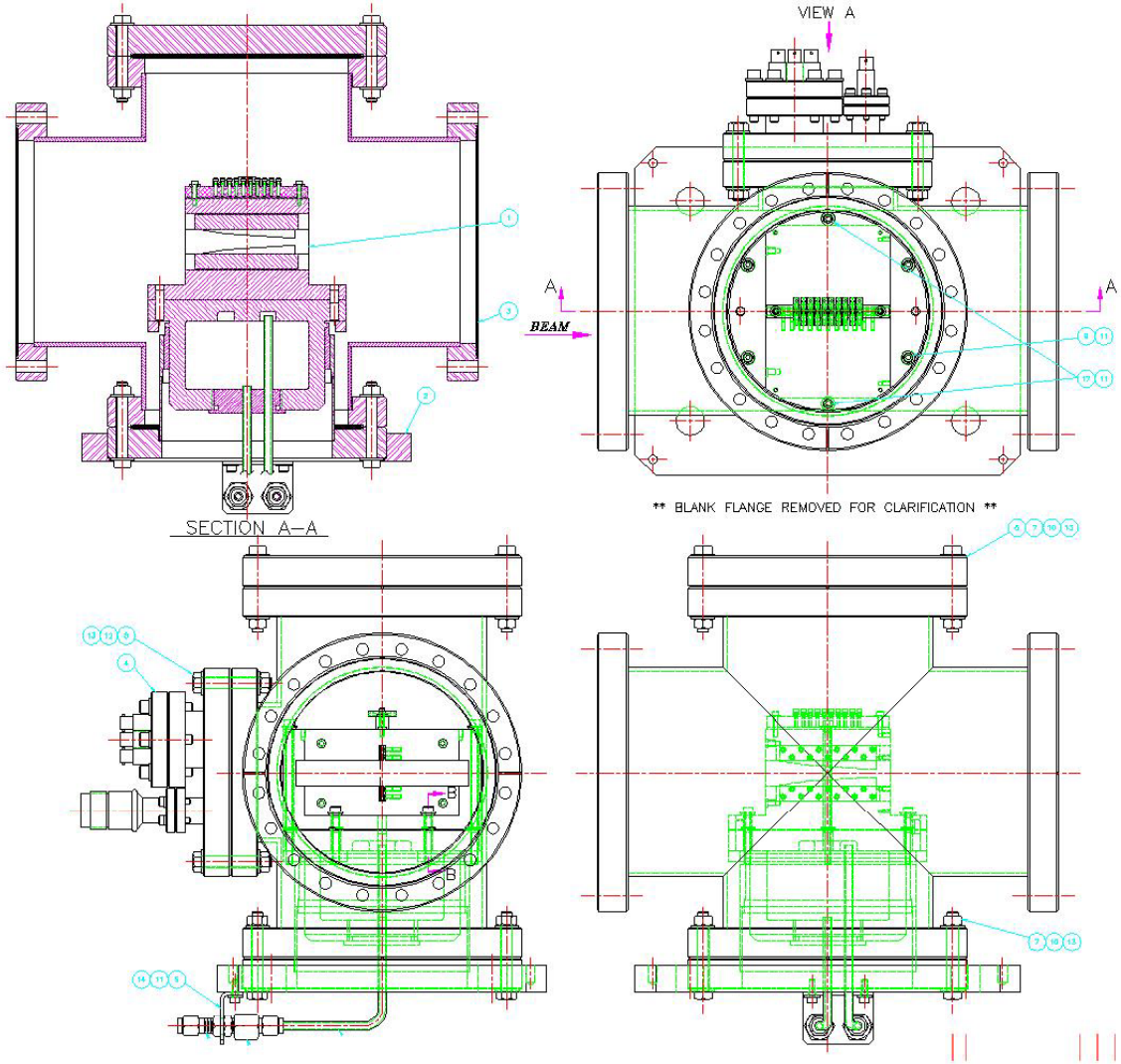

XBPM for Bending Magnet Beamline Front-End

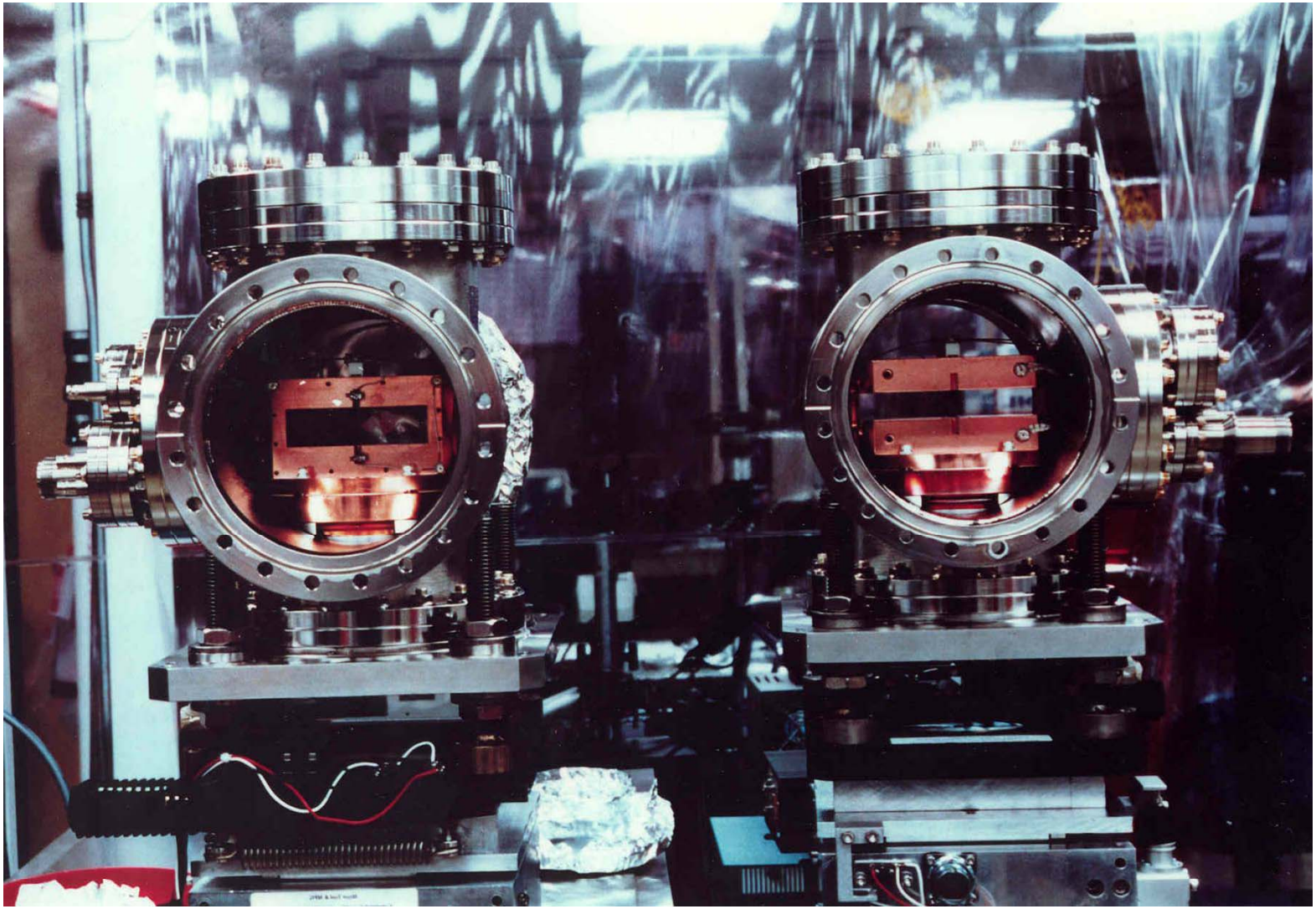

XBPM for Bending Magnet Beamline Front-End

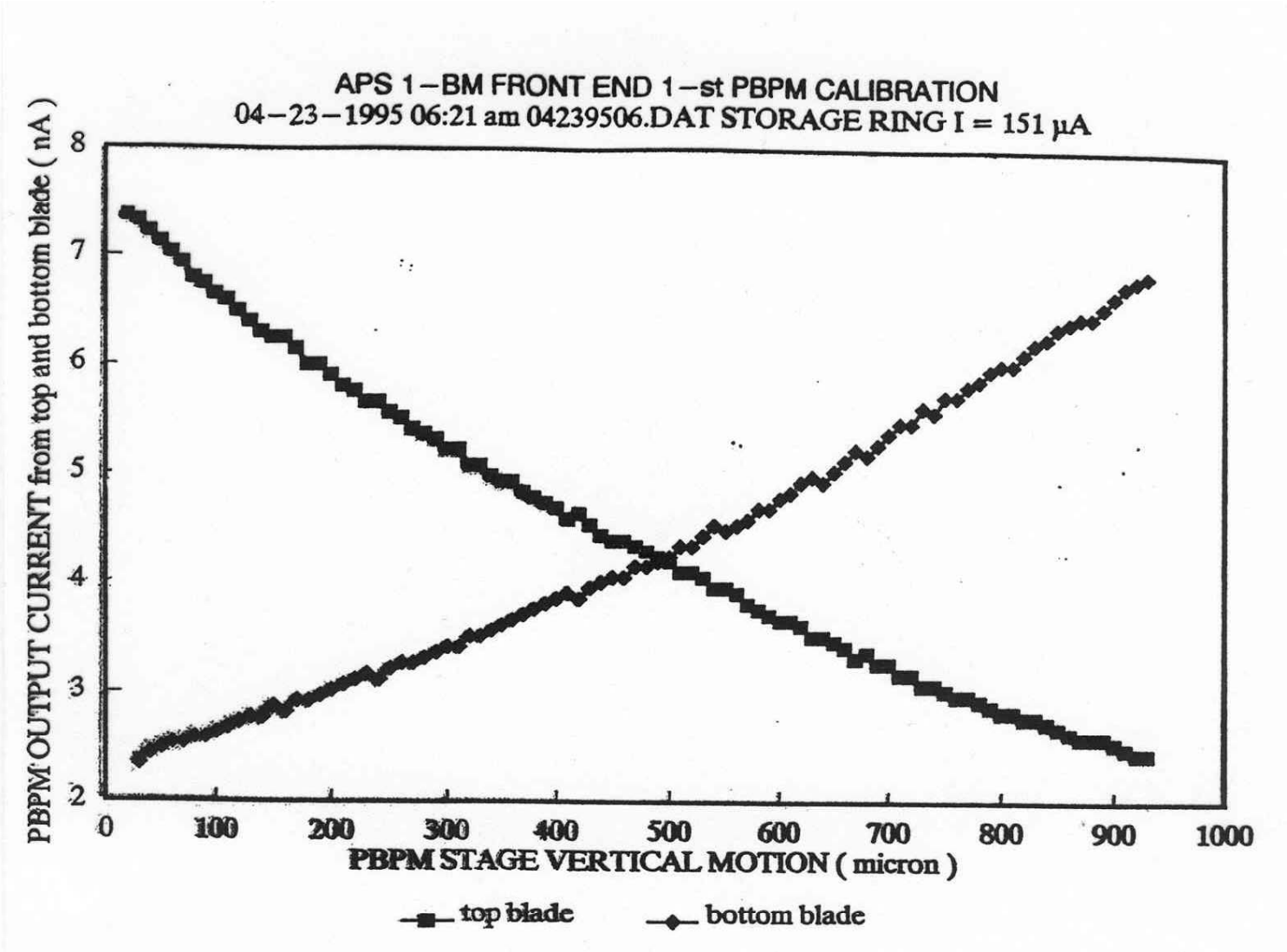

XBPM for Bending Magnet Beamline Front-End

B3-21 BM FE 1st XBPM Monitor Assembly

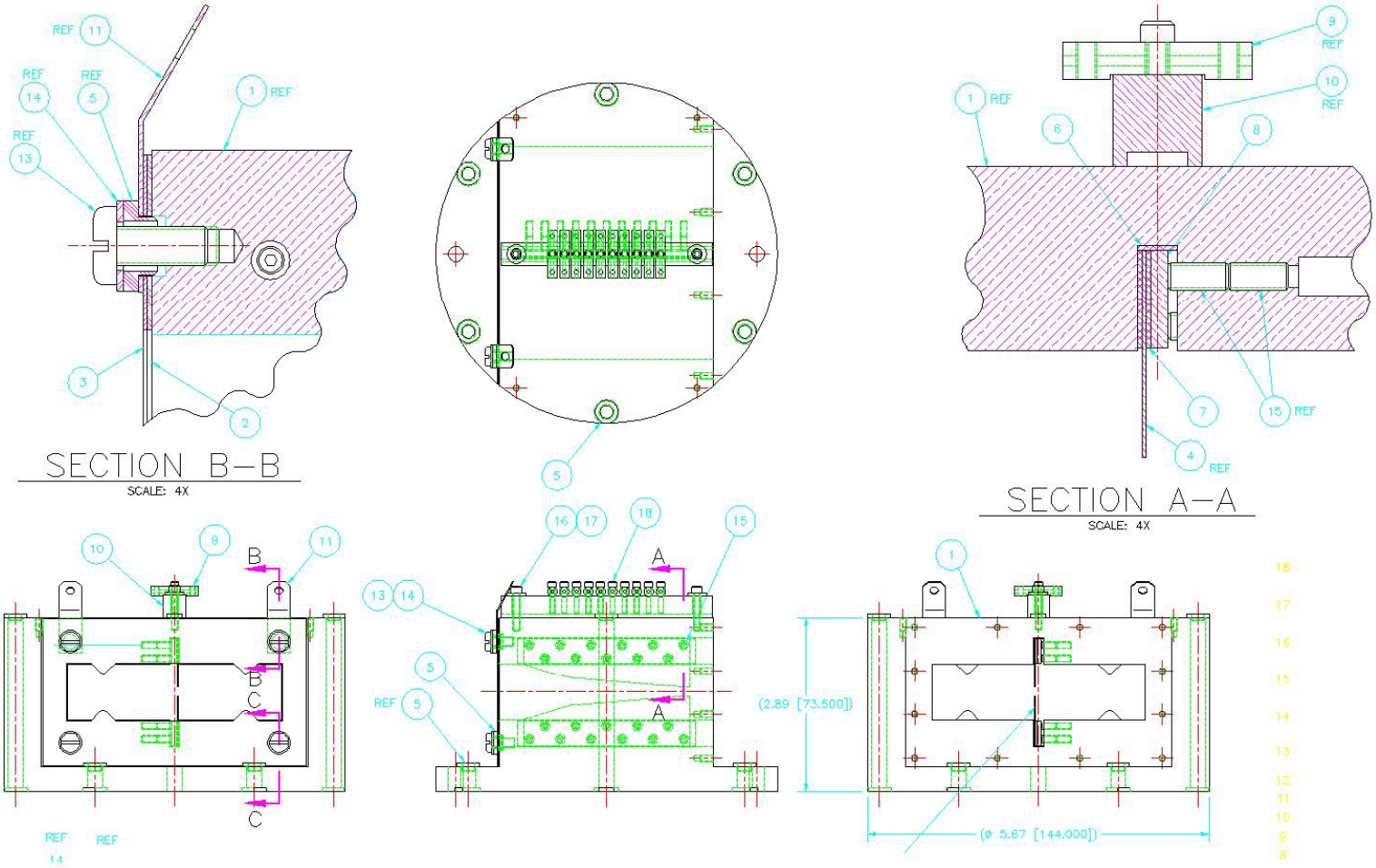

XBPM for Bending Magnet Beamline Front-End

B3-31 BM FE 2nd XBPM Monitor Assembly

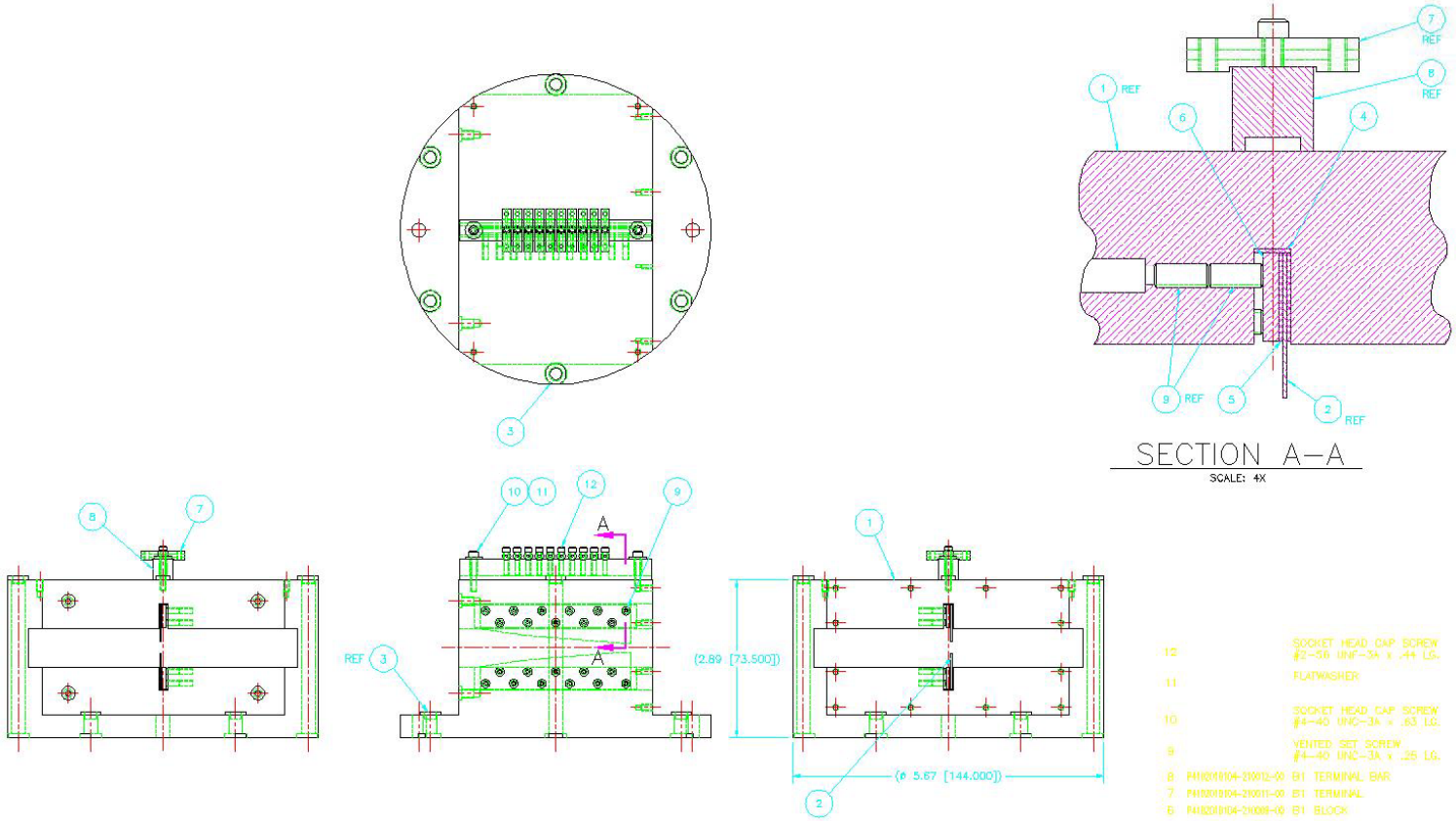

XBPM for Undulator/ Wiggler Beamline Front-End V.1.2

T2-80 ID FE XBPM Support Assembly

[Consists of: T2-81, T2-82(T2-23), T2-83(T2-22), T2-84]

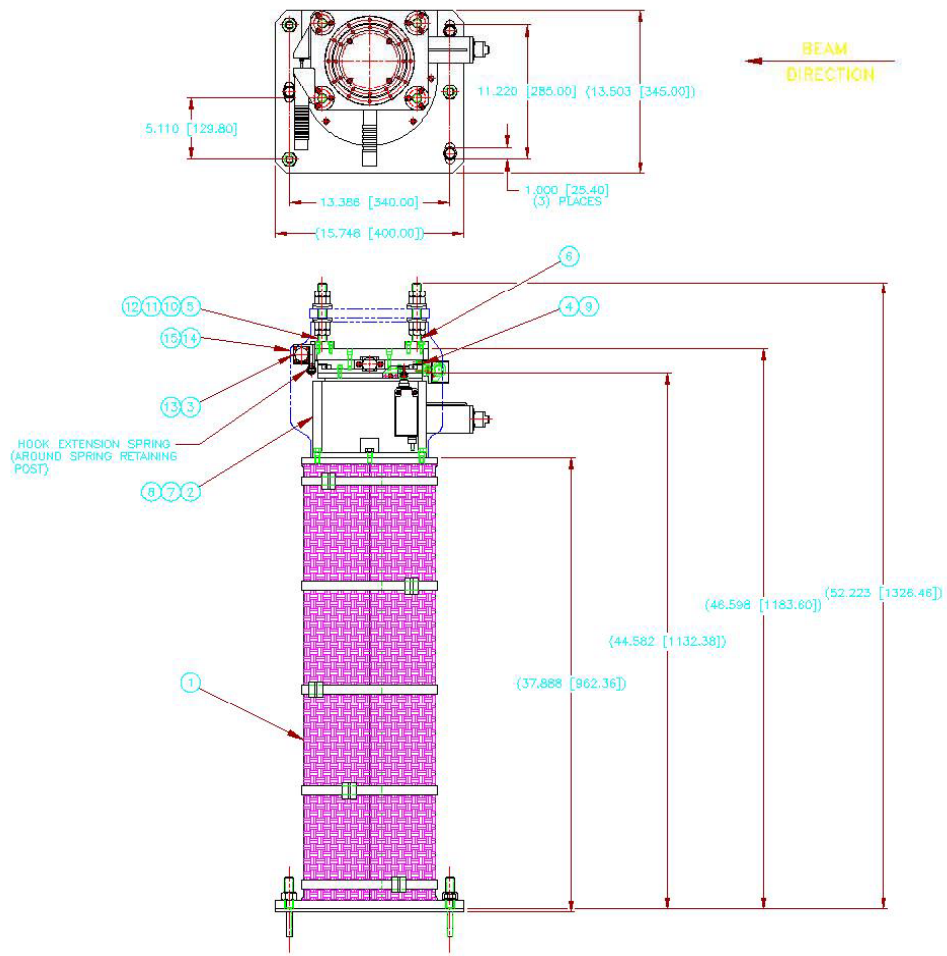

XBPM for Undulator/ Wiggler Beamline Front-End V.1.2

B1-41 ID FE V.1.2 Undulator 1st XBPM Monitor Assembly

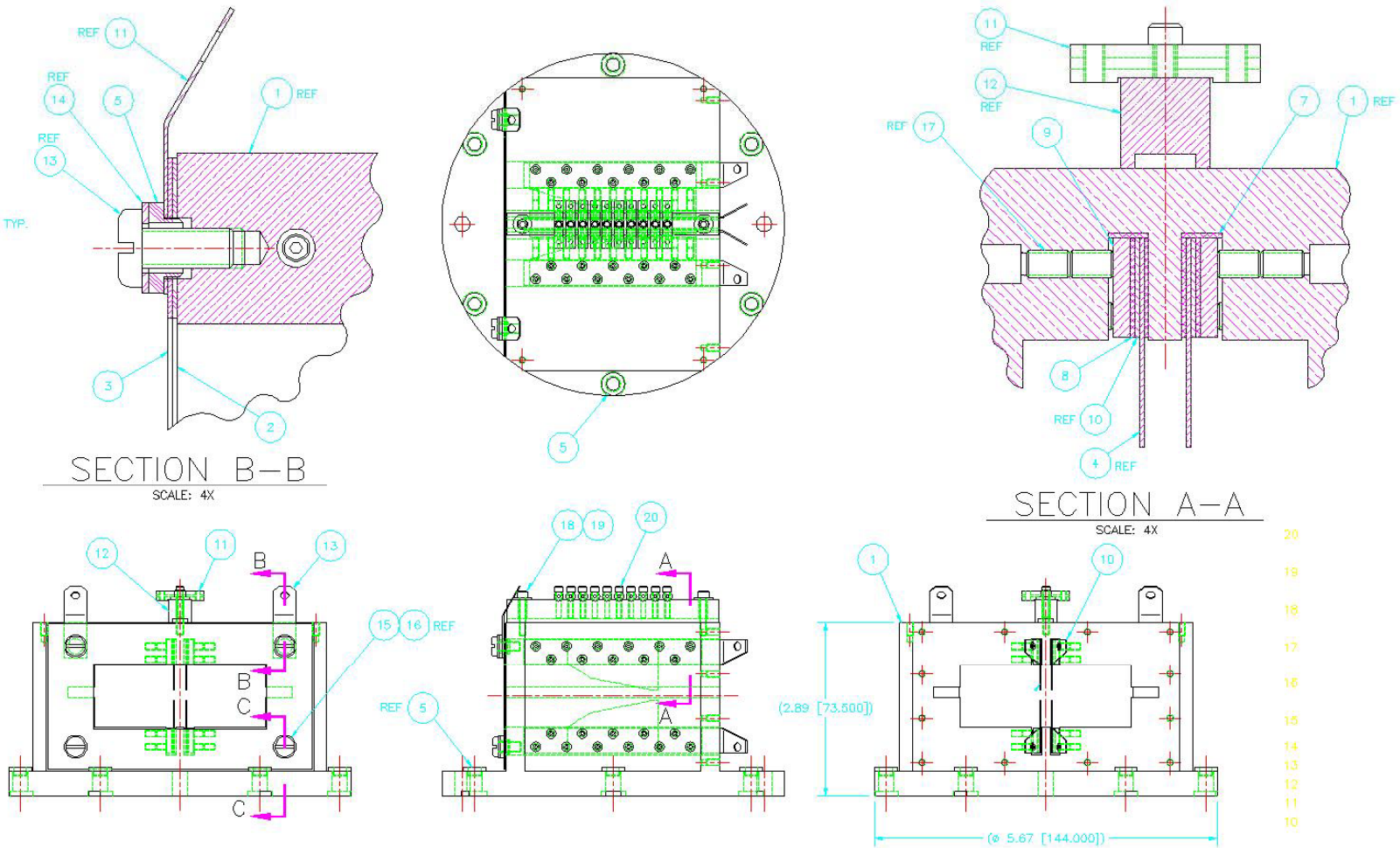

XBPM for Undulator/ Wiggler Beamline Front-End V.1.2

B1-41 ID FE V.1.2 Undulator 1st XBPM Monitor Assembly

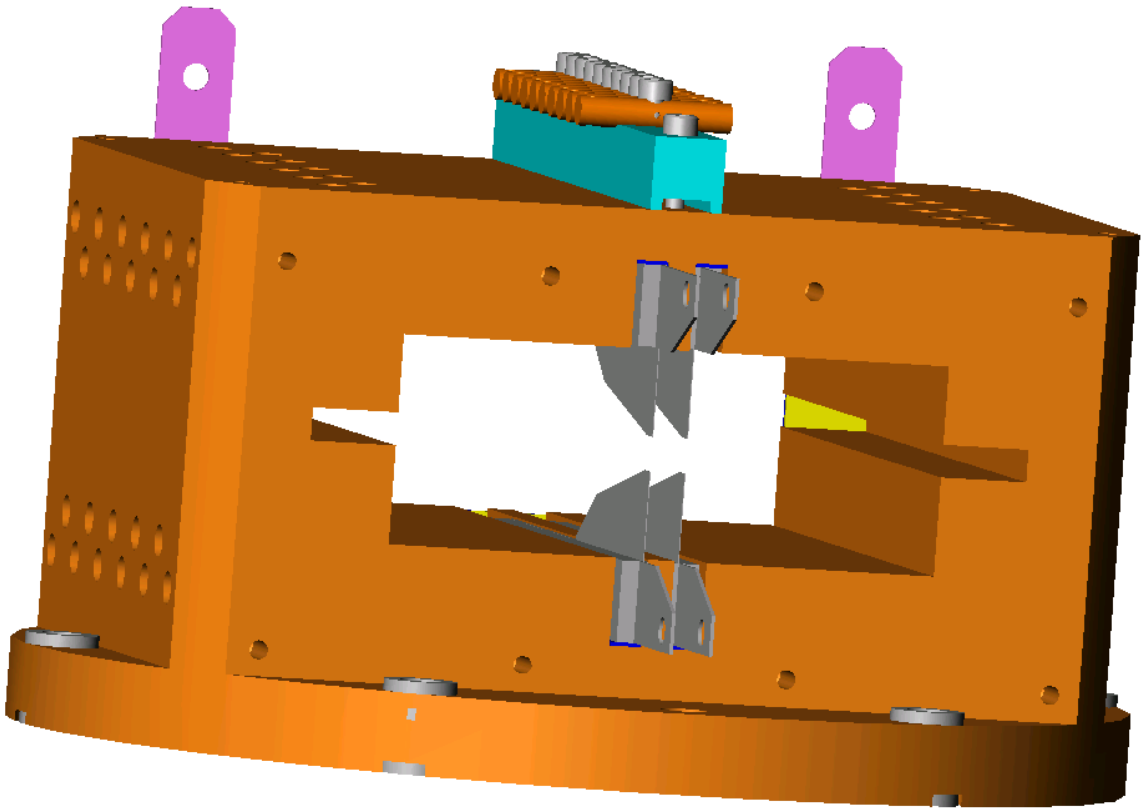

XBPM for Undulator/ Wiggler Beamline Front-End V.1.2

B1-41 ID FE V.1.2 Undulator 1st XBPM Monitor Assembly

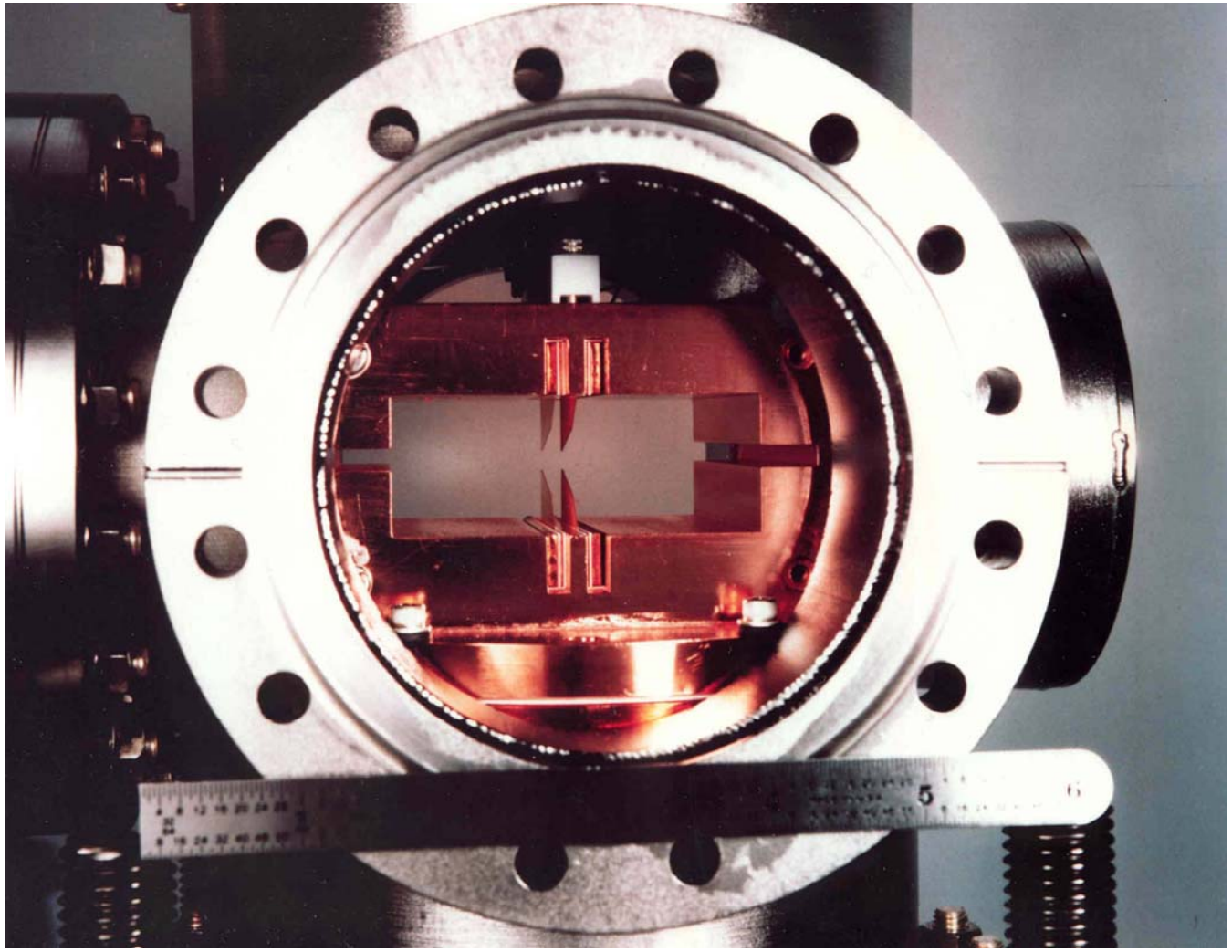

XBPM for Undulator/ Wiggler Beamline Front-End V.1.2

B1-51 ID FE V.1.2 Undulator 2nd XBPM Monitor Assembly

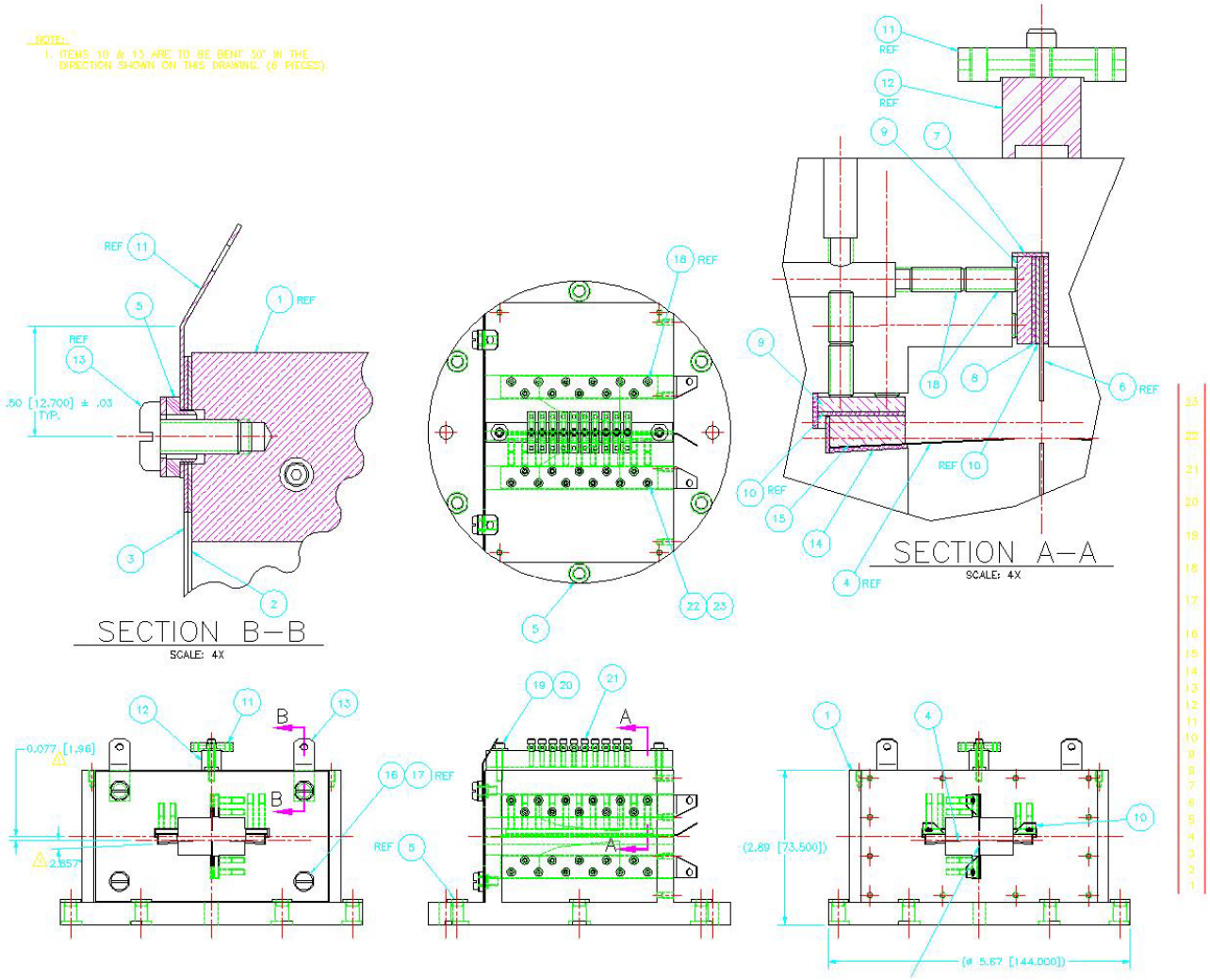

XBPM for Undulator/ Wiggler Beamline Front-End V.1.2

B1-51 ID FE V.1.2 Undulator 2nd XBPM Monitor Assembly

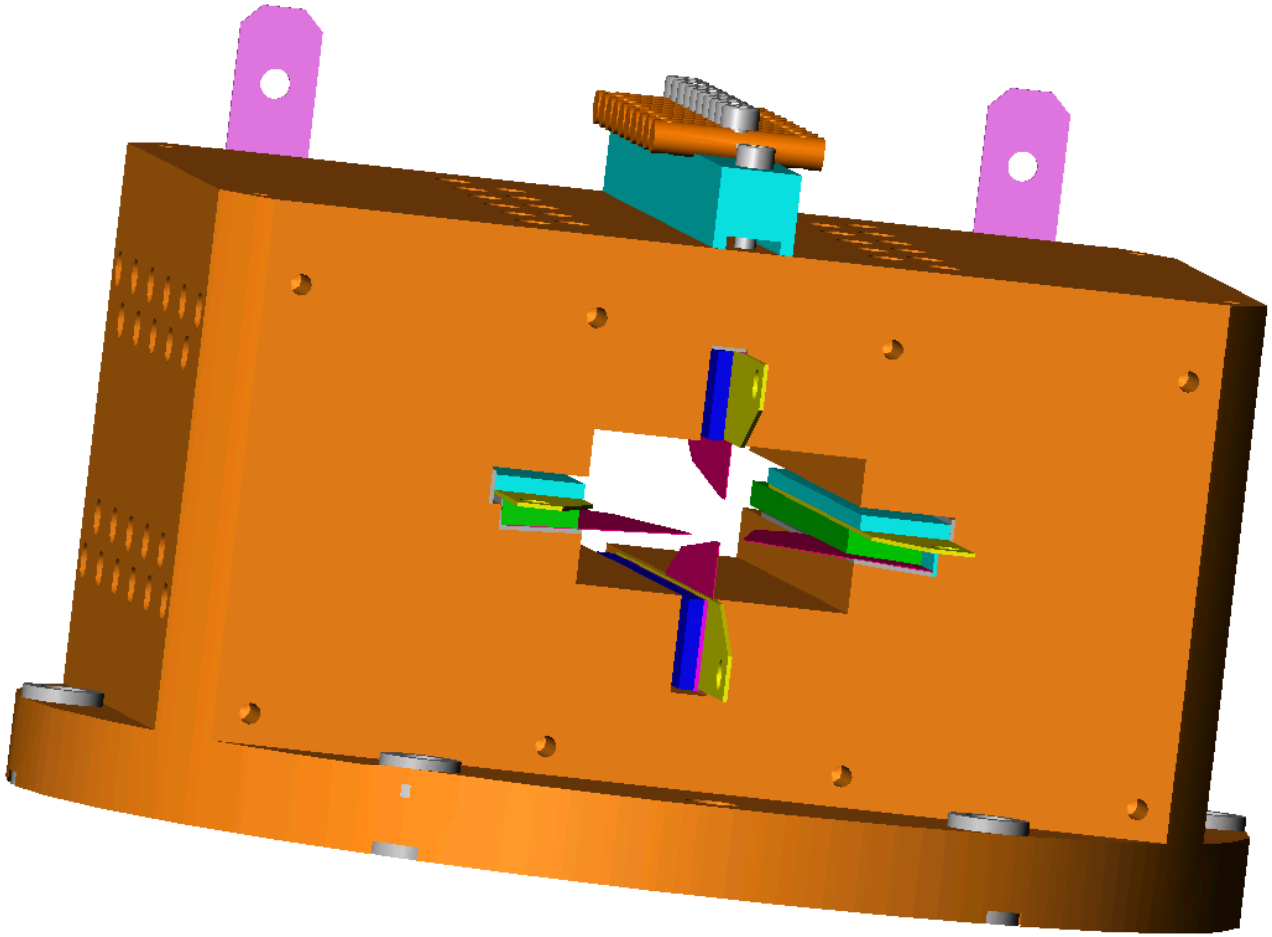

Revised 2nd XBPM for Undulator/ Wiggler Beamline Front-End V.1.2

B1-71 ID FE V.1.2 Undulator 2nd XBPM Monitor Assembly

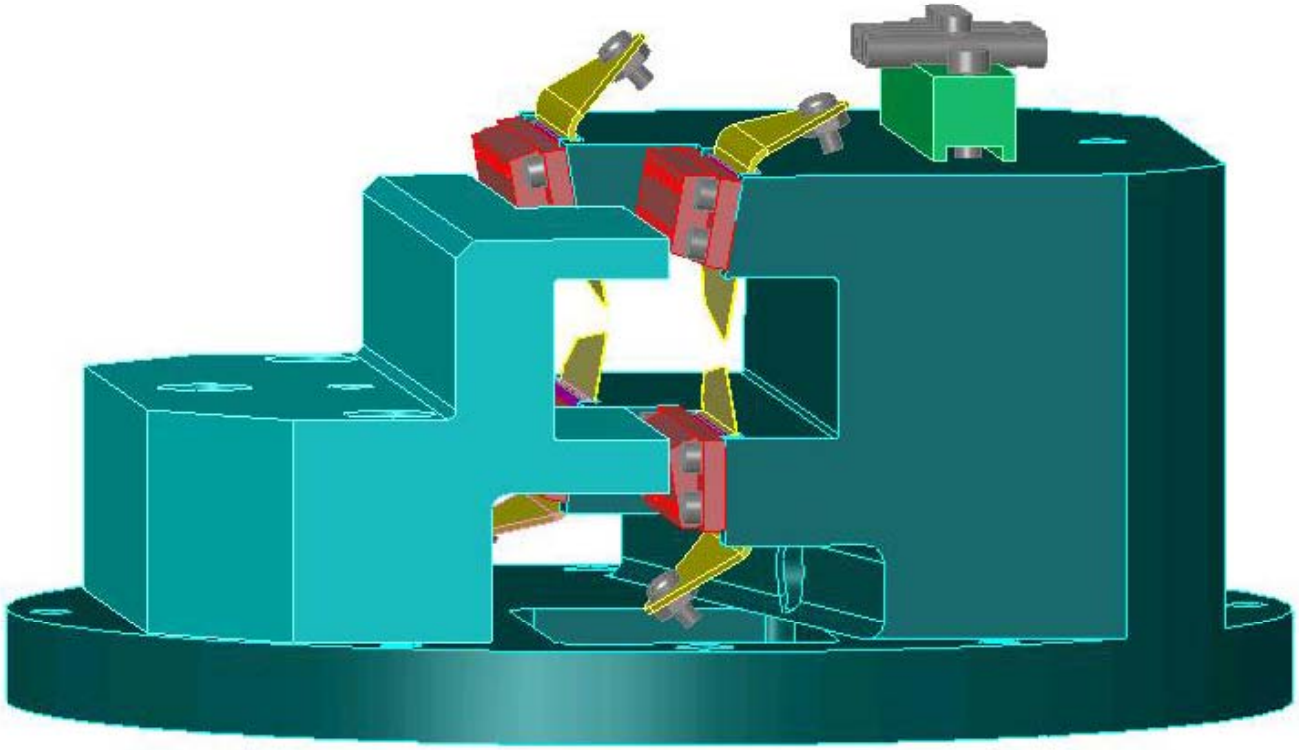

Revised 2nd XBPM for Undulator/ Wiggler Beamline Front-End V.1.2

B1-71 ID FE V.1.2 Undulator 2nd XBPM Monitor Assembly

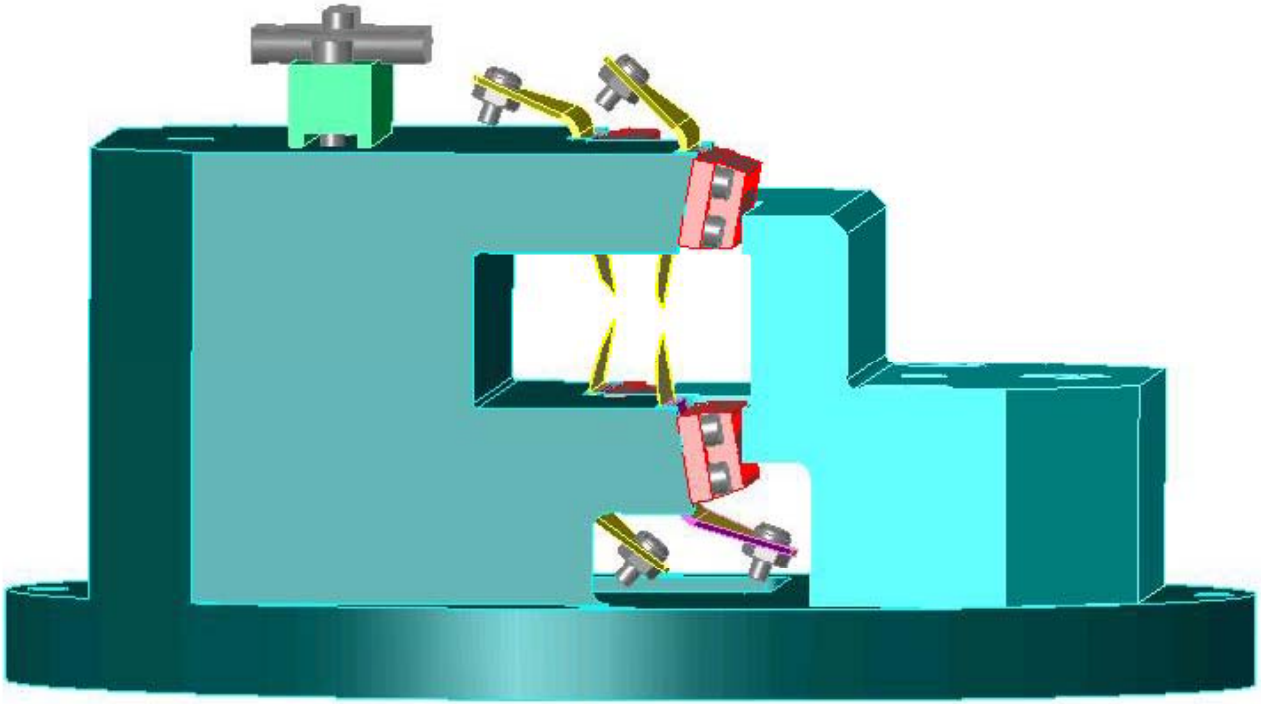

Revised 2nd XBPM for Undulator/ Wiggler Beamline Front-End V.1.2

B1-71 ID FE V.1.2 Undulator 2nd XBPM Monitor Assembly

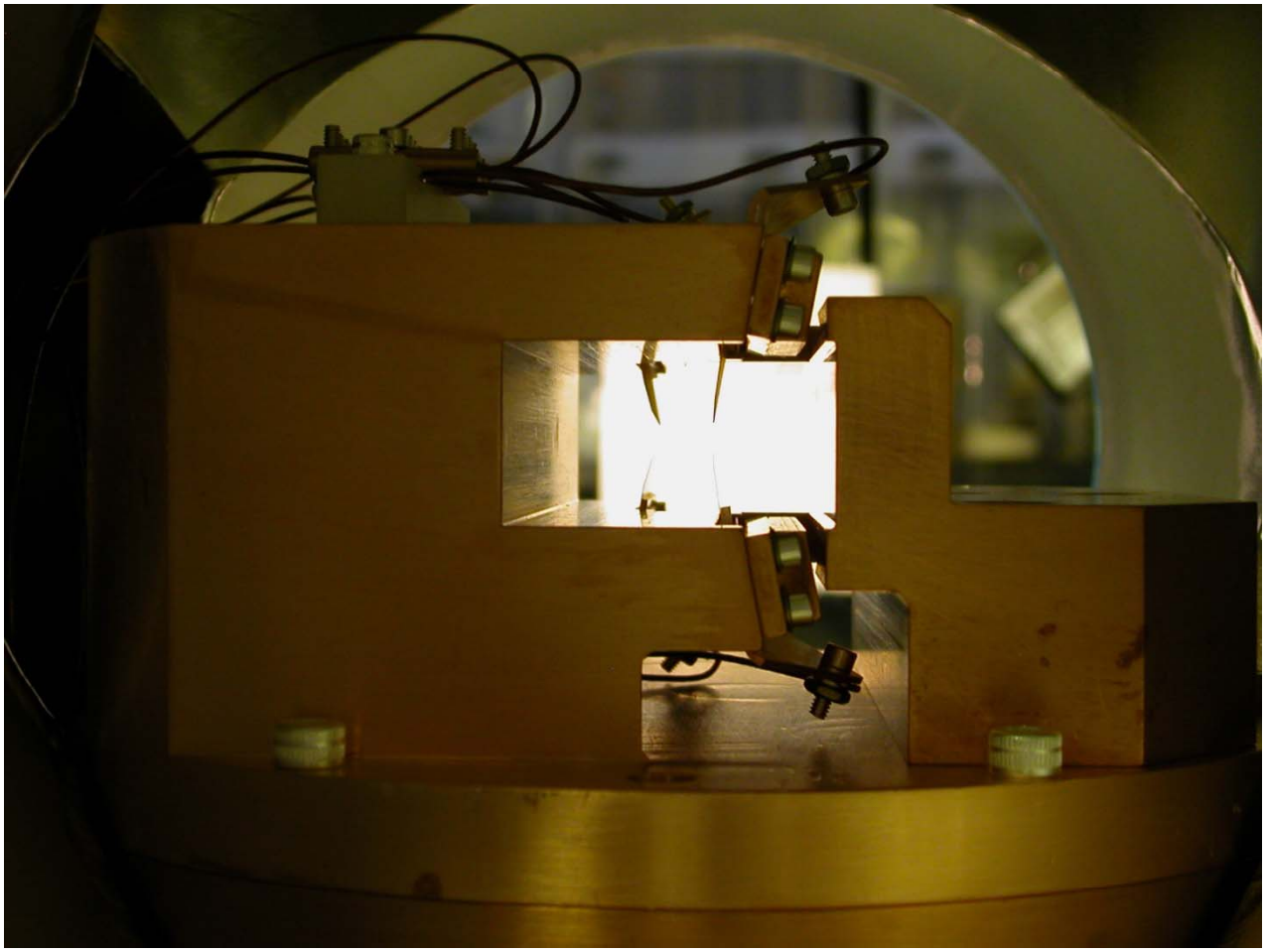

Insertion Device
Photon Beam Position Monitor
Blade Geometries

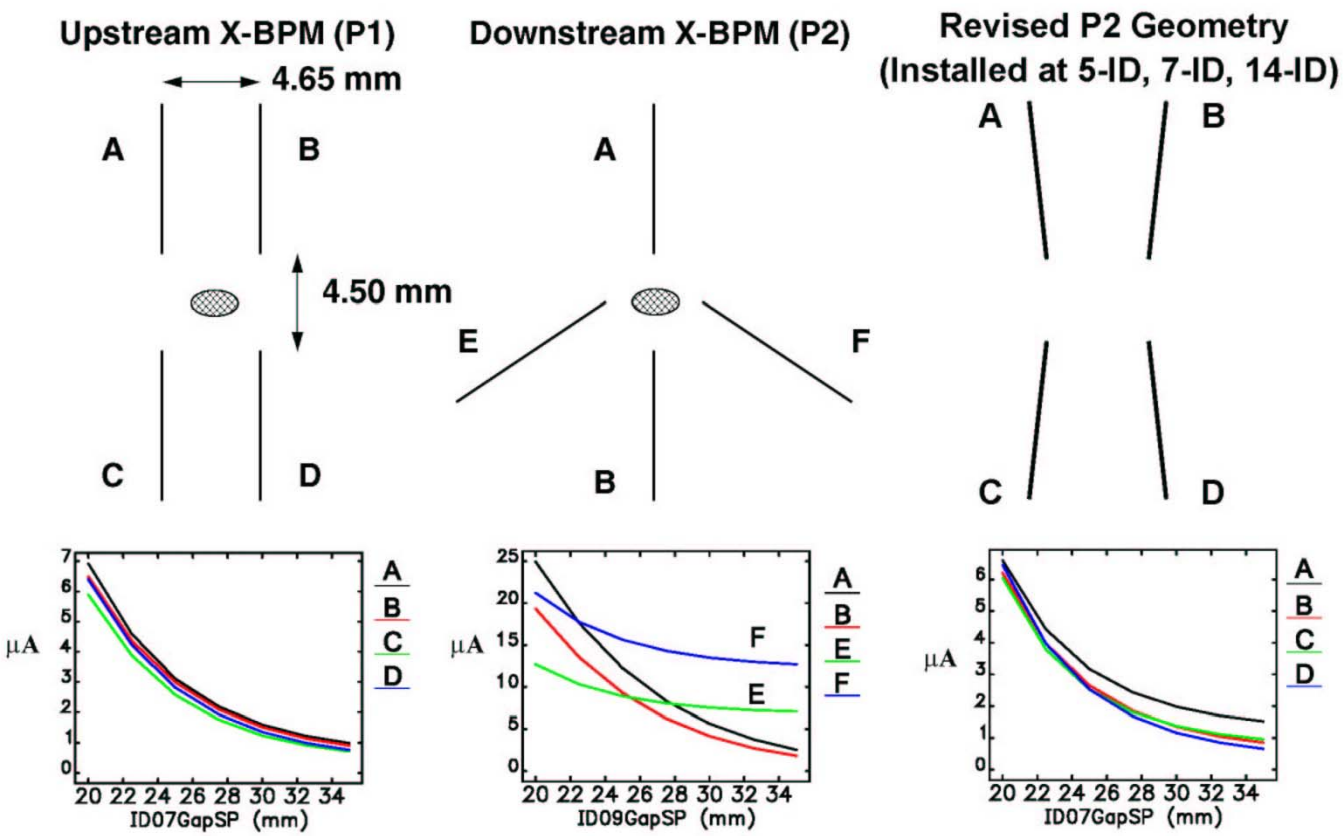

Courtesy of: G. Decker (APS/Users Operations Monthly Meeting, Feb. 10, 2006)

XBPM for Undulator/ Wiggler Beamline Front-End V.1.2

B1-21 ID FE V.1.2 Wiggler 1st XBPM Monitor Assembly

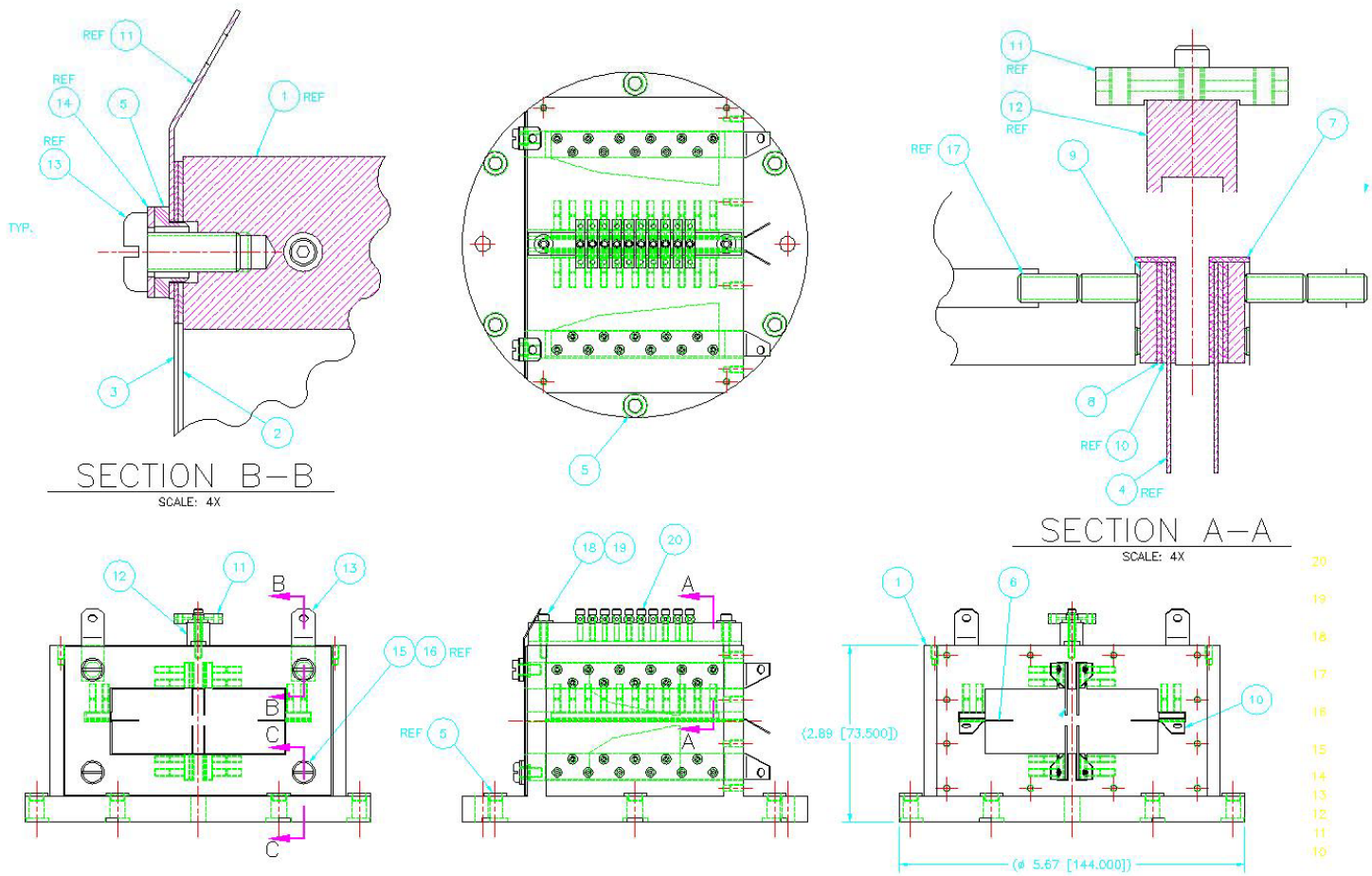

XBPM for Undulator/ Wiggler Beamline Front-End V.1.2

B1-31 ID FE V.1.2 Wiggler 2nd XBPM Monitor Assembly

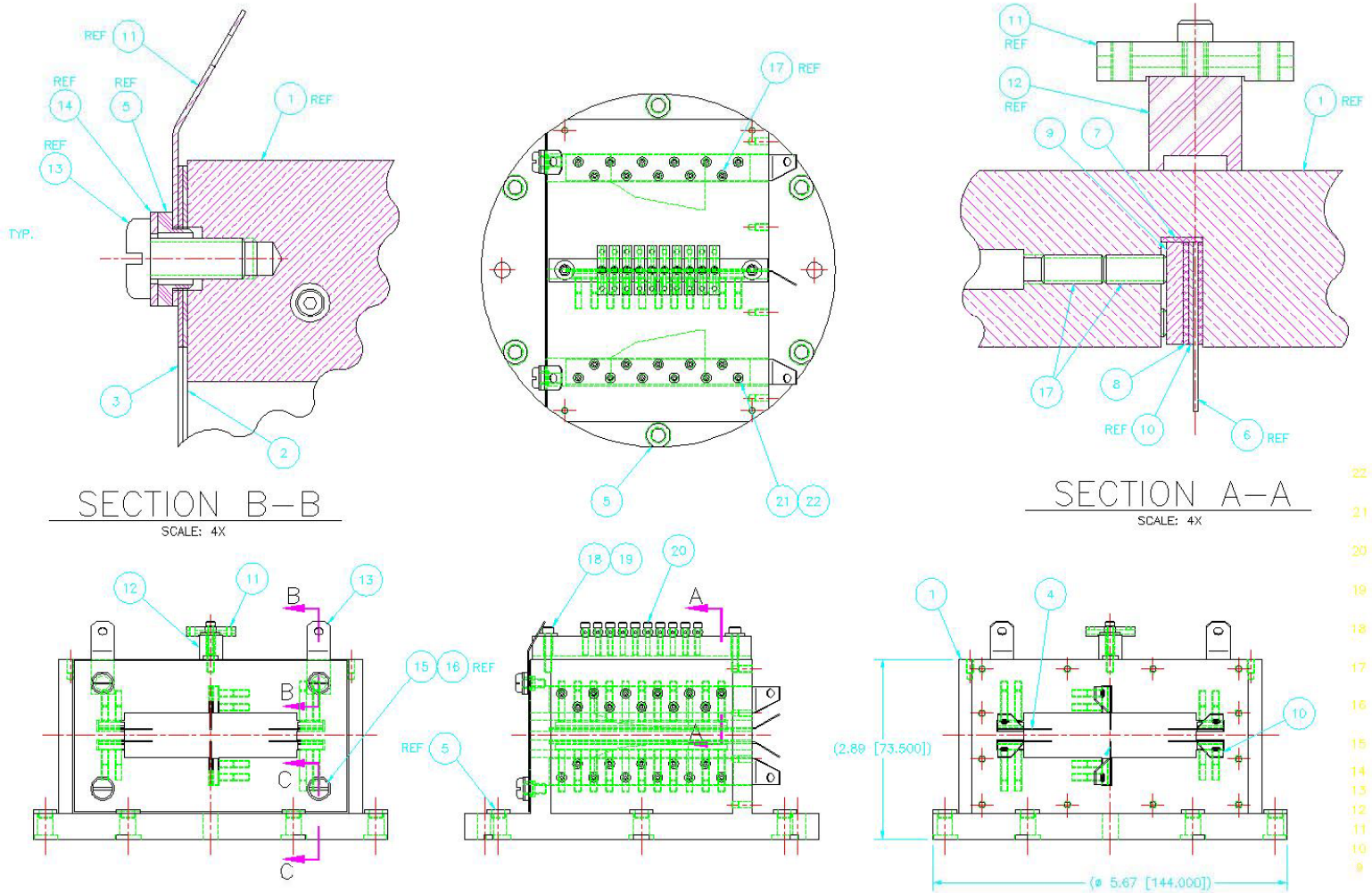

XBPM for Undulator-Only Beamline Front-End V.1.5

B2-60 ID FE V.1.5 Undulator 1st XBPM Vacuum Assembly

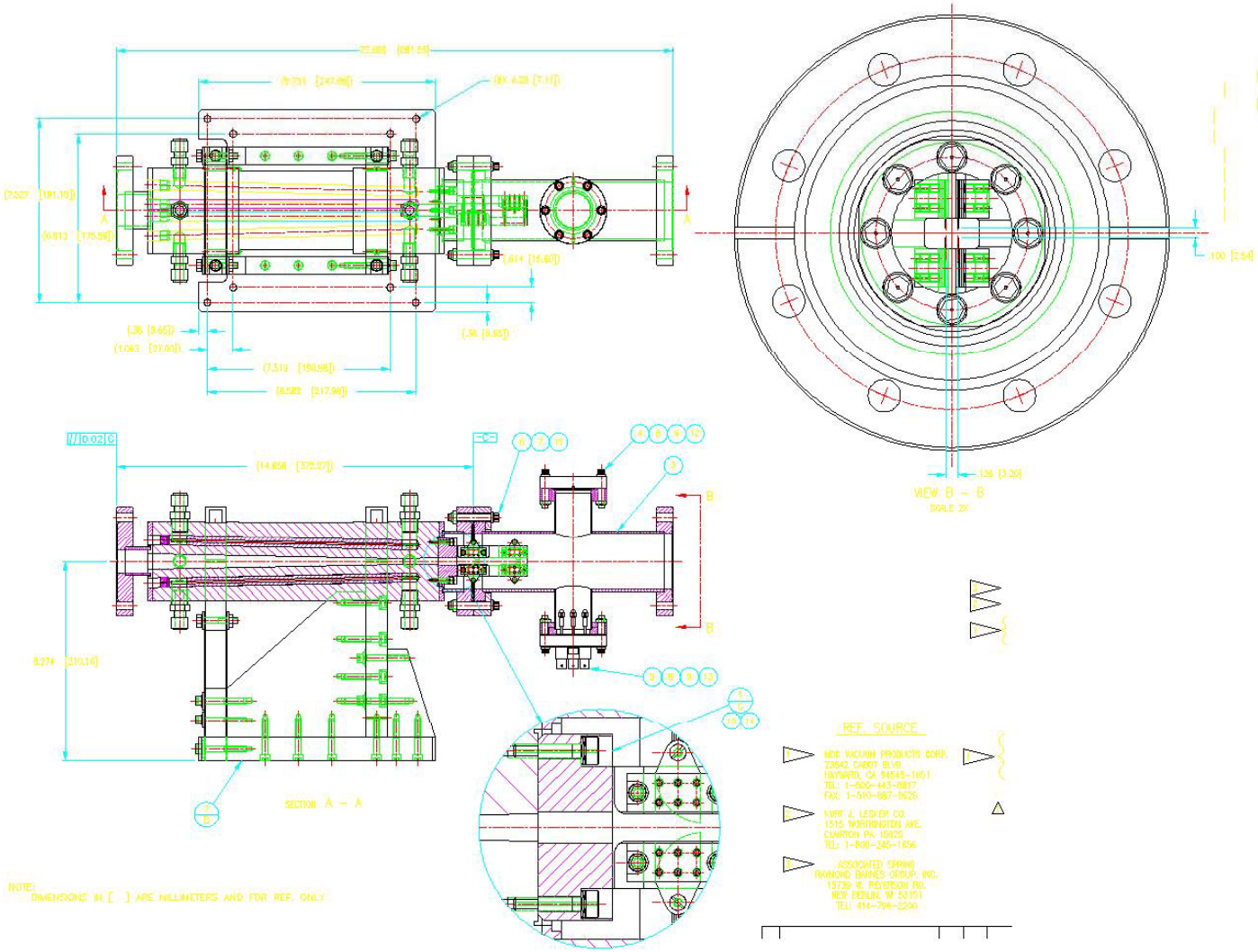

XBPM for Undulator-Only Beamline Front-End V.1.5

B2-60 ID FE V.1.5 Undulator 1st XBPM Vacuum Assembly

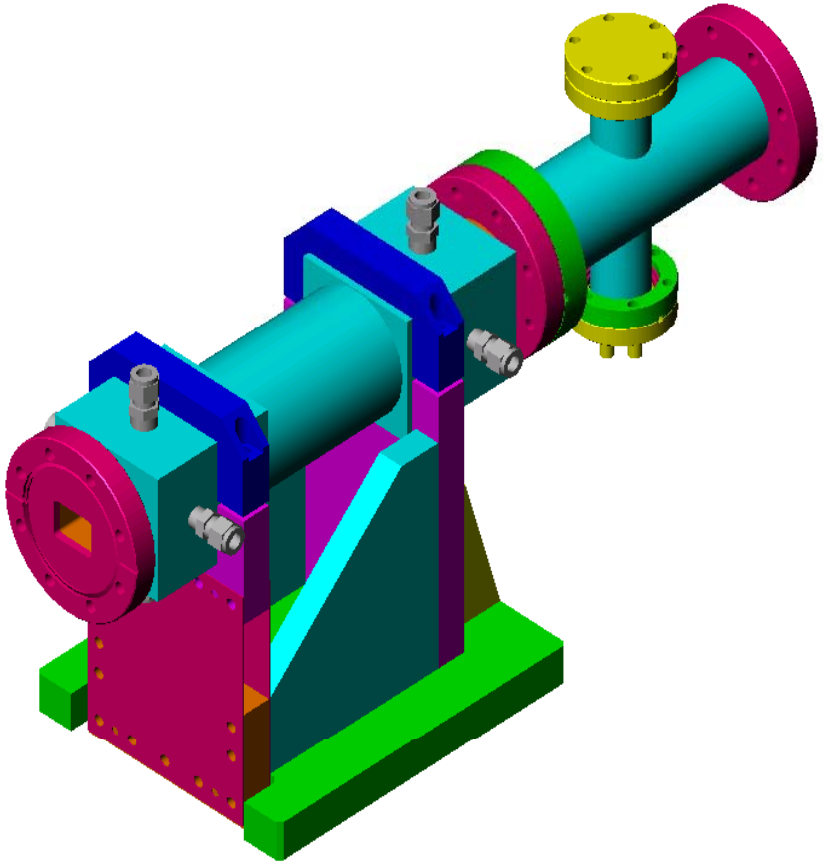

XBPM for Undulator-Only Beamline Front-End V.1.5

B2-60 ID FE V.1.5 Undulator 1st XBPM Vacuum Assembly

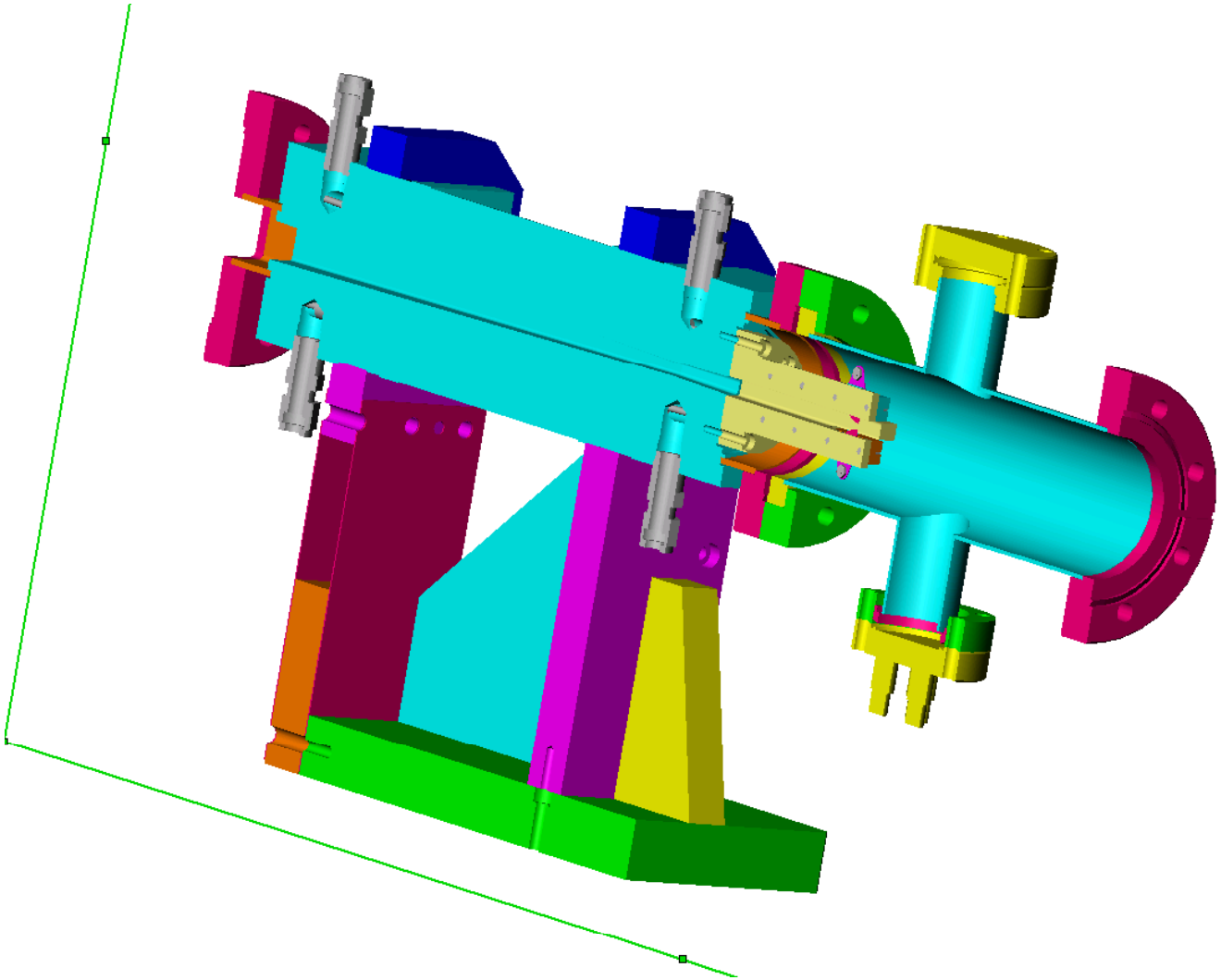

XBPM for Undulator-Only Beamline Front-End V.1.5

B2-6001 ID FE V.1.5 Undulator 1st XBPM Monitor Assembly

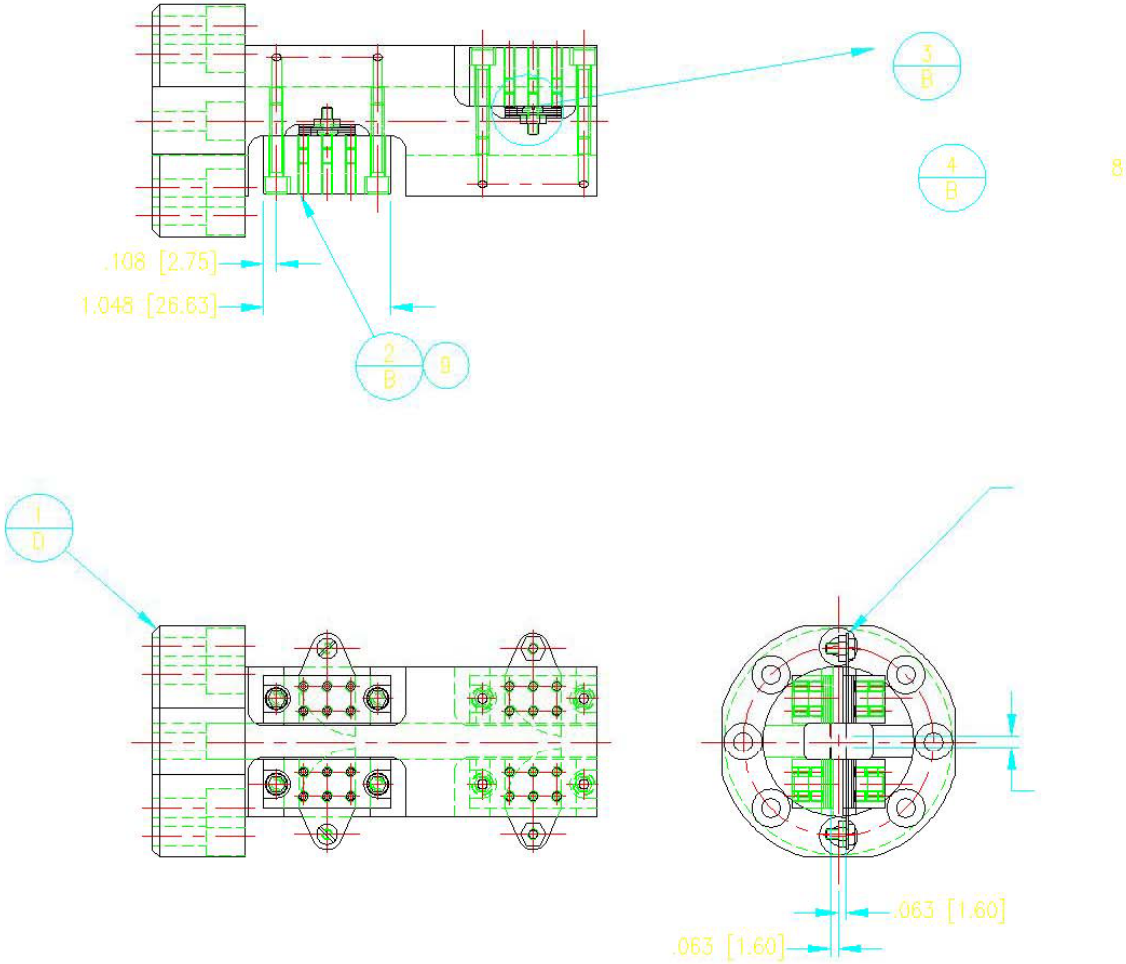

XBPM for Undulator-Only Beamline Front-End V.1.5

B2-6001 ID FE V.1.5 Undulator 1st XBPM Monitor Assembly

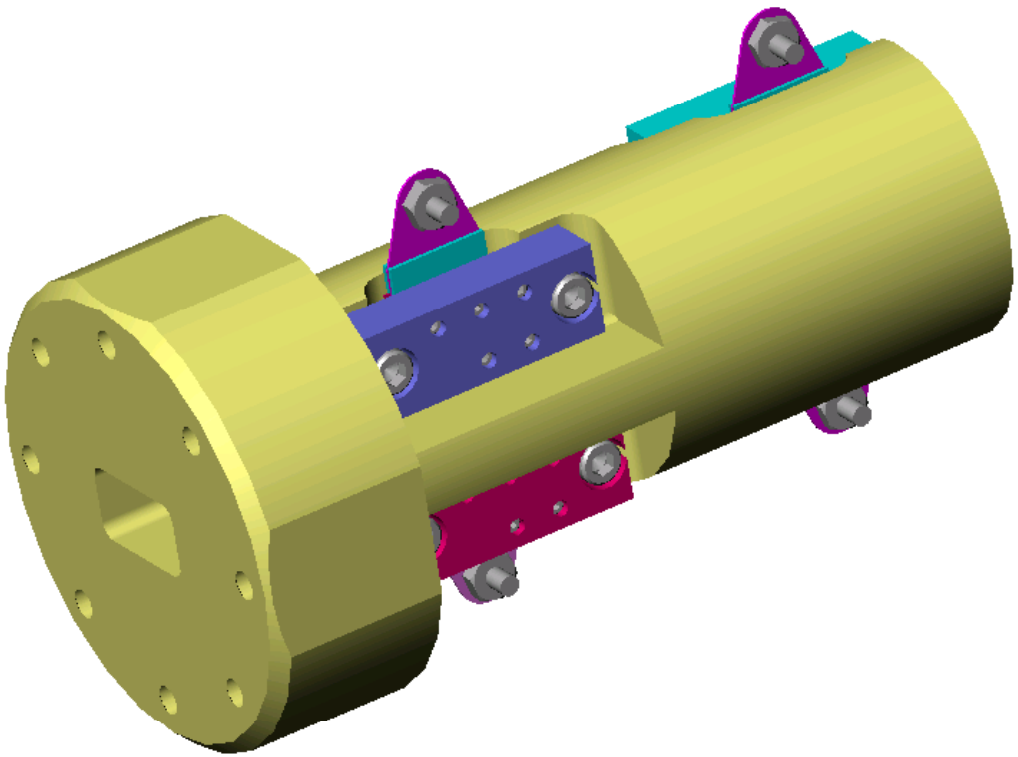

XBPM for Undulator-Only Beamline Front-End V.1.5

B2-6001 ID FE V.1.5 Undulator 1st XBPM Monitor Assembly

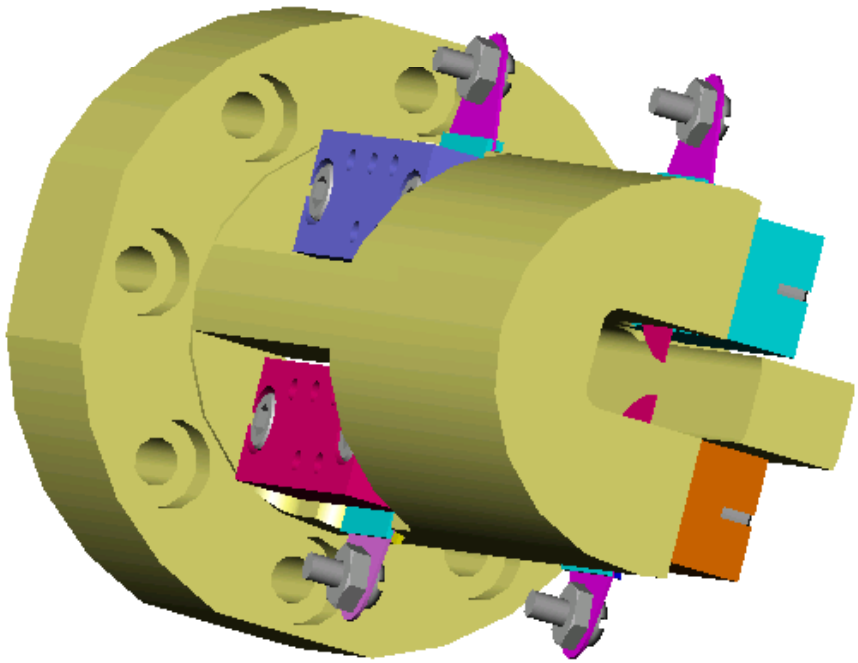

XBPM for Undulator-Only Beamline Front-End V.1.5

B2-70 ID FE V.1.5 Undulator 2nd XBPM Vacuum Assembly

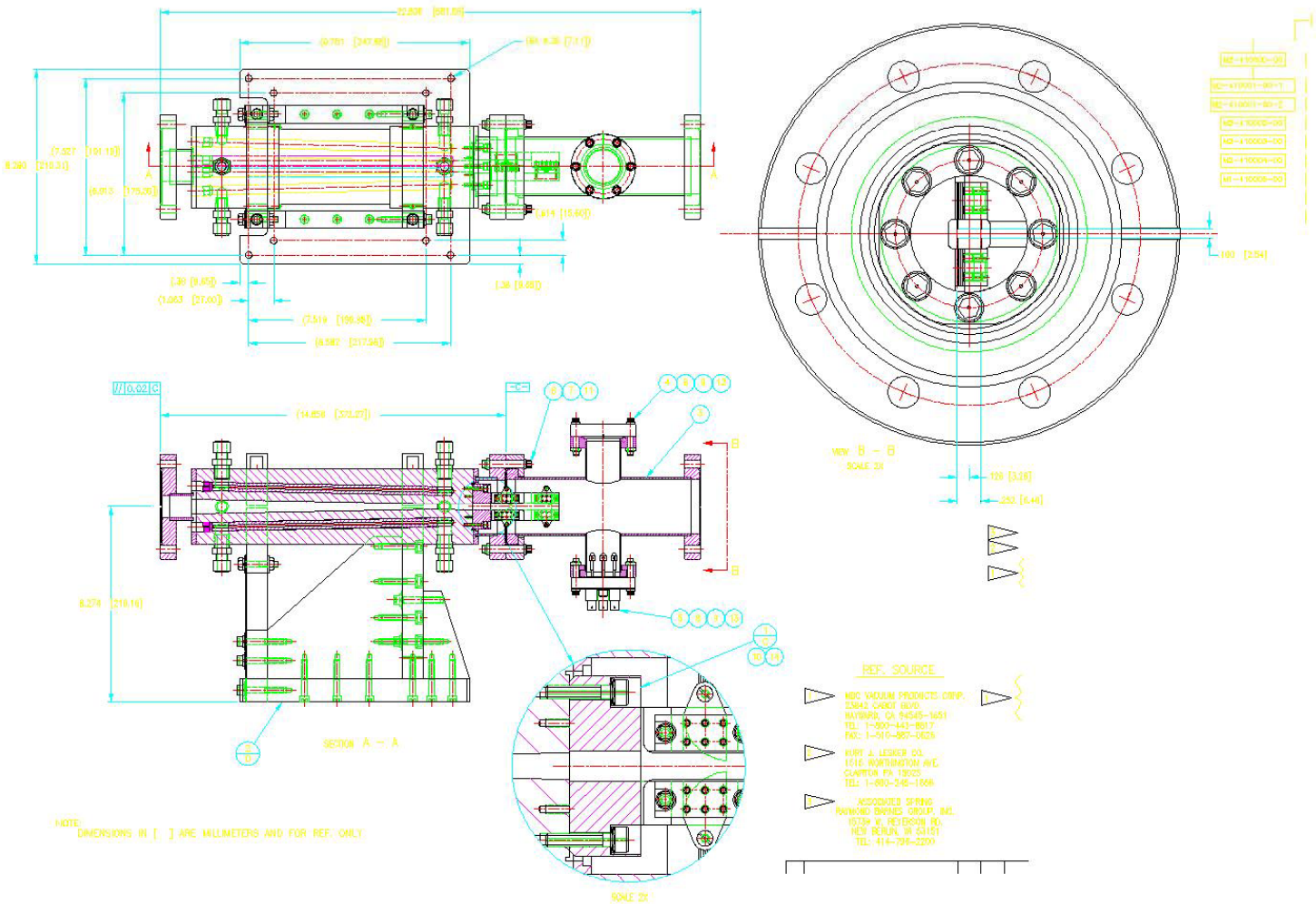

XBPM for Undulator-Only Beamline Front-End V.1.5

B2-7001 ID FE V.1.5 Undulator 2nd XBPM Monitor Assembly

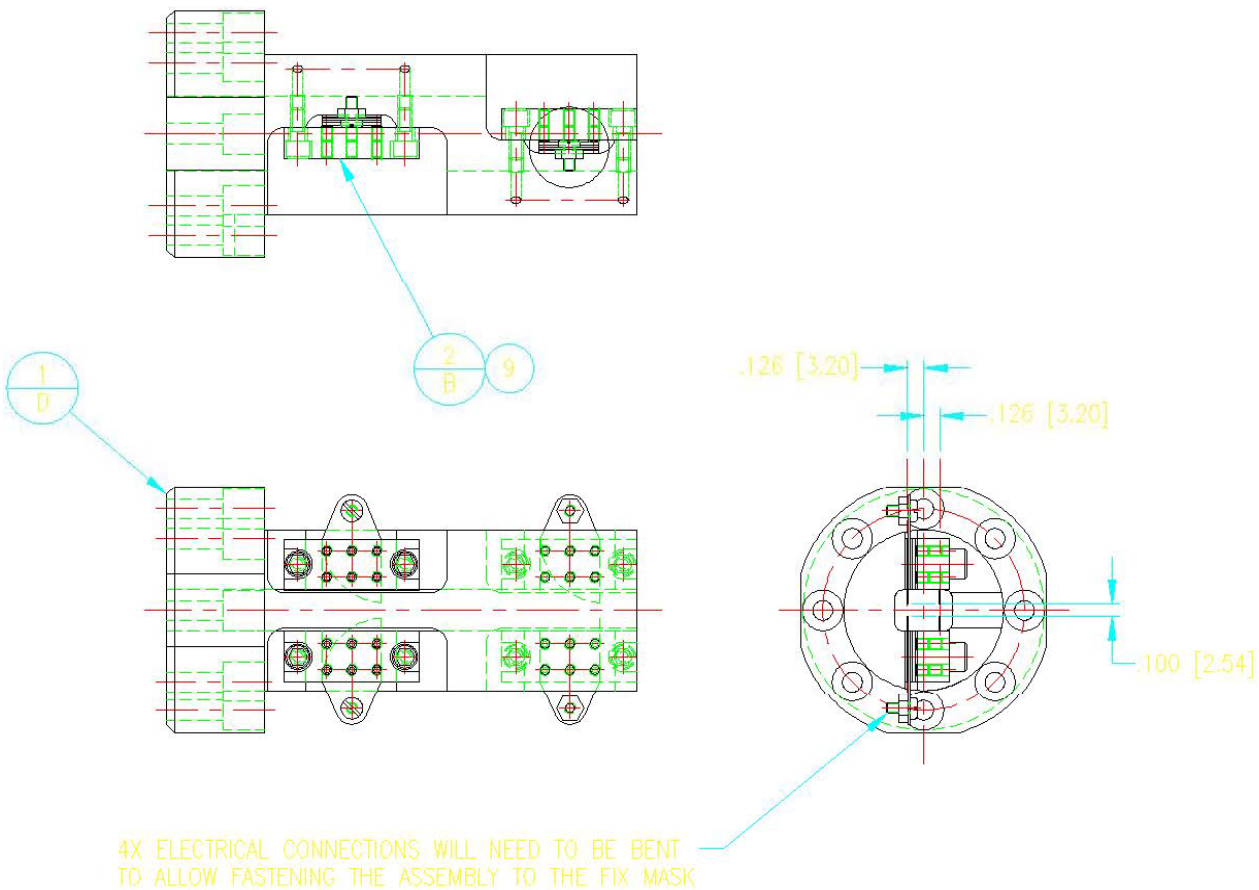

XBPM for Undulator-Only Beamline Front-End V.1.5

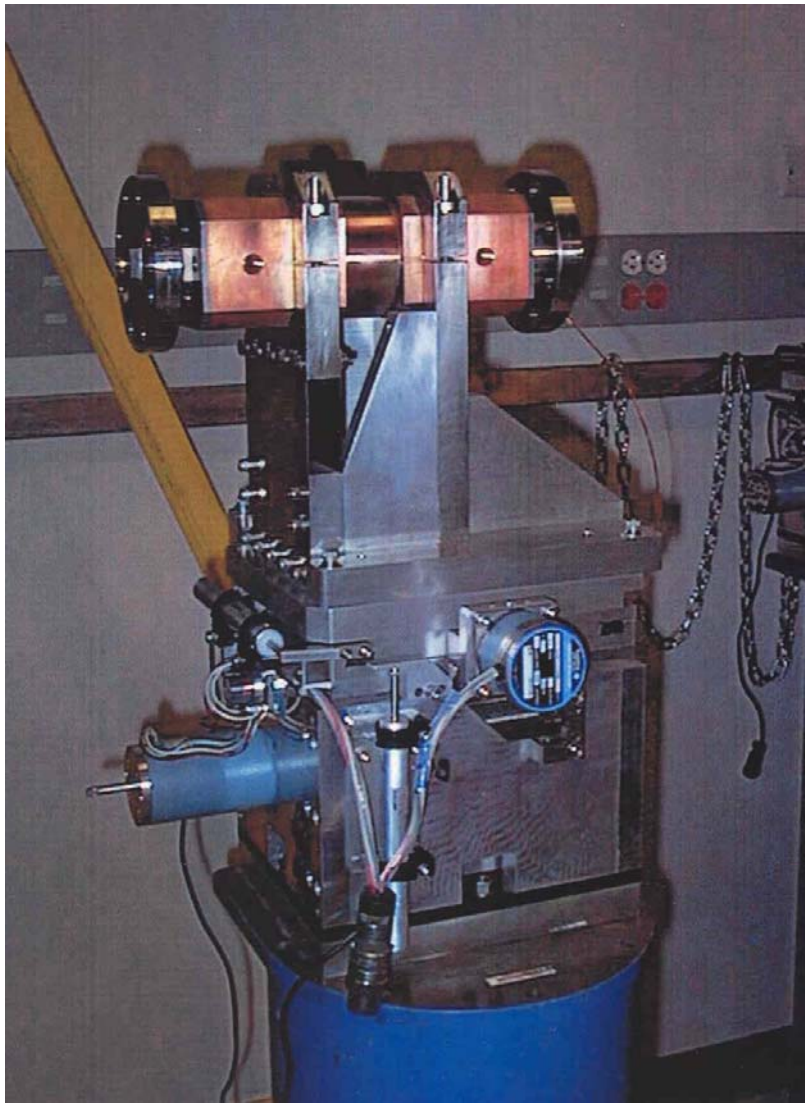

APS Smart XBPM system

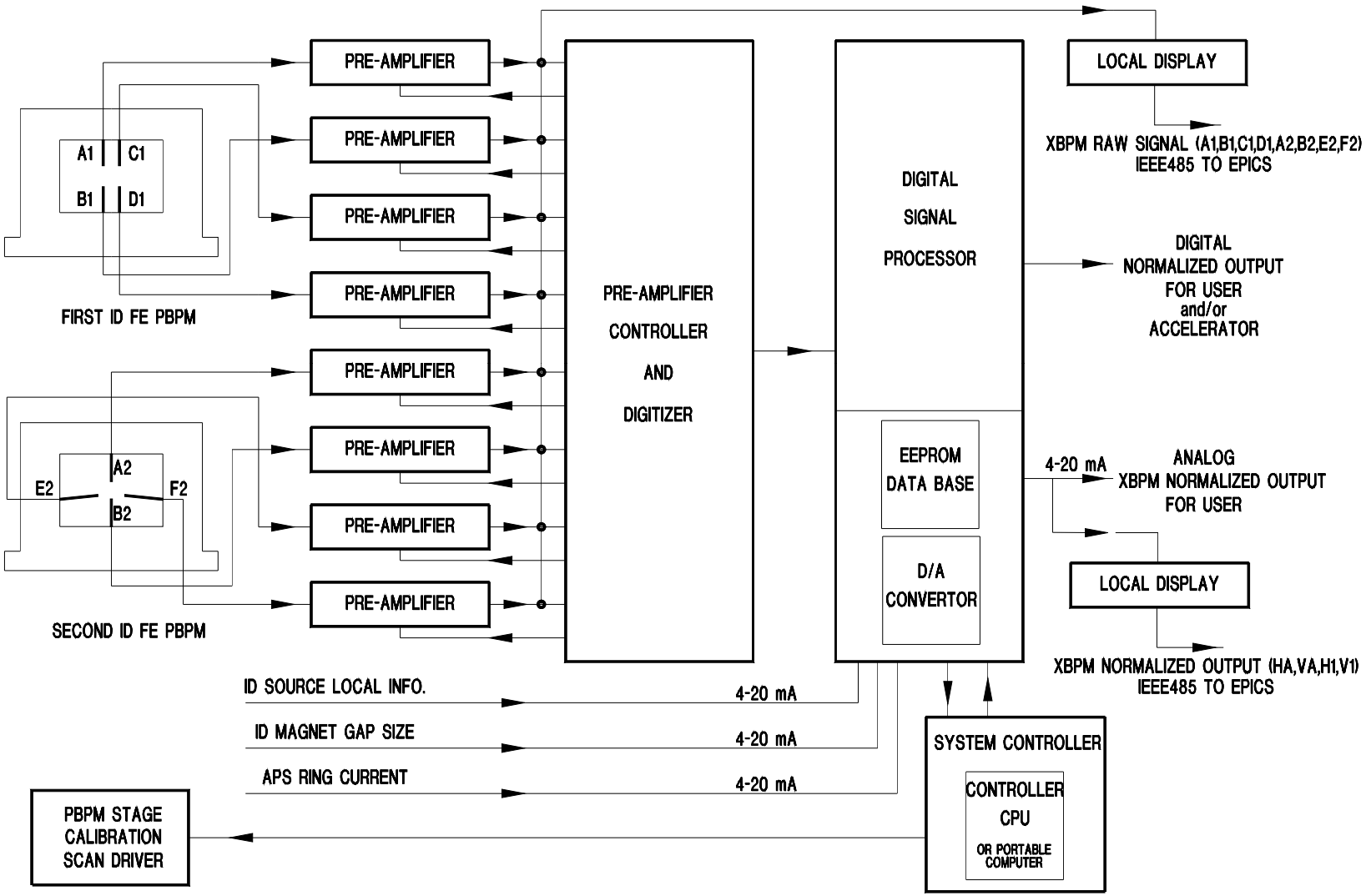

APS Smart XBPM system

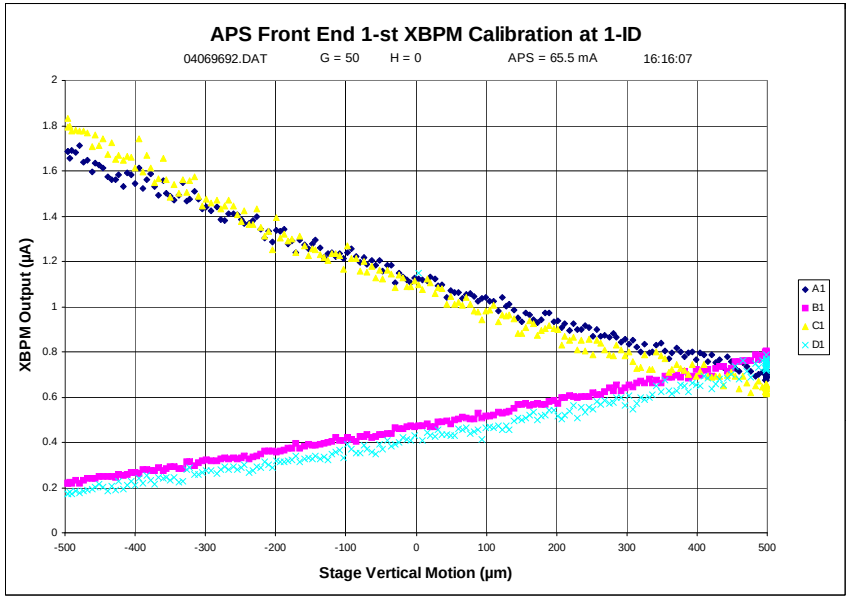

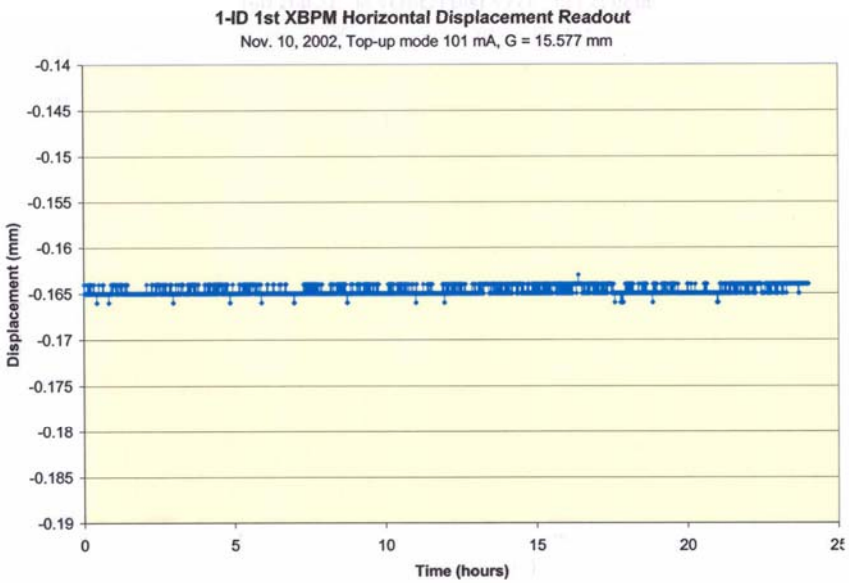

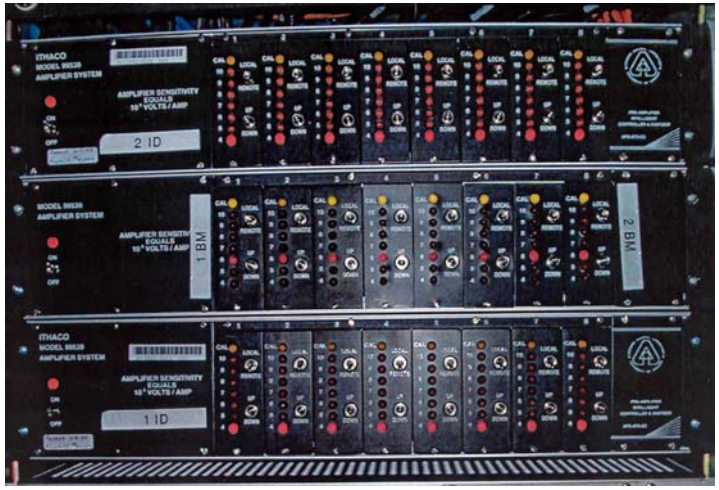

APS Smart XBPM system

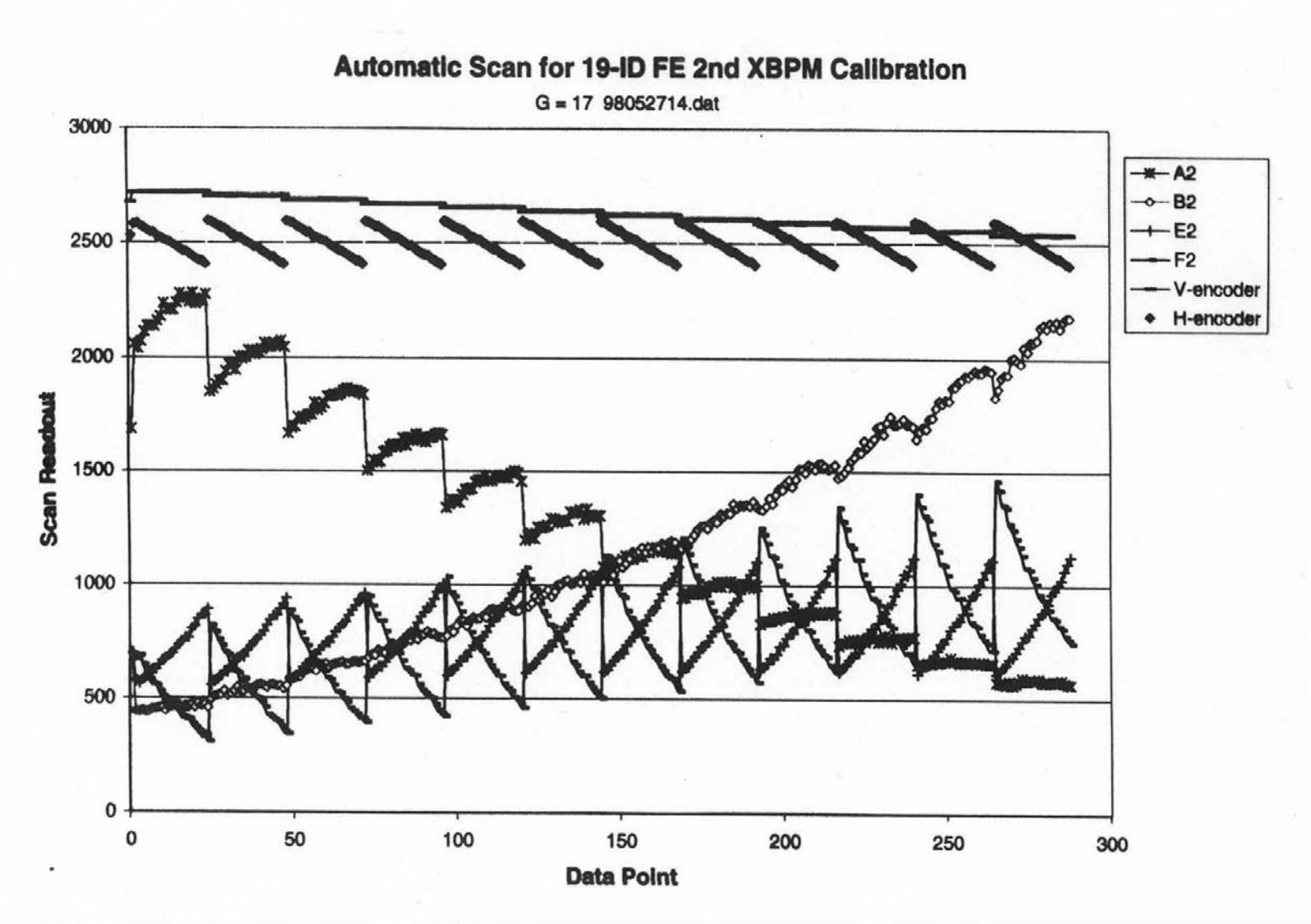

APS Smart XBPM system

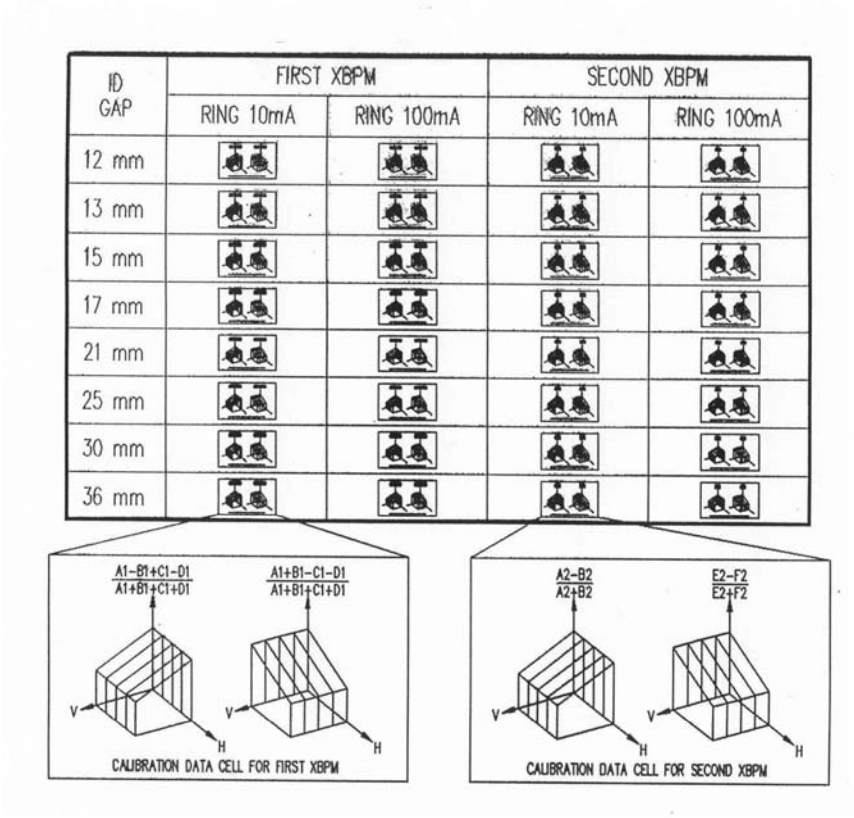

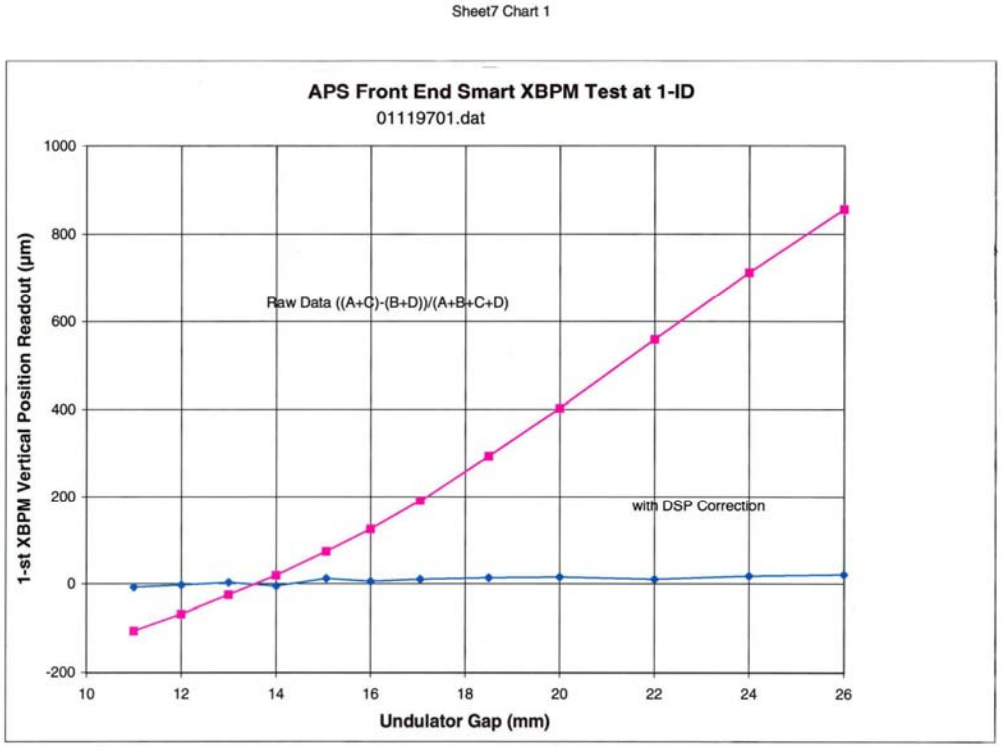

APS Smart XBPM system

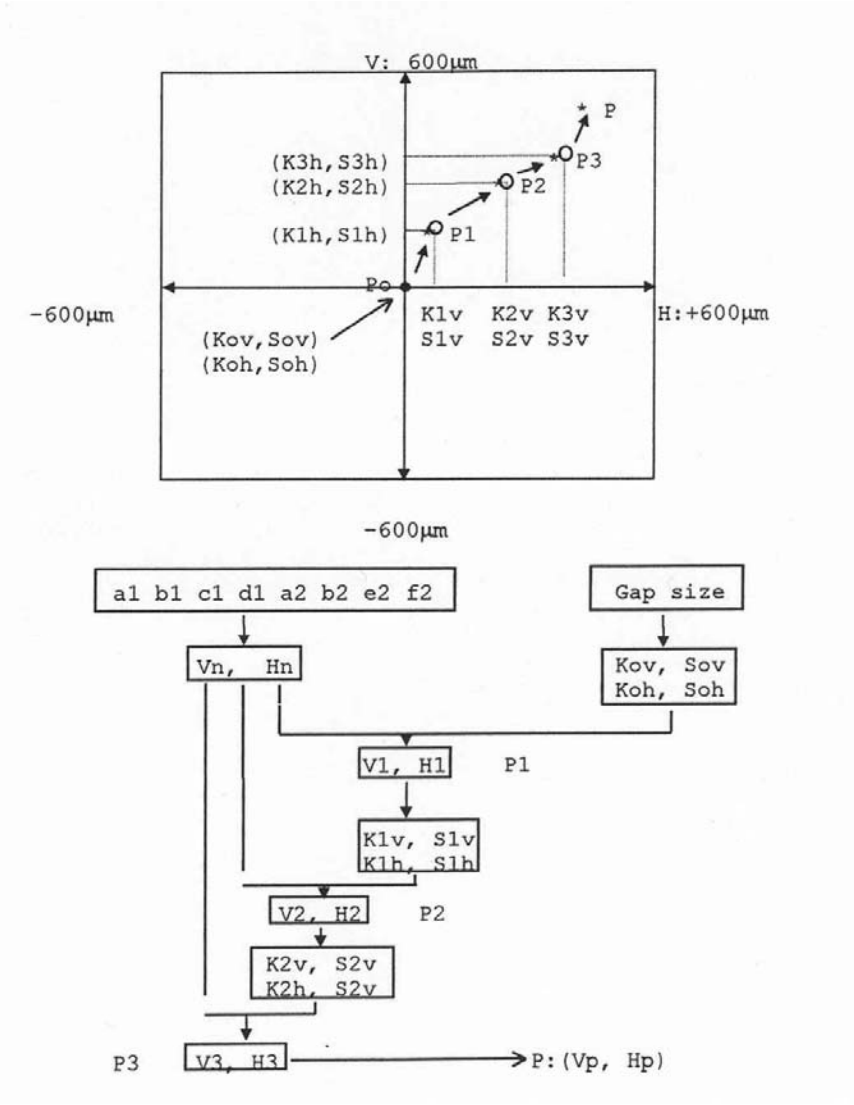

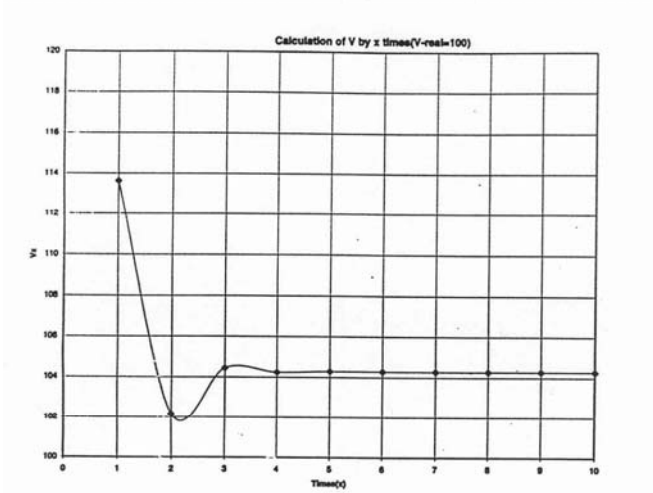

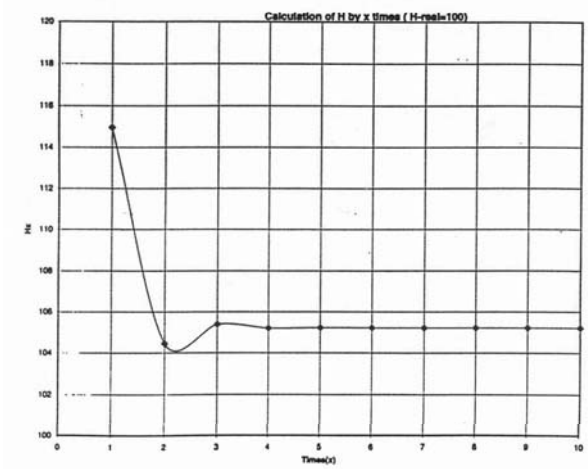

Concept for redirecting stray radiation from XBPMs

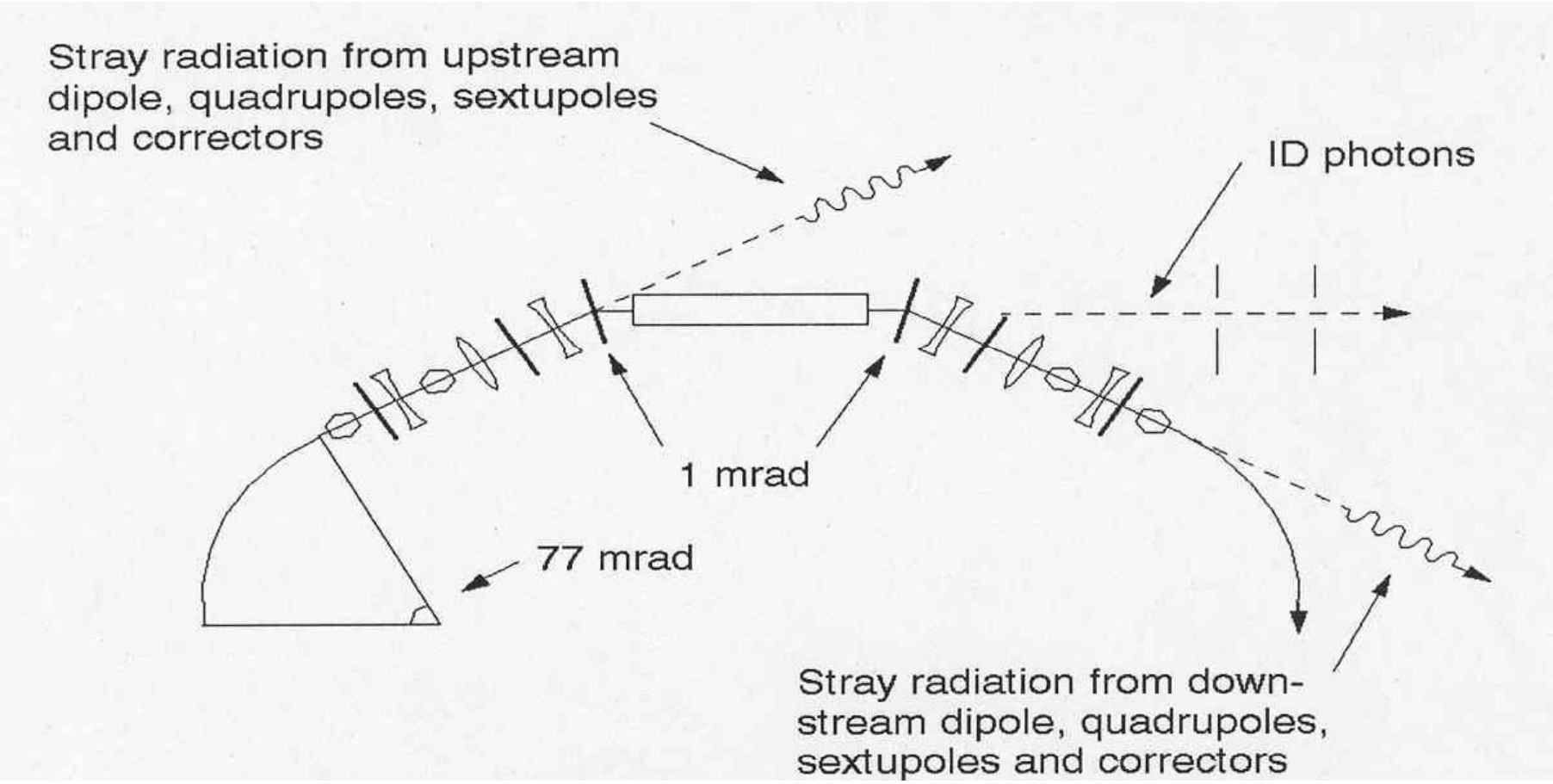

Courtesy of: G. Decker and O. Singh (APS)

Beam Position Monitors used for Vertical Orbit Correction (2/9/06)

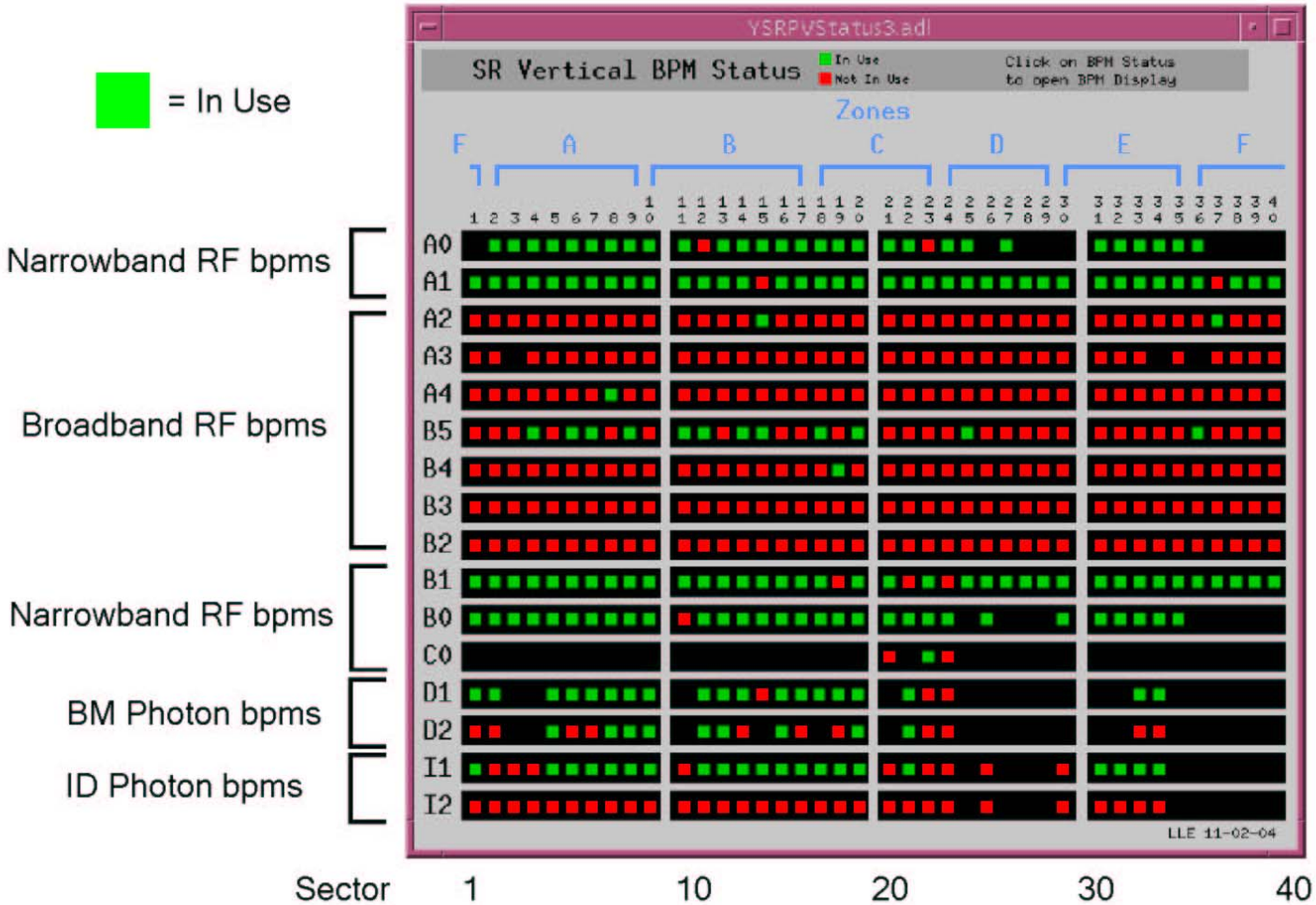

Courtesy of: G. Decker (APS/Users Operations Monthly Meeting, Feb. 10, 2006)

APS Work Project for Canadian Light Source (CLS) XBPMs

The APS participation in this work project involves the following aspects:

1. Design of the XBPM sensor elements to be fit onto the existing appropriate CLS front-end fixed masks and positioning mechanisms. The particular sets of XBPM elements to be designed are for a single XBPM assembly for each of the following CLS front-ends:

   a. CLS 08ID undulator beamline (vertical and horizontal positioning),

   b. CLS 06ID wiggler beamline (vertical positioning),

   c. CLS 02BM-2 bending magnet beamline (vertical positioning).

2. Fabrication of the XBPM sensor elements listed above at the APS.

3. Partial supervision of the final assembly and test of the XBPMs at the CLS.

APS Work Project for Canadian Light Source (CLS) XBPMs

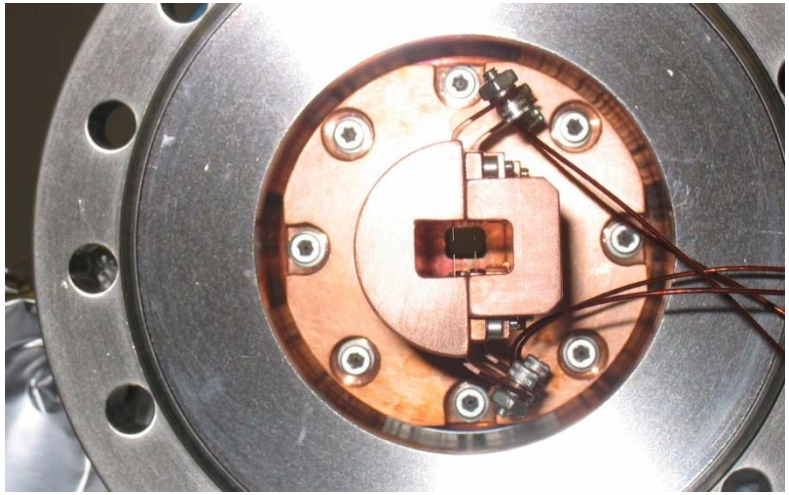

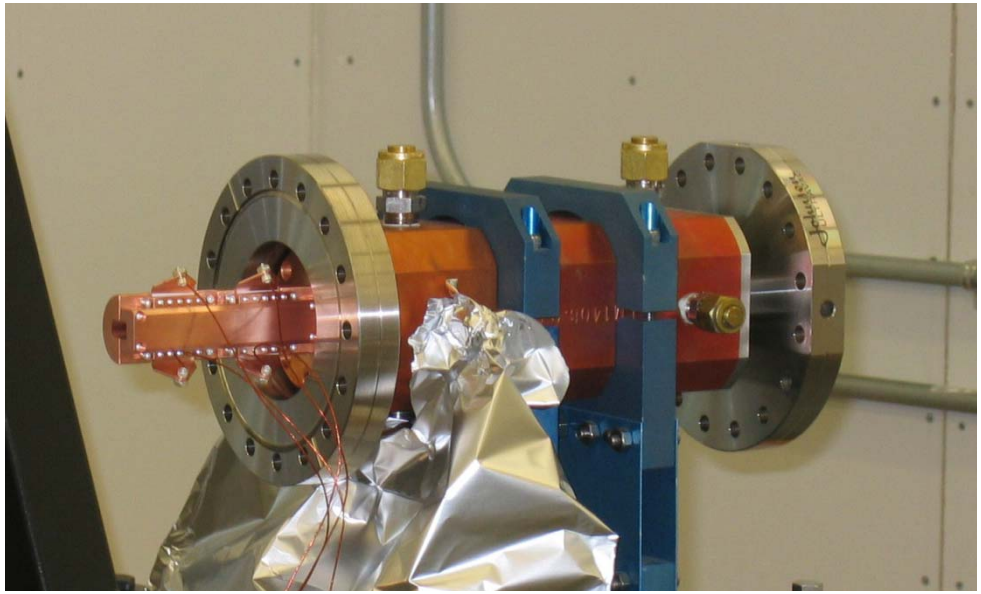

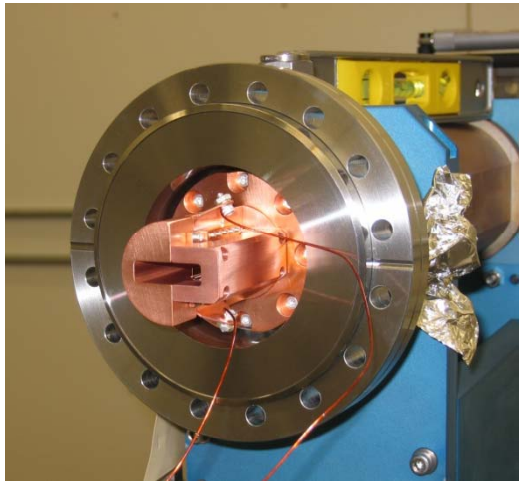

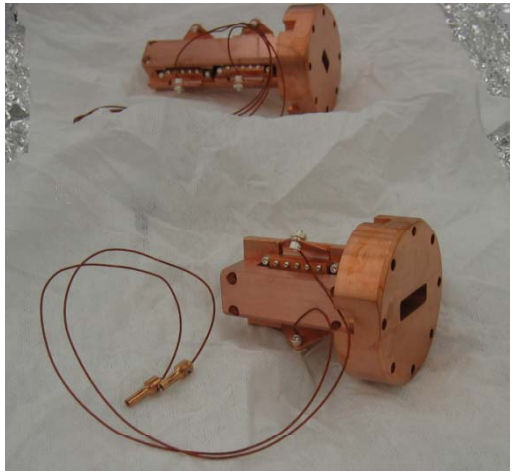

APS Work Project for NSRRC Taiwan Photon Source (TPS) XBPMs

In order to develop X-Ray Beam Position Monitor (XBPM) for the project of Taiwan Photon Source (TPS), a 3 GeV synchrotron radiation accelerator, NSRRC and APS have established a collaboration project to develop two XBPM prototypes together, one for TPS insertion devises (ID) beamline and one for TPS bending magnet (BM) beamlines. The design requirements of the XBPM prototypes include: high monitor spatial resolution and mechanical structure stability with high thermal load condition.

Cooperated with Spring-8, the TPS ID XBPM prototype has been installed inside the Spring-8 ID Front End of BL12XU for performance test. The TPS BM XBPM prototype has been installed in TLS Superconducting Wiggler (SW) front end for testing with beam conditions similar to the TPS BM beamlines.

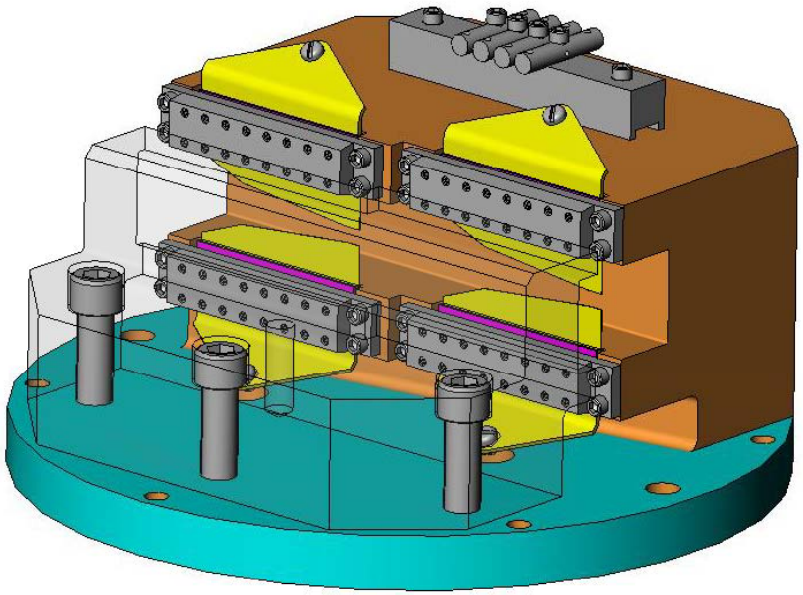

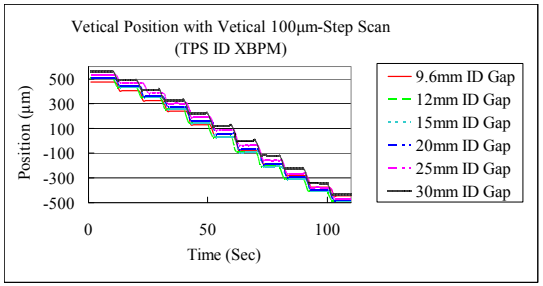

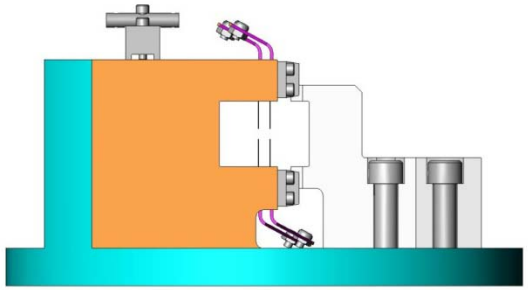

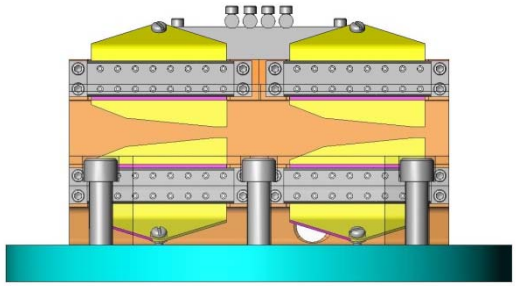

Photoemission Diamond-Based X-ray Beam Profiler

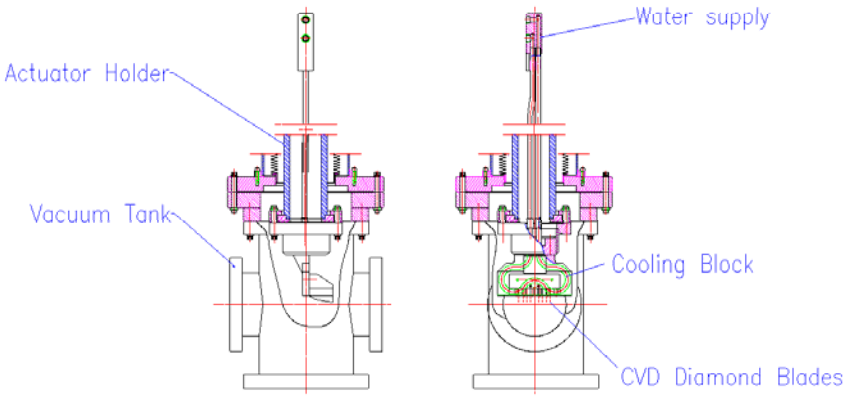

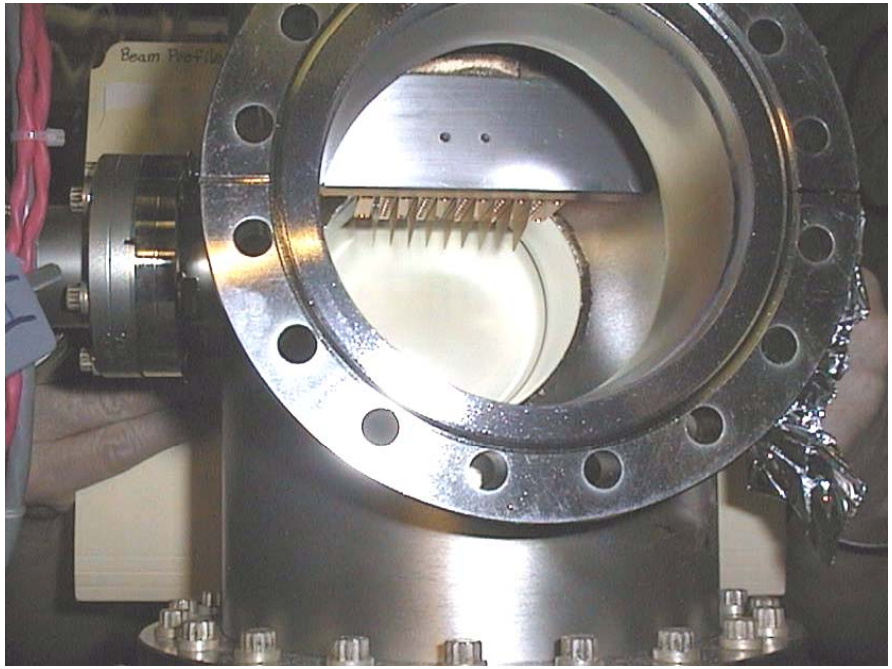

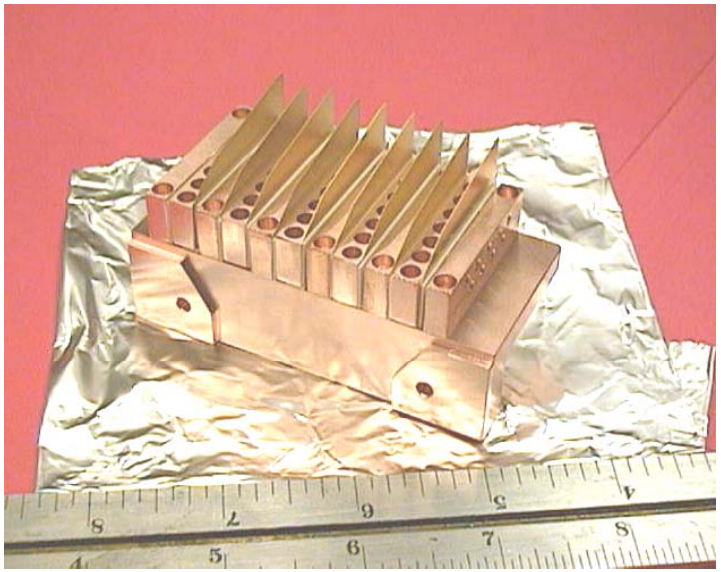

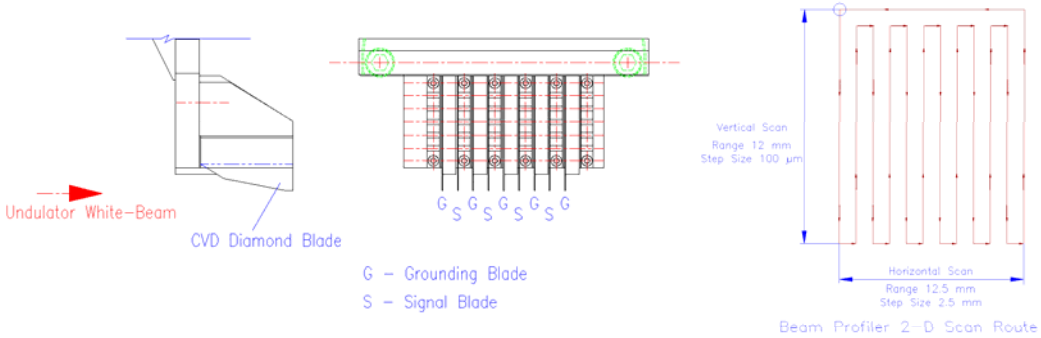

Photoconductive Diamond-Based XBPM R & D at the APS (1996)

Collaborated with ESRF and tested at ESRF

A novel X-ray beam position detection device that we call a position sensitive photoconductive detector (PSPCD) is designed to have synthetic diamond as its substrate material. It was experimentally proven that it is feasible to use synthetic diamond to make a hard X-ray position sensitive detector based on the photoconductivity principle and that acts as a solid-state ion chamber.

SYNTHETIC DIAMOND-BASED POSITION-SENSITIVE PHOTOCONDUCTIVE DETECTOR DEVELOPMENT FOR THE ADVANCED PHOTON SOURCE

Deming Shu, Tunch M. Kuzay, Yue Fang, Juan Barraza, and Tim Cundiff

Experimental Facilities Division, Advanced Photon Source
Argonne National Laboratory
Argonne, Illinois 60439, U. S. A.

Acknowledgements

Dean Haeffner, George Srajer, Michel Lehmuller, and Roger Ranay
APS, Argonne National Laboratory, U.S.A.
And
Graham Naylor and Pascal Elleaume
ESRF, France

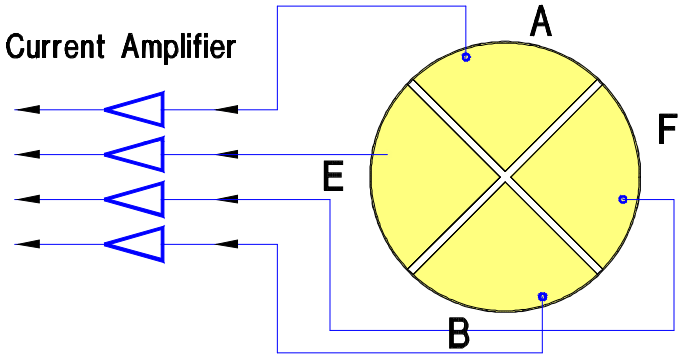

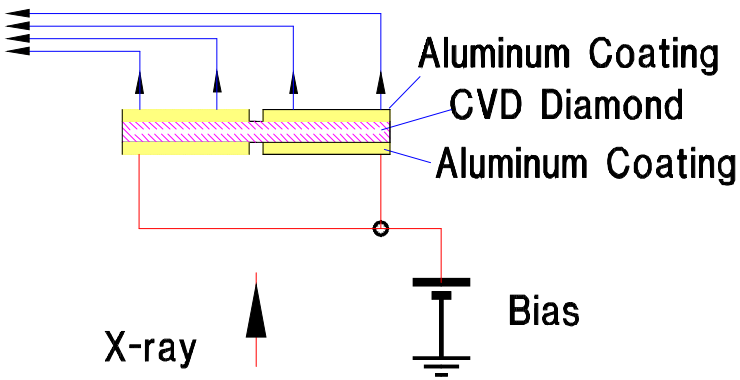

PSPCD as X-ray-transmitting Beam Position Monitor R&D (1996)

- *X-ray-transmitting beam position monitor design*
- *Tests of the APS PSPCD XBPM at ESRF*
- *PSPCD XBPM in APS commissioning windows*
- *PSPCD XBPM tests with monochromatic x-ray beams*

Photoconductive Diamond-Based XBPM R & D at the APS (1998)

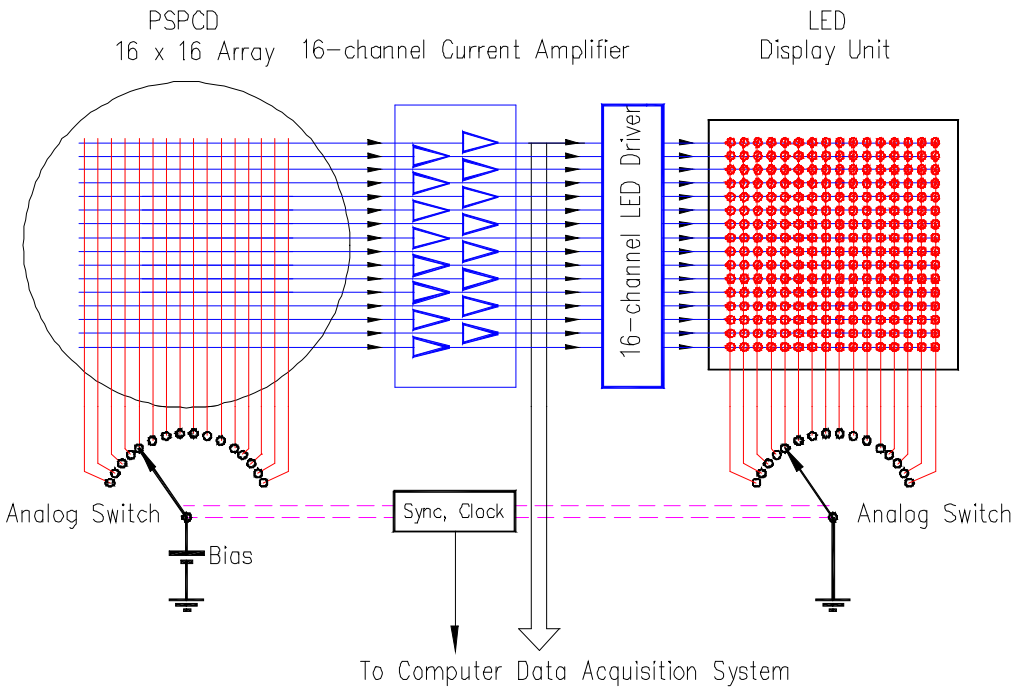

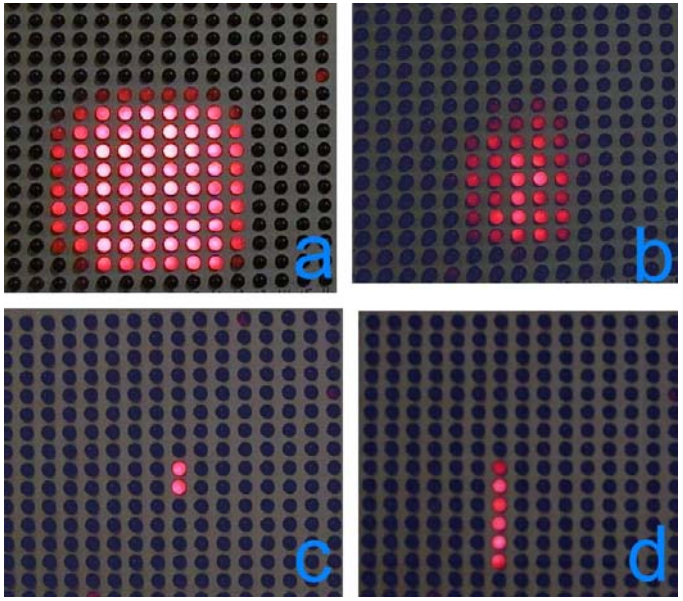

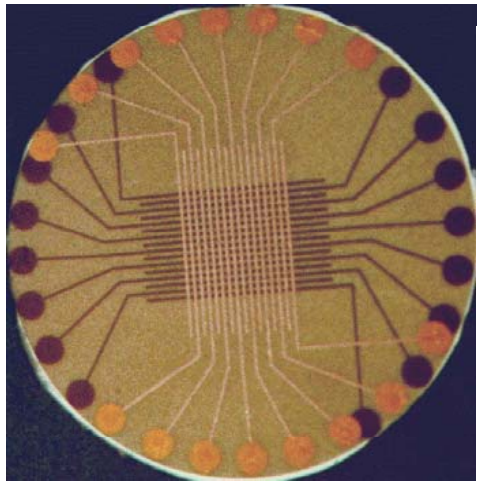

A prototype of a 2-D imaging PSPCD has been built at the APS. As shown in the figure, sixteen aluminum strips are coated on both sides of the CVD-diamond disk creating a 16 x 16 pixel two-dimensional array with a 175 µm x 175 µm pixel size. The CVD-diamond disk was mounted on a water-cooled base with a couple of ceramic connector-interface disks. Preliminary tests proved that a 2-D hard x-ray beam profile image could be read out by a multichannel current amplifier with pulsed bias electronics.

Technical challenges

- *Insulating type (type IIa) synthetic diamonds substrate quality control*
- *On chip integrated pre-amplifier and switching circuit design*

Acknowledgments

Argonne National Laboratory:

G. Decker, O. Singh, M. Hahne, M. Ramanathan, R. Raney ...

and Colleaques at CHESS, NSLS, ESRF, CLS, NSRRC, and SPring-8

This work is supported by the U.S. Department of Energy, Office of Science, Office of Basic Energy Sciences under Contract No. DE-AC02-06CH11357.

References

D. Shu and T.M. Kuzay General Layout Design for the Advanced Photon Source Beamline Front Ends, Nucl. Instr. and Meth. A347 (1994) 584-590

D. Shu, M. Ramanathan, and T. M, Kuzay, General Design of the Layout for New Undulator-Only Beamline Front Ends, to be published on the Proceedings of 7th International Conference on Synchrotron Radiation Instrumentation, August 21- 25, 2000, Berlin, Germany

D. Shu, B. Rodricks, J. Barraza, T. Sanchez, T. M. Kuzay, The APS X-ray Undulator Photon Beam Position Monitor and Tests at CHESS and NSLS, Nucl. Instr. and Meth. A319 (1992) 56-62

D. Shu, T. M. Kuzay, Y. Fang, J. Barraza, and T. Cundiff, Synthetic Diamond-Based Position-Sensitive Photoconductive Detector Development for the Advanced Photon Source, Journal of Synchrotron Radiation, (1998), 5, 636-638

D. Shu, H. Ding, J. Barraza, T. M. Kuzay, and M. Ramanathan, Smart X-ray Beam Position Monitor System Using Artificial Intelligence Methods for Advanced Photon Source Insertion-Device Beamlines, Journal of Synchrotron Radiation, (1998), 5, 632-635

G. Decker, O. Singh, H. Friedsam, J. Jones, M. Ramanathan, and D. Shu, Reduction of X-BPM Systematic Errors by Modification of Lattice in the APS Storage Ring, Proceedings of the 1999 Partical Accelerator Conference, New York, v.3, 2051-2053, 1999

D. Shu, J. Barraza, H. Ding, T. M. Kuzay, and M. Ramanathan, Progress of the APS High Heat Load X-ray Beam Position Monitor Development, Synchrotron Radiation Instrumentation: Tenth U.S. National Conference, ed. E. Fontes (American Institute of Physics, 1997, pp. 173-177