Development of High Stability BPM Support Stands

X-BPM Mini-Workshop

February 26 and 27, 2009

B. Kosciuk
S. Sharma
V. Ravindranath

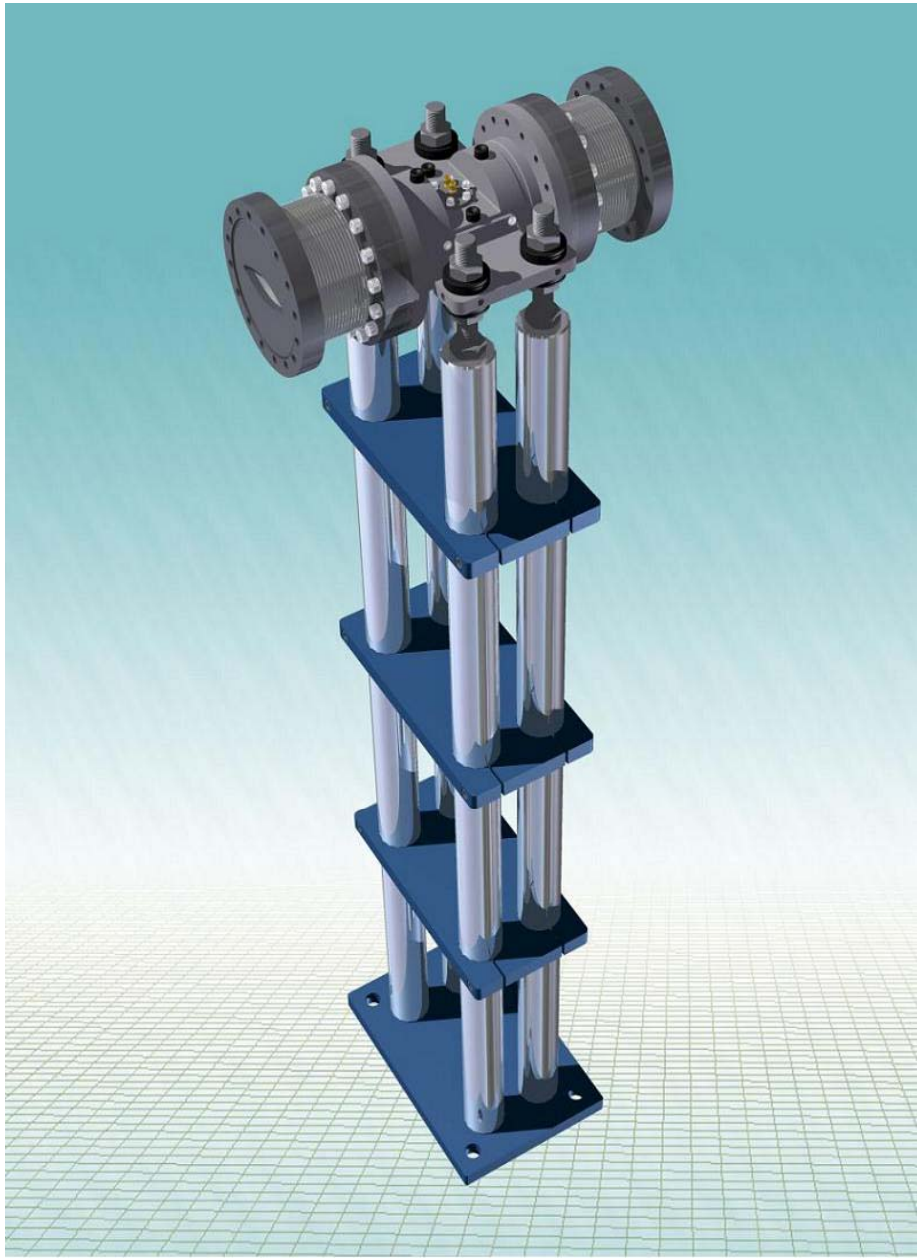

Office of Science
U.S. DEPARTMENT OF ENERGY
NSLS-II
NATIONAL SYNCHROTRON LIGHT SOURCE II
BROOKHAVEN NATIONAL LABORATORY

Stability Requirements for High Stability BPM Stand

- NSLS-II Baseline requirement, beam motion not to exceed 10% of beam size.

- Most stringent requirement occurs in short straight section where σ_x= 40μm, σ_y= 3μm

Thermal Stability Requirements

Vertical	± 0.10μm (100nm)
Horizontal	± 0.25μm (250nm)
Longitudinal	± 10μm

Vibrational Stability Requirements

- Structure must have natural frequencies, ω_n greater than 30 Hz to minimize amplification of ground motion.

Carbon Fiber Conceptual Design

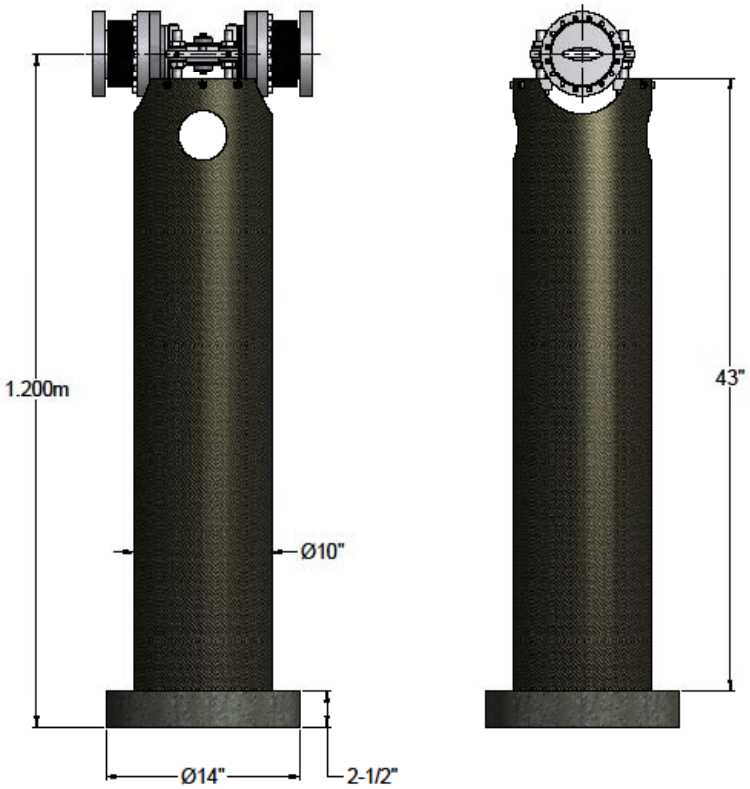

Carbon-Fiber Tube
Performance Specifications:

CTE: 0.1 ppm/°C
E (transverse) : 10 Gpa

First Article Performance
(validated at BNL):

CTE: 3 ppm/°C
E (transverse) : 4 Gpa

Vendors were not willing or able to certify the samples.

Cost ranged from $1,200 to over $10,000 per tube.

HS-BPM Stand Design Concept

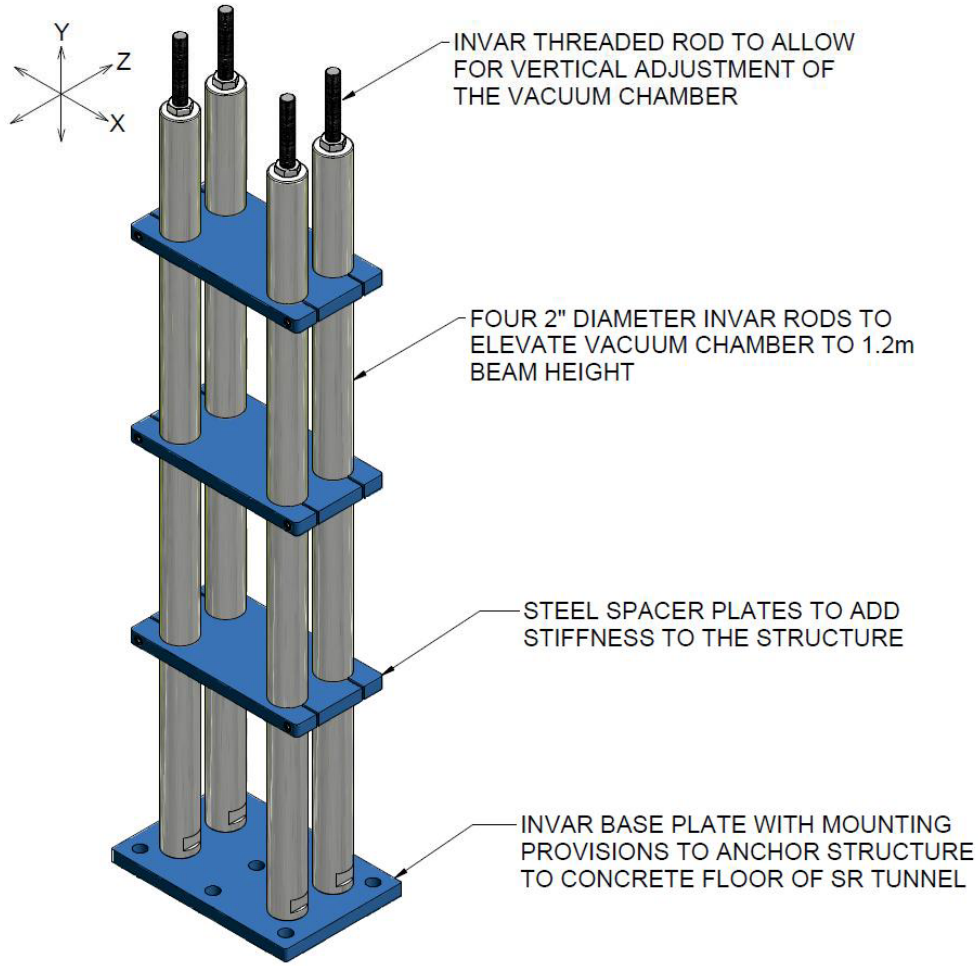

Invar-36 Properties

Invar-36 is an iron/nickel alloy known for it's thermal stability.

It also has a very low thermal diffusivity, 5X lower than steel, 28X lower than aluminum, making it slow to respond to temperature changes.

Mechanical properties include a fairly stiff Young's Modulus of 148 Gpa making it attractive from a vibrational standpoint.

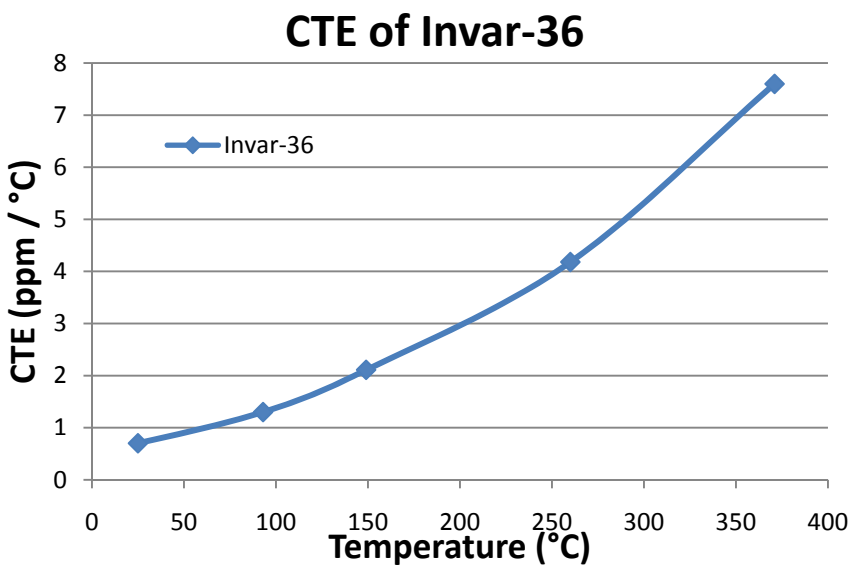

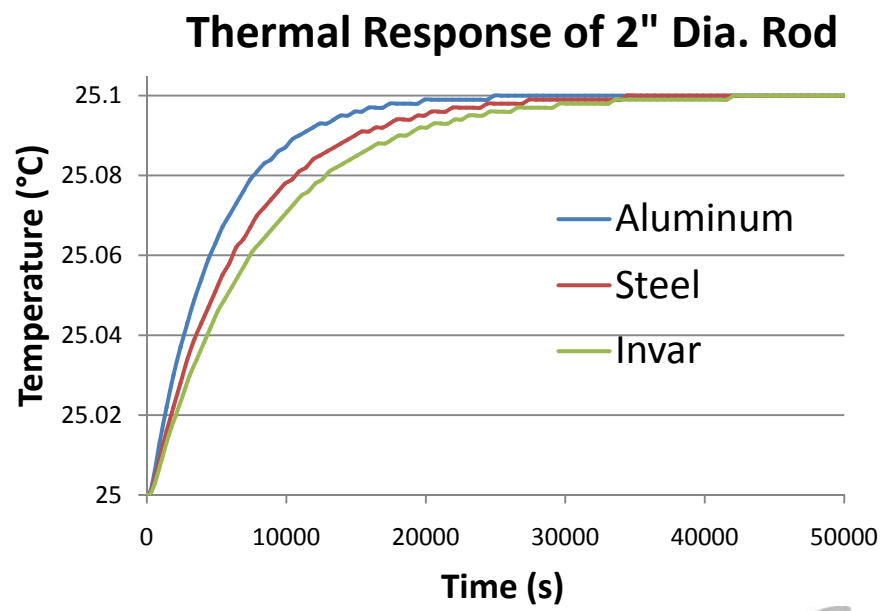

Office of Science
U.S. DEPARTMENT OF ENERGY

NSLS-II
NATIONAL SYNCHROTRON LIGHT SOURCE II

BROOKHAVEN
NATIONAL LABORATORY

Expected Storage Ring Tunnel Conditions

- Ambient Air Temperature: 25.5 ± 0.1 °C, ω = 1 hr
- Floor Temperature: (?) 25.5 ± 0.1 °C, ω = 24 hr
- RMS Motion of SR Floor: 25nm (4-100 Hz)

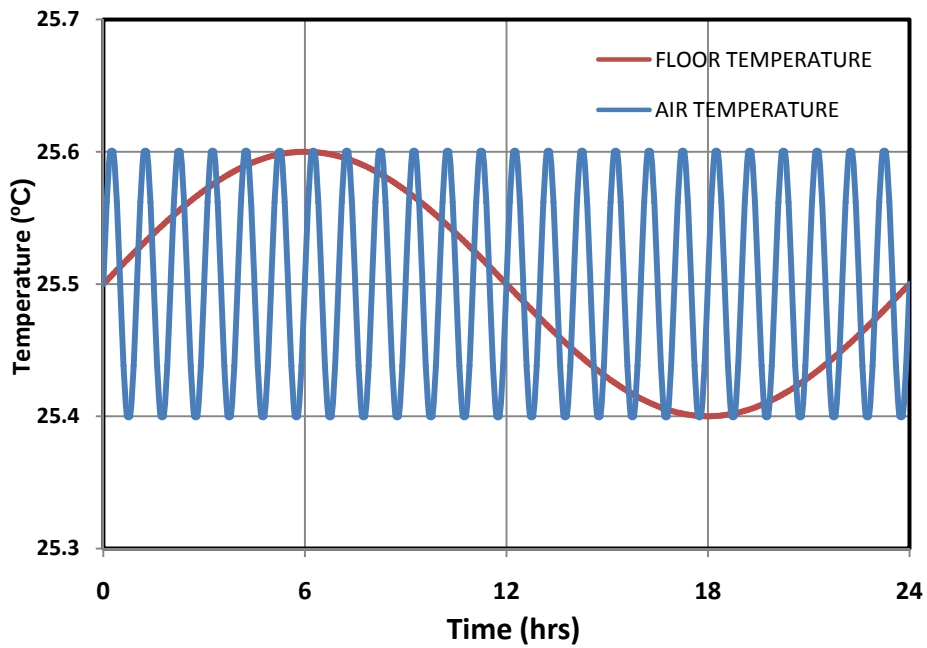

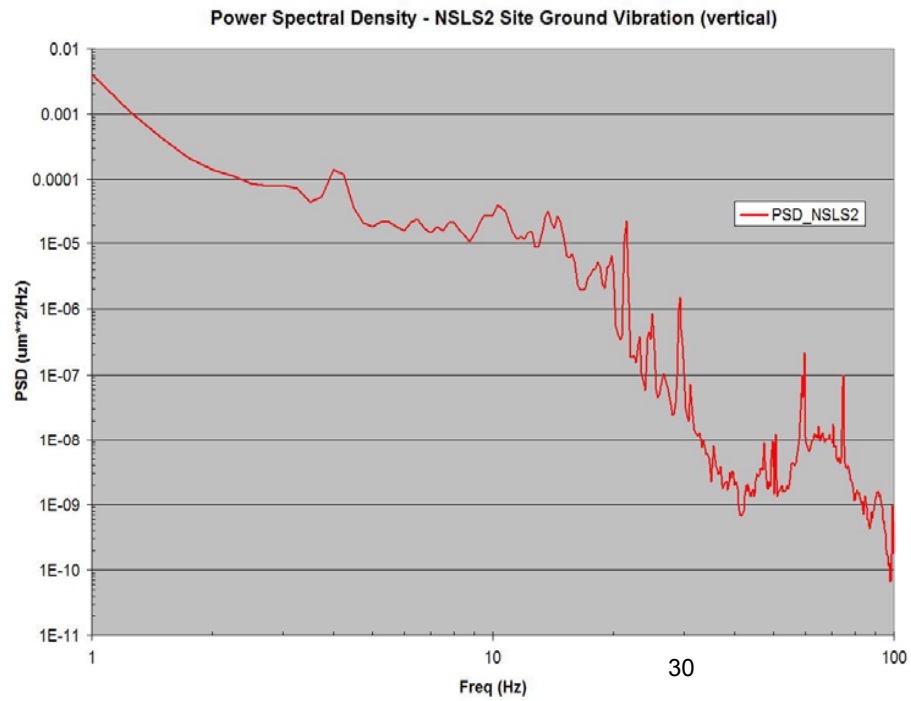

Office of Science
U.S. DEPARTMENT OF ENERGY

NSLS-II
NATIONAL SYNCHROTRON LIGHT SOURCE II

BROOKHAVEN
NATIONAL LABORATORY

Finite Element Analysis

Invar-36 Properties:

Young's Modulus (E) = 148 GPa
Thermal Expansion Coefficient = 1.0 μm/m-°C @ 25 °C
Thermal Conductivity (k) = 10.15 W/m-K
Density (ρ) = 8,050 kg/m^3
Specific Heat (C_p) = 515 J/kg-°C
Diffusivity (α) = $k/\rho C_p$ = 2.45 x 10^{-6} m^2/s

Simulation: Transient Thermal Analysis
24 hr duration
Max time step: 100sec

Boundary Conditions:
Convection = 7 Watts/m^2-°C
Ambient Air Temperature = 25 +/-0.1°C (ω=1hr)
Floor Temperature = 25°C +/-0.1°C (ω=24hr)

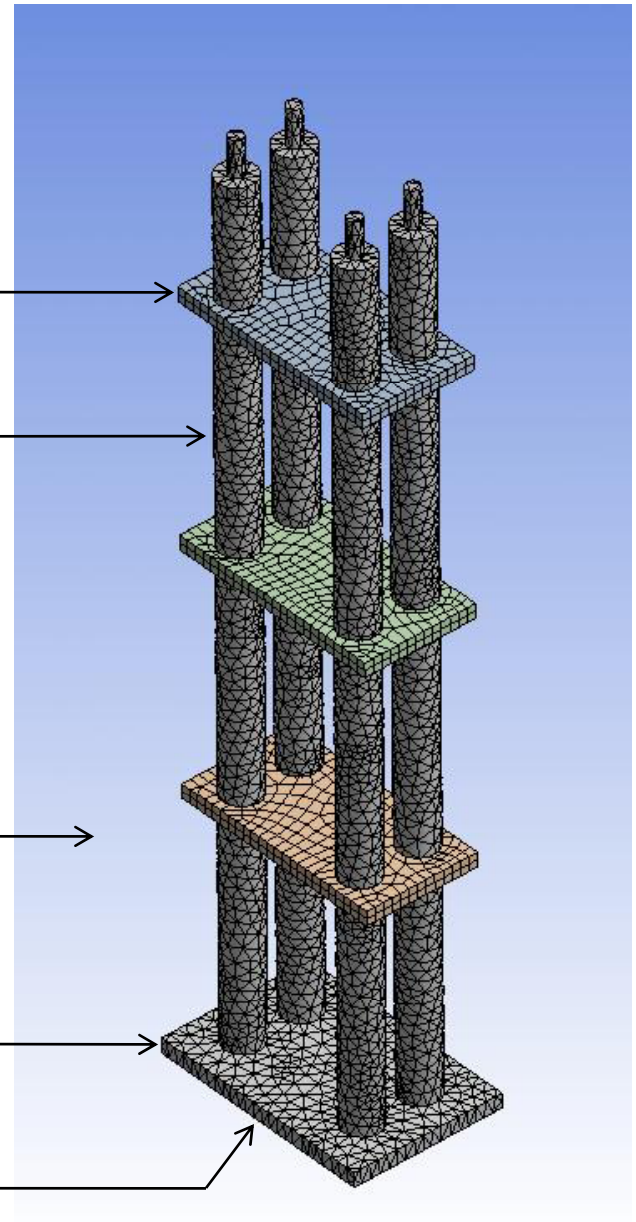

FEA Transient Thermal Simulation Results

Temp. Dist. @ t = 6.5hrs

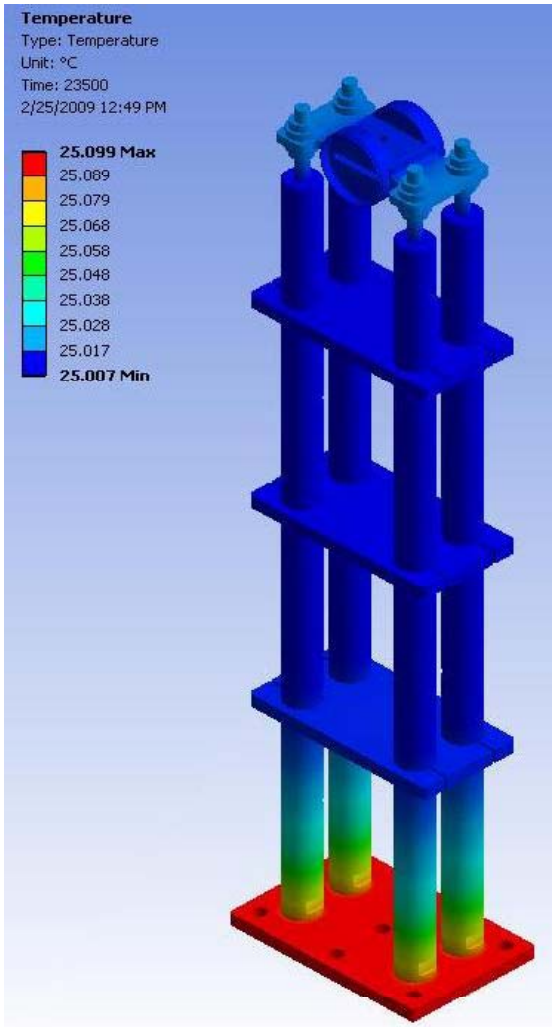

Convective condition results in maximum 0.015°C change in the top 90% of the structure.

Base plate temperature follows floor condition.

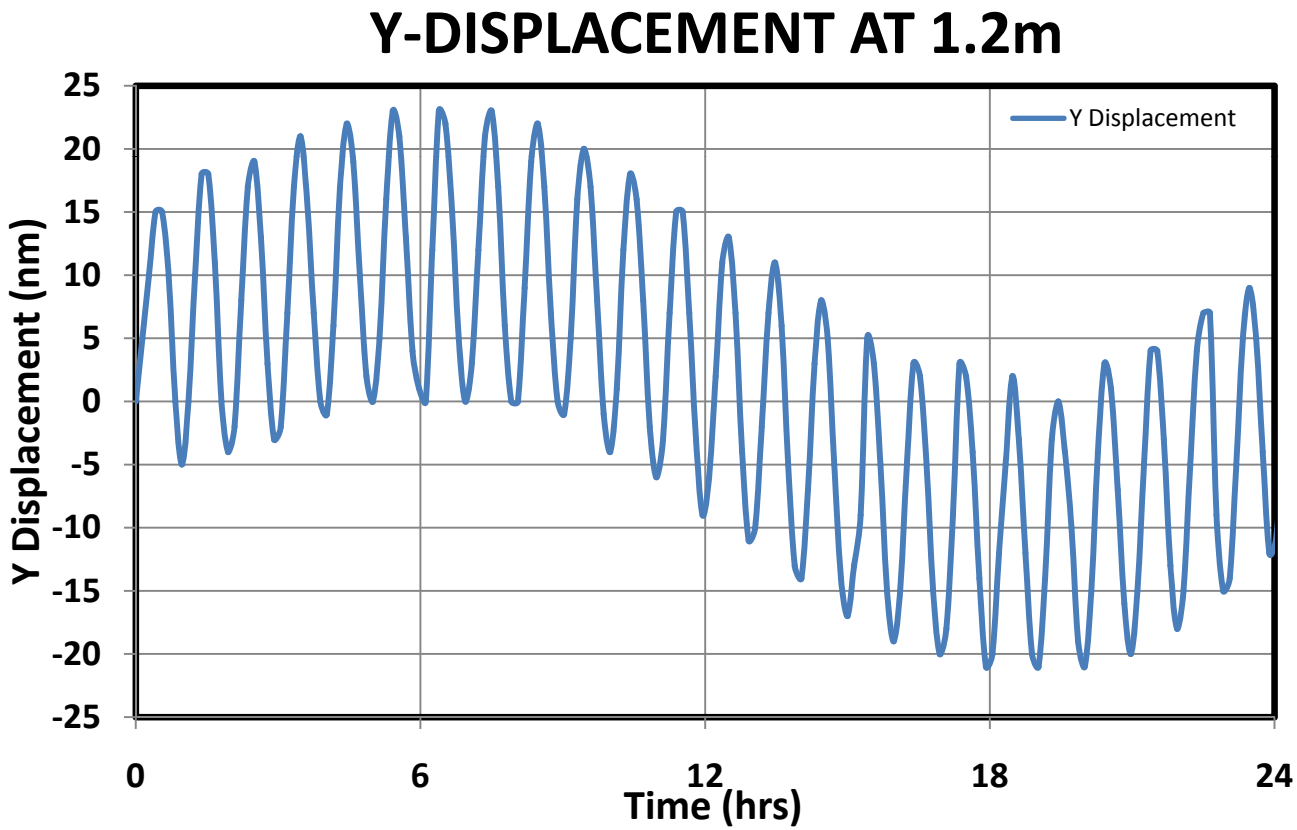

Office of Science
U.S. DEPARTMENT OF ENERGY

NSLS-II
NATIONAL SYNCHROTRON LIGHT SOURCE II

BROOKHAVEN
NATIONAL LABORATORY

Thermal Stability Test Configuration

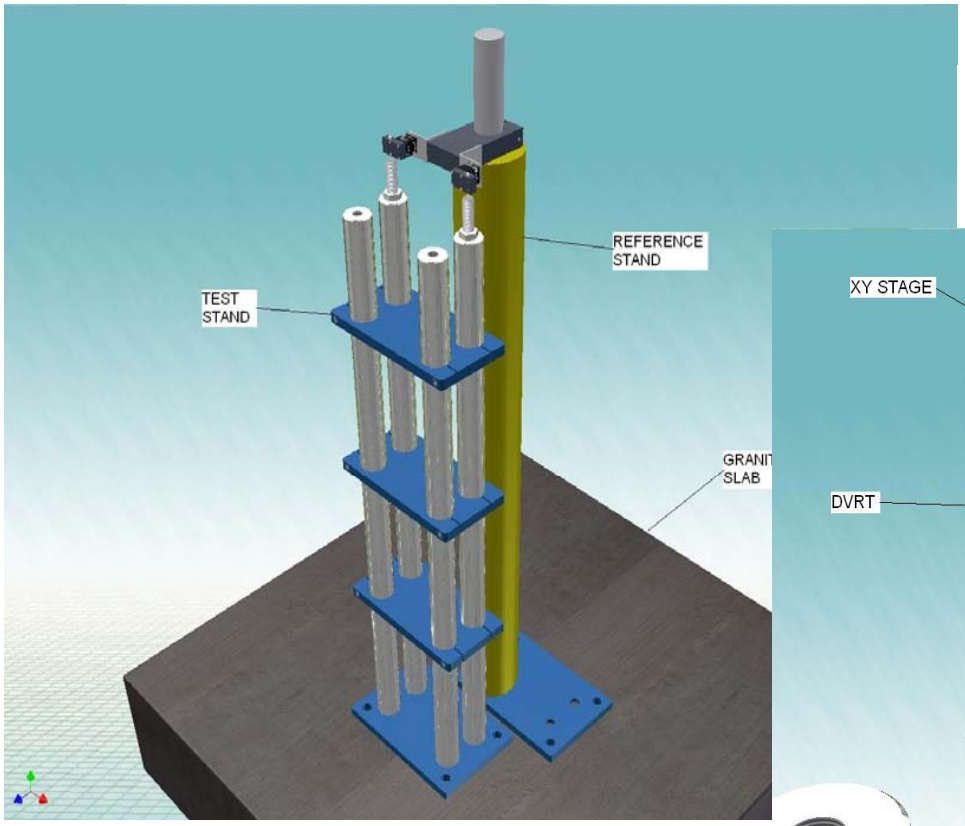

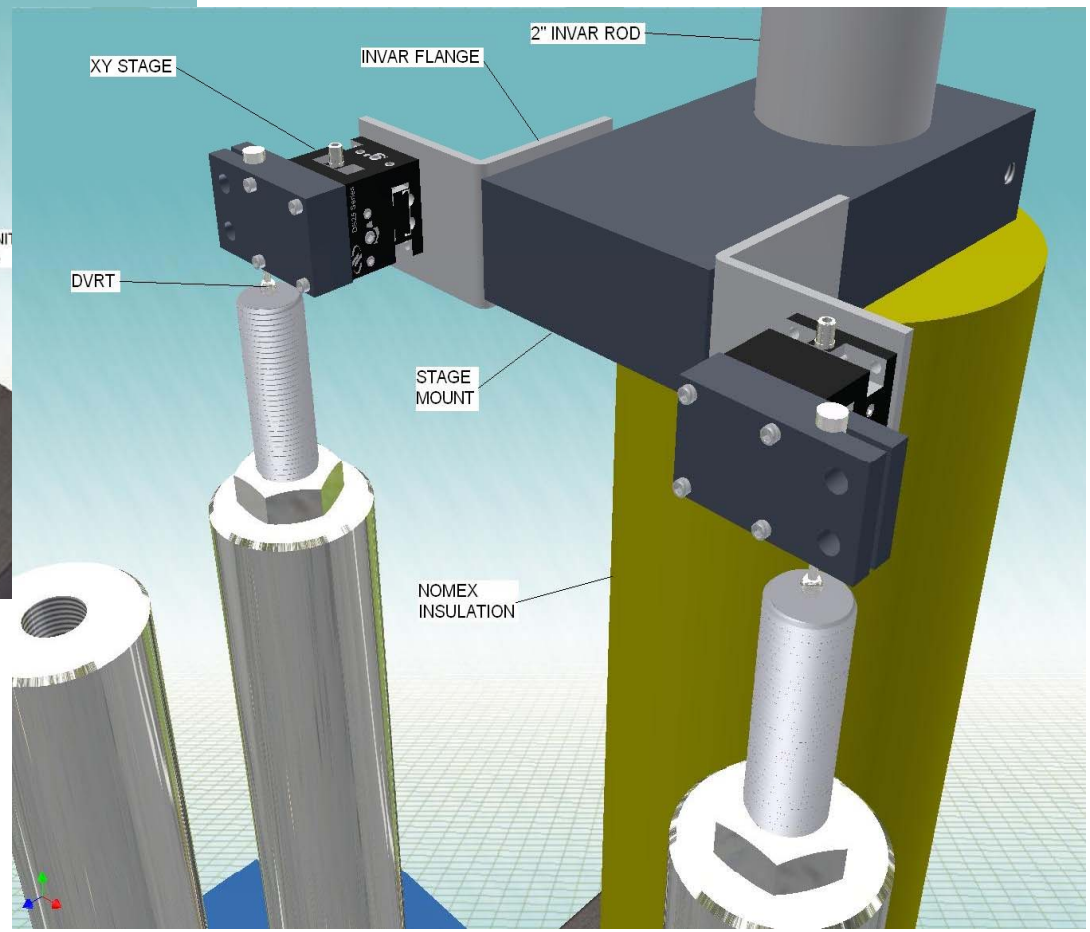

Laser Interferometer:
Range: up to 4m
Resolution: down to 1nm

Office of Science
U.S. DEPARTMENT OF ENERGY

NSLS-II
NATIONAL SYNCHROTRON LIGHT SOURCE II

BROOKHAVEN NATIONAL LABORATORY

Vibration Test Configuration

Equipment:
Accelerometers: Piezotronics 393B04
Data Acquisition: National Instruments PXI-1042Q
National Instruments PXI-4351

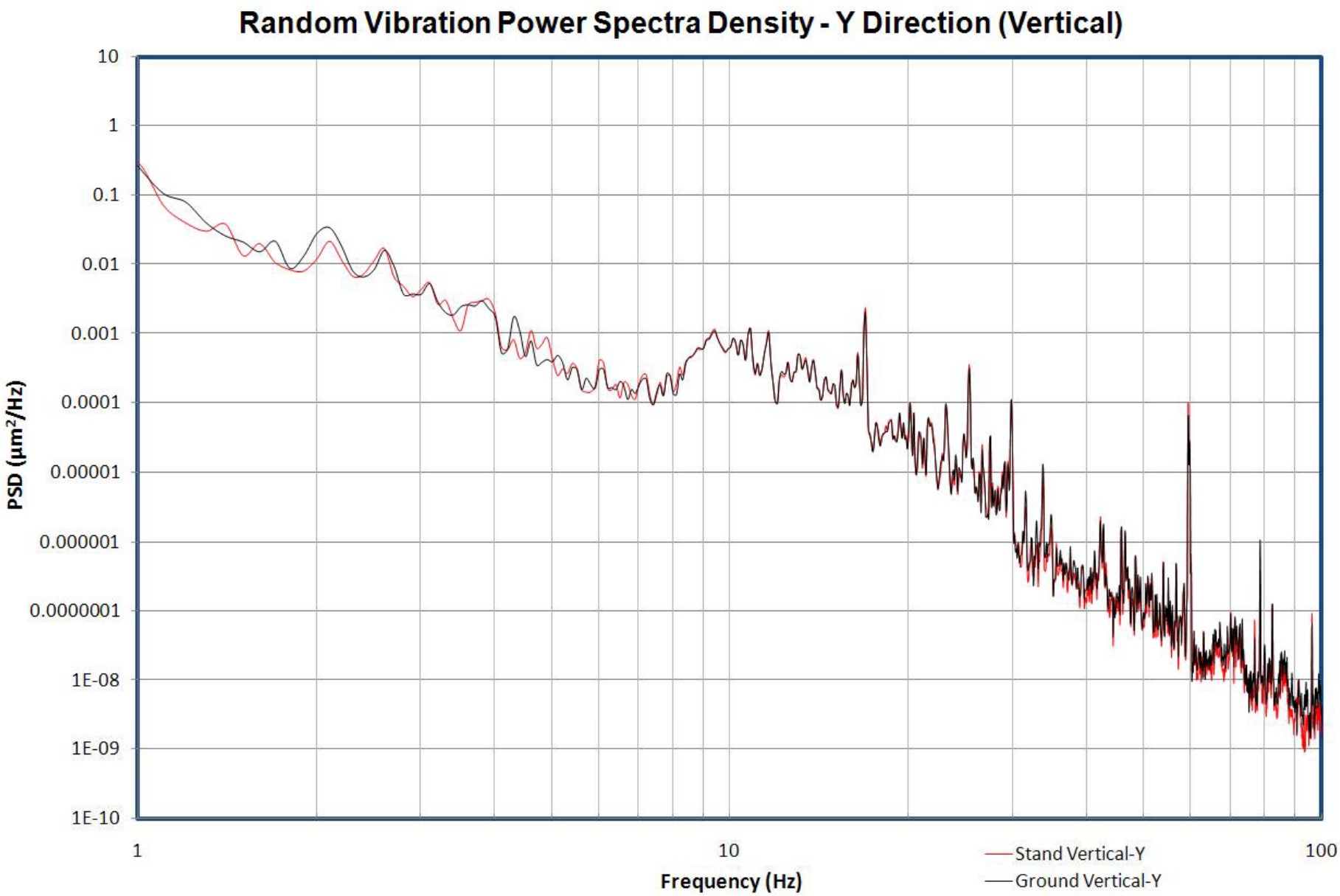

Office of Science
U.S. DEPARTMENT OF ENERGY

NSLS-II
NATIONAL SYNCHROTRON LIGHT SOURCE II

BROOKHAVEN
NATIONAL LABORATORY

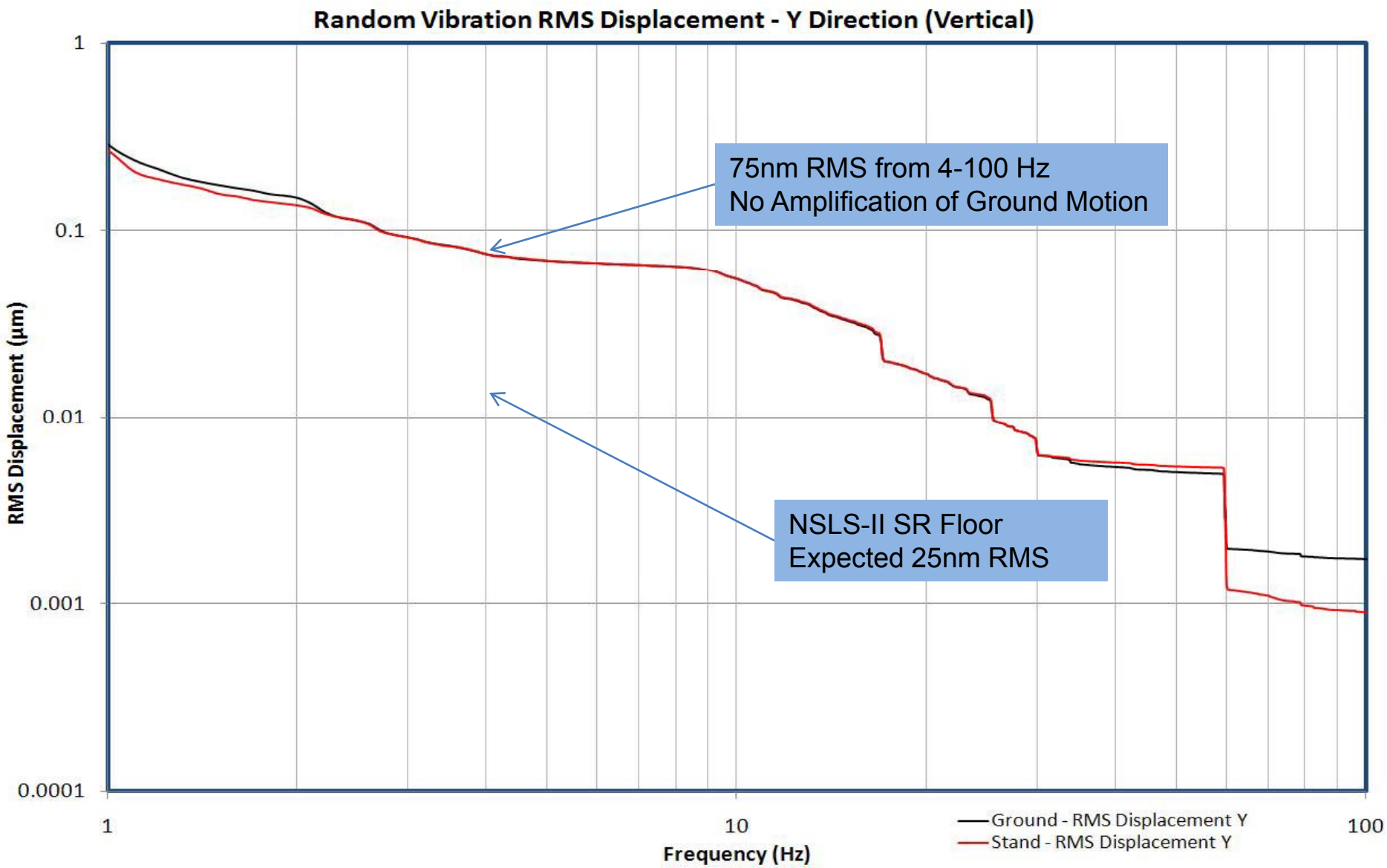

Office of Science
U.S. DEPARTMENT OF ENERGY

NSLS-II
NATIONAL SYNCHROTRON LIGHT SOURCE II

BROOKHAVEN
NATIONAL LABORATORY

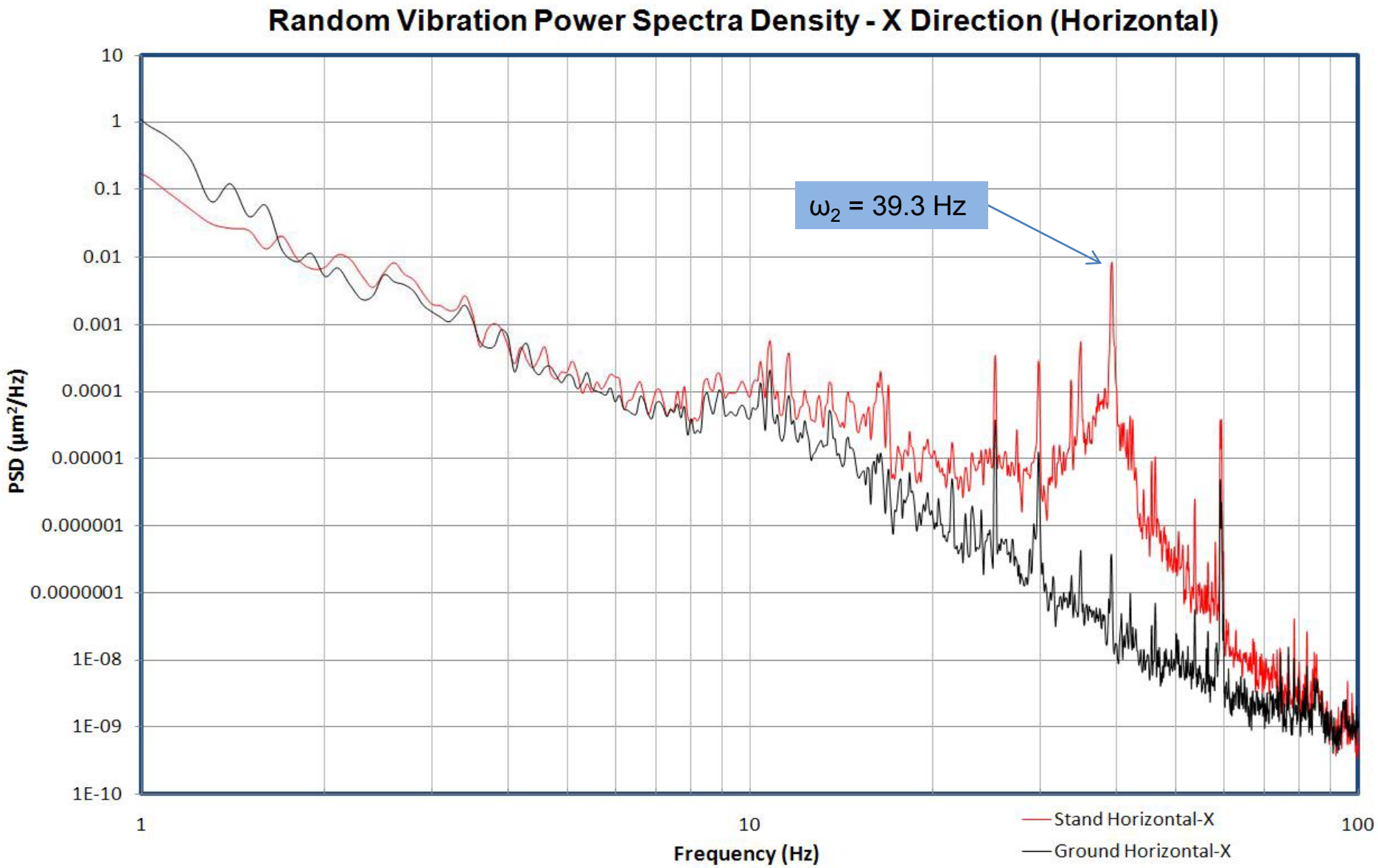

Office of Science
U.S. DEPARTMENT OF ENERGY

NSLS-II
NATIONAL SYNCHROTRON LIGHT SOURCE II

BROOKHAVEN
NATIONAL LABORATORY

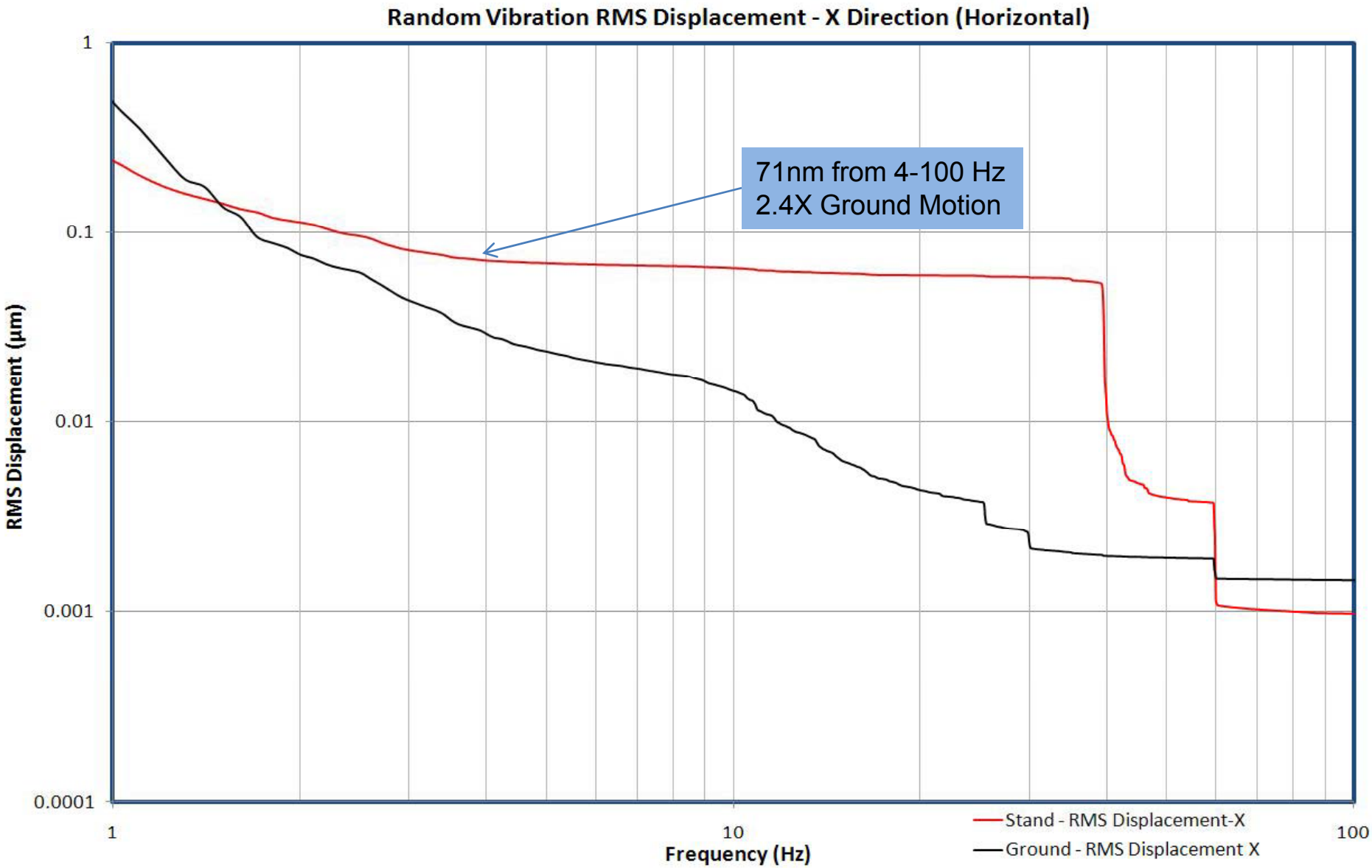

Office of Science
U.S. DEPARTMENT OF ENERGY

NSLS-II
NATIONAL SYNCHROTRON LIGHT SOURCE II

BROOKHAVEN
NATIONAL LABORATORY

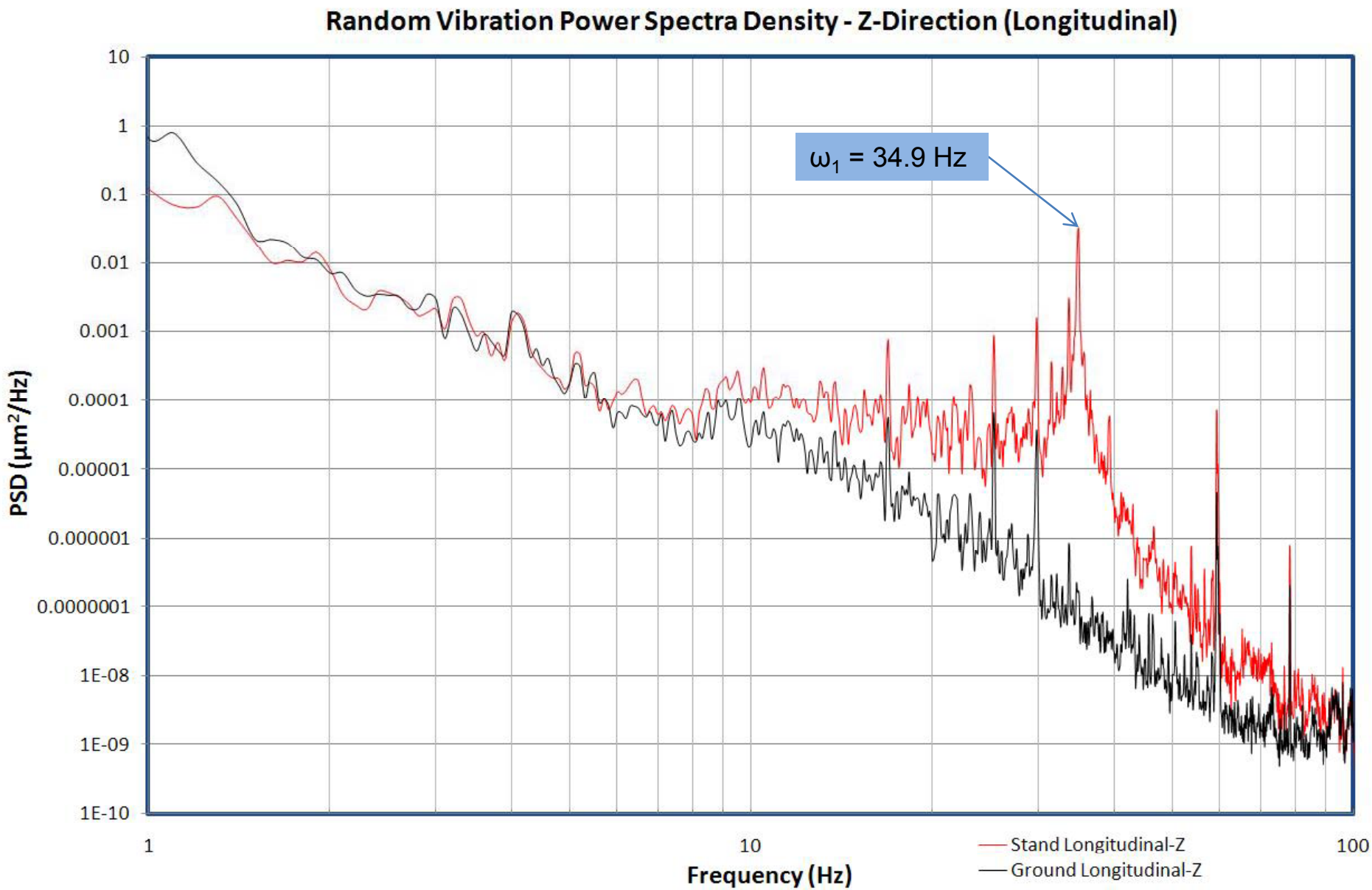

Office of Science
U.S. DEPARTMENT OF ENERGY

NSLS-II
NATIONAL SYNCHROTRON LIGHT SOURCE II

BROOKHAVEN
NATIONAL LABORATORY

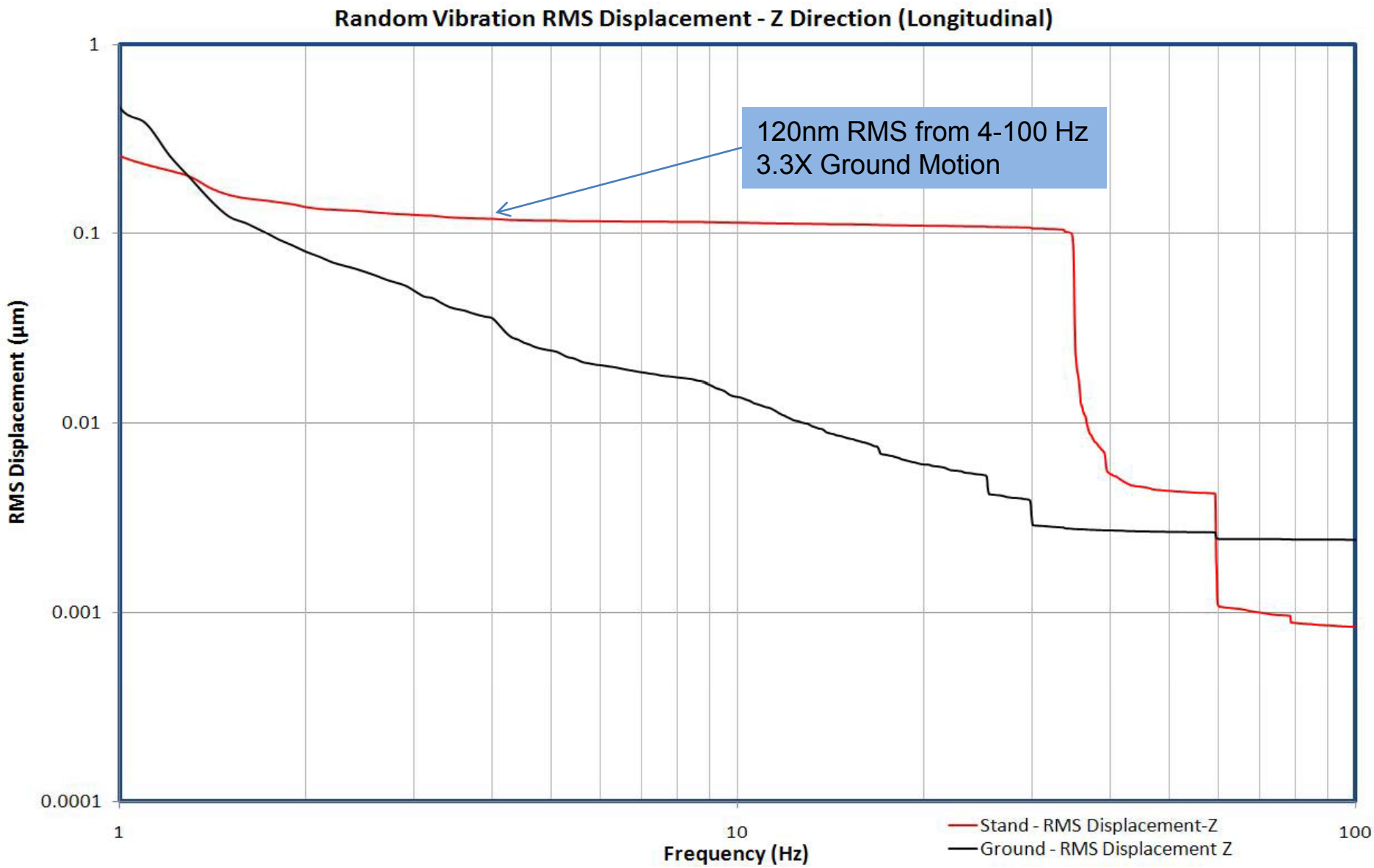

Office of Science
U.S. DEPARTMENT OF ENERGY

NSLS-II
NATIONAL SYNCHROTRON LIGHT SOURCE II

BROOKHAVEN
NATIONAL LABORATORY

Vibration Test Conclusions

Direction	Stability Req.	Stand RMS Motion (on 902 Floor)	Stand RMS Motion (on NSLS-II Floor)*	f_1	Amplification
Y	100 nm	75 nm	25 nm	N/A	1X
X	250 nm	71 nm	60 nm	39.3 Hz	2.4X
Z	10,000 nm	120 nm	83 nm	34.9 Hz	3.3X

* Based on estimated 25nm RMS motion in X, Y and Z in storage ring tunnel.