Date (mmm dd yyyy)	Issued For	Rev.
09-21-2007	TITLE 1 60% REVIEW	A
10-24-2007	TITLE 1 100% COMPLETE	B
07-31-2008	TITLE II DESIGN 90% REVIEW SUBMITTAL	E
08-25-2008	TITLE II DESIGN 100% OWNER REVIEW	F
02-19-2009	TITLE II CONSTRUCTION BID ISSUE	0

UL/cUL SYSTEM NO. C-AJ-8041

F RATING = 3-HR. T RATING = 0 AND 1 HR.
L RATING AT AMBIENT – 10 CFM/SQ FT
L RATING AT 400 F – LESS THAN 6 CFM/SQ FT

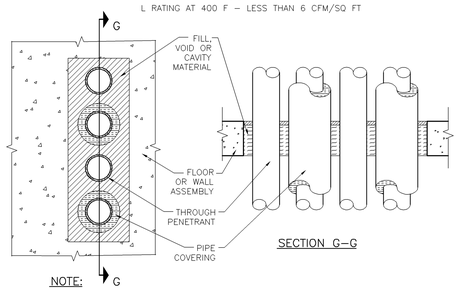

SECTION G–G

NOTE:

1. FLOOR OR WALL ASSEMBLY – MIN 4–1/2 IN. THICK REINFORCED LIGHTWEIGHT OR NORMAL WEIGHT (100–150PCF) CONCRETE FLOOR OR MIN 5 IN. THICK REINFORCED LIGHTWEIGHT OR NORMAL WEIGHT (100–150 PCF) CONCRETE WALL. WALL MAY ALSO ANY UL CLASSIFIED BE CONSTRUCTED OF MAX AREA OF CONCRETE BLOCKS*. OPENING IS 192 SQ IN. WITH MAX DIMENSION OF 24 IN. CONCRETE BLOCKS SEE (CAZT) CATEGORY IN THE FIRE RESISTANCE DIRECTORY FOR NAMES OF MANUFACTURERS.
2. THROUGH PENETRANTS–A MAX OF 4 PIPES, CONDUITS OR TUBING TO BE INSTALLED WITHIN THE OPENING. THE SPACE BETWEEN PIPES, CONDUITS OR TUBING SHALL BE 1–1/2 IN. THE SPACE BETWEEN PIPES, CONDUITS OR TUBING AND PERIPHERY OF OPENING SHALL BE MIN 1–5/8 IN. TO MAX 2–1/2 IN. PIPE, CONDUIT OR TUBING TO BE RIGIDLY SUPPORTED ON BOTH SIDES OF FLOOR OR WALL ASSEMBLY. THE FOLLOWING TYPES AND SIZES OF METALLIC PIPES, CONDUITS OR TUBING MAY BE USED:
   A. STEEL PIPE–NOM 3 IN. DIAM (OR SMALLER) SCHEDULE 10(ORHEAVIER) STEEL PIPE.
   B. COPPER TUBING–COPPER TUBING NOM 3 IN. DIAM (OR SMALLER) TYPE L (OR HEAVIER)
   C. COPPER PIPE – NOM 3 IN. DIAM (OR SMALLER) REGULAR (OR HEAVIER) COPPER PIPE.
   D. CONDUIT–NOM 3 IN. DIAM (OR SMALLER) ELECTRICAL METALLIC TUBING OR STEEL CONDUIT.
3. PIPE COVERING* (OPTIONAL)–MAX 1 IN. THICK HOLLOW CYLINDRICAL HEAVY –DENSITY (MIN 3.5 PCF) GLASS FIBER UNITS JACKETED ON THE OUTSIDE WITH AN ALL SERVICE JACKET. LONGITUDINAL JOINTS SEALED WITH METALFASTENERS OR FACTORY–APPLIED SELF–SEALING LAP TAPE. TRANSVERSE JOINTS SECURED WITH METAL FASTENERS OR WITH BUTT STRIP TAPE SUPPLIED WITH THE PRODUCT. A NOM ANNULAR SPACE OF 1–1/2 IN. IS REQUIRED WITHIN THE FIRESTOP SYSTEM. THE T RATING IS 1 HR WHEN 1 IN. THICK PIPE COVERING IS USED. THE T RATING IS 0 HR. WHEN PIPE COVERING IS LESS THAN 1 IN. OR IS OMITTED.
   SEE PIPE AND EQUIPMENT COVERING – MATERIALS (BRGU) CATEGORY IN THE BUILDING MATERIALS DIRECTORY FOR NAMES OF MANUFACTURERS. ANY PIPE COVERING MATERIAL MEETING THE ABOVE SPECIFICATIONS AND BEARING THE UL CLASSIFICATION MARKING WITH A FLAME SPREAD INDEX OF 25 OR LESS AND A SMOKE DEVELOPED INDEX OF 50 OR LESS MAY BE USED.
4. PACKING MATERIAL–MIN 4 IN. THICKNESS OF MIN 4.0 PCF MINERAL WOOL BATT INSULATION FIRMLY PACKED INTO OPENING AS A PERMANENT FORM. PACKING MATERIAL TO BE RECESSED FROM TOP SURFACE OF FLOOR OR FROM BOTH SURFACES OF WALL AS REQUIRED TO ACCOMMODATE THE REQUIRED THICKNESS OF FILL MATERIAL.
5. FILL, VOID OR CAVITY MATERIAL*–SEALANT–MIN 1/2 IN. THICKNESS OF FILL MATERIAL APPLIED WITHIN THE ANNULUS, FLUSH WITH TOP SURFACE OF FLOOR OR WITH BOTH SURFACES OF WALL.
   HILTI CONSTRUCTION CHEMICALS, INC. – FS–ONE SEALANT
   – CP 606 SILICONE FREE FLEXIBLE FIRESTOP SEALANT

*BEARING THE UL CLASSIFICATION MARKING

NOTE: ELECTRICAL ROOM WALL AND FLOOR ONLY

MULTIPLE INSULATED/NON–INSULATED METAL PIPES THROUGH UP TO 3–HR. CONCRETE FLOOR/WALL OR BLOCK WALL

500J TYP NO SCALE

UL/cUL SYSTEM NO. C-AJ-1226

F RATING = 3-HR. T RATING = 0–HR.
L RATING AT AMBIENT – LESS THAN 1 CFM/SQ FT
L RATING AT 400 F – 4 CFM/SQ FT

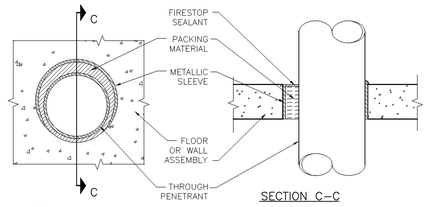

SECTION C–C

NOTE:

1. FLOOR OR WALL ASSEMBLY – MIN 4–1/2 IN. THICK REINFORCED LIGHTWEIGHT OR NORMAL WEIGHT (100–150 PCF) CONCRETE. WALL MAY ALSO BE CONSTRUCTED OF ANY UL CLASSIFIED CONCRETE BLOCKS*. MAX DIAM OF OPENING IS 32 IN. SEE CONCRETE BLOCKS (CAZT) CATEGORY IN THE FIRE RESISTANCE DIRECTORY FOR NAMES OF MANUFACTURERS.
2. METALLIC SLEEVE – (OPTIONAL) NOM 32 IN. DIAM (OR SMALLER) SCHEDULE 40 (OR HEAVIER) STEEL SLEEVE CAST OR GROUTED INTO FLOOR OR WALL ASSEMBLY, FLUSH WITH FLOOR OR WALL SURFACES.
3. THROUGH PENETRANT – ONE METALLIC PIPE OR CONDUIT TO BE INSTALLED EITHER CONCENTRICALLY OR ECCENTRICALLY WITHIN THE FIRESTOP SYSTEM. THE ANNULAR SPACE BETWEEN PIPE OR CONDUIT AND PERIPHERY OF OPENING SHALL BE MIN 0 IN. (POINT CONTACT) TO MAX 1–7/8 IN. PIPE OR CONDUIT TO BE RIGIDLY SUPPORTED ON BOTH SIDES OF FLOOR OR WALL ASSEMBLY. THE FOLLOWING TYPES AND SIZES OF METALLIC PIPES OR CONDUITS MAY BE USED:
   A. STEEL PIPE – NOM 30 IN. DIAM (OR SMALLER) SCHEDULE 10 (OR HEAVIER) STEEL PIPE.
   B. COPPER PIPE – NOM 6 IN. DIAM (OR SMALLER) REGULAR (OR HEAVIER) COPPER PIPE.
   C. COPPER TUBING – NOM 6 IN. DIAM (OR SMALLER) TYPE L (OR HEAVIER) COPPER TUBING.
   D. CONDUIT – NOM 6 IN. DIAM (OR SMALLER) STEEL CONDUIT.
   E. CONDUIT – NOM 4 IN. DIAM (OR SMALLER) STEEL ELECTRICAL METALLIC TUBING (EMT).
4. FIRESTOP SYSTEM – THE FIRESTOP SYSTEM SHALL CONSIST OF THE FOLLOWING:
   A. PACKING MATERIAL – MIN 4 IN. THICKNESS OF MIN 4 PCF MINERAL WOOL BATT INSULATION FIRMLY PACKED INTO OPENING AS A PERMANENT FORM. PACKING MATERIAL TO BE RECESSED FROM TOP SURFACE OF FLOOR OR FROM BOTH SURFACES OF WALL AS REQUIRED TO ACCOMMODATE THE REQUIRED THICKNESS OF FILL MATERIAL.
   B. FILL, VOID OR CAVITY MATERIAL* – SEALANT – MIN 1/4 IN. THICKNESS OF FILL MATERIAL APPLIED WITHIN THE ANNULUS, FLUSH WITH TOP SURFACE OF FLOOR OR WITH BOTH SURFACES OF WALL. AT THE POINT CONTACT LOCATION BETWEEN PIPE AND CONCRETE, A MIN 1/4 IN. DIAM BEAD OF FILL MATERIAL SHALL BE APPLIED AT THE CONCRETE/PIPE INTERFACE ON THE TOP SURFACE OF FLOOR AND ON BOTH SURFACES OF WALL.
   HILTI CONSTRUCTION CHEMICALS, INC. – FS–ONE SEALANT.

*BEARING THE UL CLASSIFICATION MARKING

NOTE: ELECTRICAL ROOM WALL AND FLOOR ONLY

METAL PIPE THROUGH A SLEEVE IN 3–HR. CONCRETE FLOOR/WALL OR BLOCK WALL

500F TYP NO SCALE

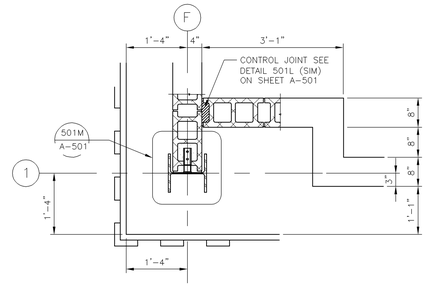

500A CORNER PLAN DETAIL
A-501 3/4"=1'-0"

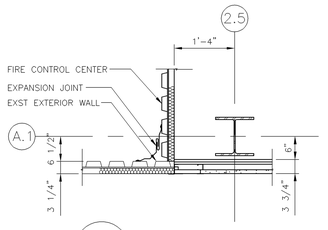

500B CORNER PLAN DETAIL
A-400 3/4"=1'-0"

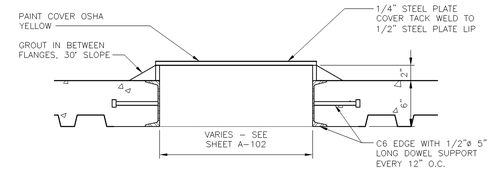

500C SLEEVE DETAIL
A-102 A-503 3/4"=1'-0"

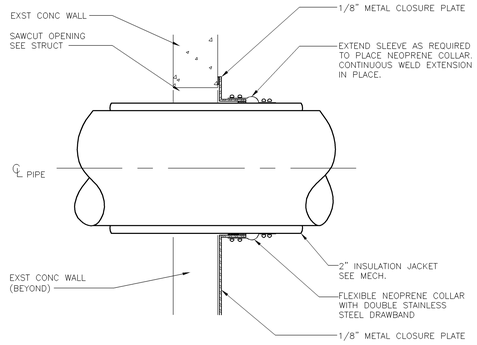

500G PIPE PENETRATION DETAIL
A-500 1 1/2" = 1'-0"

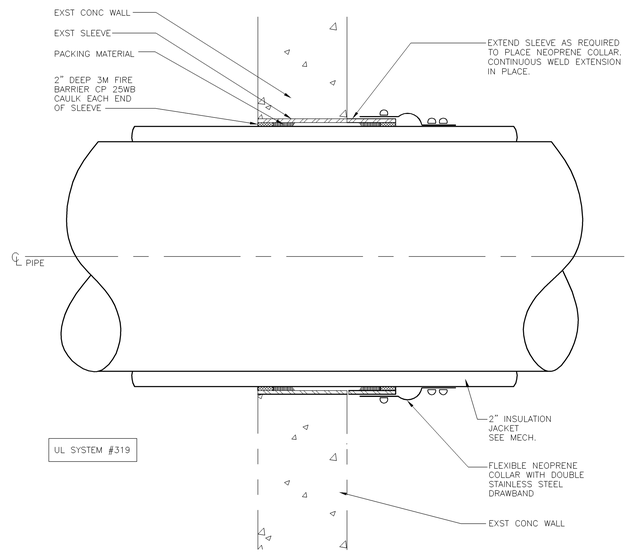

500D PIPE PENETRATION DETAIL
A-300 1 1/2" = 1'-0"

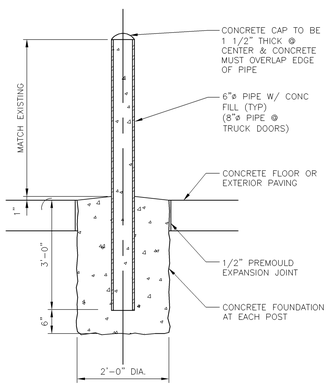

500L TYP. GUARDPOST DETAIL
A-600 3/4" = 1'-0"

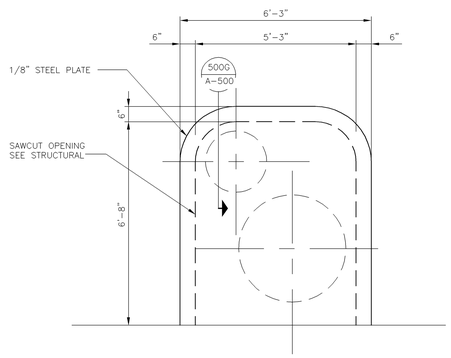

NOTE: SEE STRUCTURAL DETAIL 'E' ON SHEET SC-201 FOR ADDITIONAL DETAILS

500H PIPE PENETRATION DETAIL
A-300 1 1/2" = 1'-0"

This drawing has been prepared solely for the use of Brookhaven National Laboratory and there are no representations of any kind made by Giffels, Partnership to any party with whom Giffels, Partnership has not entered into a contract.

This drawing shall not be used for construction purposes until the seal and signature of the responsible registrant appears on the drawing, and proper permit forms and related fees are transmitted by the Owner, Owner's Agent, or Contractor to the Authority Having Jurisdiction.

JOB NO.	SHEET	NO	REVISION	DATE	DWN.	APP'D.	QA

BROOKHAVEN NATIONAL LABORATORY
UNDER CONTRACT WITH
UNITED STATES DEPARTMENT OF ENERGY
PLANT ENGINEERING DIVISION
UPTON, NEW YORK 11973

Giffels, Partnership
25200 Telegraph Road, Suite 200
Southfield, Michigan 48033 USA
Tel. 248-936-8000
Fax 248-936-8111

Approved By: D O'BEIRNE
Project Manager: G. KAPLAN
Project Engineer/Architect: D C SMITH
Project No.: SF070003

JOB TITLE: CENTRAL CHILLED WATER FACILITY PHASE II		DWG. TITLE: ENLARGED DETAILS	
ILR,GPP,LNI, HEM	DATE	ACCT. NO. SF070003	SHEET OF
SCALE: AS NOTED	DWN. BY DCS / REV'D BY D O'B	JOB NO. 11705	DWG. NO. A–500
ESHQ RISK LEVEL	APP'D. BY D O'BEIRNE	BLDG. NO. 600	

PATH: bimsdatasf\BNL\SF070003\500-deliv\11705-A105.dwg