Date (mmm dd yyyy)	Issued For	Rev.
03-28-2008	TITLE II DESIGN 60% REVIEW SUBMITTAL	D
07-31-2008	TITLE II DESIGN 90% REVIEW SUBMITTAL	E
08-25-2008	TITLE II DESIGN 100% OWNER REVIEW	F
02-19-2009	TITLE II CONSTRUCTION BID ISSUE	0

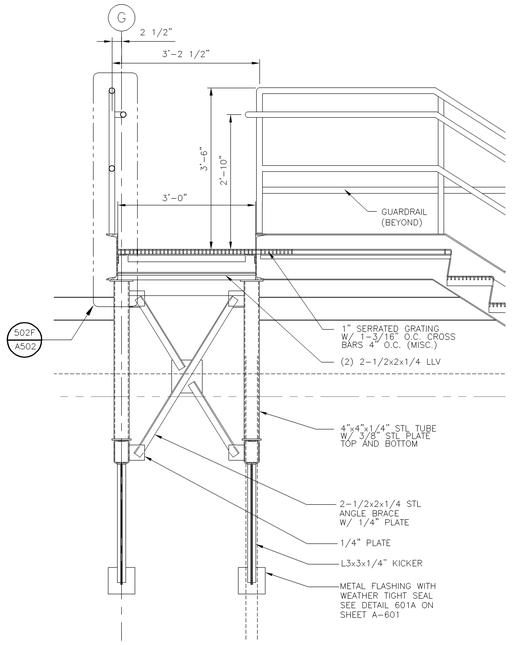

502M STAIR SECTION @ PARAPET
A-502 3/4"=1'-0"

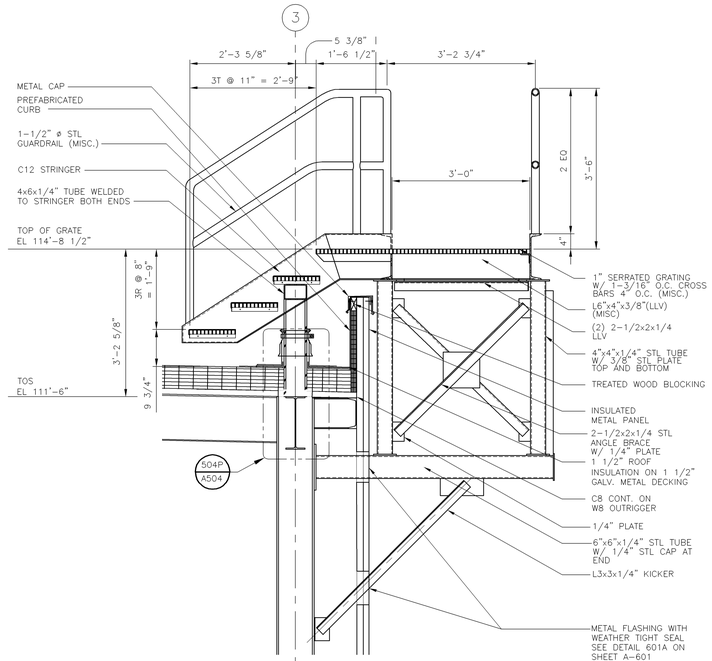

502J STAIR SECTION @ PARAPET
A-502 3/4"=1'-0"

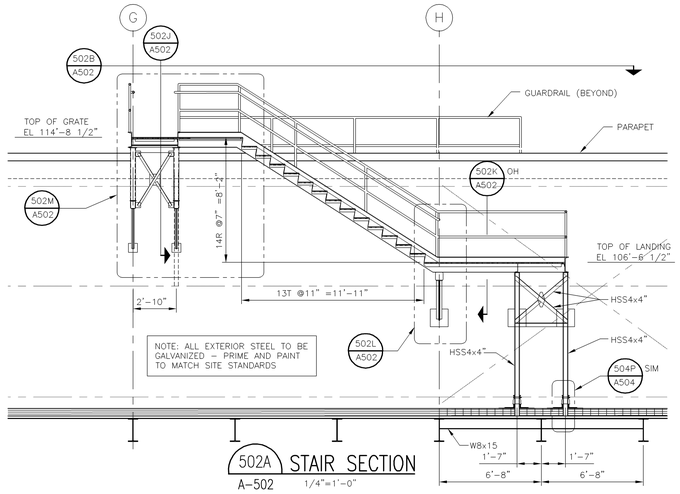

502A STAIR SECTION
A-502 1/4"=1'-0"

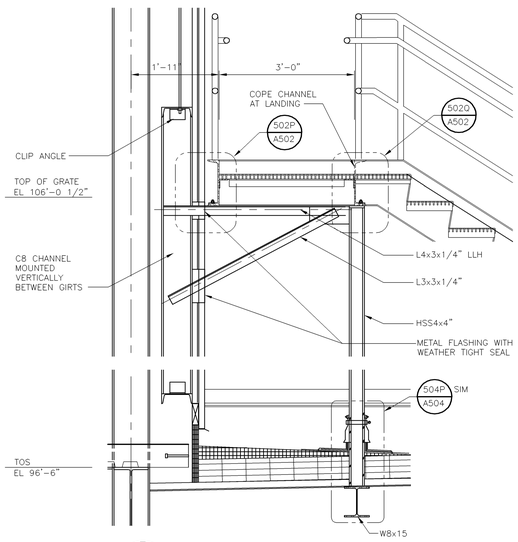

502N STAIR SECTION @ BRACKET
A-502 3/4"=1'-0"

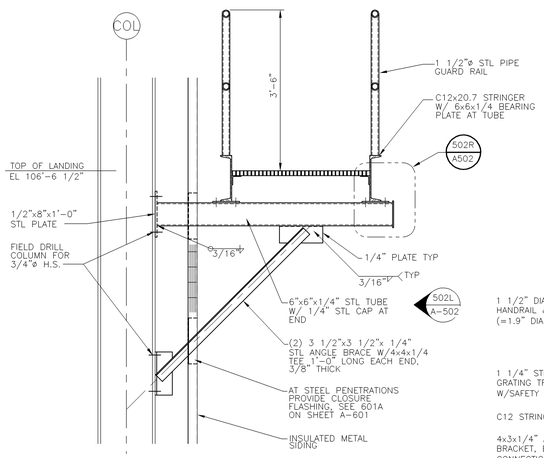

502K STAIR SECTION @ BRACKET
A-502 3/4"=1'-0"

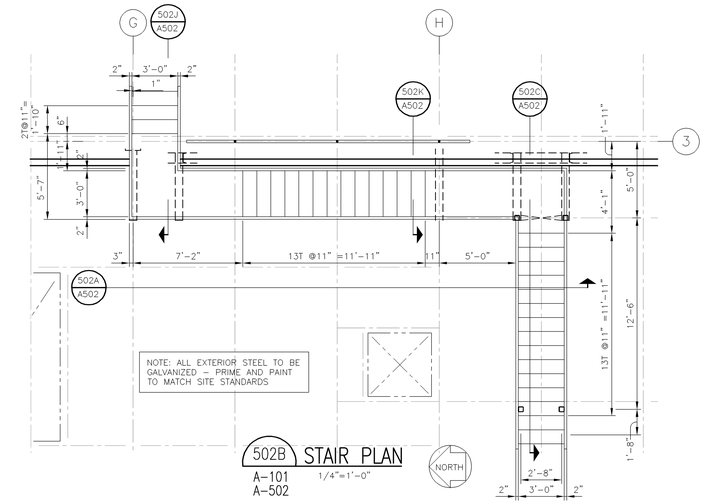

502B STAIR PLAN
A-101
A-502 1/4"=1'-0"

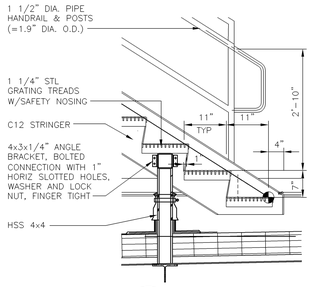

502D STAIR DETAIL
A-502 3/4"=1'-0"

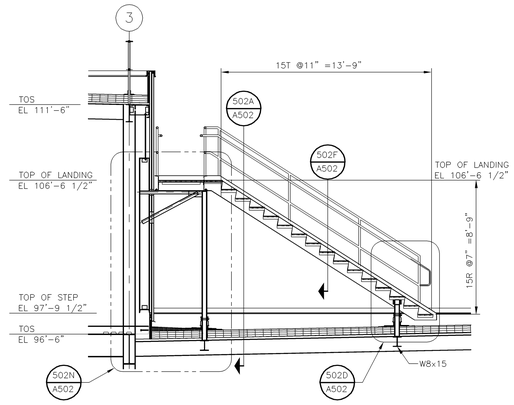

502C STAIR SECTION
A-502 1/4"=1'-0"

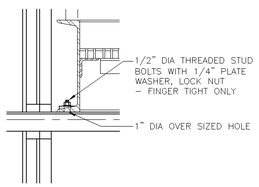

502P CONNECTION DETAIL
A-502 1 1/2"=1'-0"

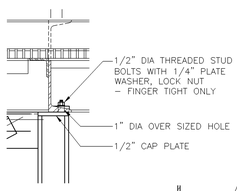

502Q CONNECTION DETAIL
A-502 1 1/2"=1'-0"

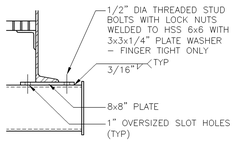

502R CONNECTION DETAIL
A-502 1 1/2"=1'-0"

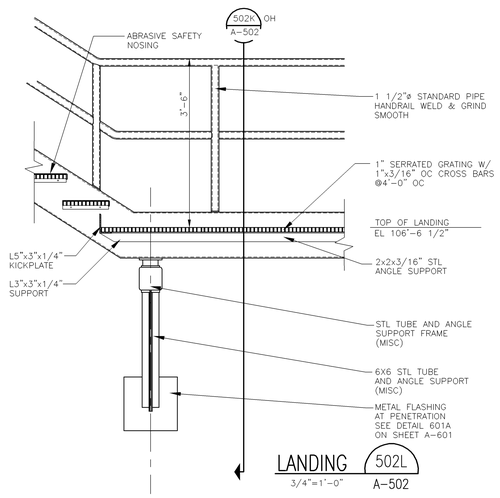

LANDING 502L
3/4"=1'-0" A-502

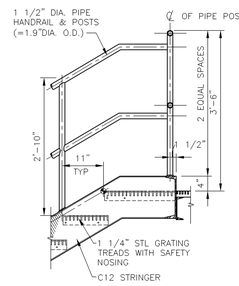

502H STAIR DETAIL
A-502 3/4"=1'-0"

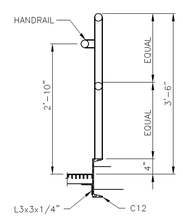

502F GUARD DETAIL
A-502 3/4"=1'-0"

This drawing has been prepared solely for the use of Brookhaven National Laboratory and there are no representations of any kind made by Giffels, Partnership to any party with whom Giffels, Partnership has not entered into a contract.

This drawing shall not be used for construction purposes until the seal and signature of the responsible registrant appears on the drawing, and proper permit forms and related fees are transmitted by the Owner, Owner's Agent, or Contractor to the Authority Having Jurisdiction.

JOB NO.	SHEET	NO	REVISION	DATE	DWN.	APP'D.	QA

BROOKHAVEN NATIONAL LABORATORY

UNDER CONTRACT WITH
UNITED STATES DEPARTMENT OF ENERGY
PLANT ENGINEERING DIVISION
UPTON, NEW YORK 11973

JOB TITLE: CENTRAL CHILLED WATER FACILITY PHASE II

DWG. TITLE: STAIR DETAILS

Giffels, Partnership
25200 Telegraph Road, Suite 200
Southfield, Michigan 48033 USA
Tel. 248-936-8000
Fax 248-936-8111

Approved By: D O'BEIRNE
Project Manager: G. KAPLAN
Project Engineer/Architect: D C SMITH
Project No.: SF070003

ILR,GPP,LN5, HEM	DATE	ACCT. NO.	SHEET OF
SCALE: AS NOTED	DWN. BY: DGS / REV'D BY: D O'B	JOB NO.: 11705	DWG. NO.: A-502
ESHQ RISK LEVEL	APP'D. BY: D O'BEIRNE	BLDG. NO.: 600	
PATH:			