Date (mmm dd yyyy)	Issued For	Rev.
07-31-2008	TITLE II DESIGN 90% REVIEW SUBMITTAL	E
08-25-2008	TITLE II DESIGN 100% OWNER REVIEW	F
02-19-2009	TITLE II CONSTRUCTION BID ISSUE	0

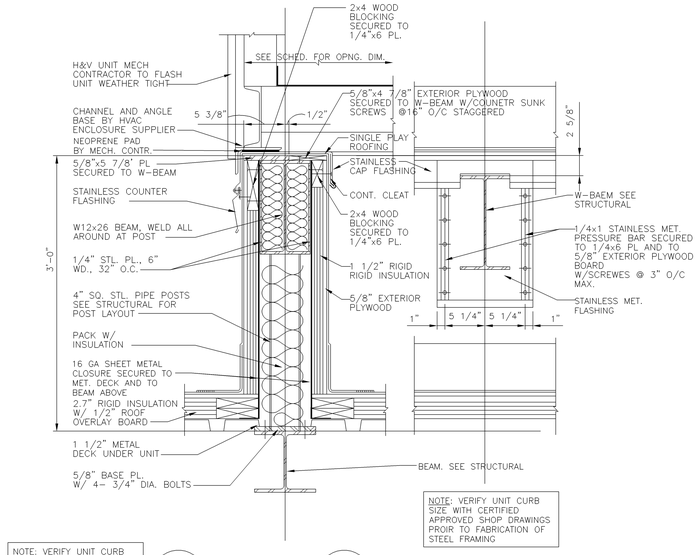

NOTE: VERIFY UNIT CURB SIZE WITH CERTIFIED APPROVED SHOP DRAWINGS PROIR TO FABRICATION OF STEEL FRAMING

NOTE: VERIFY UNIT CURB SIZE WITH CERTIFIED APPROVED SHOP DRAWINGS PROIR TO FABRICATION OF STEEL FRAMING

504M AHU CURB A-101 1 1/2"=1'-0"

504N @ INTERMEDIATE SUPPORT A-504 1 1/2"=1'-0"

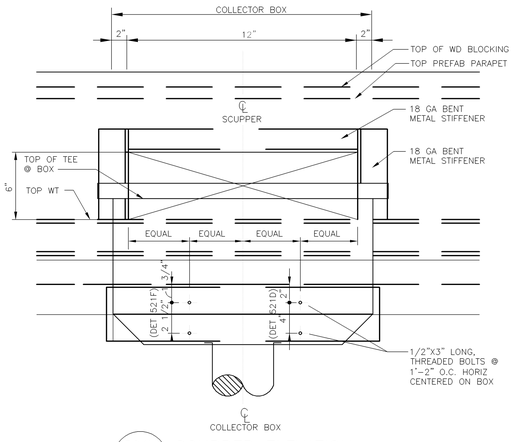

504H SCUPPER ELEVATION A-400, A-504 1 1/2"=1'-0"

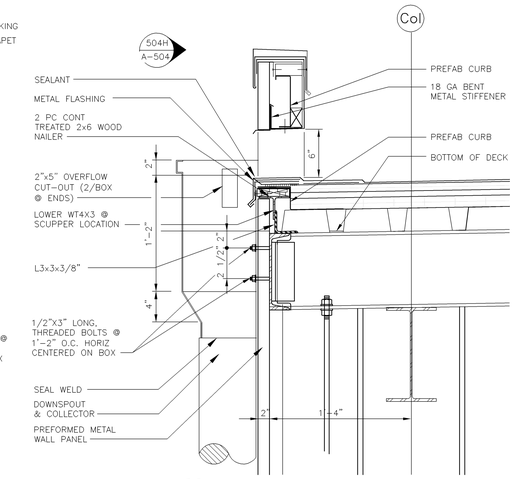

504F SCUPPER SECTION A-400 1 1/2"=1'-0"

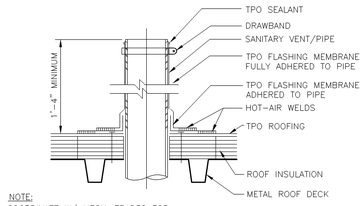

NOTE: COORDINATE W/ MECH. TRADES FOR EXACT SIZE AND LOCATION

504A SANITARY VENT DETAIL A-101 1 1/2"=1'-0"

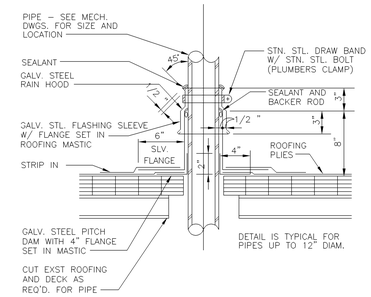

504B TYPICAL PIPE PENETRATION A-101 1 1/2"=1'-0"

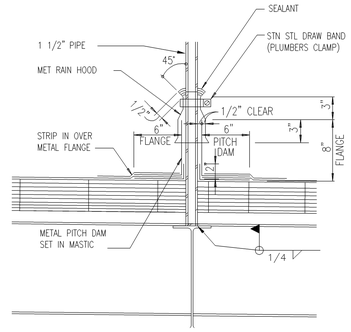

504J HANDRAIL DETAIL PIPE PENETRATION A-302 1 1/2"=1'-0"

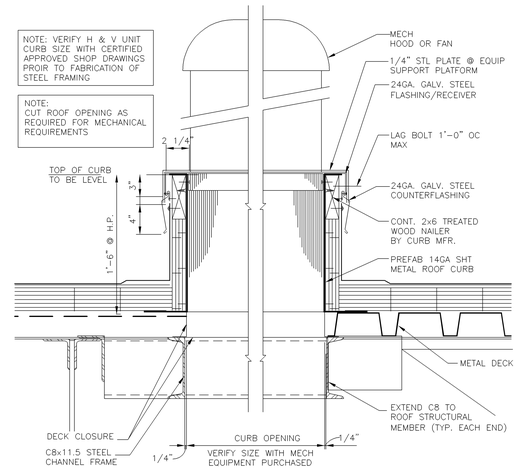

504G TYPICAL CURB SUPPORT DETAIL A-101, 504 1 1/2"=1'-0"

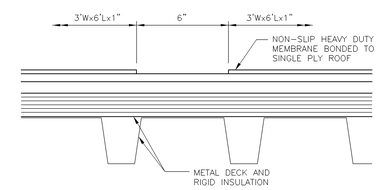

504C ROOF WALKWAY PADS A-101 3"=1'-0"

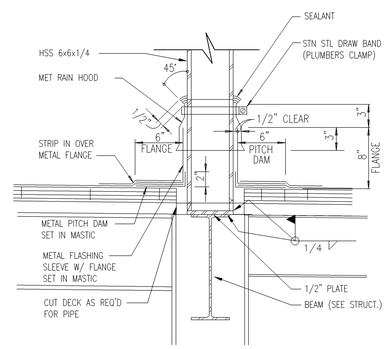

504P TYPICAL SUPPORT PENETRATION DETAIL A-502 1/8" = 1'-0"

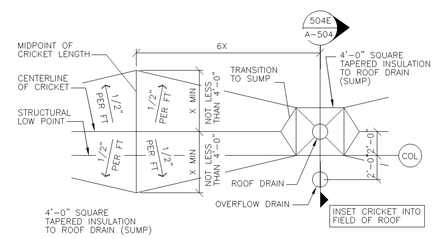

504D ROOF DRAINAGE DETAIL A-101 1 1/2"=1'-0"

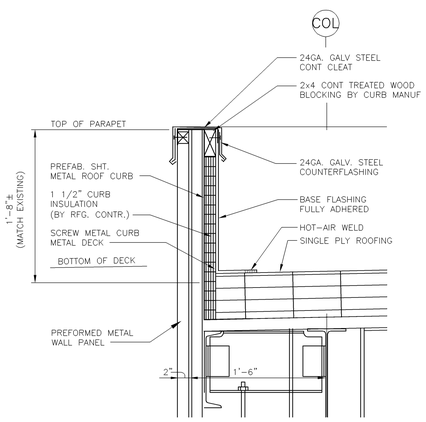

504R TYPICAL PARAPET DETAIL A-302 1/8" = 1'-0"

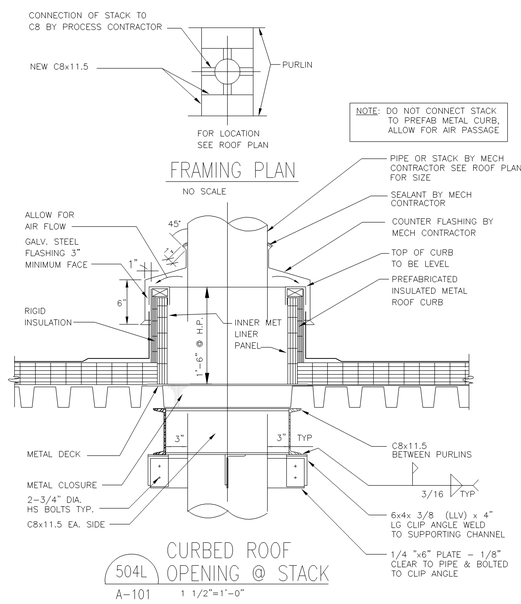

504L CURBED ROOF OPENING @ STACK A-101 1 1/2"=1'-0"

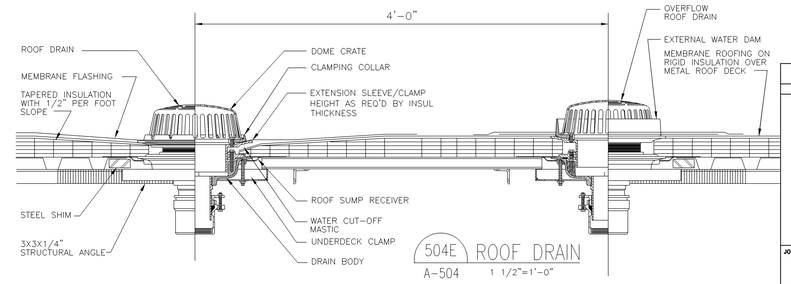

504E ROOF DRAIN A-504 1 1/2"=1'-0"

This drawing has been prepared solely for the use of Brookhaven National Laboratory, and there are no representations of any kind made by Giffels, Partnership to any party with whom Giffels, Partnership has not entered into a contract.

This drawing shall not be used for construction purposes until the seal and signature of the responsible registrant appears on the drawing, and proper permit forms and related fees are transmitted by the Owner, Owner's Agent or Contractor to the Authority Having Jurisdiction.

JOB NO.	SHEET	NO	REVISION	DATE	DWN.	APP'D.	QA

BROOKHAVEN NATIONAL LABORATORY

UNDER CONTRACT WITH
UNITED STATES DEPARTMENT OF ENERGY
PLANT ENGINEERING DIVISION
UPTON, NEW YORK 11973

Giffels, Partnership
25200 Telegraph Road, Suite 200
Southfield, Michigan 48033 USA
Tel. 248-936-6000
Fax 248-936-6111

Approved By: D O'BEIRNE
Project Manager: G. KAPLAN
Project Engineer/Architect: D C SMITH
Project No.: SF070003

JOB TITLE: CENTRAL CHILLED WATER FACILITY PHASE II		DWG. TITLE: ROOF DETAILS	
ILR,GPP,LN6, HEM	DATE: 12-07-07	ACCT. NO.: SF070003	SHEET OF
SCALE: AS NOTED	DWN. BY: DCS / REV'D BY: D O'B	JOB NO.: 11705	DWG. NO.: A-504
ESHQ RISK LEVEL	APP'D. BY: D O'BEIRNE	BLDG. NO.: 600	
PATH:			