| Date (mmm dd yyyy) | Issued For | Rev. |
|---|---|---|
| 12-07-2007 | TITLE II DESIGN 30% REVIEW SUBMITTAL | C |
| 03-28-2008 | TITLE II DESIGN 60% REVIEW SUBMITTAL | D |
| 07-31-2008 | TITLE II DESIGN 90% REVIEW SUBMITTAL | E |
| 08-25-2008 | TITLE II DESIGN 100% OWNER REVIEW | F |
| 10-17-2008 | TITLE II CONSTRUCTION BID ISSUE | 0 |

## FIXTURE SCHEDULE

| FIXTURE TYPE | DESCRIPTION | VOLTAGE | VA | REMARKS |
|---|---|---|---|---|
| FAA (NOTE 2 (TYP)) | 4 FOOT INDUSTRIAL FLUORESCENT WITH THREE F48T8TL841/HO/ALTO LAMPS, SPRING LOADED LAMP SOCKETS, WHITE PORCELAIN REFLECTOR, 10% UPLIGHT, WIRE GUARD, CHANNEL COUPLINGS AND END CAPS. CORD AND PLUG, FAST BLOW FUSE AND RAPID START ELECTRONIC BALLAST (ONE TWO LAMP BALLAST & ONE ONE LAMP BALLAST).<br><br>LITHONIA "AF10" SERIES<br>HUBBELL "CROWN" SERIES<br>COLUMBIA "DYNAMO" SERIES<br>COOPER METALUX "DIM" SERIES | 120 | 98VA<br>59VA | REFER TO MOUNTING DETAIL "501A" THIS SHEET |
| FBB | SAME AS "FAA" EXCEPT TWO LAMP BALLAST FOR TWO OUTER LAMPS AND ONE LAMP BALLAST FOR NIGHT LIGHT INNER LAMP. ALSO, PROVIDE 1100 LUMEN EMERGENCY BATTERY PACK FOR INNER LAMP. | 120 | 98VA<br>59VA | |
| FCC | 4' INDUSTRIAL VAPOR TIGHT FLUORESCENT FIXTURE WITH TWO F28T8/SP41/UMX/ECO LAMPS, FIBERGLASS HOUSING, DR ACRYLIC DIFFUSER, WHITE FINISH, FAST BLOW FUSE, ELECTRONIC BALLAST AND UL APPROVED FOR DAMP LOCATIONS.<br><br>LITHONIA DM SERIES<br>COOPER METALUX VT2 SERIES<br>COLUMBIA LUN SERIES<br>DAY-BRITE | 120 | 65VA | MOUNT SIMILAR TO DETAIL "501A" THIS SHEET |
| FDD | SAME AS "FCC" EXCEPT FOR 277 VOLTS. | | | |
| FEE | SAME AS "FCC" EXCEPT FOR 277 VOLTS AND WITH EMERGENCY BATTERY PACK AND REMOTE TEST SWITCH. | | | |
| FFF | 6 INCH APERTURE RECESSED FLUORESCENT DOWNLIGHT WITH ONE F26DBXT4/SPX41 LAMP (26DTT 41K), CLEAR ALZAK REFLECTOR, PRISMATIC LENS, WHITE TRIM PLATE, FOR MOUNTING IN GYPSUM BOARD CEILING, FUSED ELECTRONIC BALLAST AND UL APPROVED FOR WET LOCATIONS.<br><br>LITHONIA "LGFV" SERIES<br>COLUMBIA PRESCOLITE "CFQ6" SERIES<br>COOPER HALOX SERIES | 120 | 25VA | |
| FGG | 8 INCH APERTURE RECESSED FLUORESCENT DOWNLIGHT WITH TWO F26DBXT4/SPX41 LAMPS (2-26DTT 41K), CLEAR ALZAK REFLECTOR, WHITE BAFFLE, WHITE TRIM RING, FOR MOUNTING IN GYPSUM BOARD CEILING AND FUSED ELECTRONIC BALLAST.<br><br>LITHONIA "AF" SERIES<br>COLUMBIA PRESCOLITE "CFR8" SERIES<br>COOPER HALOX "803" SERIES | 277 | 44VA | |
| FHH | SAME AS TYPE "FGG" EXCEPT WITH EMERGENCY BATTERY PACK AND REMOTE TEST SWITCH. | | | |
| FJJ | 1' X 4' WALL MOUNTED FLUORESCENT FIXTURE WITH UP AND DOWN LIGHT WITH TWO F28T8/SP41/UMX/ECO LAMPS, STEEL CONSTRUCTION WITH WHITE PAINTED FINISH, #12 PATTERN ACRYLIC LENS, FAST BLOW FUSE AND PROGRAMMED RAPID START ELECTRONIC BALLAST.<br><br>LITHONIA "WP" SERIES<br>COLUMBIA "WAL" SERIES<br>COOPER METALUX "BIU" SERIES<br>DAY BRITE "AZTEC" SERIES | 277 | 65VA | IN TOILETS, MOUNT BOTTOM OF FIXTURE 6 INCHES ABOVE MIRROR |
| FKK | 1' X 4' SURFACE MOUNTED WRAPAROUND FLUORESCENT FIXTURE WITH TWO F28T8/SP41/UMX/ECO LAMPS, ACRYLIC PRISMATIC DIFFUSER, STEEL CONSTRUCTION WITH WHITE PAINTED FINISH, FAST BLOW FUSE AND PROGRAMMED RAPID START ELECTRONIC BALLAST.<br><br>LITHONIA "LB" SERIES<br>COLUMBIA "WC" SERIES<br>COOPER METALUX "WS" SERIES<br>DAY-BRITE "CAN" SERIES | 277 | 65VA | |
| FLL | SAME AS TYPE "FKK" EXCEPT WITH EMERGENCY BATTERY PACK AND REMOTE TEST SWITCH. | | | |
| FMM | 2' X 4' HIGH BAY SUSPENDED FLUORESCENT FIXTURE WITH SIX F28T8/SP41/UMX/ECO LAMPS, LOW PROFILE, SUITABLE FOR SINGLE OR DUAL POINT MOUNTING, MEDIUM DISTRIBUTION, STEEL CONSTRUCTION WITH UPLIGHT, WIRE GUARD, HIGH GLOSS WHITE BAKED ENAMEL, 93% OR GREATER REFLECTANCE, HIGH LUMEN FUSED ELECTRONIC BALLAST (GE ULTRAMAX OR APPROVED EQUAL W/1.15 TO 1.2 BALLAST FACTOR).<br><br>GE "E8" SERIES<br>LITHONIA "FSB" SERIES<br>HOLOPHANE "HB" SERIES | 277 | 196VA | MOUNT SIMILAR TO DETAIL 501A ON DRAWING E-501 |
| FNN | SAME AS TYPE "FMM" EXCEPT ONE BALLAST FOR TWO INNER LAMPS (NIGHT LIGHT CIRCUIT) AND ONE BALLAST FOR FOUR OUTER LAMPS AND WITH EMERGENCY BATTERY PACK AND REMOTE TEST SWITCH. | 277 | 68VA<br>131VA | |
| FOO | 4 FOOT INDUSTRIAL FLUORESCENT FIXTURE WITH TWO F28T8/SP41/UMX/ECO LAMPS, SPRING LOADED LAMP SOCKETS WITH PORCELAIN REFLECTOR, 10% UPLIGHT, WIRE GUARD, CHANNEL COUPLINGS AND END CAPS, CORD AND PLUG, FAST BLOW FUSE AND RAPID START ELECTRONIC BALLAST.<br><br>LITHONIA "AF10" SERIES<br>HUBBELL "CROWN" SERIES<br>COLUMBA "DYNAMO" SERIES<br>COOPER METALUX "DIM" SERIES | 277 | 65VA | REFER TO MOUNTING DETAIL "501A" THIS SHEET |
| FPP | SAME AS TYPE "FOO" EXCEPT WITH EMERGENCY BATTERY PACK AND REMOTE TEST SWITCH. | | | |
| HA | FIXTURE FOR BLDG 600C (SHED) DOOR. | 120 | XXVA | MATCH EXISTING AT EXISTING SHED |
| HB | STANCHION MOUNTED FIXTURE WITH 1.50" NPT STANCHION MOUNT BRACKET, 150W HIGH PRESSURE SODIUM LAMP, LONG/NARROW REFRACTOR W/WIRE GUARD, GRAY CAST ALUMINUM HOUSING AND FUSED BALLAST.<br><br>HOLOPHANE CAT No. PETL 15AHP 12 541 SA F1 PETLWGA | 120 | 190VA | MATCH EXISTING AT EXISTING COOLING TOWER EXCEPT DIFFERENT VOLTAGE |

## FIXTURE SCHEDULE (CONTINUED)

| FIXTURE TYPE | DESCRIPTION | VOLTAGE | VA | REMARKS |
|---|---|---|---|---|
| HC | SAME AS TYPE "HB" EXCEPT FOR 277 VOLTS | 277 | 190VA | |
| HD | WALL MOUNTED WALLPACK, 70 WATT HIGH PRESSURE SODIUM LAMP WITH MOGAL BASE, STANDARD OPTICS, DIE CAST ALUMINUM HOUSING BRONZE IN COLOR, BOROSILICATE GLASS REFRACTOR, HID FUSED BALLAST FOR STARTING DOWN TO -30 DEGREE C, PHOTOCONTROL KIT AND UL APPROVED FOR WET LOCATIONS.<br><br>HOLOPHANE CAT No. W4 070HP 27 S Z F1 B | 277 | 95VA | TO MATCH EXISTING BUILDING EXTERIOR FIXTURES |
| HE | 250 WATT HIGH PRESSURE SODIUM POLE MOUNTED FIXTURE, ALUMINUM CANOPY, PRISMATIC GLASS REFLECTOR, GRAY IN COLOR, FUSED BALLAST, WITH 90 DEGREE SHIELD, UL APPROVED FOR WET LOCATIONS AND MOUNTED ON 25 FOOT ROUND TAPERED POLE.<br><br>FIXTURE: HOLOPHANE CRESTWOOD SERIES CAT No. CW3A 250HP 27 GR CA CW3A90<br>POLE: HOLOPHANE CAT No. RTA2570E P4 ND SB | 277 | 300VA | TO MATCH EXISTING ROADWAY LIGHTING FIXTURE AND POLE |
| XAA | EXIT SIGN WITH BATTERY BACK UP, LIGHT EMITTING DIODES, SINGLE FACE WALL MOUNTED WITH 6" HIGH RED LETTERING, DIRECTIONAL ARROWS AS INDICATED ON THE DRAWINGS, WHITE POLYCARBONATE HOUSING WITH ROUND CORNER STYLING, MAINTENANCE FREE NICKEL CADMIUM BATTERY WITH SELF DIAGNOSTICS.<br><br>COOPER SURE-LITES "LPX" SERIES<br>LITHONIA "QUANTUM" SERIES<br>APPROVED EQUAL | 277 | 10VA | MATCH EXISTING IN BUILDING EXCEPT 277 VOLTS |
| XBB | SAME AS TYPE "XAA" EXCEPT PENDENT MOUNTED. | | | |
| XCC | SAME AS TYPE "XAA" EXCEPT PENDENT MOUNTED AND TWO FACES. | | | |

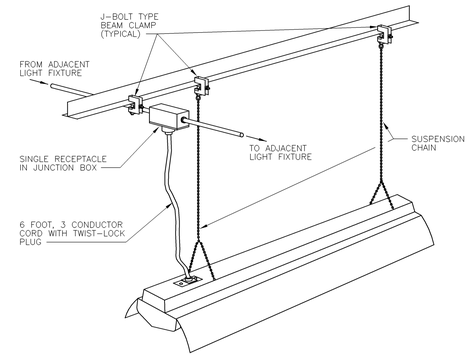


501A / E-501 TYPICAL INDUSTRIAL FLUORESCENT LUMINAIRE SUSPENSION DETAIL

NOT TO SCALE

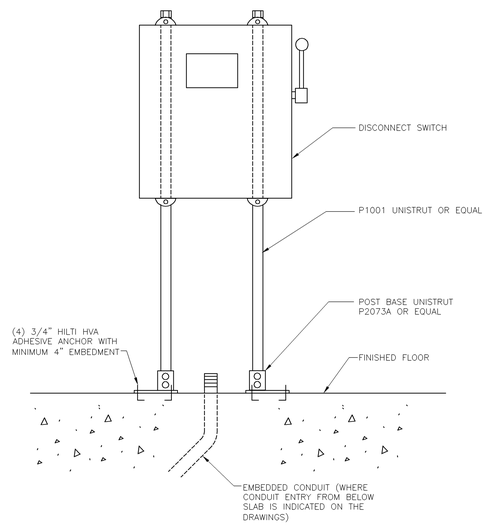


501B / EP-400, EP-401 TYPICAL MOUNTING DETAIL FREE STANDING DISCONNECT SWITCH

NTS

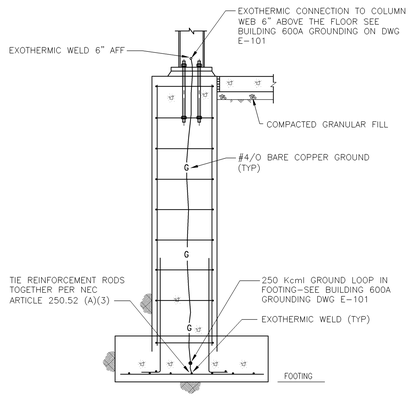


501D / E-101 BUILDING 600A COLUMN GROUNDING DETAIL

NTS

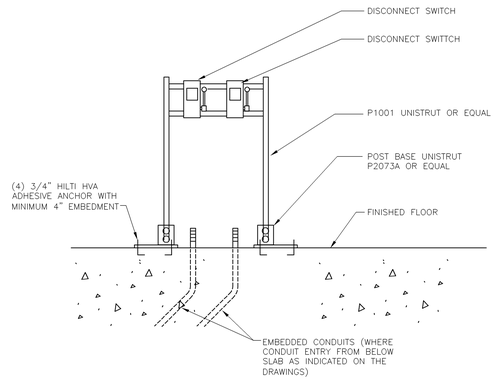


501C / EP-401 TYPICAL MOUNTING DETAIL FREE STANDING DISCONNECT SWITCHES

NTS

NOTES:

1. REFER TO DRAWING E-001 FOR ELECTRICAL ABBREVIATIONS, GENERAL NOTES AND DRAWING LIST AND DRAWING E-002 FOR ELECTRICAL SYMBOLS.
2. ALL FIXTURES SHALL BE U. L. LISTED.


This drawing has been prepared solely for the use of Brookhaven National Laboratory and there are no representations of any kind made by Giffels, Partnership to any party with whom Giffels, Partnership has not entered into a contract.

This drawing shall not be used for construction purposes until the seal and signature of the responsible registrant appears on the drawing, and proper permit forms and related fees are transmitted by the Owner, Owner's Agent or Contractor to the Authority Having Jurisdiction.


| JOB NO. | SHEET | NO | REVISION | DATE | DWN. | APP'D. | DA |
|---|---|---|---|---|---|---|---|
| | | | | | | | |

BROOKHAVEN NATIONAL LABORATORY

UNDER CONTRACT WITH
UNITED STATES DEPARTMENT OF ENERGY
PLANT ENGINEERING DIVISION
UPTON, NEW YORK 11973


Giffels, Partnership
25200 Telegraph Road, Suite 200
Southfield, Michigan 48033 USA
Tel. 248-936-8000
Fax 248-936-8111


Approved By: R BARTOY
Project Manager: G. KAPLAN
Project Engineer/Architect: J BOSSORY
Project No. SF070003

| | | | |
|---|---|---|---|
| JOB TITLE: CENTRAL CHILLED WATER FACILITY PHASE II | | DWG. TITLE: FIXTURE SCHEDULE AND DETAILS | |
| ILR,GPP,LNI, HEM | DATE | ACCT. NO. | SHEET OF |
| SCALE: AS NOTED | DWN. BY: EA / REV'D BY: RB | JOB NO.: 11705 | DWG. NO.: E-501 |
| ESHQ RISK LEVEL | APP'D. BY: R BARTOY | BLDG. NO.: 600 | |
| PATH: | | | |