Date (mmm dd yyyy)	Issued For	Rev.
12-07-2007	TITLE II DESIGN 30% REVIEW SUBMITTAL	C
03-28-2008	TITLE II DESIGN 60% REVIEW SUBMITTAL	D
07-31-2008	TITLE II DESIGN 90% REVIEW SUBMITTAL	E
08-25-2008	TITLE II DESIGN 100% OWNER REVIEW	F
02-19-2009	TITLE II CONSTRUCTION BID ISSUE	0

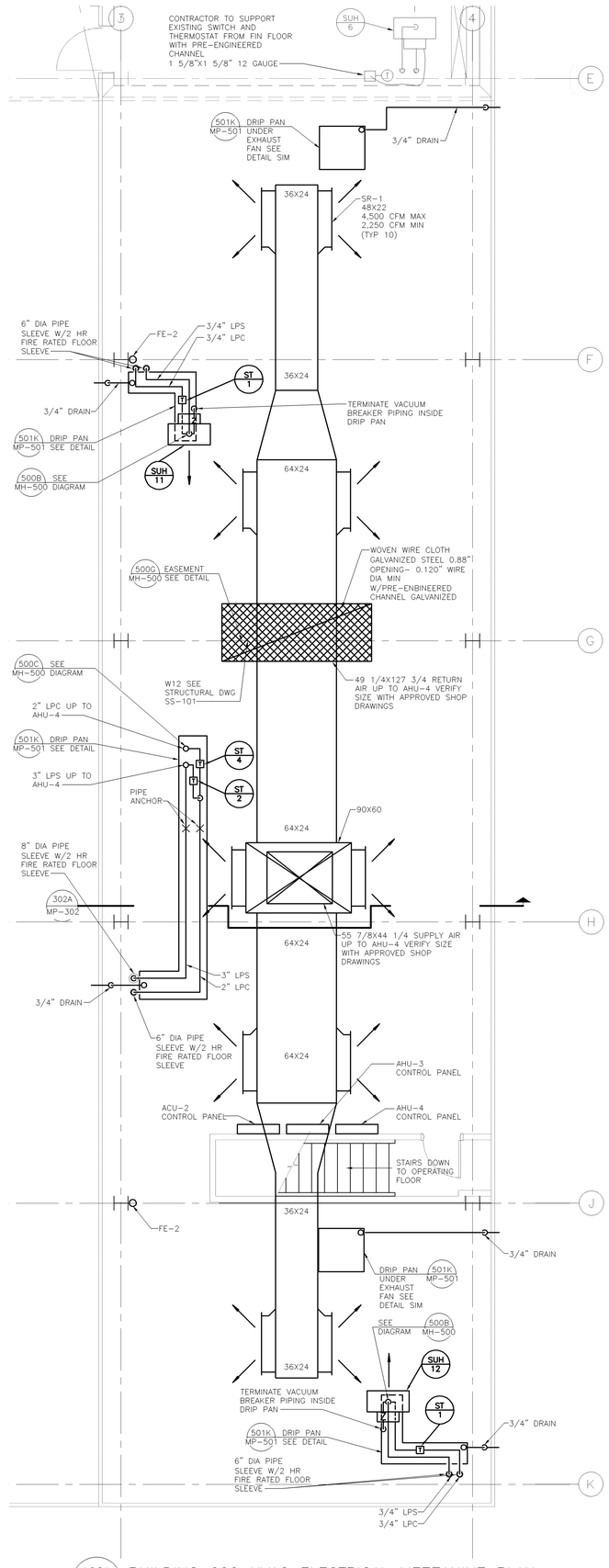

102A BUILDING 600 HVAC ELECTRICAL MEZZANINE PLAN

1/4" = 1'-0" FIN FL EL=97'-0"

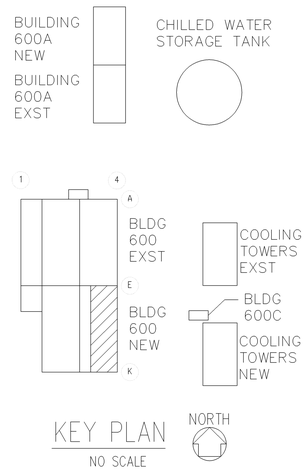

This drawing has been prepared solely for the use of Brookhaven National Laboratory and there are no representations of any kind made by Giffels, Partnership to any party with whom Giffels, Partnership has not entered into a contract.

This drawing shall not be used for construction purposes until the seal and signature of the responsible registrant appears on the drawing, and proper permit forms and related fees are transmitted by the Owner, Owner's Agent or Contractor to the Authority Having Jurisdiction.

LEGEND

EXISTING
NEW
FUTURE

Giffels, Partnership
25200 Telegraph Road, Suite 200
Southfield, Michigan 48033 USA
Tel. 248-936-8000
Fax 248-936-8111

Approved By: B NEWMAN
Project Manager: G. KAPLAN
Project Engineer/Architect: E PIENDEL
Project No. SF070003

JOB NO	SHEET	NO	REVISION	DATE	DWN.	APP'D.	QA
		A					

BROOKHAVEN NATIONAL LABORATORY

UNDER CONTRACT WITH
UNITED STATES DEPARTMENT OF ENERGY
PLANT ENGINEERING DIVISION
UPTON, NEW YORK 11973

JOB TITLE: CENTRAL CHILLED WATER FACILITY PHASE II		DWG. TITLE: HVAC PLAN ELECTRICAL MEZZ	
ILR,GPP,LNI, HEM	DATE	ACCT. NO.	SHEET OF
SCALE 1/4"=1'-0"	DWN. BY EP / REV'D BY BN	JOB NO. 11705	DWG. NO. MH-102
ESHQ RISK LEVEL	APP'D. BY W HARRISON	BLDG. NO. 600	
PATH:			