Date (mmm dd yyyy)	Issued For	Rev.
09-21-2007	TITLE 1 60% REVIEW	A
10-24-2007	TITLE 1 100% COMPLETE	B
12-07-2007	TITLE II DESIGN 30% REVIEW SUBMITTAL	C
03-28-2008	TITLE II DESIGN 60% REVIEW SUBMITTAL	D
07-31-2008	TITLE II DESIGN 90% REVIEW SUBMITTAL	E
08-25-2008	TITLE II DESIGN 100% OWNER REVIEW	F
02-19-2009	TITLE II CONSTRUCTION BID ISSUE	0

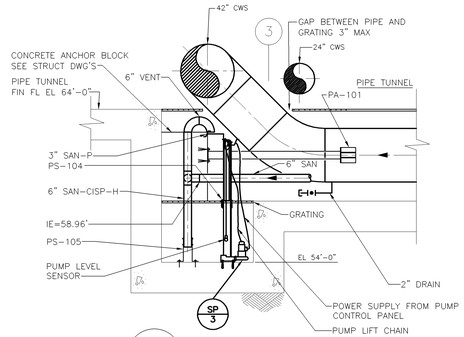

301F SECTION
MU-100 1/4"=1'-0"

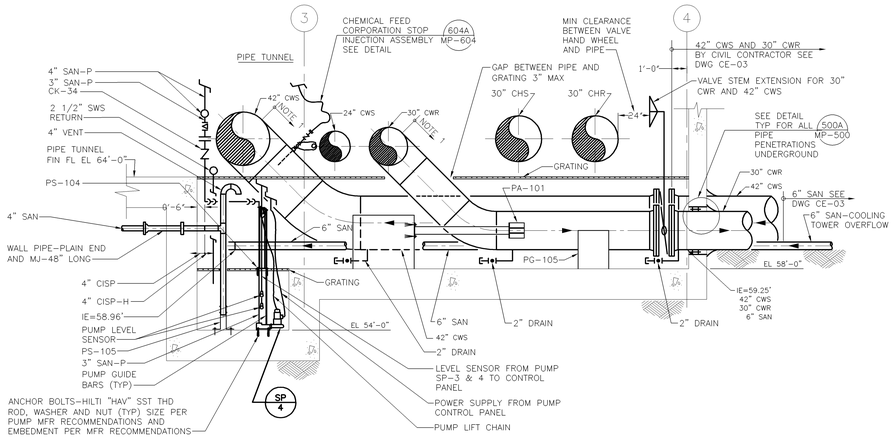

NOTE:
1. SEE DETAIL 501G/MP-501-COVER PIPE WITH JACKETING SEALED WATERTIGHT WITH TYPE IIR BUTYL CAULK.

301E SECTION
MU-100 1/4"=1'-0"

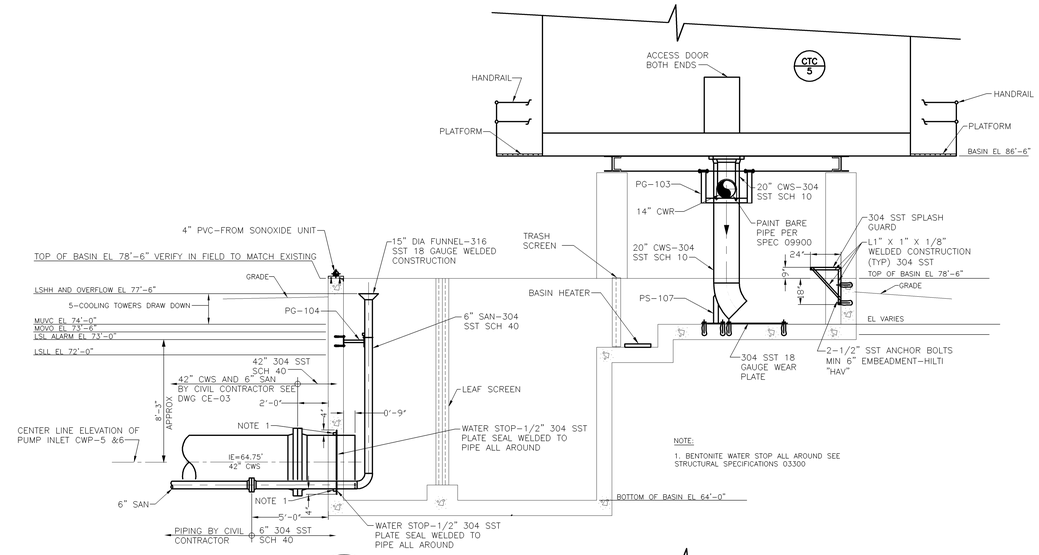

NOTE:
1. BENTONITE WATER STOP ALL AROUND SEE STRUCTURAL SPECIFICATIONS 03300

301A SECTION
MP-105 1/4"=1'-0"

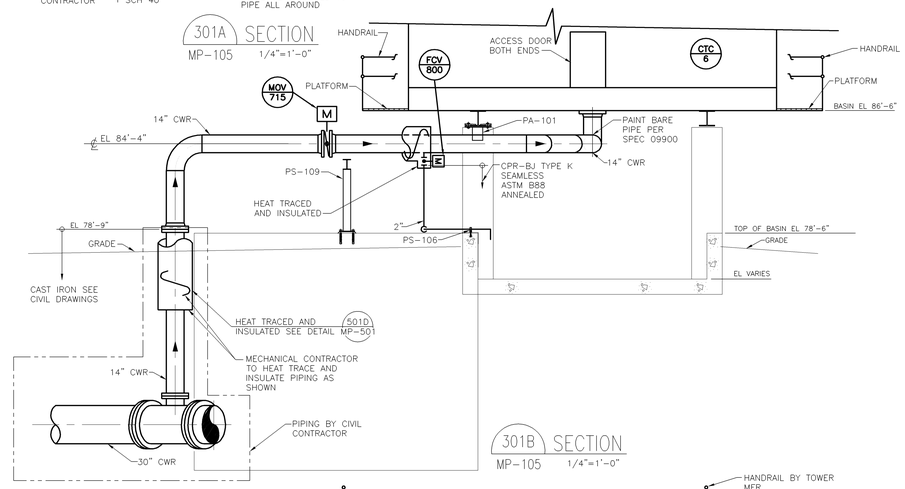

301B SECTION
MP-105 1/4"=1'-0"

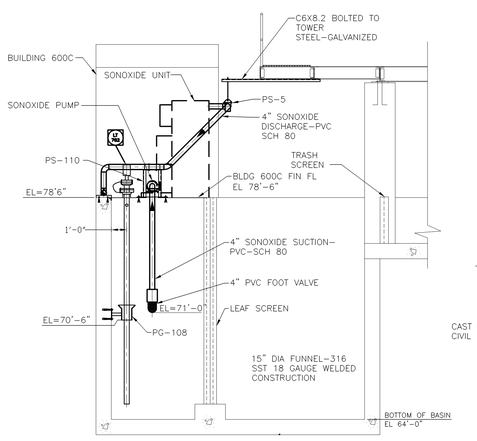

301G SECTION
MP-105 1/4"=1'-0"

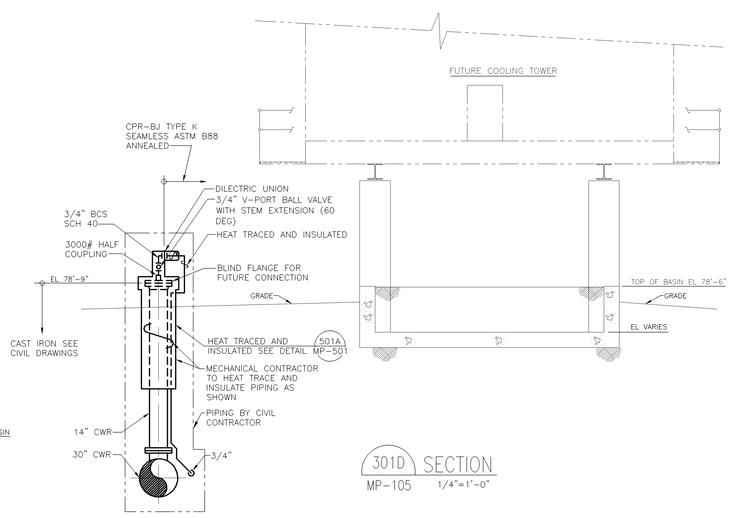

301D SECTION
MP-105 1/4"=1'-0"

GENERAL NOTES:
1. NOT ALL PIPING IS SHOWN IN SECTIONS FOR CLARITY SEE PLAN DRAWINGS FOR ADDITIONAL PIPING.

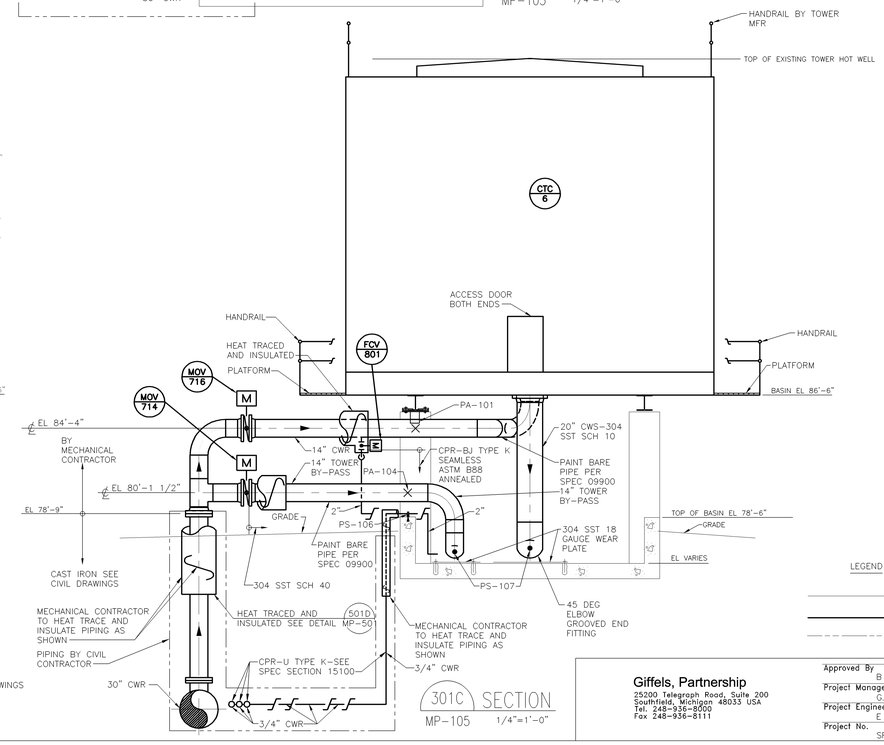

301C SECTION
MP-105 1/4"=1'-0"

LEGEND
EXISTING
NEW
FUTURE

This drawing has been prepared solely for the use of Brookhaven National Laboratory and there are no representations of any kind made by Giffels, Partnership to any party with whom Giffels, Partnership has not entered into a contract.

This drawing shall not be used for construction purposes until the seal and signature of the responsible registrant appears on the drawing, and proper permit forms and related fees are transmitted by the Owner, Owner's Agent or Contractor to the Authority Having Jurisdiction.

JOB NO.	SHEET	NO.	REVISION	DATE	DWN.	APP'D.	QA

BROOKHAVEN NATIONAL LABORATORY
UNDER CONTRACT WITH
UNITED STATES DEPARTMENT OF ENERGY
PLANT ENGINEERING DIVISION
UPTON, NEW YORK 11973

Giffels, Partnership
25200 Telegraph Road, Suite 200
Southfield, Michigan 48033 USA
Tel. 248-936-8000
Fax 248-936-8111

Approved By: B NEWMAN
Project Manager: G. KAPLAN
Project Engineer/Architect: E PIENDEL
Project No.: SF070003

JOB TITLE	DWG. TITLE
CENTRAL CHILLED WATER FACILITY PHASE II	SECTIONS

ILR,GPP,LNI, HEM	DATE		ACCT. NO.	SHEET OF
SCALE 1/4"=1'-0"	DWN. BY EP	REV'D BY BN	JOB NO. 11705	DWG. NO.
ESHQ RISK LEVEL	APP'D. BY W HARRISON		BLDG. NO. 600	MP-301
PATH:				